CENWS-OD-TS-DMMO

MEMORANDUM FOR: RECORD November 4, 2010

SUBJECT: DETERMINATION REGARDING THE SUITABILITY OF PROPOSED DREDGED MATERIAL FROM BELLINGHAM COLD STORAGE, BELLINGHAM, WHATCOM COUNTY, FOR UNCONFINED OPEN-WATER DISPOSAL AT THE ELLIOTT BAY NONDISPERSIVE SITE.

1. Introduction. This memorandum reflects the consensus determination of the Dredged Material Management Program (DMMP) agencies (U.S. Army Corps of Engineers, Washington Departments of Ecology and Natural Resources, and the Environmental Protection Agency) regarding the suitability of 6,660 cubic yards (cy) of dredged material from Bellingham Cold Storage for disposal at the Elliott Bay nondispersive open-water site.

2. Background. Bellingham Cold Storage is located in Squalicum Waterway, Bellingham (see Figures 1 and 2). Sediment characterization of the berthing area for dredging purposes has been performed in conjunction with the adjacent federal navigation channel several times since 1991 (Landau, 2010a). The most recent sediment characterization occurred in 2000 (DMMP, 2000) and the results indicated that dredged material from the Bellingham Cold Storage berthing area was suitable for open-water disposal. However, prior to the current dredged material characterization event, dioxin testing had not been required for this project.

3. Project Summary. Table 1 includes project summary and tracking information.

Table 1. Project Summary

Project ranking	Moderate
Proposed dredging volume	6,660 cubic yards
Proposed dredging depth	-29 feet MLLW plus 1 foot overdepth
Sampling and analysis plan (SAP) received	July 13, 2010
SAP approved	July 20, 2010
Sampling dates	July 21-22, 2010
Draft data report received	October 12, 2010
DMMP comments provided on draft report	October 19, 2010
Final data report received	October 27, 2010
DAIS Tracking number	BELCS-1-A-F-300
USACE Permit Application Number	JARPA not yet received
Recency Determination (moderate rank = 5-7 years)	July 2015 – July 2017

4. Project Ranking and Sampling Requirements. Squalicum Waterway (with the exception of the head of the waterway) has been ranked “moderate” by the DMMP agencies based on the results from past projects. Since Bellingham Cold Storage is not situated at the head of the waterway, a moderate rank was applied for this characterization event. In a moderate-ranked area the number

of samples and analyses are calculated using the following guidelines (DMMP, 2008a):

- Maximum volume of sediment represented by each field sample = 4,000 cubic yards
- Maximum volume of sediment represented by each analysis in the upper 4-feet of the dredging prism (surface sediment) = 16,000 cubic yards

For this project, all dredged material was considered surface sediment. Based on the guidelines, the proposed dredging volume of 6,660 cy required a minimum of two field samples and a single DMMU. In order to provide better spatial coverage and resolution, the dredging area was divided into two DMMUs (BCS-1 and BCS-2), each represented by a composite of sediment from three core samples (see Figure 3). The volumes for BCS-1 and BCS-2 are 3,190 cy and 3,470 cy respectively.

5. Sampling. Sampling took place July 21-22, 2010 using a vibracore sampler. Table 2 includes the coordinates of the sampling locations. Table 3 provides the core recovery data and compositing scheme. All work took place in compliance with the approved sampling plan. No problems were encountered during sampling.

6. Chemical Analysis. The approved analysis plan was followed and quality control guidelines specified by DMMP were generally met. The sediment conventional and chemistry results can be found in Table 4. The grain-size data show that the proposed dredged material is predominantly silt, with a fines fraction of 95.5% and 67.1% respectively for BCS-1 and BCS-2. The total organic carbon concentration (TOC) was 0.8% for BCS-1 and 2.1% for BCS-2. The chemical results indicated that there were no detected exceedances of screening levels for the standard DMMP chemicals of concern or tributyltin (TBT). However, while undetected, the reporting limit for selenium - analyzed with EPA method 6010 - exceeded the bioaccumulation trigger (BT) for both DMMUs. The DMMP agencies required archived sediment to be analyzed and the reporting limits for selenium – this time analyzed with EPA method 6020 - dropped below the BT (there is no SL for this metal). Because all chemicals were below screening levels and bioaccumulation triggers, biological testing was not required.

   Dioxins were also analyzed, resulting in a concentration of 1.7 parts per trillion (pptr) toxicity equivalents (TEQ, with undetects = ½ estimated detection limit) for BCS-1. BCS-2 was analyzed three times, as two field replicates and also by the lab as a lab duplicate, resulting in concentrations of 12.6, 9.1 and 10.1 pptr. Because all three samples came from the same homogenate, an average of these three values (i.e. 10.6 pptr) was used in determining the suitability of BCS-2 (see section 8 below) for open-water disposal. The dioxin data underwent Stage 4 manual validation by EcoChem.

7. Sediment Exposed by Dredging. Sediment exposed by dredging must either meet the State of Washington Sediment Quality Standards (SQS) (Ecology, 1995) or the State's antidegradation standard (DMMP, 2008b). For this project, the two-foot layer of material underlying the proposed dredged material (the z-samples) was sampled and analyzed. Table 5 shows that there were no detected exceedances of SQS. However, while undetected, the reporting limit for hexachlorobenzene exceeded SQS for both DMMUs. The DMMP agencies believe the probability that this chemical is actually present at concentrations above SQS is low. Therefore, the reporting-limit exceedance was deemed insignificant and the agencies determined that the project is in

compliance with the State of Washington anti-degradation policy with respect to standard chemicals of concern.

For dioxin, the z-sample concentrations for BCS-1 and BCS-2 were 2.9 and 5.6 pptr TEQ respectively. While the z-sample concentration for BCS-1 was higher than that found in the BCS-1 dredged material (1.7 pptr), the difference between these two results is well within the analytical variability seen for the replicates analyzed for BCS-2. The z-sample concentration for BCS-2 was lower than that found in the BCS-2 dredged material (mean = 10.6 pptr). Therefore, the DMMP agencies determined that the project is in compliance with the State of Washington anti-degradation policy with respect to dioxin.

8. Suitability Determination. This memorandum documents the evaluation of the suitability of sediment proposed for dredging from Bellingham Cold Storage for open-water disposal. The approved sampling and analysis plan was followed and the data gathered were deemed sufficient and acceptable for regulatory decision-making under the DMMP program.

There were no SL exceedances for standard DMMP chemicals of concern or TBT. Therefore, with respect to these chemicals, the dredged material is suitable for open-water disposal. With regard to dioxin, in 2007 the DMMP agencies formulated interim disposal guidelines for each of the nondispersive disposal sites in Puget Sound. The interim guidelines include a maximum concentration for each site. Any DMMU with a concentration above this maximum value is considered unsuitable for open-water disposal. The interim guidelines also include a mean concentration for each site. The mean concentration of all DMMUs proposed for disposal from a project must be less than the site mean. The interim guidelines are provided in Table 6.

Table 6 – DMMP Interim Dioxin Guidelines (pptr TEQ)

Disposal Site	Mean	Maximum
Port Gardner	4.1	5.2
Anderson Ketron	3.6	6.8
Bellingham Bay	6.9	10.5
Elliott Bay	8.7	12.2
Commencement Bay	2.4	5.2

DMMU BCS-1 – by itself – is eligible for disposal at any of the DMMP disposal sites. However, BCS-2 exceeds the maximum allowable concentration at all sites except Elliott Bay (12.2 pptr TEQ). To be taken to the Elliott Bay site, the volume-weighted average for the project must be below the Elliott Bay site mean of 8.7 pptr TEQ. The volume-weighted average of BCS-1 and BCS-2 is 6.3 pptr. Therefore, taken together, the Bellingham Cold Storage dredged material is eligible for disposal at the Elliott Bay site. If disposed at the Elliott Bay site, BCS-2 must be dredged first and BCS-1 second.

In summary, based on the results of the previously described testing, the DMMP agencies conclude that all 6,660 cubic yards from the Bellingham Cold Storage project are suitable for open-water disposal at the Elliott Bay non-dispersive site. If only BCS-1 is disposed of in open water, it may be taken to any of the DMMP disposal sites.

This suitability determination does ***not*** constitute final agency approval of the project. During the public comment period that follows a public notice, the resource agencies will provide input on the overall project. A final decision will be made after full consideration of agency input, and after an alternatives analysis is done under section 404(b)(1) of the Clean Water Act.

A pre-dredge meeting with DNR, Ecology and the Corps of Engineers is required at least 7 days prior to dredging. A dredging quality control plan must be developed and submitted to the Regulatory Branch of the Seattle District Corps of Engineers at least 7 days prior to the pre-dredge meeting. A DNR site use authorization must also be acquired. Disposal at the Elliott Bay site must be by bottom-dump barge.

9. References.

DMMP, 2000. *Determination on the Suitability of Proposed Federal and Non-Federal Operation and Maintenance Dredged Material from Squalicum Waterway, Bellingham Bay, Puget Sound (Public Notice CENWS-OD-TS-NS-9) Evaluated Under Section 404 of the Clean Water Act (CWA) for Open-Water Disposal at the Bellingham Bay Non-Dispersive Disposal Site, Rosario Strait Dispersive Disposal Site, or at a Beneficial Use Site.* Prepared by the Seattle District Dredged Material Management Office for the Dredged Material Management Program, July 2000.

DMMP, 2008a. *Dredged Material Evaluation and Disposal Procedures (Users Manual)*. Prepared by the Seattle District Dredged Material Management Office for the Dredged Material Management Program, July 2008.

DMMP, 2008b. *Quality of Post-Dredge Sediment Surfaces (Updated).* A Clarification Paper Prepared by David Fox (USACE), Erika Hoffman (EPA) and Tom Gries (Ecology) for the Dredged Material Management Program, June 2008.

Ecology, 1995. *Sediment Management Standards – Chapter 173-204 WAC*. Washington State Department of Ecology, December 1995.

Landau, 2010a. *Sampling and Analysis Plan, Marine Sediment Characterization, Squalicum Creek Waterway Berthing Area, Bellingham Cold Storage, Bellingham, Washington.* Prepared by Landau Associates for Bellingham Cold Storage, July 2010.

Landau, 2010b. *Marine Sediment Characterization Report, Squalicum Creek Waterway Berthing Area, Bellingham Cold Storage, Bellingham, Washington.* Prepared by Landau Associates for Bellingham Cold Storage, October 2010.

10. Agency Signatures.

Concur:

11/4/10 David Fox
Date David Fox - Seattle District Corps of Engineers

11/4/10 Erika Hoffman
Date Erika Hoffman - Environmental Protection Agency

11/04/2010 Laura Inouye
Date Laura Inouye, Ph.D. - Washington Department of Ecology

11-04-2010 David Vagt
Date David Vagt - Washington Department of Natural Resources

Copies furnished:

DMMP signatories
Randel Perry – Seattle District Regulatory
Dave Pischer – Landau Associates
Jose Roques – Bellingham Cold Storage

Map from DeLorme Street Atlas USA 2002

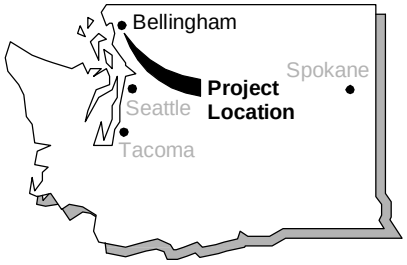

0 2000 4000

Approximate Scale in Feet

LANDAU ASSOCIATES, INC. | V:\002\006\010.011\Figure 1.dwg (A) "Figure 1" 7/12/2010

LANDAU ASSOCIATES

Bellingham Cold Storage Bellingham, Washington	**Vicinity Map**	Figure 1

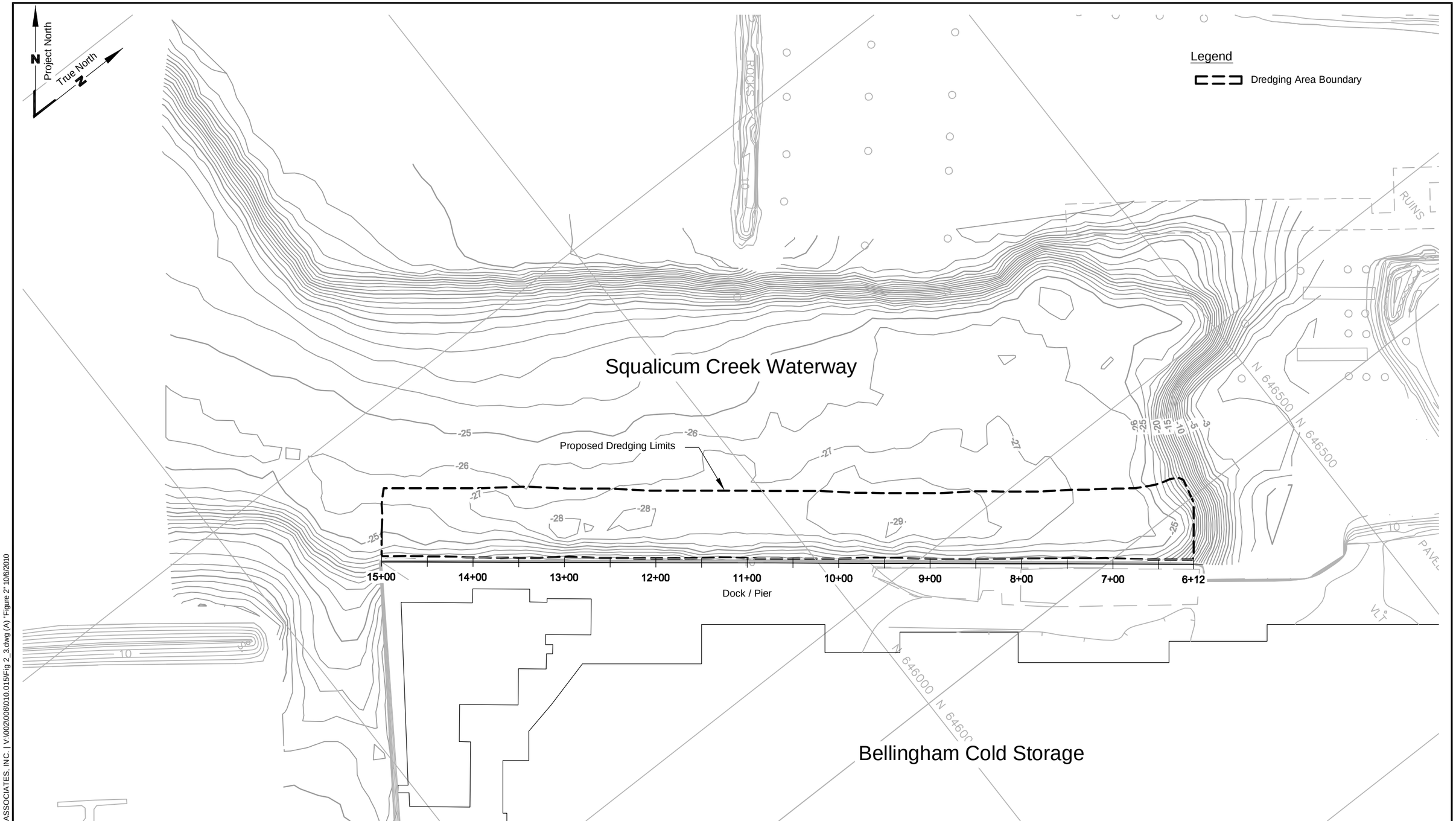

Notes

1. Black and white reproduction of this color original may reduce its effectiveness and lead to incorrect interpretation.

0 60 120
Scale in Feet

Basemap Source: Blue Water Engineering Services 2010

Bellingham Cold Storage Bellingham, Washington	**Site Plan**	Figure 2

LANDAU ASSOCIATES

LANDAU ASSOCIATES, INC. | V:\002\006\010.015\Fig 2_3.dwg (A) "Figure 2" 10/6/2010

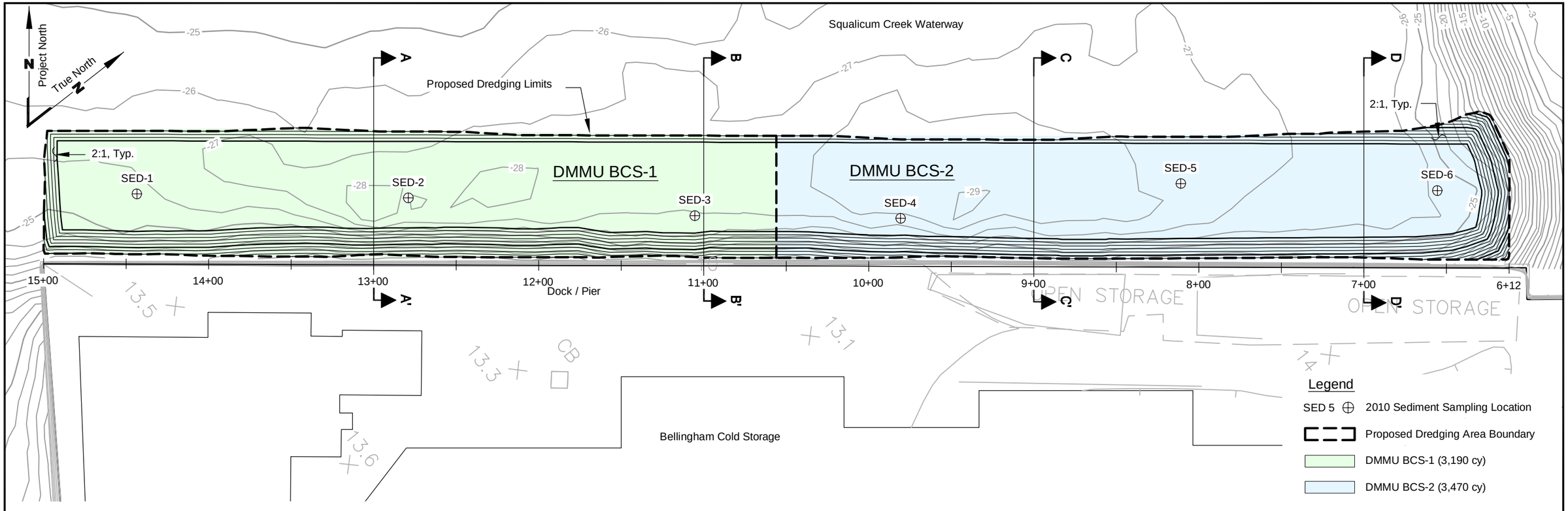

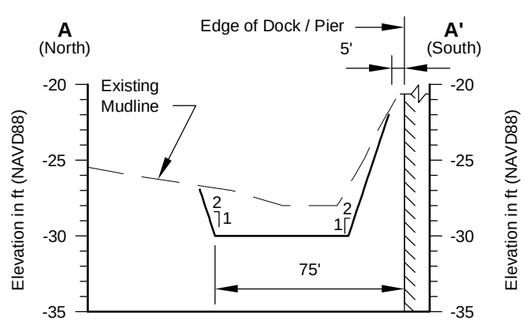

Cross Section Station 13+00

Horizontal Scale in Feet: 1"=60'
Vertical Scale in Feet: 1"=10'

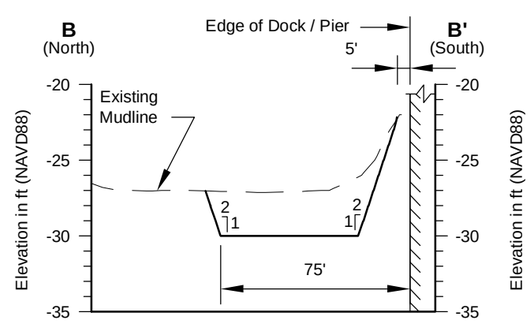

Cross Section Station 11+00

Horizontal Scale in Feet: 1"=60'
Vertical Scale in Feet: 1"=10'

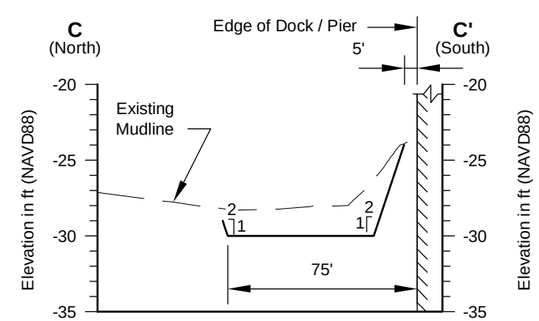

Cross Section Station 9+00

Horizontal Scale in Feet: 1"=60'
Vertical Scale in Feet: 1"=10'

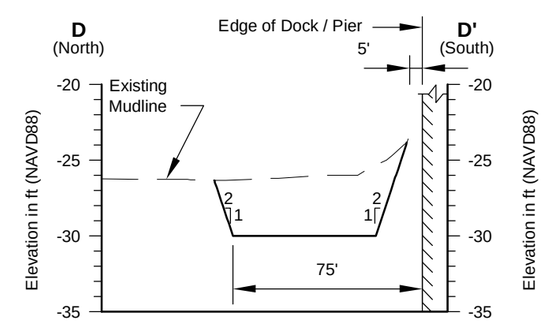

Cross Section Station 7+00

Horizontal Scale in Feet: 1"=60'
Vertical Scale in Feet: 1"=10'

Notes

1. Black and white reproduction of this color original may reduce its effectiveness and lead to incorrect interpretation.

0 60 120
Scale in Feet

Basemap Source: Blue Water Engineering Services 2010

LANDAU ASSOCIATES

Bellingham Cold Storage Bellingham, Washington	**Sediment Sampling Locations and Conceptual Dredging Plan**	Figure **3**

LANDAU ASSOCIATES, INC. | V:\0021\006\010.015\Fig 2_3.dwg (A) "Figure 3" 10/27/2010

TABLE 2 (from Landau, 2010b)
SEDIMENT SAMPLE LOCATION COORDINATES
BELLINGHAM COLD STORAGE
BELLINGHAM, WASHINGTON

July 2010 Sampling Locations

Sampling Station Number	Sample Location	
	Latitude	Longitude
SED-1	48.757971	122.511458
SED-2	48.758327	122.511041
SED-3	48.758691	122.510574
SED-4	48.758962	122.510259
SED-5	48.759369	122.509907
SED-6	48.759703	122.509507

TABLE 3 (from Landau, 2010b)
SEDIMENT CORE RECOVERY AND COMPOSITING
BELLINGHAM COLD STORAGE
BELLINGHAM, WASHINGTON

Sediment Core	Composite	Core Penetration Depth (ft)	Recovered Core Length (ft)	Percent of Penetration Depth Recovered	Mudline Elevation (ft MLLW)	Planned Sample Interval (ft MLLW)	Target Sample Depth (ft)	Adjusted Sample Depth (ft) (a)	Portion of Core Collected (ft)	Percent of Target Sample Depth Interval Recovered
SED-1		**6.6**	**5**	**76 (b)**	**-26.7**					
A-Layer						-26.7 to -30	0 - 3.3	0 - 2.5	0 - 2.5	100 (b)
Z-Layer						-30 to -32	3.3 - 5.3	2.5 - 4.0	2.5 - 4.0	100 (b)
Z+1 Layer						-32 to -33	5.3 - 6.3	4.0 - 4.8	4.0 - 4.8	100 (b)
SED-2		**6.6**	**5.5**	**83 (b)**	**-28.4**					
A-Layer	**BCS-1**					-28.4 to -30	0 - 1.6	0 - 1.3	0 - 1.3	100 (b)
Z-Layer						-30 to -32	1.6 - 3.6	1.3 - 3.0	1.3 - 3.0	100 (b)
Z+1 Layer						-32 to -33	3.6 - 4.6	3.0 - 3.8	3.0 - 3.8	100 (b)
SED-3		**6.6**	**5.4**	**82 (c)**	**-27.5**					
A-Layer						-27.5 to -30	0 - 2.5	NA	0 - 2.5	100
Z-Layer						-30 to -32	2.5 - 4.5	NA	2.5 - 4.5	100
Z+1 Layer						-32 to -33	4.5 - 5.5	NA	4.5 - 5.4	90 (c)
SED-4		**6.6**	**5.0**	**76 (c)**	**-28.1**					
A-Layer						-28.1 to -30	0 - 1.9	NA	0 - 1.9	100
Z-Layer						-30 to -32	1.9 - 3.9	NA	1.9 - 3.9	100
Z+1 Layer						-32 to -33	3.9 - 4.9	NA	3.9 - 4.9	100
SED-5		**6.6**	**5.0**	**76 (c)**	**-28.0**					
A-Layer	**BCS-2**					-28 to -30	0 - 2.0	NA	0 - 2.0	100
Z-Layer						-30 to -32	2.0 - 4.0	NA	2.0 - 4.0	100
Z+1 Layer						-32 to -33	4.0 - 5.0	NA	4.0 - 5.0	100
SED-6		**6.5**	**3.6**	**60 (b)**	**-26.2**					
A-Layer						-26.2 to -30	0 - 3.8	0 - 1.9	0 - 1.9	100 (d)
Z-Layer						-30 to -32	3.8 - 5.8	1.9 - 2.9	1.9 - 2.9	100 (d)
Z+1 Layer						-32 to -33	5.8 - 6.8	2.9 - 3.8	2.9 - 3.6 (e)	70 (e)

NA = No adjustment necessary.
(a) For cores SED-1, SED-2, and SED-6, sample depths were adjusted to account for compression.
(b) No loss of sediment. Shorter sediment core length was determined to be a result of compression based on field observations.
(c) Field observations indicated that the lower portion of the sediment core was not recovered.
(d) At SED-6, the upper 2.9 ft of the core was very soft clayey silt and was considered to be approximately 50% compressed based on field observations.
(e) At SED-6, the lower portion of the core was hard silty clay, and only 0.7 ft of the target depth interval was retrieved due to core tube refusal in the hard silty clay.

TABLE 4 (from Landau, 2010b)
A-LAYER SEDIMENT SAMPLE ANALYTICAL RESULTS - DRY WEIGHT BASIS
BELLINGHAM COLD STORAGE
BELLINGHAM, WASHINGTON

	DMMP Criteria (m)		DMMU BCS-1		DMMU BCS-2			
						FIELD DUP of BCS-CMP2A	LAB DUP of BCS-CMP3A	
			BCS-CMP1A	BCS-SED1A	BCS-CMP2A	BCS-CMP3A	BCS-CMP3A DUP	BCS-SED4A
			RF79J/RG05A/	RF79A	RF79W/RG05C/	RF79Z/		RF79M
	Screening	Bioaccumulation	G1040-18-1		G1040-18-3	G1040-18-7	G1040-18-8B	
	Level	Trigger	7/22/2010	7/22/2010	7/22/2010	7/22/2010	7/22/2010	7/22/2010
TOTAL METALS (mg/kg-dry wt)								
Method SW6010B/7471A								
Antimony	150	---	9 U		9 UJ	9 U		
Arsenic	57	507.1	9 U		9 U	9 U		
Cadmium	5.1	11.3	**0.8**		**0.7**	**0.8**		
Chromium	---	267	**76.2**		**63.8**	**68.4**		
Copper	390	1,027	**46.4**		**45.1**	**49.3**		
Lead	450	975	**8**		**19**	**23**		
Mercury	0.41	1.5	**0.09**		**0.11**	**0.12**		
Nickel	140	370	**128**		**98**	**108**		
Selenium (n)	---	3	**0.9**		**0.8**	**0.9**		
Silver	6.1	6.1	0.5 U		0.5 U	0.6 U		
Zinc	410	2,783	**90**		**101**	**109**		
PORE WATER TBT								
Krone (µg/L)								
Tributyltin Ion	0.15	0.15	0.008 U		0.008 U			
Dibutyltin Ion	---	---	0.012 U		**0.015**			
Butyltin	---	---	**0.014**		**0.016**			
TBT (µg/kg-dry wt)								
Method KRONE89								
Tributyltin Ion	73	73	3.7 U		3.7 U			
Dibutyltin Ion	---	---	5.5 U		5.5 U			
Butyltin	---	---	3.9 U		3.9 UJ			
PAHs Method 8270D (µg/kg-dry wt)								
Total LPAH (a,b)	5,200	---	**137**		**122**			
Naphthalene	2,100	---	**14** J		**21**			
Acenaphthylene	560	---	20 U		20 U			
Acenaphthene	500	---	**19** J		**10** J			
Fluorene	540	---	**21**		**17** J			
Phenanthrene	1,500	---	**64**		**54**			
Anthracene	960	---	**19** J		**20**			
2-Methylnaphthalene	670	---	**21**		**25**			

TABLE 4 (from Landau, 2010b)
A-LAYER SEDIMENT SAMPLE ANALYTICAL RESULTS - DRY WEIGHT BASIS
BELLINGHAM COLD STORAGE
BELLINGHAM, WASHINGTON

	DMMP Criteria (m)		DMMU BCS-1		DMMU BCS-2			
						FIELD DUP of BCS-CMP2A	LAB DUP of BCS-CMP3A	
			BCS-CMP1A	BCS-SED1A	BCS-CMP2A	BCS-CMP3A	BCS-CMP3A DUP	BCS-SED4A
			RF79J/RG05A/	RF79A	RF79W/RG05C/	RF79Z/		RF79M
	Screening	Bioaccumulation	G1040-18-1		G1040-18-3	G1040-18-7	G1040-18-8B	
	Level	Trigger	7/22/2010	7/22/2010	7/22/2010	7/22/2010	7/22/2010	7/22/2010
Total HPAH (a,c)	12,000	---	**615**		**629**			
Fluoranthene	1,700	4,600	**190**		**140**			
Pyrene	2,600	11,980	**140**		**150**			
Benzo(a)anthracene	1,300	---	**62**		**56**			
Chrysene	1,400	---	**79**		**82**			
Benzo(b)fluoranthene	---	---	**42**		**48**			
Benzo(k)fluoranthene	---	---	**42**		**48**			
Total Benzofluoranthenes (a,d)	3,200	---	**84**		**96**			
Benzo(a)pyrene	1,600	---	**33**		**41**			
Indeno(1,2,3-cd)pyrene	600	---	**14** J		**25**			
Dibenz(a,h)anthracene	230	---	20 U		**11** J			
Benzo(g,h,i)perylene	670	---	**13** J		**28**			
CHLORINATED HYDROCARBONS								
EPA Method 8270D (µg/kg-dry wt)								
1,3-Dichlorobenzene	170	---	20 U		20 U			
1,4-Dichlorobenzene	110	---	20 U		20 U			
1,2-Dichlorobenzene	35	---	20 U		20 U			
1,2,4-Trichlorobenzene	31	---	20 U		20 U			
Hexachlorobenzene	22	168	20 U		20 U			
EPA Method 8260C (µg/kg-dry wt)								
1,3-Dichlorobenzene	170	---		1.4 U				1.3 UJ
1,4-Dichlorobenzene	110	---		1.4 U				1.3 UJ
1,2-Dichlorobenzene	35	---		1.4 U				1.3 UJ
1,2,4-Trichlorobenzene	31	---		6.8 U				6.5 UJ
PHTHALATES								
EPA Method 8270D (µg/kg-dry wt)								
Dimethylphthalate	71	---	20 U		20 U			
Diethylphthalate	200	---	**15** J		20 U			
Di-n-Butylphthalate	1,400	---	20 U		20 U			
Butylbenzylphthalate	63	---	20 U		20 U			
bis(2-Ethylhexyl)phthalate	1,300	---	**33**		**67**			
Di-n-Octyl phthalate	6,200	---	20 U		20 U			
PHENOLS								
EPA Method 8270D (µg/kg)								
Phenol	420	---	**32**		**13** J			
2-Methylphenol	63	---	20 U		20 U			
4-Methylphenol	670	---	**28**		20 U			
2,4-Dimethylphenol	29	---	20 U		20 U			
Pentachlorophenol	400	504	97 U		98 UJ			

TABLE 4 (from Landau, 2010b)
A-LAYER SEDIMENT SAMPLE ANALYTICAL RESULTS - DRY WEIGHT BASIS
BELLINGHAM COLD STORAGE
BELLINGHAM, WASHINGTON

	DMMP Criteria (m)		DMMU BCS-1		DMMU BCS-2			
						FIELD DUP of BCS-CMP2A	LAB DUP of BCS-CMP3A	
			BCS-CMP1A	BCS-SED1A	BCS-CMP2A	BCS-CMP3A	BCS-CMP3A DUP	BCS-SED4A
			RF79J/RG05A/	RF79A	RF79W/RG05C/	RF79Z/		RF79M
	Screening	Bioaccumulation	G1040-18-1		G1040-18-3	G1040-18-7	G1040-18-8B	
	Level	Trigger	7/22/2010	7/22/2010	7/22/2010	7/22/2010	7/22/2010	7/22/2010
MISCELLANEOUS EXTRACTABLES								
EPA Method 8270D (µg/kg-dry wt)								
Benzyl Alcohol	57	---	20 U		20 U			
Benzoic Acid	650	---	200 U		200 U			
Dibenzofuran	540	---	**24**		**22**			
Hexachloroethane	1,400	---	20 U		20 U			
Hexachlorobutadiene	29	---	20 U		20 U			
N-Nitrosodiphenylamine	28	---	20 U		20 U			
ADDITIONAL SVOC								
EPA Method 8270D (µg/kg-dry wt)								
1-Methylnaphthalene	---	---	20 U		**17** J			
VOLATILE ORGANIC COMPOUNDS (µg/kg-dry wt)								
Method SW8260C								
Trichloroethene	160	---		1.4 U				1.3 UJ
Tetrachloroethene	57	---		1.4 U				1.3 UJ
Ethylbenzene	10	---		1.4 U				1.3 UJ
m, p-Xylene	---	---		1.4 U				1.3 UJ
o-Xylene	---	---		1.4 U				1.3 UJ
Total Xylene (a, e)	40	---		1.4 U				1.3 UJ
PESTICIDES (µg/kg-dry wt)								
Method SW8081B								
4,4'-DDD	---	---	2.0 U		2.0 U			
4,4'-DDE	---	---	2.0 U		2.0 U			
4,4'-DDT	---	---	2.0 U		2.0 U			
Total DDT (a,f)	6.9	50	2.0 U		2.0 U			
Aldrin	10	---	0.98 U		0.98 U			
cis-Chlordane	10 (g)	37 (g)	0.98 U		0.98 U			
trans-Chlordane	10 (g)	37 (g)	0.98 U		0.98 U			
Dieldrin	10	---	2.0 U		2.0 U			
Heptachlor	10	---	0.98 U		1.8 U			
gamma-BHC (Lindane)	10	---	0.98 U		0.98 U			

TABLE 4 (from Landau, 2010b)
A-LAYER SEDIMENT SAMPLE ANALYTICAL RESULTS - DRY WEIGHT BASIS
BELLINGHAM COLD STORAGE
BELLINGHAM, WASHINGTON

	DMMP Criteria (m)		DMMU BCS-1		DMMU BCS-2			
						FIELD DUP of BCS-CMP2A	LAB DUP of BCS-CMP3A	
			BCS-CMP1A	BCS-SED1A	BCS-CMP2A	BCS-CMP3A	BCS-CMP3A DUP	BCS-SED4A
			RF79J/RG05A/	RF79A	RF79W/RG05C/	RF79Z/		RF79M
	Screening	Bioaccumulation	G1040-18-1		G1040-18-3	G1040-18-7	G1040-18-8B	
	Level	Trigger	7/22/2010	7/22/2010	7/22/2010	7/22/2010	7/22/2010	7/22/2010
PCBs (µg/kg-dry wt)								
Method SW8082								
Aroclor 1016	---	---	3.9 U		3.9 U			
Aroclor 1242	---	---	3.9 U		3.9 U			
Aroclor 1248	---	---	3.9 U		**12**			
Aroclor 1254	---	---	3.9 U		**6.6**			
Aroclor 1260	---	---	3.9 U		3.9 U			
Aroclor 1221	---	---	3.9 U		3.9 U			
Aroclor 1232	---	---	3.9 U		3.9 U			
Aroclor 1262	---	---	3.9 U		3.9 U			
Aroclor 1268	---	---	3.9 U		3.9 U			
Total PCBs (b)	130	38 (h)	3.9 U		**18.6**			
CONVENTIONALS								
Preserved Total Solids (EPA 160.3; %)	---	---		**57.60**				**56.30**
Sulfide (EPA 376.2; mg/kg)	---	---		**1860**				**1840**
Total Solids (EPA 160.3; %)	---	---	**55.90**		**54.80**	**54.60**		
Total Volatile Solids (EPA 160.4; %)	---	---	**5.54**		**8.32**	**8.30**		
Ammonia (EPA 350.1M; mg/kg)	---	---	**42.6**		**53.1**	**54.1**		
Total Organic Carbon (Plumb81TC; %)	---	---	**0.818**		**2.08**	**2.40**		
PARTICLE/GRAIN SIZE (%)								
Method PSEP-PS								
Gravel - Phi Size > -1 (> 2000 µm)	---	---	**0.0**		**1.9**	**1.5**		
Sand - Phi Size -1 to 0 (2000 to 1000 µm)	---	---	**0.6**		**2**	**1.9**		
Sand - Phi Size 0 to 1 (1000 to 500 µm)	---	---	**0.6**		**4.1**	**3.8**		
Sand - Phi Size 1 to 2 (500 to 250 µm)	---	---	**0.5**		**11.7**	**11.1**		
Sand - Phi Size 2 to 3 (250 to 125 µm)	---	---	**0.9**		**9.6**	**9.2**		
Sand - Phi Size 3 to 4 (125 to 62.5 µm)	---	---	**1.7**		**3.6**	**3.6**		
Silt - Phi Size 4 to 5 (62.5 to 31.0 µm)	---	---	**11.7**		**4.7**	**5.2**		
Silt - Phi Size 5 to 6 (31.0 to 15.6 µm)	---	---	**38.2**		**28.6**	**27.9**		
Silt - Phi Size 6 to 7 (15.6 to 7.8 µm)	---	---	**23.1**		**17.5**	**18.8**		
Silt - Phi Size 7 to 8 (7.8 to 3.9 µm)	---	---	**6.6**		**4.7**	**5.0**		
Clay - Phi Size 8 to 9 (3.9 to 2.0 µm)	---	---	**3.9**		**2.6**	**2.9**		
Clay - Phi Size 9 to 10 (2.0 to 1.0 µm)	---	---	**3.6**		**2.4**	**2.9**		
Clay - Phi Size <10 (< 1.0 µm)	---	---	**8.6**		**6.7**	**6.2**		
Total Fines (Silt & Clay) (<62.5 µm)	---	---	**95.5**		**67.1**	**69**		

TABLE 4 (from Landau, 2010b)
A-LAYER SEDIMENT SAMPLE ANALYTICAL RESULTS - DRY WEIGHT BASIS
BELLINGHAM COLD STORAGE
BELLINGHAM, WASHINGTON

	DMMP Criteria (m)		DMMU BCS-1		DMMU BCS-2			
						FIELD DUP of BCS-CMP2A	LAB DUP of BCS-CMP3A	
			BCS-CMP1A	BCS-SED1A	BCS-CMP2A	BCS-CMP3A	BCS-CMP3A DUP	BCS-SED4A
			RF79J/RG05A/	RF79A	RF79W/RG05C/	RF79Z/		RF79M
	Screening	Bioaccumulation	G1040-18-1		G1040-18-3	G1040-18-7	G1040-18-8B	
	Level	Trigger	7/22/2010	7/22/2010	7/22/2010	7/22/2010	7/22/2010	7/22/2010
DIOXIN/FURANS (pg/g)								
Method 1613B								
2,3,7,8-TCDD	---	---	0.116 U		0.280 U	0.239 U	0.214 U	
1,2,3,7,8-PeCDD	---	---	0.291 U		**1.25** (i)	1.08 U	**0.850** (i)	
1,2,3,4,7,8-HxCDD	---	---	**0.452** (i)		**1.85** (i)	1.39 U	**1.47** (i)	
1,2,3,6,7,8-HxCDD	---	---	**1.85** (i)		**13.4**	**9.78**	**10.0**	
1,2,3,7,8,9-HxCDD	---	---	**0.941** (i)		**4.92**	**3.62** (i)	3.63 U	
1,2,3,4,6,7,8-HpCDD	---	---	**55.2**		**388**	**309**	**353**	
OCDD	---	---	**514**		**2780**	**2170**	**2270**	
2,3,7,8-TCDF	---	---	**0.808** (i)		1.37 U	**0.823** J	**0.920** J	
1,2,3,7,8-PeCDF	---	---	**0.214** (i)		**0.605** (i)	**0.643** (i)	**0.524** (i)	
2,3,4,7,8-PeCDF	---	---	**0.517** J (i)		**1.73** J (i)	**1.34** J (i)	**1.45** J (i)	
1,2,3,4,7,8-HxCDF	---	---	**0.709** (i)		**5.26**	**4.40** (i)	**4.06** (i)	
1,2,3,6,7,8-HxCDF	---	---	0.349 U		2.99 U	**2.04** (i)	**2.09** (i)	
2,3,4,6,7,8-HxCDF	---	---	0.478 U		**5.56**	**3.83** (i)	**4.56** (i)	
1,2,3,7,8,9-HxCDF	---	---	0.219 U		**1.50** (i)	1.90 U	0.663 U	
1,2,3,4,6,7,8-HpCDF	---	---	**7.62**		**204** J	**134** J	**162**	
1,2,3,4,7,8,9-HpCDF	---	---	0.581 U		**13.4**	**9.56**	**10.4**	
OCDF	---	---	**24.0**		**1080** J	**708** J	**908**	
Total TCDDs	---	---	**2.10**		**14.5** J	**7.8** J	**10.7** J	
Total PeCDDs	---	---	**3.13**		**31.1** J	**15.9** J	**20.7**	
Total HxCDDs	---	---	**14.7**		**103** J	**66.2** J	**82.9**	
Total HpCDDs	---	---	**169**		**900**	**719**	**848**	
Total TCDFs	---	---	**1.61**		**6.60** J	**4.22** J	**7.09** J	
Total PeCDFs	---	---	**1.53**		**10.4** J (j)	**5.54**	**7.16**	
Total HxCDFs	---	---	**9.34**		**150**	**121**	**122**	
Total HpCDFs	---	---	**34.6**		**1240** J	**867** J	**983**	
TEQ (ND=0) (k)	---	---	**1.4** J		**12.2** J	**8.3** J	**9.8** J	
TEQ (ND=1/2 DL) (l)	---	---	**1.7** J		**12.6** J	**9.1** J	**10.1** J	

TABLE 4 (from Landau, 2010b)
A-LAYER SEDIMENT SAMPLE ANALYTICAL RESULTS - DRY WEIGHT BASIS
BELLINGHAM COLD STORAGE
BELLINGHAM, WASHINGTON

U = Indicates the compound was undetected at the reported concentration.
J = Indicates the analyte was positively identified; the associated numerical value is the approximate concentration of the analyte in the sample.
UJ = The analyte was not detected in the sample; the reported sample reporting limit is an estimate.
NA = Not analyzed.
Bold = Detected compound.
Boxed results exceed the cleanup screening levels.
(a) Where chemical criteria in this table represent the sum of individual compounds or isomers, the following methods shall be applied:
  (i) Where chemical analyses identify an undetected value for every individual compound/isomer, then the single highest detection limit shall represent the sum of the respective compounds/isomers.
  (ii) Where chemical analyses detect one or more individual compounds/isomers, only the detected concentrations will be added to represent the group sum.
(b) The LPAH criterion represents the sum of the following "low molecular weight polynuclear aromatic hydrocarbon" compounds: naphthalene, acenaphthylene, acenaphthene, fluorene, phenanthrene, and anthracene. The LPAH criterion is not the sum of the criteria values for the individual LPAH compounds listed.
(c) The HPAH criterion represents the sum of the following "high molecular weight polynuclear aromatic hydrocarbon" compounds: fluoranthene, pyrene, benzo(a)anthracene, chrysene, total benzofluoranthenes, benzo(a)pyrene, indeno(1,2,3-c,d)pyrene, dibenz(a,h)anthracene, and benzo(g,h,i)perylene. The HPAH criterion is not the sum of the criteria values for the individual HPAH compounds as listed.
(d) The total benzofluoranthenes criterion represents the sum of the concentrations of the "B," "J," and "K" isomers.
(e) The total xylene criterion represents the sum of the concentrations of the "o-," "m-," and "p-" xylenes.
(f) The total DDT criterion represents the sum of 4,4'-DDD, 4,4'-DDE, and 4,4'-DDT.
(g) The chlordane criterion represents the criterion for total chlordane, which is represented by the sum of cis-chlordane, trans-chlordane, cis-nonachlor, trans-nonachlor, and oxychlordane (DMMP 2007).
(h) Value is normalized to total organic carbon (TOC) and is expressed in mg/kg TOC.
(i) The amount detected is less than the Lower Method Calibration Limit.
(j) Indicates the presence of a peak in the polychlorinated diphenylether channel that could cause a false positive or an overestimation of the affected analyte.
(k) Toxicity equivalent (TEQ) calculated using 2005 World Health Organization (WHO) toxicity equivalency factors (TEFs) and zero for non-detects.
(l) Toxicity equivalent (TEQ) calculated using 2005 World Health Organization (WHO) toxicity equivalency factors (TEFs) and one half the detection limit for non-detects.
(m) Dredged Material Management Program (DMMP) marine guideline values; DMMP Users' Manual Table 6-1.
(n) The samples were initially analyzed for selenium using EPA Method 6010; however, due to reporting limits above the DMMP marine bioaccumulation trigger criteria, the archived sediment samples were reanlyzed using EPA Method 6020. The reanalysis results are presented in this table.

TABLE 5 (from Landau, 2010b)
Z-LAYER SEDIMENT SAMPLE ANALYTICAL RESULTS
BELLINGHAM COLD STORAGE
BELLINGHAM, WASHINGTON

	SMS Criteria (m)		DMMU BCS-1		DMMU BCS-2	
	Sediment Quality Standard	Cleanup Screening Level	BCS-CMP1Z RF79K/RG05B G1040-18-2 7/22/2010	BCS-SED1Z RF79B 7/22/2010	BCS-CMP2Z RF79X/RG05D G1040-18-6 7/22/2010	BCS-SED4Z RF79N 7/22/2010
TOTAL METALS (mg/kg-dry wt)						
Method SW6010B/7471A						
Antimony	---	---	8 U		9 U	
Arsenic	57	93	8 U		9 U	
Cadmium	5.1	6.7	**0.6**		**0.8**	
Chromium	260	270	**57.0**		**71.7**	
Copper	390	390	**36.0**		**51.3**	
Lead	450	530	**7**		**11**	
Mercury	0.41	0.59	**0.11**		**0.20**	
Nickel	---	---	**92**		**116**	
Selenium (n)	---	---	**0.8**		**0.9**	
Silver	6.1	6.1	0.5 U		0.5 U	
Zinc	410	960	**79**		**98**	
PORE WATER TBT						
Krone (µg/L)						
Tributyltin Ion	---	---	0.008 U		0.008 U	
Dibutyltin Ion	---	---	0.012 U		0.012 U	
Butyltin	---	---	**0.009**		**0.023**	
TBT (µg/kg-dry wt)						
Method KRONE89						
Tributyltin Ion	---	---	3.5 U		3.7 U	
Dibutyltin Ion	---	---	5.2 U		5.6 U	
Butyltin	---	---	3.7 U		3.9 U	
PAHs Method 8270D (mg/kg OC)						
Total LPAH (a,b)	370	780	**1.5**		**11.3**	
Naphthalene	99	170	1.2 U		**1.9**	
Acenaphthylene	66	66	1.2 U		1.6 U	
Acenaphthene	16	57	1.2 U		**1.1** J	
Fluorene	23	79	1.2 U		**1.7**	
Phenanthrene	100	480	**1.5**		**4.8**	
Anthracene	220	1200	1.2 U		**1.8**	
2-Methylnaphthalene	38	64	**0.6** J		**2.4**	

TABLE 5 (from Landau, 2010b)
Z-LAYER SEDIMENT SAMPLE ANALYTICAL RESULTS
BELLINGHAM COLD STORAGE
BELLINGHAM, WASHINGTON

	SMS Criteria (m)		DMMU BCS-1		DMMU BCS-2	
	Sediment Quality Standard	Cleanup Screening Level	BCS-CMP1Z RF79K/RG05B G1040-18-2 7/22/2010	BCS-SED1Z RF79B 7/22/2010	BCS-CMP2Z RF79X/RG05D G1040-18-6 7/22/2010	BCS-SED4Z RF79N 7/22/2010
Total HPAH (a,c)	960	5,300	**13.9**		**41.0**	
Fluoranthene	160	1200	**3.1**		**9.8**	
Pyrene	1,000	1400	**3.5**		**10.7**	
Benzo(a)anthracene	110	270	**1.6**		**3.9**	
Chrysene	110	460	**2.1**		**5.2**	
Benzo(b)fluoranthene	---	---	**1.3**		**3.1**	
Benzo(k)fluoranthene	---	---	**1.3**		**3.1**	
Total Benzofluoranthenes (a,d)	230	450	**2.5**		**6.2**	
Benzo(a)pyrene	99	210	**1.1** J		**2.8**	
Indeno(1,2,3-cd)pyrene	34	88	1.2 U		**1.2** J	
Dibenz(a,h)anthracene	12	33	1.2 U		1.6 U	
Benzo(g,h,i)perylene	31	78	1.2 U		**1.1** J	
CHLORINATED HYDROCARBONS						
EPA Method 8270D (mg/kg OC)						
1,3-Dichlorobenzene	---	---	1.2 U		1.6 U	
1,4-Dichlorobenzene	3.1	9	1.2 U		1.6 U	
1,2-Dichlorobenzene	2.3	2.3	1.2 U		1.6 U	
1,2,4-Trichlorobenzene	0.81	1.8	1.2 U		1.6 U	
Hexachlorobenzene	0.38	2.3	1.2 U		1.6 U	
EPA Method 8260C (mg/kg OC)						
1,3-Dichlorobenzene	---	---		0.1 U		0.1 U
1,4-Dichlorobenzene	3.1	9		0.1 U		0.1 U
1,2-Dichlorobenzene	2.3	2.3		0.1 U		0.1 U
1,2,4-Trichlorobenzene	0.81	1.8		0.4 U		0.5 U
PHTHALATES						
EPA Method 8270D (mg/kg OC)						
Dimethylphthalate	53	53	1.2 U		1.6 U	
Diethylphthalate	61	110	1.2 U		1.6 U	
Di-n-Butylphthalate	220	1,700	1.2 U		1.6 U	
Butylbenzylphthalate	4.9	64	1.2 U		1.6 U	
bis(2-Ethylhexyl)phthalate	47	78	**1.9**		**3.0**	
Di-n-Octyl phthalate	58	4,500	1.2 U		1.6 U	
PHENOLS						
EPA Method 8270D (µg/kg-dry wt)						
Phenol	420	1,200	20 U		20 U	
2-Methylphenol	63	63	20 U		20 U	
4-Methylphenol	670	670	20 U		20 U	
2,4-Dimethylphenol	29	29	20 U		20 U	
Pentachlorophenol	360	690	98 U		98 U	

TABLE 5 (from Landau, 2010b)
Z-LAYER SEDIMENT SAMPLE ANALYTICAL RESULTS
BELLINGHAM COLD STORAGE
BELLINGHAM, WASHINGTON

	SMS Criteria (m)		DMMU BCS-1		DMMU BCS-2	
	Sediment Quality Standard	Cleanup Screening Level	BCS-CMP1Z RF79K/RG05B G1040-18-2 7/22/2010	BCS-SED1Z RF79B 7/22/2010	BCS-CMP2Z RF79X/RG05D G1040-18-6 7/22/2010	BCS-SED4Z RF79N 7/22/2010
MISCELLANEOUS EXTRACTABLES						
EPA Method 8270D (µg/kg-dry wt)						
Benzyl Alcohol	57	73	20 U		20 U	
Benzoic Acid	650	650	200 U		200 U	
EPA Method 8270D (mg/kg OC)						
Dibenzofuran	15	58	**0.6** J		**2.2**	
Hexachlorobutadiene	---	---	1.2 U		1.6 U	
Hexachloroethane	3.9	6.2	1.2 U		1.6 U	
N-Nitrosodiphenylamine	11	11	1.2 U		1.6 U	
ADDITIONAL SVOC						
EPA Method 8270D (µg/kg-dry wt)						
1-Methylnaphthalene	---	---	20 U		**21**	
VOLATILE ORGANIC COMPOUNDS (µg/kg-dry wt)						
Method SW8260C						
Trichloroethene	---	---		1.3 U		1.3 U
Tetrachloroethene	---	---		1.3 U		1.3 U
Ethylbenzene	---	---		1.3 U		1.3 U
m, p-Xylene	---	---		1.3 U		1.3 U
o-Xylene	---	---		1.3 U		1.3 U
Total Xylene (a, e)	---	---		1.3 U		1.3 U
PESTICIDES (µg/kg-dry wt)						
Method SW8081B						
4,4'-DDD	---	---	2.0 U		2.00 U	
4,4'-DDE	---	---	2.0 U		2.00 U	
4,4'-DDT	---	---	2.0 U		2.00 U	
Total DDT (a, f)	---	---	2.0 U		2.00 U	
Aldrin	---	---	0.98 U		0.99 U	
cis-Chlordane	---	---	0.98 U		0.99 U	
trans-Chlordane	---	---	0.98 U		0.99 U	
Dieldrin	---	---	2.0 U		2.00 U	
Heptachlor	---	---	0.98 U		0.99 U	
gamma-BHC (Lindane)	---	---	0.98 U		0.99 U	

TABLE 5 (from Landau, 2010b)
Z-LAYER SEDIMENT SAMPLE ANALYTICAL RESULTS
BELLINGHAM COLD STORAGE
BELLINGHAM, WASHINGTON

	SMS Criteria (m)		DMMU BCS-1		DMMU BCS-2	
	Sediment Quality Standard	Cleanup Screening Level	BCS-CMP1Z RF79K/RG05B G1040-18-2 7/22/2010	BCS-SED1Z RF79B 7/22/2010	BCS-CMP2Z RF79X/RG05D G1040-18-6 7/22/2010	BCS-SED4Z RF79N 7/22/2010
PCBs (mg/kg OC) (a)						
Method SW8082						
Aroclor 1016	---	---	0.2 U		0.3 U	
Aroclor 1242	---	---	0.2 U		0.3 U	
Aroclor 1248	---	---	0.2 U		0.3 U	
Aroclor 1254	---	---	0.2 U		0.3 U	
Aroclor 1260	---	---	0.2 U		0.3 U	
Aroclor 1221	---	---	0.2 U		0.3 U	
Aroclor 1232	---	---	0.2 U		0.3 U	
Aroclor 1262	---	---	0.2 U		0.3 U	
Aroclor 1268	---	---	0.2 U		0.3 U	
Total PCBs (a)	12	65	0.2 U		0.3 U	
CONVENTIONALS						
Preserved Total Solids (EPA 160.3; %)				**54.50**		**56.90**
Sulfide (EPA 376.2; mg/kg)	---	---		**2270**		**1710**
Total Solids (EPA 160.3; %)	---	---	**59.30**		**56.60**	
Total Volatile Solids (EPA 160.4; %)	---	---	**5.60**		**8.45**	
Ammonia (EPA 350.1M; mg/kg)	---	---	**59.0**		**63.2**	
Total Organic Carbon (Plumb81TC; %)	---	---	**1.66**		**1.22**	
PARTICLE/GRAIN SIZE (%)						
Method PSEP-PS						
Gravel - Phi Size > -1 (> 2000 µm)	---	---	**0.0**		**0.9**	
Sand - Phi Size -1 to 0 (2000 to 1000 µm)	---	---	**0.6**		**0.8**	
Sand - Phi Size 0 to 1 (1000 to 500 µm)	---	---	**0.8**		**1.2**	
Sand - Phi Size 1 to 2 (500 to 250 µm)	---	---	**2.1**		**2.9**	
Sand - Phi Size 2 to 3 (250 to 125 µm)	---	---	**11.2**		**5.4**	
Sand - Phi Size 3 to 4 (125 to 62.5 µm)	---	---	**8.1**		**4.6**	
Silt - Phi Size 4 to 5 (62.5 to 31.0 µm)	---	---	**7.8**		**5.0**	
Silt - Phi Size 5 to 6 (31.0 to 15.6 µm)	---	---	**22.2**		**22.7**	
Silt - Phi Size 6 to 7 (15.6 to 7.8 µm)	---	---	**22.2**		**24.6**	
Silt - Phi Size 7 to 8 (7.8 to 3.9 µm)	---	---	**8.7**		**10.6**	
Clay - Phi Size 8 to 9 (3.9 to 2.0 µm)	---	---	**4.9**		**5.6**	
Clay - Phi Size 9 to 10 (2.0 to 1.0 µm)	---	---	**3.8**		**4.8**	
Clay - Phi Size <10 (< 1.0 µm)	---	---	**7.6**		**10.9**	
Total Fines (Silt & Clay) (<62.5 µm)	---	---	**77.2**		**84.3**	

TABLE 5 (from Landau, 2010b)
Z-LAYER SEDIMENT SAMPLE ANALYTICAL RESULTS
BELLINGHAM COLD STORAGE
BELLINGHAM, WASHINGTON

	SMS Criteria (m)		DMMU BCS-1		DMMU BCS-2	
	Sediment Quality Standard	Cleanup Screening Level	BCS-CMP1Z RF79K/RG05B G1040-18-2 7/22/2010	BCS-SED1Z RF79B 7/22/2010	BCS-CMP2Z RF79X/RG05D G1040-18-6 7/22/2010	BCS-SED4Z RF79N 7/22/2010
DIOXIN/FURANS (pg/g)						
Method 1613B	---	---				
2,3,7,8-TCDD	---	---	0.478 U		**0.331** (i)	
1,2,3,7,8-PeCDD	---	---	0.570 U		**1.20** (i)	
1,2,3,4,7,8-HxCDD	---	---	0.878 U		**1.34** (i)	
1,2,3,6,7,8-HxCDD	---	---	**3.24** (i)		**4.63** (i)	
1,2,3,7,8,9-HxCDD	---	---	1.56 U		**2.92** (i)	
1,2,3,4,6,7,8-HpCDD	---	---	**85.9**		**133**	
OCDD	---	---	**834**		**1120**	
2,3,7,8-TCDF	---	---	**0.877** J		**1.52**	
1,2,3,7,8-PeCDF	---	---	0.481 U		**1.20** (i)	
2,3,4,7,8-PeCDF	---	---	**0.620** J (i)		**1.42** J (i)	
1,2,3,4,7,8-HxCDF	---	---	**1.20** (i)		**2.30** (i)	
1,2,3,6,7,8-HxCDF	---	---	0.623 U		**1.28** (i)	
2,3,4,6,7,8-HxCDF	---	---	**0.763** (i)		1.71 U	
1,2,3,7,8,9-HxCDF	---	---	1.02 U		**1.49** (i)	
1,2,3,4,6,7,8-HpCDF	---	---	**24.2**		**25.0**	
1,2,3,4,7,8,9-HpCDF	---	---	1.62 U		**2.34** (i)	
OCDF	---	---	**93.6**		**90.0**	
Total TCDDs	---	---	**1.47**		**21.2**	
Total PeCDDs	---	---	**9.33**		**30.6**	
Total HxCDDs	---	---	**28.8**		**50.0**	
Total HpCDDs	---	---	**257**		**386**	
Total TCDFs	---	---	**1.82** J (j)		**6.84** J (j)	
Total PeCDFs	---	---	**3.75** J (j)		**4.46** J (j)	
Total HxCDFs	---	---	**24.7** J (j)		**27.3**	
Total HpCDFs	---	---	**118**		**114**	
TEQ (ND=0) (k)	---	---	**2.2** J		**5.5** J	
TEQ (ND=1/2 DL) (l)	---	---	**2.9** J		**5.6** J	

TABLE 5 (from Landau, 2010b)
Z-LAYER SEDIMENT SAMPLE ANALYTICAL RESULTS
BELLINGHAM COLD STORAGE
BELLINGHAM, WASHINGTON

J = Indicates the analyte was positively identified; the associated numerical value is the approximate concentration of the analyte in the sample.
NA = Not analyzed.
Bold = Detected compound.
Boxed results exceed the cleanup screening levels.
(a) Where chemical criteria in this table represent the sum of individual compounds or isomers, the following methods shall be applied:
(i) Where chemical analyses identify an undetected value for every individual compound/isomer, then the single highest detection limit shall represent the sum of the respective compounds/isomers.
(ii) Where chemical analyses detect one or more individual compounds/isomers, only the detected concentrations will be added to represent the group sum.
(b) The LPAH criterion represents the sum of the following "low molecular weight polynuclear aromatic hydrocarbon" compounds: naphthalene, acenaphthylene, acenaphthene, fluorene, phenanthrene, and anthracene. The LPAH criterion is not the sum of the criteria values for the individual LPAH compounds listed.
(c) The HPAH criterion represents the sum of the following "high molecular weight polynuclear aromatic hydrocarbon" compounds: fluoranthene, pyrene, benzo(a)anthracene, chrysene, total benzofluoranthenes, benzo(a)pyrene, indeno(1,2,3-c,d)pyrene, dibenz(a,h)anthracene, and benzo(g,h,i)perylene. The HPAH criterion is not the sum of the criteria values for the individual HPAH compounds as listed.
(d) The total benzofluoranthenes criterion represents the sum of the concentrations of the "B," "J," and "K" isomers.
(e) The total xylene criterion represents the sum of the concentrations of the "o-," "m-," and "p-" xylenes.
(f) The total DDT criterion represents the sum of 4,4'-DDD, 4,4'-DDE, and 4,4'-DDT.
(i) The amount detected is less than the Lower Method Calibration Limit.
(j) Indicates the presence of a peak in the polychlorinated diphenylether channel that could cause a false positive or an overestimation of the affected analyte.
(k) Toxicity equivalent (TEQ) calculated using 2005 World Health Organization (WHO) toxicity equivalency factors (TEFs) and zero for non-detects.
(l) Toxicity equivalent (TEQ) calculated using 2005 World Health Organization (WHO) toxicity equivalency factors (TEFs) and one half the detection limit for non-detects.
(m) Ecology Sediment Management Standards (SMS) Marine Sediment Quality Standards and Cleanup Screening Levels, WAC 173-204.
(n) The samples were initially analyzed for selenium using EPA Method 6010; however, due to reporting limits above the DMMP marine bioaccumulation trigger criteria, the archived sediment samples were reanlyzed using EPA Method 6020. The reanalysis results are presented in this table.