APPENDIX H, Plan Formulation

Additional Water Storage Project, Draft Feasibility Report & EIS

Howard Hanson Dam,
Green River, Washington
April 1998

prepared by
Seattle District
US Army Corps of Engineers

Tacoma Public Utilities

US Army Corps of Engineers®

APPENDIX H
PLAN FORMULATION

TABLE OF CONTENTS

H-

SECTION 1. INTRODUCTION **1**

1.1 STUDY AUTHORIZATION 1
1.2 STUDY OBJECTIVE 1
1.3 STUDY AREAS 1
1.4 GREEN RIVER BASIN DESCRIPTION 2
1.5 EXISTING HOWARD A. HANSON DAM PROJECT 3
1.5.1 Authorized Project Purposes *3*
1.5.3 Site Description and Selection *4*
1.5.4 Original Project Description and Operation *4*
1.5.5 Subsequent Project Structural Modification *7*
1.5.6 Subsequent Project Operational Changes *7*
1.5.7 Changes Resulting From Current 1135 Project *9*
1.5.8 Concerns Resulting From Project Operation *10*
1.6 FACTORS POTENTIALLY AFFECTING EXISTING PROJECT 11
1.6.1 Project Operation Problems *11*
1.6.2 Project Operations Constraints *12*
1.6.3 Treaty Tribes Rights, Agreements, Corps Trust Responsibility *13*
1.6.4 Regional Water Supply Planning *15*
1.6.5 Fish and Watershed Resource History, Management, and Outlook *15*
1.6.6 Forest Management Practices *19*
1.6.7 Flood Plain Development/Regulations *21*
1.6.8 Water Rights and Flow Requirements *21*
1.6.9 Regional Power Outlook *25*
1.6.10 Reopening of the BNSF Rail Line and Potential New 4 Mile Tunnel Construction *25*
1.6.11 Recreational Desires *26*
1.7 EXISTING CONDITIONS 26
1.7.1 Flood Control *26*
1.7.2 Low Flow Augmentation for Fish Enhancement *27*
1.7.3 Municipal and Industrial Water Supply *28*
1.7.4 Irrigation (Agricultural Water Supply) *28*
1.7.5 Recreation *29*
1.7.6 Power *29*
1.7.7 Ecosystem Restoration Opportunities *29*
1.8 WITHOUT PROJECT CONDITION (ALTERNATIVE 1 – NO ACTION) 31
1.8.1 Flood Control *31*
1.8.2 Low Flow Augmentation for Fish Enhancement *31*
1.8.3 Section 1135 Low Flow Augmentation for Environmental Restoration *32*
1.8.4 Municipal and Industrial Water Supply *32*
1.8.5 Irrigation (Agricultural Water Supply) *33*
1.8.6 Recreation *33*
1.8.7 Power *33*
1.8.8 Ecosystem Restoration Opportunities *33*
1.9 WATER AND RELATED LAND RESOURCE NEEDS 34

1.9.1 Flood Control *34*
1.9.2 Low Flow Augmentation *34*
1.9.3 1135 Low Flow Augmentation *35*
1.9.4 Municipal and Industrial Water Supply *36*
1.9.5 Irrigation Water Supply *36*
1.9.6 Recreation *36*
1.9.7 Power *37*
1.9.8 Environmental Restoration Opportunities *37*

SECTION 2 – PRELIMINARY PLAN FORMULATION 38

2.1 RECONNAISSANCE STUDY ALTERNATIVES AND EVALUATION 38
2.1.1 Early Planning Objectives *38*
2.1.2 Planning Criteria *38*
2.1.3 Alternatives Considered *38*
2.1.4 Alternative Evaluation *39*
2.2 PLAN FORMULATION STRATEGY 39
2.2.1 Preliminary Planning Objectives *40*
2.2.2 Preliminary Planning Criteria and Assumptions *40*
2.2.3 Study Advisory Committees *43*
2.3 PRELIMINARY ALTERNATIVES CONSIDERED 46
2.3.1 Water Supply Alternatives: *47*
2.3.2 Alternative 2 – Modification of Howard Hanson Dam *47*
2.3.3 Alternative 3 – Wells *47*
2.3.4 Alternative 4 – Conservation/Demand Management and Industrial Re-Use Alternatives *49*
2.3.5 Alternative 5 – Transfers From Other Systems *49*
2.3.6 Alternative 6 – New Storage and/or Diversion Facilities *50*
2.3.7 Alternative 7 – Low Flow Augmentation Alternatives: *51*
2.3.8 Alternative 8 – Water Quality Alternatives *52*
2.3.9 Alternative 9 – Fish Passage Alternatives: *52*
2.3.10 Alternative 10 – Fish Culture Alternatives *55*
2.3.11 Alternative 11 – Habitat Mitigation/Restoration Alternatives *56*
2.4 PRELIMINARY SCREENING OF ALTERNATIVES 59
2.4.1 Water Supply Alternatives *59*
2.4.2 Low Flow Augmentation Alternatives *60*
2.3.4 Water Quality Alternatives *60*
2.4.4 Fish Passage Alternatives *60*
2.4.5 Fish Culture Alternatives *61*
2.4.6 Habitat Mitigation and Restoration Alternatives *61*

SECTION 3. REFINEMENT OF ALTERNATIVES 62

3.1 REFINED PLAN FORMULATION STRATEGY 62
3.1.1 Planning Objectives *62*
3.1.2 Refined Planning Criteria *63*
3.1.3 Study Advisory Committee *65*
3.2 WATER SUPPLY ALTERNATIVES 66
3.2.1 Alternative 2 – Modification of Howard Hanson Dam *67*
3.2.2 Alternative 3 – Wells *68*
3.2.3 Alternative 4 – Conservation/Demand Management and Industrial Reuse *68*
3.2.5 Evaluation of Water Supply Alternatives *69*
3.3 LOW FLOW AUGMENTATION ALTERNATIVES 69
3.3.1 Alternative 7B –Mimic Natural Hydrology During Refill and Provide Low Flow Augmentation *69*
3.3.2 Evaluation of Low Flow Augmentation Alternatives *71*
3.4 FISH PASSAGE ALTERNATIVES 72
3.4.1 Alternative 9A1 – Add a Pinch Valve to the Existing 48 inch Bypass Pipe *72*

3.4.2 Alternative 9A2 – Alternative 9A1 Plus Smoothing of Pipe Curves *72*
3.4.3 Alternative 9A3 – Alternative 9A1 and 9A2 Plus Wet Well Chamber in the Existing Tower ... *72*
3.4.4 Alternative 9A4 – Alternative 9A1, 9A2, and 9A2 Plus Surface Collector on the Existing Tower *73*
3.4.5 Alternative 9A5 – New tower with Single Lock/Single Screen Connected to the Existing Tunnel73
3.4.6 Alternative 9A6 – New Tower with Single Lock/Single Screen and New Tunnel and Stilling Basin *73*
3.4.7 Alternative 9A7 – New Tower with Double Lock/Double Screen and New Tunnel and Stilling Basin *73*
3.4.8 Alternative 9A8 – New Tower with One Enlarged Screen in Single Lock and New Tunnel and Stilling Basin *74*
3.4.9 Alternative 9B1 – Fish Collector above Reservoir with Truck Transport *74*
3.4.10 Alternative 9B2 – Fish Collector above Reservoir with Flume Transport *75*
3.4.11 Fish Passage Alternative Combinations *75*
3.4.12 Evaluation of Fish Passage Alternatives *75*
3.4.13 Recommended Fish Passage Alternative and Temperature Control *83*
3.5 HABITAT MITIGATION/RESTORATION ALTERNATIVES 84
3.5.1 Alternative 11A – Side Channel Improvements *84*
3.5.2 Alternative 11B1 – Stream and River Improvements *85*
3.5.3 Alternative 11B2 –Sites and Volumes Considered for Placement of Gravel *87*
3.5.4 Alternative 11C – Reservoir Improvements Considered for Fish and Wildlife Mitigation *87*
3.5.5 Alternative 11D – Terrestrial Habitat Improvements above the Riparian Zone *88*
3.6.6 Evaluation of Mitigation/Restoration Alternatives *89*

SECTION 4. FORMULATION & EVALUATION OF FINAL ALTERNATIVES 92

4.1 FINAL PLAN FORMULATION STRATEGY 92
4.1.1 Planning Objectives *92*
4.1.2 Planning Criteria *92*
4.1.4 Water Supply and Restoration Criteria for Phased Storage *93*
4.2 DESCRIPTION OF FINAL ALTERNATIVES 94
4.2.1 Alternative 1 – No Action *94*
4.2.2 Alternative 2A – Additional Water Supply With fish passage for mitigation *96*
4.2.3 Alternative 2B – Immediate Full Development of Water Supply and Environmental Restoration with Fish Passage *97*
4.2.4 Alternative 2C – Phased Development of Water Supply with Fish Passage and Environmental Restoration *100*
4.3 COMPARATIVE EVALUATION OF FINAL ALTERNATIVES 101
4.3.1 General *101*
4.3.2 National Economic Development *102*
4.3.3 Environmental Quality Criteria *103*
4.3.4 Regional Development. *104*
4.3.5 Impacts to and/or Affects on Existing Project Operation *104*
4.3.6 Operation & Maintenance *107*
4.3.7 Funding and Budget - *108*
4.4 DESIGNATION OF ALTERNATIVE PLANS 108
4.4.1 National Economic Development. *108*
4.4.2 Least Environmentally Damaging *108*
4.4.3 Preferred (Tentatively Recommended) Plan *109*

SECTION 5. LITERATURE CITED 110

Figures

(at end of text)

Figure 1-1	Vicinity and Location Map
Figure 1-2	Howard Hanson Dam within the Green River Watershed
Figure 1-3	Green-Duwamish River Basin
Figure 1-4	Site Map
Figure 1-5	Howard Hanson Dam, Cross-section and Elevation
Figure 4-1	MIS Chamber and Fish Lock
Figure 4-2	MIS Chamber and Lock, Section A
Figure 4-3	MIS Chamber and Lock, Section C
Figure 4-4	Fish Collection Facility Plan
Figure 4-5	Fish Mitigation and Restoration Sites: Middle/Upper Green River
Figure 4-6	Fish Mitigation and Restoration Sites: Upper Watershed
Figure 4-7	Wildlife Mitigation Sites

Drawings

(Sheets 1 through 50)

SECTION 1. INTRODUCTION

1.1 STUDY AUTHORIZATION

This study is being conducted under Section 216, Public Law 91-611, Review of Completed Projects, River, Harbor and Flood Control Act of 1970.

1.2 STUDY OBJECTIVE

The Howard A. Hanson Dam (HHD) Additional Water Storage (AWS) Project Study was initiated by the Seattle District, Corps of Engineers (Corps) in August 1989 to address how the existing federal HHD Project could meet water supply needs of the Puget Sound residents. In response to a change in federal policy in 1994 making restoration a higher federal priority, the study objective was expanded to include environmental (ecosystem) restoration.

1.3 STUDY AREAS

The Region of Influence (ROI) for water supply is Pierce and south King Counties and Seattle, Washington and for environmental restoration. ROI is defined as the HHD reservoir and associated lands above the dam to an elevation of 1,240 feet; the mainstem Green/Duwamish River and lands within one mile of the river; and the associated tributaries to the Green River within one mile. For purposes of describing existing conditions and impacts, discussions are divided into the Upper (above HHD) and the Lower (below HHD) Green River watersheds. Right and left riverbank designations are looking downstream. The prominence of HHD within the watershed, as well as differences in habitats and level of development above and below the dam justify the division. Discussions of aquatic habitat and fisheries, which are a dominant concern in the watershed and are covered in more detail. These discussions are divided into specific river reaches (see Appendix F, Part One, Fisheries Mitigation and Restoration).

The study areas and divisions of river reaches for purposes of this study may vary somewhat from those used for the 1978 Draft Environmental Impact Statement for the Continued Operation and Maintenance of Howard A. Hanson Dan, Green River Washington and the 1996 Section 1135 Fish and Wildlife Restoration Study efforts just as they differ to a degree from one another. These are not contradictions; rather they reflect the focus in each case that best addresses the objectives at hand.

1.4 GREEN RIVER BASIN DESCRIPTION

The Green River basin is located in the southern portion of King County, Washington State, and drains an area of 483 square miles. The Green River flows west and north from the Cascade Mountains 60 miles to join with the Black River forming the Duwamish River. The Duwamish River empties into Elliott Bay in Puget Sound 12 miles further downstream. Tributaries to the Green River include Mill Creek (river mile (R.M. 24.2), Big Soos Creek (R.M. 33.8), Newaukum Creek (R.M. 41.2), North Fork Green River, (R.M. 60.5), Smay Creek (R.M. 76.8) and Sunday Creek (R.M. 86.2). The western third of the basin is largely industrialized and includes portions of the cities of Seattle, Tukwila, Renton, Kent, and Auburn. The Muckleshoot Indian Reservation is located northeast of Auburn. The remainder of the basin is mainly used for agriculture, recreation, and forestry.

The physical environment of the Green River system strongly reflects King County and the Puget Sound Region's social change and economic growth since construction of Howard Hanson Dam.

The mouth of the river at Elliott Bay and the lower portion of the river have been dredged and channelized to facilitate navigation. It has been estimated that over 97% of the presumed historical estuarine wetland at the mouth of the Duwamish has been filled to provide land for industry and urban development.

The river above Auburn generally retains its natural sinuous path until it enters the Green River Gorge (at R.M. 45.6). From the gorge to HHD (at R.M. 64.5) the Green River maintains the characteristics of a natural mountain stream. Above HHD the river generally flows through steep, mountainous terrain, restricted by narrow valley walls to its headwaters (at R.M. 88) on Blowout Mountain near Stampede Pass.

The Green River is a valuable economic, cultural, recreational and ecological resource. Intrinsically, the value of the river resource is directly related to the quality of the water. Green River water is used for a variety of purposes. The river is the main source of water supply for the City of Tacoma and is used for municipal and industrial purposes. The City of Tacoma built (in 1913) and maintains a water supply diversion dam at RM 61. Since construction, the Diversion Dam has isolated the Upper Green River and restricted adult fish passage to Lower river areas. The Lower Green River supports valuable fisheries used by commercial, tribal, and recreational interests. The river is used extensively for recreational boating, rafting, swimming, and other activities.

Except for the project, there is little streamside development above the dam. Much of this area is within the protected City of Tacoma watershed. The rest is owned by private timber companies, the Department of Natural Resources (DNR), or the Unites States Forest Service (USFS) and is managed as part of the Mt. Baker-Snoqualmie National Forest.

HHD provided flood damage reduction in the Green River Valley and resulted in an increased level of flood protection to landowners and local governments. The valley continued to transform from agriculture to major industrial, commercial, and residential uses throughout the 1960's. The decade between 1950 and 1960 was a period of improved transportation infrastructure that produced lower freight costs and a drive toward the purchase, aggregation, and development of large scale industrial and commercial centers. Industrial expansion in the lower Green River Valley in the mid 1960's included the development of two major Boeing facilities in Kent and Auburn. The presence of Boeing brought subcontractors, suppliers, and support functions into the lower Valley area. Industrial growth was further encouraged when a listing of lots for potential industrial sites, of more than 50 acres, was compiled by the Bonneville Power Administration in the 1960's. Sites included many in the lower Green River Valley. By the late 1960's, the land use in the Valley had shifted from a dominance of agricultural to a wide variety of industrial and commercial uses. By the early 1970's, farming in the Valley was substantially reduced, much of the land was either left vacant or converted to industrial/commercial use. During the 1980's, land use in the Valley further diversified to include not only industrial, manufacturing, and warehousing uses, but service industries and commercial offices. Today the Green River Valley is primarily classified as industrial with some residential, commercial, and farmland areas.

1.5 EXISTING HOWARD A. HANSON DAM PROJECT

1.5.1 Authorized Project Purposes

The project is currently operated to provide winter and spring flood control and summer low flow augmentation for fish. Two other uses are also authorized: (1) irrigation water supply, and (2) municipal and industrial water supply. The project has never been operated for water supply; and irrigation is no longer a priority in the Valley. Thus, the two functional uses of the HHD project are flood control and low flow augmentation.

1.5.2 Original Project, Sponsor and Cost Sharing

Farmers historically had been searching for ways to reduce flooding in the Green River Valley. In June 1936, the Flood Control Act was passed authorizing a preliminary examination and survey for flood control. In November 1937, a public hearing was held jointly by the Department of War and Agriculture in Seattle. Local interests stressed the need for flood control. A survey report was ordered by the Chief of Engineers, Seattle District Corps in June of 1938. In October 1948, the Chief Engineer approved the submission of a combined navigation and flood control survey report. Different possible means for flood control were considered including channel improvements, storage, or some combination of the two. After detailed studies and cost estimates, rectification through channel improvements alone was disregarded as a possibility.

The authorization for the dam, initially named Eagle Gorge Reservoir, came from the Rivers and Harbors Act of 1950 (Public Law 516, 81st Congress, 2nd Session, 17 May 1950). In July 1951, President Truman issued a directive against all new starts for planning or construction unless certified as necessary for national defense. In November 1951, a brief was forwarded stating Seattle's industrial area was already occupied and that expansion by the Government, as well as private industry, must be in the Green River Valley, with the requested flood control. On May 14, 1952, the President approved the project. The project was renamed Howard A. Hanson Dam by the Act of Congress July 28, 1958 and signed by the President August 6, 1958. The dam was named after Howard Hanson, a prominent attorney and civic leader, in recognition of his active sponsorship of the project. Construction was complete in 1962. HHD is a 100% federally funded and operated project.

1.5.3 Site Description and Selection

Three sites were investigated by the Corps District Engineer in 1933. This investigation concluded that a dam six miles upstream from Auburn was not feasible due to potential loss of salmon spawning area. Of the proposed sites, Eagle Gorge was found to be the most cost effective and the only site situated far enough upstream (beyond a man-made upstream barrier for anadromous fish runs) to serve the combined function of flood control, low flow augmentation, irrigation, and water supply.

The HHD project is located on the Green River 35 miles southeast of Seattle, 25 miles east of Tacoma, seven miles upstream from Kanaskat. The dam itself is at river mile 64.5. The project lies entirely within the City of Tacoma municipal watershed and is closed to the public.

The Green River Valley, at the dam site, consists of a post-glacial canyon. Based on geologic mapping, pre-construction investigations, and observations during construction, Corps geologists postulate the presence of a deeper, older buried channel immediately north of the dam, beneath the dam's right abutment. The buried channel is deeply incised in rock and was filled, eroded, and partially refilled with glacial, fluvial and lacustrine related material. Subsequently, the north wall of the valley collapsed, creating a large rock slide mass that covered the older valley floor and forced the Green River against the south valley side where the present canyon is located. Landslide debris overlies portions of the bedrock surface at the dam site, and forms the upper portion of the right abutment. The left abutment is bedrock.

1.5.4 Original Project Description and Operation

HHD is a subsidiary earth-filled structure composed of rolled rock fill, sand and gravel core, drain zones, and rock shell protection. The embankment is 235 feet high and 500 feet long and has an inclined core of sand and gravel material. The dam is 960 feet thick at the base decreasing to 23 feet thick at the crest. The total length of the dam is 675 feet.

The intake structure includes trash rack bars, a deck for debris removal, one tractor type emergency gate, and gate hoist equipment located in the gate tower.

The outlet structure consists of a gate tower and intake structure with two tainter-type gates, a concrete horseshoe-shaped outlet tunnel, a gate controlled bypass, and a stilling basin. No fish passage facility was included in the original project design due to the fact that the Tacoma Diversion Dam, located downstream of HHD, already blocked upstream and downstream migration of fish.

The 900-foot-long, 19-foot-diameter flat bottom horseshoe-shaped outlet tunnel passes normal flow released for project regulation. The tunnel is controlled by two 10-foot-wide by 12-foot-high regulating tainter gates at the bottom of the reservoir pool. Low-flow releases during the summer conservation period are made through a 48-inch bypass intake located about 35 feet above the bottom of the pool. This outlet has a capacity of approximately 500 cfs at maximum conservation pool.

The gate controlled spillway is anchored in rock on the left abutment and in a concrete monolith adjacent to the embankment on the right. The spillway is a concrete ogee overflow section with two 30-foot-high by 45-foot-wide tainter gates to control major flood flows and prevent overtopping of the dam. The lowest elevation of the gates is 1,176 feet. The downstream chute has a curved alignment and is paved for a distance of 712 feet downstream from the weir. The tainter gates permit storage to 1,206 feet without spillway discharge. The maximum spillway discharge is 115,000 cfs at the spillway design flood pool elevation.

The reservoir (conservation pool) extends approximately seven miles eastward from the dam along the main river channel and four miles northerly up the main tributary of the North Fork of the Green River. The reservoir is normally maintained at minimum level (about elevation 1,070 feet) from the end of October to the end of March to provide flood control storage space. The reservoir provides 106, 000 ac-ft of flood control storage at elevation 1,206 feet. Beginning around April the reservoir is to filled to a maximum pool elevation of 1,141 feet to provide summer and early fall low flow augmentation.
At full conservation pool level, the summer /fall reservoir impounds 25,400 ac-ft with a surface area of 732 acres. The reservoir operational goals are to store excess storm flows, prevent winter and spring flooding and provide additional water from storage for low-flow periods in the summer and fall for conservation of fish resources.

There are four buildings on the project site.

- The Administration Building is located in a fenced compound on the right dam abutment.

- The Fuel Dispensing Station and Flammable Materials Storage Building is located approximately 200 feet north of the Administration Building on Access Road A.

- The Storage and Staging Quonset Hut is adjacent to Access Road No. 3, approximately 472 feet south of the intake structure.

- The Turbidimeter installation is located seven miles upstream from the dam.

The project site includes various gravel surfaced roads which provide access to the dam, stilling basin, intake structures, and the reservoir.

Flows are regulated manually by adjusting gate controls at the dam with direction from the Corps Water Management Section. The reservoir is kept as low as possible (essentially empty) during the flood season so that runoff from the watershed above HHD can be impounded as needed. The highest pool elevation attained was 1,183.5 feet, in 1996. To date, it has not been necessary to use the spillway. The reservoir is drawn down, in normal years, to an elevation around 1,070 feet by November 1st to provide full flood storage capacity in the reservoir. During the winter months, flow is regulated to a maximum of 12,000 cfs at Auburn during flood events.

Normal river flows pass through the outlet tunnel in the dam's left abutment. When the river flow reaches flood stage, projected at 12,000 cfs at Auburn, discharge from the dam is reduced and water is impounded in the reservoir. As river flows return to normal following a flood, the water impounded in the reservoir is released at a rate which ensures safe discharge within channel capacity in the downstream area and minimizes damage to levees from sloughing during evacuation of storage. Flood control operations are in accordance with parameters of the project's congressional authorization, so there is little flexibility to operate for other purposes during the flood season.

Floating debris is collected during periods of high water by three stationary booms at the dam. Larger floating or sunken debris usually passes through the outlet tunnel and passes downstream, although it may lodge against the intake structure trash rack. This debris is removed periodically from the trash rack. The debris which is collected at the stationary booms is removed when reservoir conditions permit and is towed by barge to temporary holding areas. When the conservation pool is at its maximum elevation the debris is towed from the temporary holding areas to disposal areas. When water conditions permit, the reservoir is raised three to five feet above the normal full conservation pool to facilitate movement of debris to the upper holding areas. When the pool level has been lowered and ground conditions permit, the booms and salvageable material are removed. Generally, the rest is sawed and piled by bulldozers for burning. Recently, some of the collected debris has been used in environmental restoration projects. This practice will increase in the future.

Throughout the years that HHD has been in operation, many downstream changes have occurred in area land use, recreation, fisheries, resource allocation, and environmental awareness. All of these external influences have resulted in operational changes and manipulations, primarily manifested in the refill timing of the conservation pool and

instream flow needs. The intent of operational changes is to provide the most responsive and equitable utilization of water among sometimes competing resource users.

1.5.5 Subsequent Project Structural Modification

The first significant flood pool, which briefly attained elevation 1,161 feet, occurred in February 1965. At that time, a spring abruptly broke out at elevation 1,134 feet about 350 feet downstream from the downstream right abutment toe. The spring was controlled by a gravel blanket supported by a crib wall. In 1968, a drainage tunnel was constructed at elevation 1,100 feet and extending 640 feet into the right abutment. Twelve relief wells were drilled to intersect and extend 20 feet below the tunnel floor. This system appears to have adequately controlled abutment leakage during the flood pools experienced to date.

Numerous piezometers have been installed within the dam embankment and abutments; geotechnical instrumentation is concentrated on the right abutment. The piezometers are monitored regularly, and a program of maintaining, upgrading, and installing new instruments has been implemented since completion of dam construction, and continues to the present.

The Corps performed a seismic analysis of the intake tower. Results of the analysis indicated that the tower would not withstand the maximum design earthquake at the project site. The Corps made structural modifications to remedy that situation.

1.5.6 Subsequent Project Operational Changes

The management of HHD is a continually evolving processes within the constraints of its authorized purposes. Since the completion of the project in 1962 the population of the Green River valley and the entire Puget Sound region has increased. Land use in the lower valley has shifted from primarily rural and agricultural to a mix dominated by urban and industrial uses. The role of tribal governments, state, and local agencies in the management of Green River and its resources has significantly changed. The Corps has undergone a general shift from a rigid operation procedure to a more adaptive management approach and is currently involved with other agencies in their resource management activities.

Flood control is clearly the first priority of the operation and management of HHD during the winter flood season and is largely inflexible. The flexibility in the Congressional authorization lies in the operation of HHD after flood season. Water management is more complex after the end of the flooding season. During the spring, the project switches from its primary role (flood storage) to its secondary role (conservation storage for low flow augmentation). Each year's water control strategy begins with the spring snowmelt. The formation of the annual water control plan typically begins in March, though the actual date depends on seasonal and weather factors. During the switch from flood to conservation storage, the amount of water released from HHD is reduced, below the level of inflows, allowing the reservoir to refill.

Conservation storage operation involves a dynamic set of daily, weekly, and seasonal adjustments to releases from the Project designed to meet the variety of needs for water resources in the Lower Watershed. Providing the maximum range of options and maintaining the highest level of flexibility during conservation storage are major elements of the current operational strategy. Adjustment of outflows in response to several external factors are necessary. Discharges are adjusted to reflect changing weather and inflow conditions; to provide additional instream flows to protect fisheries resources; to respond to community requests for specific instream flows for community activities (such as streambank clean-up programs); to provide white water recreation opportunities; and to respond to emergency requests for instream flow changes (such as during search and rescue operations).

The current reservoir refill and conservation management strategy was developed as a result of drought conditions in 1992 that resulted in the lowest April through June inflows into the Project since the completion of HHD. The management strategy has been continued because of its success. Reservoir refill begins generally in mid-April. Refill timing and release rates are based on target instream flows that are adjusted yearly in response to the existing weather conditions, snowpack, the amount of forecasted precipitation and biological input from fisheries and other resource managers. Refill is conducted in a way that attempts to provide optimum flows to downstream fisheries (e.g., wild steelhead that are spawning in the lower river at that time) while balancing the need for refilling of the reservoir to a full conservation pool elevation of 1,141 feet before inflow recedes too low and minimizing entrapment of downstream migrating salmon and steelhead smolts as river flows recede. The full pool level is required to provide the maximum flexibility in relation to instream flow augmentation later in the season.

Problems with this current operating strategy arise in the conflict between management of different fish species and areas of the watershed. High flow releases from HHD may increase the survival of juvenile salmon outmigrating from the Upper watershed. If steelhead in the Lower river spawn during these high flows, the steelhead eggs may be dewatered as flows subsequently drop during the 50-day steelhead egg incubation period.

These water management conflicts are partially a result of a lack of available information on the flow requirements for all species that are found in the Green River Watershed. As more is learned about the resource needs of the fishes of the Green River, this information can be incorporated into the present adaptive management strategy implemented by the Corps for the operation of HHD. This process is dynamic and requires ongoing inter-agency coordination before and during refill, and during summer low flow augmentation. The strategy will continue to evolve as experience is gained, coordination and forecasting techniques improve, and resource needs change.

1.5.7 Changes Resulting From Current 1135 Project

In 1996, under authority of Section 1135 of the Water Resources Development Act of 1986 Seattle District Corps of Engineers conducted a study of potential modification of HHD to improve fish and wildlife habitat within the reservoir and restore natural river functions for fish habitat improvement. The resulting recommended plan was approved for implementation in May 1997.

In general, the selected alternative involves providing 5,000 ac-ft of additional summer conservation pool storage during drought years once every 5 years on average; changes in operation for fish flow augmentation; physical habitat improvements in the reservoir area; and minor modifications to the intake tower. The proposed project modifications are consistent with the project purpose of low-flow augmentation, and provide a positive benefit to fish and wildlife resources.

Six categories of alternatives were examined for accomplishing the goal of restoring and improving fish and wildlife. The study analyzed the benefits and impacts of:

- various pool sizes (additional storage);
- storage frequencies;
- storage refill strategies;
- release schedules; and
- in-reservoir improvement opportunities.

The specific mix of alternatives selected from the above five categories is based on the overall criteria of maximizing improvement opportunities while minimizing potential impacts. The proposed modifications consist of:

- an additional summer storage volume of up to 5,000 ac-ft (6-foot pool raise) during dry years — expected to occur once every 5 years on average;
- an adaptive storage frequency that initially assumes additional storage during drought conditions — once every 5 years on average, with the flexibility of more frequent storage as more information is gained about the effects of juvenile salmonid survival;
- an adaptive reservoir refill strategy (the current operational storage strategy) which allows maximum flexibility to adjust refill rate and release of flows downstream to meet a variety of needs;
- an adaptive release schedule that initially assumes 5,000 ac-ft of additional storage will be used to maintain a minimum downstream flow of 250 cfs at the USGS gage on the Green River near Auburn, with the flexibility to address conditions which may change from year to year (e.g., an outbreak of disease, decline of particular stock of fish, short-term precipitation patterns); and
- a selection of in-reservoir habitat enhancements based on the cost effectiveness and incremental cost analysis.

Opportunities to improve fish and wildlife habitat conditions in the reservoir include establishing streambank vegetation and greater plant diversity in the reservoir tributaries, placement of floating islands in the reservoir, and providing fish passage to the upper reaches of selected tributaries.

1.5.8 Concerns Resulting From Project Operation

The complex geologic conditions in the right abutment create a complicated reservoir seepage problem which is not totally understood from the standpoint of hydrogeology. At least two major aquifers are present with the possibility that others may exist. The lower aquifer with base elevation about 1,000 feet is found within the buried valley's alluvial materials. Pervious zones in the overlying glacial and slide materials form the upper aquifer, the probable source of the seepage problem on the downstream slope of the right abutment.

Considering the steepness of slopes surrounding the reservoir, producing harmful turbidity, the reservoir has been remarkably free from slides other than small failures of colluvium. Between mid-May and mid-June, slides from apparent saturation are noticeable between Charley Creek and the upper reservoir. These slides have not affected the HHD or reservoir operation, but may affect future debris removal. Since filling and operating of the reservoir one significant landslide has occurred. This was a rotational failure in early December 1995 following a period of intense rainfall. The slide occurred 1.7 miles upstream of the dam. The slide caused no damage to HHD. See Appendix E, Geotechnical Considerations.

Corps philosophy in dam design is that dams capable of placing human life at risk or causing a catastrophe should they fail, are to be designed to safely pass an inflow design flood computed from probable maximum precipitation (PMP) over the watershed upstream from the dam site. The PMP for the HHD area has recently been revised upward from that in existence at the time of original design. Recent review of the impact of the revised PMP and other original design assumptions has raised some issues regarding performance of the spillway and flood control outlet works during extremely large flood inflows on the order of those generated by a PMP. These issues are currently being evaluated by the Corps. In no way should these issues be construed to reflect negatively on the overall safety or operational adequacy of HHD.

A localized low area included in the original design and construction of the project exists upstream along the left abutment near full pool. It may be necessary to construct an earth embankment or other type of closure section in this area to prevent overflow during extreme inflow events. If so, the new closure section will be designed in accordance with current Corps standards and construction would occur outside of the additional storage implementation.

Some deviation from normal operation and regulation can be expected during construction periods, either downstream of the project or in the reservoir, during inspection of gates

and other operational equipment, and during operations and testing for the fishery that may be performed from time to time by the Corps or other interests. There have also been occasions in the past when special requests have been received from law enforcement agencies for reduced flows to search the river for drowning victims. These deviations will be considered on a case-by-case basis and any regulation coordinated between all parties concerned.

1.6 FACTORS POTENTIALLY AFFECTING EXISTING PROJECT

1.6.1 Project Operation Problems

a. Debris. Winter floods bring floating debris down from the upper reservoir area. Debris is mostly in the form of wind-blown tree branches and entire trees. The debris is held behind the log booms until the temporary pool drops. During the spring, the debris floats again as the pool is raised for the low-flow augmentation season. Operators collect the debris using small boats. A preferred storage area is used that requires a temporary pool raise of 3 to 5 feet above the elevation of 1,141 feet. There usually is no problem with this routine operation; however, a more formal procedure should be established for the retention and drawdown of this water. This operation is intended to provide a trash-free reservoir; however, some floating debris can make it under the log booms and should be considered when designing physical features for environmental improvements.

b. Downstream Fish Passage. Young (juvenile) salmon (coho and chinook) and steelhead that are moving downstream to lower river rearing areas or migrating to saltwater (Puget Sound) must pass through one of two HHD outlets, the flood control tunnel or the low flow 48 inch bypass pipe. The flood control tunnel (1,035 feet elevation) is regulated by 2 large radial gates that control the discharge by presenting a barrier to flow. At flows less than 500 cfs, the 48 inch bypass is used (1,069 feet elevation). Refill of the project typically occurs between early April through June when the pool is filled from low pool, 1,070 feet elevation, to the full conservation pool, 1,141 feet (plus 3 to 5 feet for debris removal). This spring refill coincides with the main out migration period of these juvenile fish. As the pool fills the outlets are submerged to depths from 35 to 112 feet. As inflow to the reservoir recedes, outflow from the dam is routed to the 48 inch bypass pipe.

Current survival of juvenile salmon and steelhead migrating through these two HHD outlets is estimated between 5-25% (estimated from fish passage model and on-site monitoring – US Fish and Wildlife Service). The low survival rate is primarily a function of two factors — 1) the spring refill of the reservoir submerging the dam outlets; and 2) low survival of juveniles as they pass through the outlets. From studies at other Corps and public utility storage projects, it has been found that these juvenile fish require a near surface outlet (typically 5-20 feet depth) with a high discharge capacity outlet (exact volumes depend on site conditions). Therefore, at a time when these fish need high flows and a shallow outlet, the project is reducing outflow (refill) and creating a deeper outlet (from 35-112 feet depth). The reservoir refill and resulting deepwater outlets delay and

entrap the juvenile migrant fish (estimates range from 40-70% of all fish are entrapped). Fish that are delayed or entrapped beyond a certain time (biological window of opportunity) will not migrate to saltwater and do not contribute to the returning adult population. During low flows, fish that "sound" (dive) to reach the deep outlets experience high mortality from impacts at sharp bends or turns within the 48 inch bypass. Direct mortality in the bypass pipe can range from 1-100% depending on the amount of flow, water temperature, pool elevation, and time of year.

1.6.2 Project Operations Constraints

a. Flood Control. The entire authorized space of 106,000 ac-ft is required for flood control. This means that there can be no storage for other purposes during the flood control season. Any reservoir water remaining in the fall must be released prior to the start of the rainy season. In the spring, the gradual accumulation of storage for conservation purposes must not overlap with storage space needed for flood control. New construction activity in the forebay must consider a plan to draw the reservoir down from elevation 1,070 feet or construct a barrier in the pool and pump water out in order to work in dry conditions.

b. Conservation Pool. The authorized conservation pool is elevation 1,141 feet. A change in authority must be obtained before water is stored above elevation 1,141 feet for extended periods: in recent years the pool has been stored above 1,141 feet for short periods (2 weeks or less) to clear debris. The use of the conservation storage to provide a minimum flow of 110 cfs is intended to have 98% reliability. This is a constraint on providing instream flow in excess of 110 cfs because drawdown below the guide curve would reduce the reliability of future flows at 110 cfs. Water for additional low-flow augmentation must be stored above the 1,141-foot guide curve.

c. Two Outlets. There are only 2 outlets that could be used to pass downstream migrating fish (see Paragraph 1.6.1 b.). The invert of the spillway is at elevation 1,176 feet and cannot be used for routine operations. This leaves the flood control tunnel, elevation 1,035 feet, and 48-inch bypass, elevation 1,069 feet. The flood-control tunnel has a modest slope; however, the entrance has a vertical plunge which is undesirable for fish passage. The 48-inch bypass also has a steep plunge and narrow bend which is undesirable for fish passage. Fish passage mortality can only be reduced with extensive modification to the intake structure.

d. Water Quality. The Tacoma Water Division diverts unfiltered water at its diversion headworks downstream. The Corps has an agreement with Tacoma to provide clean water to the extent that the inflow allows. A small "turbidity" pool in the forebay covers sediment that would cause turbid water if the river was in a free-flow condition through the reservoir. The accumulation of stored water must use elevation 1,070 feet as the starting point for zero storage.

e. Section 1135 Project. Implementation of the Section 1135 project is scheduled to begin in 1999 with the construction of approved fish and wildlife measures. These restoration measures will include the installation of over 250 logs and/or rootwads for fish and waterfowl habitat improvements, fertilization of 24 acres of meadow habitat, planting of 48.5 acres of water tolerant plants, and minor improvements to the intake tower for maintenance access. A test-pool to store the additional 5,000-ac ft, to elevation 1,047 feet, should occur in 1999 and will be used to evaluate the success of the restoration projects. Following the implementation of the restoration measures, HHD would be authorized and available to supply the additional 5,000-af in any year meeting the adaptive management storage criteria. The 5,000-af will be used to maintain summer flows of 250 cfs at the USGS gage at Auburn.

1.6.3 Treaty Tribes Rights, Agreements, Corps Trust Responsibility

The Muckleshoot and Suquamish Indian Tribes are involved on many levels in the Green/Duwamish River Basin. The northern section of the Muckleshoot reservation lies within the Middle Green River Basin. The Muckleshoot Tribe planning department administers land use and environmental policy within the boundaries of the reservation. The Muckleshoot Tribe has co-management responsibilities with the State of Washington for the fisheries resources within its usual and accustomed fishing areas, which include Lake Washington, the Green, Cedar, and upper Puyallup/White River basins. The Suquamish Tribe shares in this co-management within the Duwamish estuary and Elliot Bay. Fishing, hunting, gathering of native plant material, and access to the river, wetlands, and forests of the basin above and below HHD provide essential economic and spiritual sustenance to the Muckleshoot and Suquamish people (USFS, 1996).

As co-managers of anadromous fish resources, the Muckleshoots are directly involved in the operation of the existing HHD project. Technical staff represents the Tribe each year during pre-season forecasting, seasonal refill, and summer flow augmentation coordination of reservoir operations. Their input along with the Washington Department of Fish and Wildlife has dramatically altered the form of refill and release operations. In addition to input to project operations, the Muckleshoot Tribe has become the primary manager of fish resources in the Upper Green River. In the last few years, the Muckleshoots have taken over most stocking of hatchery reared juvenile fish above HHD. The stocking of juvenile fish is considered a first step in recovery and restoration of anadromous salmon and steelhead above HHD. Since HHD was not built for juvenile fish passage, project refill operations have seen a dramatic shift to try and accommodate the passage of these juvenile migratory fish. The Muckleshoots are leading recovery efforts and consider HHD and existing project conditions as the impediment to permanent recovery. Lastly, the tribe and state, as co-managers of harvest, have the most direct impact on the numbers of adult salmon and steelhead that ultimately spawn in the river below HHD and/or that could reach the dam for passage above the dam.

The City of Tacoma, sponsor of the HHD AWS project, has a unique and active relationship with the Muckleshoot Indian Tribe. Since the 1970's, the City has been

actively involved with the Muckleshoot people in a negotiation to rectify past fish and wildlife damages related to construction and operation of the Tacoma Diversion Dam. The Diversion Dam was built at RM 61, 3.5 miles downstream of HHD, in 1911-1913 and was the first complete barrier to adult salmon migration. Adult salmon have not been released above the Diversion since 1913 and steelhead have just begun to be re-introduced since 1992. This low head dam is not considered a barrier to downstream fish passage of juvenile salmon and steelhead. A few juveniles are killed when they are entrained into the existing water diversion intake: a new screen and juvenile bypass will be built under Tacoma's Second Supply Water Rights project, which also includes construction of a pipeline (Pipeline No. 5) from HHD through south King County to Tacoma. The capacity of the pipeline will be approximately 62 mgd.

In addition to this process of reclaiming historical resources, the two parties have recently signed a mitigation agreement (Agreement) where all past and future claims by the Muckleshoot people have been settled through a combination of financial and natural resource remedies. Included in this agreement are several planned provisions important to restoration of anadromous fish to the Upper Green River. These provisions include: 1) a Fish Restoration Facility – a "naturalized" rearing facility for re-establishing salmon and steelhead; 2) a fish ladder and adult collection facility available to provide adult fish passage above the Diversion Dam or around the Diversion and HHD; and 3) higher, guaranteed minimum flows to protect instream resources.

The Muckleshoot/Tacoma Mitigation Agreement developed new, higher minimum flows (at Auburn) over Washington State Department of Ecology requirements. For a particular year, instream flows are set by the summer month conditions, beginning on July 1. The summer month flow conditions as stated in the Agreement are, "*For Wet Years the minimum continuous instream flow shall be 350 cfs. For Wet to Average Years the minimum continuous instream flow shall be 300 cfs. For Average to Dry Years the minimum continuous instream flow shall be 250 cfs. For Drought Years, the minimum continuous instream flow shall range from 250 to 225 cfs, depending on the severity of the drought.*" Flows at Auburn must be at or above these requirements before Tacoma can divert water for their Second Supply Water Rights project.

As part of these negotiations and the Agreement, the City of Tacoma became sponsor of the HHD Section 1135 Restoration Project whereby 5,000 ac-ft of water is stored, initially, in drought years to provide additional augmentation for meeting the higher minimum flows. The Corps is not an active party to the Agreement, however the Agreement does reference pre-defined storage zones in the existing reservoir. The Corps is in a position to maintain support to both parties and typically acts as a facilitator in water management discussions on the Green River.

The Corps of Engineers, like Tacoma, has an active relationship with the Muckleshoot Tribe. Unlike Tacoma, the Corps has a federal trust responsibility with Native Americans. This trust responsibility puts more stringent requirements on Corps actions as far as

protecting the rights and resources of Native Americans, especially those related to anadromous fish.

1.6.4 Regional Water Supply Planning

To meet the increasing demands for water and with limited opportunities for developing additional new water supplies, utilities in Washington have found it necessary to plan and manage resources in a more water efficient and comprehensive manner. This approach allows utilities to more effectively manage issues such as droughts, state regulations, and the high development costs of new projects. The existing project, while authorized to provide up to 20,000 ac-ft of storage for water supply, is currently not operated for, nor is reservoir space used to, directly provide water supply. By 1999, the proposed 1135 storage project will be implemented which provides 5,000 ac-ft of storage (from reservoir elevation 1,141 to 1,147 feet) for low flow augmentation, initially during dry years which are assumed to occur once every 5 years on average. Through adaptive management the storage and use of this LFA water can be as often as every year.

1.6.5 Fish and Watershed Resource History, Management, and Outlook

Eight anadromous salmonid species historically or currently use the Green River system. These native species include chinook, coho, chum and sockeye *salmon (Oncorhynchus tshawystscha, O. kisutch, O. keta, O. nerka*), steelhead and sea-run cutthroat trout (*O. mykiss, O. clarki clarki*), Dolly Varden and bull trout (char; *Salvelinus malma, S. confluentus*). Races of salmon and steelhead historically or currently present include spring, summer, and fall chinook, winter and summer steelhead. Native, resident salmonids include rainbow and cutthroat trout and mountain whitefish (*Prosopium williamsoni*). Additional information on life-history types and stock status is discussed in Appendix F, Part One, Section V: Downstream Migration of Anadromous Salmonids through the Lower Green River.

The Green/Duwamish River watershed is a fundamentally altered ecosystem. To date, 97% of the Green/Duwamish River estuary has been filled, 70% of the flows of its former watershed have been diverted out of the basin, and about 90% of the once-extensive floodplain is no longer flooded on a regular basis. The Green/Duwamish River today is still an important producer of fish and wildlife resources, especially anadromous fish (salmon, steelhead, sea-run cutthroat, and char). However, plant and animal populations, including anadromous fish, continue to decline due to increasing human activities within the watershed.

The changes to the Green/Duwamish watershed are a result of a continuing series of man-made actions with much of the recent degradation resulting from ecosystem function and process changes associated with construction and operation of HHD. HHD has created two basic changes to the system: 1) it has added a second physical barrier that has further disconnected the upper and lower river (the implementation of MIT Agreement will remove the Tacoma Dam); and 2) altered the hydrologic regime of the river which has

resulted in dramatic reductions in flooding of the historic floodplain and constrained the river into a single channel form. The disconnection and flow regime change has severely reduced the capacity of the watershed to produce salmon and steelhead. Specific factors that limit anadromous fish abundance in the Green River related to HHD are: 1) the lack of fish passage through HHD disconnecting the upper watershed, 221 square miles, or 45% of the entire basin; 2) disconnection of the floodplain and important rearing and spawning habitat from the lower mainstem river; and 3) loss of mainstem spawning gravels.

HHD was originally authorized and built without fish passage facilities. Above the dam there are 221 square miles of watershed area and 106 stream miles of historic salmon and steelhead habitat. Different authors have estimated that this Upper River watershed area could produce a run of over 30,000 adult salmon and steelhead (see Appendix F, Part One, Section 2). In 1929, the State Department of Game estimated that 90% of the coho salmon and steelhead habitat in the Green River could be found above the Tacoma Diversion Dam (sic. HHD) (Fuerstenberg et al. 1996). After inception of the HHD project, beginning in 1982, anadromous fish (coho salmon, chinook salmon, and steelhead) have been re-introduced into the upper watershed under state and tribal fish management. As discussed in Paragraph 1.6.3, the City of Tacoma/Muckleshoot Mitigation Agreement will/can provide permanent upstream fish passage around the Tacoma Dam and HHD along with a Fish Restoration Facility to provide rearing conditions to restock the upper watershed.

As discussed in Paragraph 1.6.1b, current survival of juvenile salmon and steelhead migrating through HHD is estimated between 5-25%. (estimated from fish passage model and on-site monitoring). Because of these low juvenile survival rates through the existing project, restoration of self-sustaining, naturally reproducing fish stocks above HHD is highly unlikely under existing conditions. Tacoma currently operates a temporary adult fish trap at their barrier dam (under the Muckleshoot Agreement a permanent fish ladder and trap will be built). Since 1992, returns of adult fish have ranged from 30 to 150 steelhead and from 50 to 300 adult salmon. Trapped adult steelhead are either released above the dam for natural spawning, or a selected few are used to rear fry for outplanting in the upper watershed to try and maintain the small run. Adult salmon are not currently released above the dam, releases into the Upper watershed may begin next year. Because of the uncertainty of restoring these fish runs, neither the state nor the tribe have developed comprehensive management plans, including adult spawner escapement goals, for juvenile and adult fish.

Large, diverse, natural spawning (as opposed to hatchery spawned) populations are considered critical to the long-term survival and production of wild and hatchery runs of salmon and steelhead through maintenance of genetic diversity. The National Research Council (1996) summarized the need for these healthy natural populations as "unless enough fish are able to spawn, there will not be enough fish produced to compensate for all the sources of mortality imposed by human activities and to provide sustainable runs of wild salmon. Increasing the number of adult that return to spawn (escapement) will

enhance opportunities for evolution of genetic diversity through colonization, straying, and competition, and will bolster nutrient input to streams."

Besides their importance to genetic diversity and the tribal, commercial and recreational fisheries, natural spawning anadromous fish have been recognized as a critical link in aquatic foodwebs in the Pacific Northwest. They are considered "keystone" species upon which producers and consumers from the bottom to the top of the food chain depend (Wilson and Halupka 1995). Rearing in the rich-ocean waters, adult salmon return to nutrient poor streams with a wealth of ocean nutrients, enriching the food-web from primary producers to top carnivores. At the top of the food web, at least 22 species of wildlife, including black bear, mink, river otter, and bald eagle, feed on salmon carcasses (Cedarholm et al. 1989). At the base of the food web, salmon carcasses provide a significant, if not major amount of nitrogen to streamside vegetation as well as large amounts of carbon and nitrogen to aquatic insects and other macroinvertebrates (Bilby et al. 1996). Some researchers suggest that there may need to be a minimum escapement level for natural spawners to maintain the integrity of the aquatic food chain: these would be higher than established escapement goals required to maintain salmon populations (Bilby et al. 1997).

Abundance of natural spawning salmon and steelhead in the Lower Green River has severely declined in the past 50 years, not unlike salmon populations throughout the Pacific Northwest. Fuerstenberg et al. (1996) presented a 50 year-comparison between natural spawner counts from 1938-1942 and 1987-1991: in the late 1930's (after completion of Tacoma Diversion Dam) over 110,000 chinook, chum coho, pink salmon and steelhead were counted while in the late 1980's over 27,000 chinook, coho, chum salmon and steelhead were counted. Both native pink and chum salmon stocks are considered functionally extinct. The chum run is being re-built with stock from other South Puget Sound rivers. Since the 1930's counts, the coho salmon, chinook salmon, and steelhead spawner counts are reduced by 66, 82, and 64%, respectively. Most of the natural salmon production has been replaced by hatchery spawned and reared fish. Of the seven original anadromous stocks of salmon, steelhead, and cutthroat trout, only one stock, winter steelhead, is considered native, wild and healthy.

Local salmon and steelhead harvests in the Green/Duwamish are co-managed by the Washington Department of Fish and Wildlife and Muckleshoot and Suquamish Indian Tribes. These harvests include commercial, sport, subsistence and cultural uses. Harvest rates can vary widely year to year based on ocean survival conditions, international harvest agreements between Canada and U.S interests and freshwater rearing conditions., Escapement goals and harvest rates vary among fish species and between hatchery or natural origin fish. The Lower Green River (below the Tacoma Dam) escapement goals required for natural spawning fish to maintain each run (self-sustaining) is: 1) 8,700 coho salmon; 2) 5,700 chinook salmon; and 3) 2,000 winter steelhead: no escapement goals have been established for the Upper Green. The Green/Duwamish River long-term average harvest rate for coho salmon is 67% (wild and hatchery combined, 1977-1992), for chinook salmon it is 55% (wild, 1974-1991), and for winter steelhead it has averaged

35% (1977-1992) (Grette and Salo 1986; SASSI 1993). These harvest rates provide one more mortality factor influencing the number of adults returning to spawn that are required to maintain existing runs or that would be necessary for recovery and restoration of natural runs above the Upper river man-made barriers (Tacoma Dam and HHD). Recent harvests (1992-1996) have been greatly reduced from the long-term average; most biologists believe that reduced ocean survival resulting from climatic changes (El Nino) is the main cause for the reduced fish numbers. These reduced numbers of returning adults have resulted in the closure of commercial salmon harvesting in most of the saltwater along the entire west coast over the last 3-4 years. The harvest rates for wild salmon and steelhead may remain reduced in the future, the Washington Department of Fish and Wildlife is developing a wild salmonid policy that could increase the escapement of natural spawners.

Hatcheries have been used for more than 100 years in attempts to mitigate the effects of human activities on salmon and to replace declining and lost natural populations. In addition, they have also been used to expand upon natural production to provide additional harvest opportunities. As a result, a major proportion of salmon populations in the Green River now consists largely of hatchery fish. Federal and state fish and wildlife agencies are considering major changes to many traditional hatcheries and how new hatcheries are managed and operated throughout the Pacific Northwest (NRC 1996; WDFW 1997). The change in emphasize involves an integrated hatchery program of planning, management, and operation to minimize impacts of hatchery fish on natural salmon and steelhead production and to maximize recovery of depressed populations. The Muckleshoot/Tacoma Fish Restoration Facility (see Paragraph 1.6.2) follows this integrated approach and is planned primarily as a "restoration" facility to assist in re-introduction and recovery of Upper Green River salmon and steelhead.

As this document is being written, Green River coho salmon, chinook salmon and steelhead are currently being reviewed for proposed listing under the Endangered Species Act (ESA). These fish runs are not reviewed as single watershed but are included in a larger regional group – the Puget Sound Evolutionary Significant Unit. In 1996, the NMFS made a preliminary review that Puget Sound chinook are considered "likely to become endangered" in the near future. A final review and potential proposed listing for chinook is scheduled for early 1998. Conditions for Puget Sound (and Green River) chinook have not improved since this preliminary review and, therefore, it is likely that they will be proposed for listing. To protect and recover Green River chinook, the listing could have strong implications for harvest management and operation of HHD. Listing of Green River chinook could include requirements for reduced harvest for an unknown period of time and providing access to historical habitat areas which would require improvements for fish passage at HHD. The standard applied by NMFS for new downstream juvenile fish passage projects is 95% survival or greater.

1.6.6 Forest Management Practices

The Upper Green River watershed is owned by many private and public entities. Most of the private landowners are timber companies, including Weyerhaeuser Corporation; Champion International Corporation; CITIFOR; and Plum Creek Timber Company. Other landowners include Burlington Northern Railroad; Department of Natural Resources; King County METRO; U.S. Forest Service (USFS); and Tacoma Water Division. Nearly all of the forest lands near the HHD Reservoir and the upper Green River are owned by the Tacoma Water Division. Consequently, this section will only briefly discuss forest management by other owners, with greater detail provided on Tacoma's forest management.

a. Private Management. Nearly all of the lands in the Upper Green River Watershed are managed for timber production. The Washington Forest Practices Act (RCW 76.09, Rules WAC 222-22) was passed in 1992. This Act prompted the watershed owners to form a watershed analysis team that established specific forest practices rules for the Green River watershed. The rules provide the landowners predictability in planning for future harvest as well as provide guidance on riparian areas and identified sensitive areas, which are to be avoided by new road construction and during timber harvest. The Department of Natural Resources administers the rules.

b. Forest Service. The Forest Practices Rules also apply to public owners, assuring that public resources are being protected using the best available scientific information. In recent years, wildlife habitat management has been a driving force behind forest management in Northwest national forests. The Mount Baker/Snoqualmie National Forest prepared a management plan geared toward conservation of the northern spotted owl (*Strix occidentalis*). An important aspect of this plan is a goal of achieving 15% of the total USFS land in the Snoqualmie Pass Adaptive Management Area (AMA) will be old growth forest (>180 years of age). Presently, none of the three major sub-watersheds in the Green River Watershed (Upper Green; Middle Green; Lower Green) have achieved 15% of old growth stands. Consequently, the USFS has determined that it must preserve enough late successional stands to provide 15% old growth forest in these sub-watersheds in the future. Forest lands in early- to mid-successional stages would be targeted for commercial harvest. Fragmentation of late-successional and old growth stands has been identified as a difficulty for wildlife due to the lack of travel corridors. A proposed land exchange with Weyerhaeuser Corporation would reduce USFS ownership in the Green River Watershed. An impact of land exchanges is that some old growth would be given up to commercial harvest. Much greater details on the management of USFS lands can be found in the Snoqualmie Pass Adaptive Management Area Plan EIS (1996), and the Green River Watershed Analysis (1996).

c. Tacoma. Tacoma's forest management objective in the Green River Watershed is to provide water quality protection and, to the greatest extent possible, benefits to fish and wildlife habitat in a financially self-sustaining manner through environmentally sound forest management that meets or exceeds regulatory requirements. To achieve this

objective, Tacoma has divided its holdings into three management zones: Natural; Conservation; and Commercial. Tacoma places its natural zone around surface waters, including Howard Hanson Reservoir, Green River, and tributary streams. The zone extends from the average high water mark to the forested uplands, or property boundary, or a physical barrier, such as a road or powerline right-of-way. The Conservation Zone includes upland forest land, fields, rock outcrops, open lands, and wetlands, generally adjacent to the Natural Zone, especially where forest practices could impact wildlife habitat and water quality. Its boundary extends up to the Commercial Zone, property boundary, or physical barrier. The Commercial Zone is upland forest land where forest practices will not adversely impact wildlife habitat or water quality. Twenty percent of Tacoma's lands are in the Commercial Zone; and 40% each is in the Conservation and Natural Zones. Management of these zones is summarized as follows:

(1) Natural Zone. Forest management is directed at preserving the health and vigor of the vegetative cover to reduce erosion. The long-term goal is to let natural succession develop mature (100-180 years old) and old growth (180+ years of age) seral stage habitats for associated fish and wildlife species. Old growth and mature seral stage forest stands will not be harvested. Occasionally, forest practices will be conducted as the need arises to: salvage trees damaged or killed by large natural catastrophic events (i.e., wind, fire, flood, insects, or disease) which may impact water quality or the health of the forest if not removed; modify wildlife habitat to attract deer and elk away from areas near the water supply; and do streamside restoration to minimize erosion and improve fish habitat. An exception to this goal will be approved major projects which will benefit water quantity, quality, and fish habitat requiring large scale forest management activities.

(2) Conservation Zone. Forest management in this zone will be directed at maintaining or improving the health and vigor of the vegetative cover for fish and wildlife habitat production. The long-term goal is to accelerate the development of existing even-age single storied stands into late successional multi-storied forest habitats. Regulated uneven-aged forest practices in conifer stands and even-aged forest management in hardwood stands will be conducted in this zone. These forest practices will be used to maintain, enhance or change wildlife habitat to attract deer and elk away from areas near the water supply and provide forage, cover (hiding and thermal), nesting, denning and dispersal habitat. Once the forest stands in this zone reach the mature seral stage, about 100 years of age, they will not receive a final harvest. More detailed discussion of harvest schedules is found in Section 8.2 of Tacoma's Forest Land Management Plan (1996).

(3) Commercial Zone. Forest management in this zone is aimed at producing merchantable timber at a sustainable level, and within certain environmental constraints. Both uneven- and even-age stands will be managed. The environmental constraints are regulated by the Washington State Forest Practices Act; Shoreline Management Act; Hydraulics Project Approval Act; Log Export Regulations; federal Endangered Species Act; and the 1995 Agreement between the Muckleshoot Indian Tribe and Tacoma Public Utilities. The city has also imposed its own forest practices rules for management of city

lands. These are described in detail in Section 6 of Tacoma's Forest Land Management Plan (1996). Harvest cycles are also discussed in this Plan (Section 8.3).

1.6.7 Flood Plain Development/Regulations

The existing project provides 500 year flood protection for the lower river. This kind of protection is considered a minimum for urban development. There is no room in the reservoir conservation storage during flood control season. Flood control provided by HHD is complemented and supplemented by a system of levees and the Soil Conservation Service Black River Pumping Station.

HHD is operated for flood control so that the sum of the dam release and local inflow between the dam and Auburn will not exceed the control flow of 12,000 cfs at the Auburn gage. As local inflow increases, releases from the dam are decreased. Only twice has the flow at Auburn exceeded 12,000 cfs – on December 1975 and February 1996. These floods have permitted field observations of flows up to and including 12,000 cfs. Flows of 12,000 cfs can be accommodated with risk. In some areas, the differential between river water surface and top levee is less than 1 foot. The channel capacity is needed to reduce the risk of premature filling of Howard A. Hanson Reservoir, which could result in discharges in excess of 12,000 cfs below Auburn. Flood control structures properly designed, constructed, and operated reduce but never completely eliminate the probability of flooding. The possibility always exists that floods will occur which exceed the physical capabilities of the structures.

The development in the valley and consequent need to manage floods in all areas has now reached a point where the needs and capabilities of the various systems may be in danger of conflict. King County and the City of Renton have indicated during HHD AWS scoping that any chosen alternative should not adversely affect flood control in the valley. Further, they have suggested that flood control be included as a study purpose with the objective of modifying ramping rates and reducing maximums allowable flows at Auburn to accommodate levee and pumping needs.

Flood control is not included as a purpose in the HHD AWS primarily because it would require an additional local sponsor. However the study has been and will be carried out in a manner such that the recommended plan does not aggravate current flood control challenges.

1.6.8 Water Rights and Flow Requirements

The Corps augmentation of streamflow to the extent of providing 110 cfs below Tacoma's diversion began after HHD was constructed in 1962. The Washington State Department of Ecology (WDOE) established an Instream Flow protection program in the 1980. This program included the development of administrative rules for instream flows on the Green River, one of 26 of the state's Water Resource Inventory Areas (WRIA). Under this rule, an instream flow restriction has been placed on the main stem Green River. All tributaries

of the Green River, as well as all other small streams in be basin are closed to further water appropriation. Existing water rights are not affected. (Tacoma's Second Diversion Water Right is an existing water right which has been unused to this point.)

The instream flows provide varying degrees of protection levels. Instream flow hydrographs have been developed for two locations in the Green River Basin. Normal and critical year curves are supplied for the Palmer gage only. They are intended to apply to the proposed future release schedule of HHD, to the extent practically and legally possible, and the Second Supply Water Right diversion proposed by the City of Tacoma. Management of the normal and critical year curves will be the responsibility of the director or his designee, and violation of these flows or levels will only be allowed if overriding public interest will be served.

The presence of HHD on the Green River creates potential opportunity for additional future stored waters and future water rights. The instream flow program recognizes that impoundment of surface waters in Hanson Reservoir is an available means of appropriating additional water resources in the Green River Basin. Though the dam is a federal project, and is exempt from state control, the *use* of stored waters is subject to the state's authority in issuing water rights. A secondary application will be required for parties applying for beneficial use of water stored in a reservoir. Such a secondary application must refer to the reservoir as its source of water supply and show documentary evidence that an agreement has been reached with the owners of the reservoir to impound enough water for the purposes of the application.

INSTREAM FLOW CONTROL LOCATIONS

Control Location	USGS Gage Number	River Mile	Stream Management Reach
Green River near Auburn	12113000	32.0	From influence of mean annual high tide at low instream flow levels (approximately River Mile 11.0) to USGS Gage #12106700
Green River near Palmer	12106700	60.4	From USGS Gage #12106700 to headwaters.

INSTREAM FLOWS FOR FUTURE WATER RIGHTS IN THE GREEN RIVER BASIN

Month	Day	12113000 Normal Year Green River near Auburn	12106700 Normal Year Green River near Palmer	12106700 Critical Year Green River near Palmer
Jan.	1	650	300	300
	15	650	300	300
Feb.	1	650	300	300
	15	650	300	300
Mar.	1	650	300	300
	15	650	300	300
Apr.	1	650	300	300
	15	650	300	300
May	1	650	300	300
	15	650	300	300
June	1	650	300	300
	15	650	300	210
July	1	550	150	150
	15	300	150	150
Aug.	1	300	150	150
	15	300	150	150
Sept.	1	300	150	150
	15	300	150	150
Oct.	1	300	190	150
	15	350	240	150
Nov.	1	550	300	190
	15	550	300	240
Dec.	1	650	300	300
	15	650	300	300

In 1995, a written agreement was reached between the Muckleshoot Indian Tribe and the City of Tacoma regarding the Green/Duwamish river system. The Muckleshoot Indian Tribe is a federally recognized Indian tribe who has rights and responsibilities for the management of fish and wildlife resources and other natural resources of the Green/Duwamish river system. The City of Tacoma is the owner and operator of the municipal water system downstream of HHD through its Department of Public Utilities, Water Division. The agreement settles Muckleshoot claims against Tacoma arising out of Tacoma's municipal water supply operations on the Green River including the First and Second water diversions. The agreement establishes the commitment and framework for a long-term cooperative working relationship between the Muckleshoot Indian Tribe and Tacoma concerning the Green River. The Corps is not a party to the agreement; however, the Corps considers the instream flow requirements and other conditions of the Green River during its water management operations.

By management of its water supply diversions, Tacoma shall provide the following minimum continuous instream flows which will vary with weather conditions during the summer months. The determination of wet, average, dry, and drought weather conditions is aided by the use of reference zones within Hanson Reservoir that show available storage by date. The tabulation of the zones is too detailed for use in this appendix and is available in the Hydrology Appendix. Before a decision is made to drop the instream flows from

250 to 225 cfs, consultation among the Resource Agencies, Muckleshoot Indian Tribe, Corps of Engineers, and Tacoma shall explore alternatives to lowering the minimum continuous instream flow.

AUBURN INSTREAM FLOW BY WEATHER CONDITION

Summer Weather Condition	Auburn Instream Flow
Wet Years	350 cfs
Wet to Average Years	300 cfs
Average to Dry Years	250 cfs
Drought Years	250 to 225 cfs depending on the severity of the drought

Tacoma shall meet the continuous instream flow requirements at Auburn and Palmer whenever it is withdrawing water from the Green River with its Second diversion. To the extent that these instream flow requirements are greater than the State Instream Flows, these instream flow requirements control the diversion action.

PALMER INSTREAM FLOW BY SEASON

Season by Dates	Palmer Instream Flow
July 15 to September 15	200 cfs
September 16 to October 31	300 cfs
November 1 to July 14	300 cfs
(all other days of the year)	(same as the State Instream Flow)

AUBURN INSTREAM FLOW BY SEASON

Season by Dates	Auburn Instream Flow
July 15 to September 15	400 cfs
for other days of the year	refer to Instream Flow by Weather Condition

The agreement acknowledges that the operation of HHD for fish conservation is designed to protect against a drought that has a probability of occurrence of one in fifty years. While maintaining that standard, the parties agree that the operations should be modified during the summer to provide additional flows in the Green River for fish. Tacoma agrees that if the Corps modifies existing operations of HHD to release more water during the summer months and if fall precipitation does not occur in sufficient quantities to meet the instream flow requirements of the MIT/Tacoma agreement, Tacoma shall restrict its withdrawals of water from the Green River by its First Diversion to allow the Corps to recoup water required to maintain its federally mandated minimum instream flows. Tacoma may rely on its well capacity to meet its demand requirements during the period it restricts its Green River withdrawals.

For future diversions, the agreement states that Tacoma shall not pursue any further diversion of the Green River from May through October of any year before the completion of the Howard Hanson Dam Additional Water Storage Project. If the additional storage

project is approved, Tacoma will apply for a storage right for water stored at HHD as well as a diversion right to make use of that additional stored water.

1.6.9 Regional Power Outlook

Power supply is not an authorized project purpose at present nor is it expected to be in the future. It will therefore be dropped from further discussion.

1.6.10 Reopening of the BNSF Rail Line and Potential New 4 Mile Tunnel Construction

In January of 1886 the Bennett brothers received a contract from the Northern Pacific Railroad to bore a 16 feet wide, by 22 feet high and 10,000 feet long tunnel through a mountain just north of Mount Rainier. Scheduled rail traffic started in July of 1877. Thus began the Railroads over 100 year involvement through Stampede Pass on the upper Green River. The rail line proceeds out of the Auburn and follows the river in an easterly direction, gaining elevation to the top of the pass at about the 3,700 foot elevation and then down the east side of the Cascade range where it connects to Cle Elum. For many years this line was one of three that connected eastern and western Washington. Bulk loads such as coal and ore where shipped east, while wheat and other agricultural products went west.

In 1983 the line was abandoned and became inactive. Thirteen years later, as a result of a local increase in container traffic at the Ports of Seattle and Tacoma, the Burlington Northern Santa Fe (the former Northern Pacific Railroad) spent over 130 million dollars to reactivate and upgrade the line. This upgrade included expanding the rail bed by placing additional rock in the Green River, and improvements of the tunnel and snow shed at the pass. It is anticipated that as many as eight trains loads of double stacked intermodel cars will be routed through the Stampede Pass line on a daily basis to help alleviate some of the congestion on the other mainlines.

Although the Stampede Pass line provided the historic and economically important rail link between the east and west parts of the state, several environmental consequences are associated with its use. From an ecosystem perspective, utilities such as rail and power transmission lines fragment the landscape and disrupt the migratory patterns of large mammals. In many places the rail line is adjacent to the Green River. Disruption of river bed migration, loss of access to side channels and tributaries as well as localized impacts from instream filling with rock and ballast for the railbed have been detrimental to the aquatic resources not to mention the expected results of the ill-fated critter that finds itself on the track at an inopportune time. Disturbance, such as noise is also a problem and a few local families have filed suit against the Railroad.

These impacts are expected to continue into the future as the priority for rapidly routing container traffic back east takes on heightened importance in an increasing and competitive container market. One example of this type of activity can be seen in that the

Regulatory Branch is currently evaluating a permit application to place a large amount of riprap to control scour around a railroad bridge west of Lester (in the upper watershed). The applicant (Burlington Northern Santa Fe) also seeks to re-divert some of the current river flow back to its formal channel. There are some concerns about this proposal's effect on a local population of bald eagle. The Railroad is also currently evaluating the potential of altering the rail line in the upper basin to lessen its grade. This may include a new four mile long tunnel. If this proposition is realized there would be additional impacts related to the new construction which are dependent on its alignment.

1.6.11 Recreational Desires

During scoping and public review of the HHD Operations and Maintenance EIS and scoping for this study, recreational use interests have expressed a desire for more emphasis on recreational use of the Green River. Concerns regarding recreational use of the River and the effects of HHD operations centered on the need for additional recreation use studies, aesthetic studies and economic analysis of effects of instream flows on recreation. The Corps recognizes the obligation to attempt to accommodate white water recreation in the operation of the project and has recently endeavored to minimize the impact of reservoir operations on natural flows as much as possible. The greatest need is to provide flows suitable for recreation on weekends for kayakers and river rafters. Flows between 1,200 and 3,500 cfs are optimum for the majority of recreations use. Commercial rafting outfits are especially interested in increasing the weekends in April when these flow conditions occur. The Corps is committed to be more responsive to these needs and has invited members from The Rivers Council to represent the recreation community in the annual refill coordination process. Refill planning normally begins in March and generally extends through the conservation season. These meetings provide a process for consensus management of the Green River resources and resolution of fisheries, recreation and other conflicts. Including recreation as a specific objective of the GI Study is, however, precluded by current Corps policy.

1.7 EXISTING CONDITIONS

1.7.1 Flood Control

Storage of 106,000 ac-ft is provided for flood control from approximately October through March. The transition months, October and March are evaluated during real-time conditions to determine the imperative of providing 100% of the flood control allocation. Flood control storage is not needed outside of the winter period because the river is adequate to handle runoff from snowmelt and groundwater. The flood control zone is illustrated in the accompanying figure. The curves enclose the upper boundary of space required for flood control on the Green River. The actual slope of the Oct-Dec curve is variable depending on the duration of the low-flow season and the onset of fall rain.

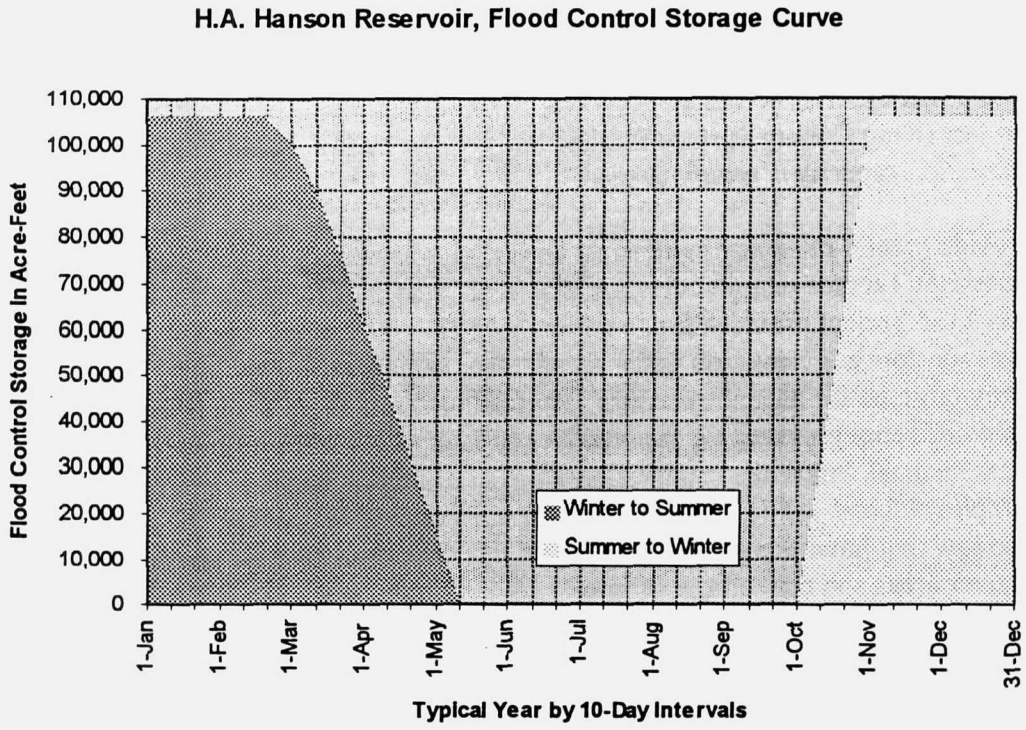

Flood Control Storage Curve for Howard A. Hanson Reservoir

1.7.2 Low Flow Augmentation for Fish Enhancement

The existing reservoir provides for 25,400 ac-ft of summer/fall storage for "enhancing" instream flows below the project. This storage volume has a 98% refill reliability to maintain a minimum instream of 110 cfs at the Palmer gage (6 miles downstream of HHD). This storage volume and use has been considered enhancement of instream resources (including fish), not restoration, as provided under existing project authority. Augmenting flows during the summer and early fall alters the flow regime from HHD (RM 64) to the estuary (RM 7) during the period when 1) juvenile salmonids are rearing in the river; 2) steelhead eggs are incubating and fry are emerging, 3) adult chinook and coho salmon are migrating upstream; and 4) chinook salmon are spawning in the river. The existing storage volume and minimum flows are barely sufficient to provide for instream passage of adult salmon during low flow years and are insufficient to keep steelhead eggs watered. Since 1987, the City of Tacoma has had to voluntarily reduce their water supply diversion during at least 3 years to supplement HHD releases to maintain these minimum flows.

The Washington Department of Ecology and Muckleshoot Indian Tribe completed an instream flow study between 1987 and 1992. This study identified and recommended much higher instream flows than HHD provides for salmon and steelhead spawning and rearing habitat requirements. The Tacoma/Muckleshoot Agreement stipulates a higher

instream flow requirement be met prior to Tacoma's diversion of their Second Supply water right (flows listed in Paragraph 3.1.2 Planning Criteria). Even though HHD cannot provide for desired instream flows (or even minimum flows in selected years), it has been estimated that the river would run dry in 2 of 10 years without flow augmentation from the project (King County Surface Water Management 1984). Additional low flow augmentation capacity is clearly needed.

To provide greater reliability in meeting the existing minimum flow and the Muckleshoot/Tacoma negotiated flows, the HHD Section 1135 project was initiated. The Section 1135 project provides for an additional 5,000 ac-ft of storage (30,400 ac-ft total storage) for flow augmentation under an adaptive management approach. This water is currently targeted for drought year use (estimated at once every 5 years on average) and only provides enough water for maintenance of minimum instream flows. Thus, it provides minimal, but critical restoration (see discussion of enhancement/restoration in Paragraph 1.9.2 and 1.9.3). Without the addition of this flow volume, minimum flows can drop so low that hundreds to thousands of adult salmon can become physically delayed in lower river areas and may ultimately die.

1.7.3 Municipal and Industrial Water Supply

The existing project authorization included up to 20,000 ac-ft of M&I water supply storage as an authorized project purpose. Storage of M&I water supply has not, however, been implemented. The main without project sources of summer/fall M&I water, for the City of Tacoma consist of the Green River first Diversion, South Tacoma Well Fields, existing other wells, future wells and industrial re-use. Today, Tacoma has a surplus of M&I water to meet the needs of their customers, however, by year 2003, the utility is expected, based on a medium demand forecast and without project resources, to be in need of developing a new water supply. Included as part of Tacoma's overall future demand for water are contracted water amounts to be supplied by Tacoma to Seattle and south King County. Seattle Water Department is currently in negotiations with Tacoma Water to provide Seattle with 25 million gallons of water per day (mgd) during the summer demand period via a water supply intertie which is currently planned for construction prior to construction of the proposed HHD AWS Project. Tacoma is also expected to supply up to 15 mgd to communities located in South King County. This water will be provided via Tacoma's pipeline No. 5, which is currently planned for construction completion prior to 2003.

1.7.4 Irrigation (Agricultural Water Supply)

The HHD AWS Project was originally authorized for irrigation water supply which was never implemented. Irrigation water supply is not part of the proposed project.

1.7.5 Recreation

The area below HHD is a regional recreational resource of particular value. Several park locations allow direct access to the river for activities such as fishing, floating, canoeing, kayaking, and hiking. The Green River Gorge is roughly 12 miles long, 500 to 1,000 feet wide, and up to 300 feet deep. The Gorge has areas with waterfalls and springs.

The Upper Watershed above the Tacoma diversion dams is basically undeveloped and closed to fishing within the City of Tacoma's watershed. Some recreational hunting is permitted annually. Public lands and some private lands in the Upper Watershed could be opened in the future.

There is intense public interest in use of HHD to enhance white water recreational opportunities. In recent years, the Corps has taken these needs into consideration to the extent possible when making water management decisions.

1.7.6 Power

Power supply is not an authorized project purpose and is not expected to be in the future.

1.7.7 Ecosystem Restoration Opportunities

a. Low Flow Augmentation. Flow augmentation beyond existing HHD releases may be necessary to increase summer and fall low flows for: 1) meeting minimum flow volumes and depths for keeping steelhead eggs watered through July and August; 2) meeting minimum flow volumes and depths for adult upstream migration; 3) increasing adult salmon holding habitat; 4) creation of late-summer freshets to draw salmon to preferred upstream spawning areas; 5) meeting preferred fall spawning flows for salmon; and 6) reducing elevated stream temperatures that can stress or kill adult fish, delay spawning, and kill incubating eggs. There is currently no other means available to provide for additional flow augmentation.

The existing storage of 25,400 ac-ft allocated for low flow augmentation uses approximately ¼th of the total potential reservoir space behind the dam. The facilities for regulating water flow are already in place, so there is a potential opportunity to store additional water for low flow augmentation. The additional storage would have to be compatible with the existing flood control authority and compatible with the existing instream flow of 110 cfs. With careful attention to measurements and criteria for the use of additional storage, this becomes a viable option for further study. The formulation of a plan to implement the use of additional water storage will need to consider functional impacts on the Green River environment such as habitat restoration and fish passage through the dam.

A parallel Corps Ecosystem Restoration reconnaissance study has begun on the Green River (Green/Duwamish River Basin GI Ecosystem Restoration Study). This study also

identified summer and fall flows as ecological limiting factors in the river. These low flows, besides limiting fish habitat, can be associated with other water quality concerns. Decreased low flows during summer and fall can influence 1) the amount of available freshwater habitat in the Duwamish estuary; 2) available dissolved oxygen in the river; and 3) dilution of nutrients and introduced pollutants in the river.

b. Habitat Restoration and Fish Passage

(1) Habitat Restoration. The Corps Ecosystem Restoration reconnaissance study has also identified a series of restoration strategies necessary to return the Green River to a more natural condition. Some of these strategies include:

- Improve connections between the mainstem river and floodplain/estuary habitats. Less than 10% of the floodplain and 3% of the estuary wetlands are connected to the river. Actions include removing or setback levees, lower the elevation of side channel inlets, and/or addition of large wood to increase the mainstem water surface.
- Change river sediment loads and transport. Almost 50% of the watershed is above HHD and the dam traps a large sediment load. Up to 1,000 linear feet of lower river mainstem spawning habitat is losing gravel substrates each year. Actions are limited but could include placement of gravel in selected sediment deficient areas.
- Change river flows. Peak flows have been reduced to a maximum 12,000 cfs at Auburn due to the need for flood control. Water withdrawals have reduced minimum flows in major tributaries, and refill of HHD has altered the natural flow regime in the spring. Actions considered include altering HHD refill to mimic natural flow regime, altering timing of refill, and additional storage for flow augmentation.
- Improve instream habitat complexity and structure. Large wood is scarce due to loss of the riparian zone; levees constrain much of the lower 35 miles. Actions include addition of large wood and removal or setback of levees.
- Reduce water temperatures in the mainstem. Loss of nearshore forests and lower flows have resulted in higher summer water temperatures, often near the lethal limits of cold-water fish. Actions include provision of water control at HHD outlet, flow augmentation, improvement of riparian areas, setback or removal of levees.
- Increase natural nutrient loading levels. A reduction in natural spawners (and their carcasses) throughout the watershed has reduced critical inputs of marine-origin nitrogen. Limited amounts of nitrogen reduces productivity of the entire aquatic food chain. The Upper Green River is probably severely deficient in natural inputs of nitrogen.

(2) Fish Passage. Under a strict ecosystem approach, fish passage should be considered under habitat restoration, an ecosystem function or limiting factor addressed by fish passage is the habitat disconnection between the Upper and Lower Green River. Remove barriers to fish passage. For this discussion, fish passage will be treated as a separate restoration item. Under the Green Duwamish Study "barriers to fish passage" was identified as a limiting factor in the Green River. In combination, HHD and Tacoma Diversion Dam currently isolate the Upper Green River (45% of the entire basin). In

addition to these major barriers many tributaries have impassable culverts, and low drought year flows can trap salmon in the lower river.

Actions or strategies to address these limiting factors include upstream passage around the dams, downstream passage at HHD, replace culverts, and augmentation of summer flows. Upstream passage around the Tacoma Diversion Dam and HHD will be provided under the Muckleshoot/Tacoma Mitigation Agreement (discussed in Paragraph 1.6.2). Currently, a temporary fish ladder and trap is used to collect adult steelhead and salmon. All wild adult steelhead are trucked and released above HHD. Initial releases of wild salmon are planned to begin in 1998. A new, permanent fish ladder and fish collection facility is planned (under the Agreement) and will be built in the near future. This adult collection and transport facility is designed to indefinitely provide for fish passage of all wild adult salmon and steelhead around both dams.

As discussed in Paragraph 1.6.1b., there are no downstream fish passage facilities at HHD. Survival rates are only estimated, varying by species and years, but overall range from 5-25%. Strategies to provide downstream fish passage through or around HHD can include – collection of juvenile fish before they reach the reservoir (upstream collector) with nets or a barrier dam, or collection of fish at the dam. A successful dam fish passage facility would require a surface inlet with a capacity to pass most outflow during the main smolt emigration period (late April through June) and to move fish from reservoir pool elevation down to the lower river through an unpressurized conduit.

1.8 WITHOUT PROJECT CONDITION (ALTERNATIVE 1 – NO ACTION)

This alternative is defined as the condition most likely to prevail in the future if no project is undertaken.

1.8.1 Flood Control

The amount of flood control storage space that is likely to prevail in the future is the same as the existing conditions – 106,000 ac-ft up to elevation 1206 feet. The flood control protection for Auburn would also likely remain at a discharge of 12,000 cfs.

1.8.2 Low Flow Augmentation for Fish Enhancement

Existing storage of 25,400 ac-ft and maintenance of minimum instream flow of 110 cfs at Palmer would continue. Under existing condition the river will continue to experience low flows during summer and fall with associated impacts to fish and aquatic resources. In dry years this storage volume will be insufficient to provide for even the minimum flows at Palmer (110 cfs) or the Muckleshoot/Tacoma negotiated flows at Auburn (250-350 cfs). Additional development of the lower river and water withdrawals below the Tacoma Diversion could exacerbate this limiting factor. Refill of this storage volume will continue to entrap many juvenile fish outmigrating from the upper watershed, thus precluding

restoration of the fish runs and impacting recovery efforts under the City of Tacoma/Muckleshoot Mitigation Agreement.

1.8.3 Section 1135 Low Flow Augmentation for Environmental Restoration

The Section 1135 project provides for an additional 5,000 ac-ft of storage for flow augmentation under an adaptive management approach. This water is initially targeted for drought year use and only provides enough water for maintenance of minimum instream flows (250 cfs at Auburn). Thus it provides minimal, but critical restoration. Storage of this water exacerbates the existing poor passage conditions at HHD, reducing downstream survival by an undefined increment below survival experienced for the 25,400 ac-ft of storage. If instream flows in the Lower river continue to drop from land and water development within the basin, it is likely that the water would be requested for use every year to meet flow requirements. The without project condition assumes the 1135 project is in place and operational during drought years.

1.8.4 Municipal and Industrial Water Supply

The without project condition includes all existing water supply measures plus the addition of other measures expected to be implemented during the forecast period. Following is a list of items expected to be in place as part of the without project condition:

(1) construction of pipeline No. 5 will occur prior to project year one. Pipeline No. 5 is a water transmission line, with a capacity of 100 cfs (65 mgd) , which will deliver water from Tacoma's water diversion structure located downstream of HHD through several communities in south King County and on to Tacoma. This line will be used to transport water to Tacoma's service areas in need of additional water. The diversion operation of Tacoma's second supply water rights will be a run-of-river operation without the use of additional storage at HHD;

(2) construction of new ground water wells;

(3) implementation of a proposed artificial recharge project;

(4) construction of a water supply intertie between Tacoma and Seattle water systems with a peak capacity of 62 cfs (40 mgd); and

(5) implementation of cost effective water conservation and non-structural measures.

Outputs of all existing and future structural water supply sources are based on 98% reliability. They will not be sufficient for Tacoma's projected needs. See Appendix B for more information on the without project condition associated with water supply.

1.8.5 Irrigation (Agricultural Water Supply)

While irrigation water supply is an authorized project purpose, it has never been implemented and is not part of this proposed project nor is it planned for implementation as part of any other project. Therefore, the without project condition does not include irrigation water supply.

1.8.6 Recreation

In the "without project" condition, recreational needs will remain as described in existing conditions above.

1.8.7 Power

Hydropower is not an authorized project purpose and is not expected to be in the future.

1.8.8 Ecosystem Restoration Opportunities

a. Low Flow Augmentation. Additional flow augmentation is not a viable restoration opportunity under the No Action Alternative. No other storage is available to meet increased instream flows other than HHD. A potential way of increasing the magnitude of flow from the existing storage allocation would be to decrease the existing reliability from 98% to something lower. The existing storage could provide an additional 10 to 20 cfs with a low reliability; however, the stored water would run out prior to the end of the low-flow season in approximately 1 out of 5 years. The shortage would occur in the fall and impact the adult salmon returning to span. The impact of this change of operation would likely not justify the small increment of water flow. A better opportunity would be to maintain the existing flow augmentation and look for a way to increase the reservoir storage level. The Section 1135 restoration authority has already been used to store 5,000 ac-ft for flow augmentation at HHD, it is highly unlikely this authority could be used a second time to store additional water behind the dam. Even if additional water were stored at HHD, the enlarged, deepened reservoir would further reduce the restoration potential of reconnecting the 221 square miles of fish habitat above the dam unless downstream fish passage facilities were provided.

b. Habitat Restoration and Fish Passage. Limiting factors and restoration strategies identified under Paragraph 1.7.7. are carried forward, including downstream fish passage through HHD. The Muckleshoot/Tacoma Mitigation Agreement will be implemented, as a without-project condition, providing for an upstream fish passage facilities around the Tacoma Diversion Dam and HHD. It is unclear at this point how many, if any, of the other restoration strategies identified under the Basin Restoration Study will be implemented. This is a new use of an existing authority and no study has yet been carried to completion. Without restoration action under the Basin Study or the HHD AWS project, many of the limiting factors in the river will continue to become worse, further limiting the capacity of the system to sustain animal and plant communities. If

downstream fish passage is not implemented under any of the current planning studies, the upstream fish passage provided under the Agreement may become superfluous as few adults will return and/or juvenile fish plants in the Upper Green may cease because of low survival through HHD.

ESA listing of threatened or endangered fish will most likely occur for one or more anadromous species. Prescriptions for recovery of these fish runs could be dramatic, including the need for addressing one or more of the restoration strategies and actions under Paragraph 1.7.7.

1.9 WATER AND RELATED LAND RESOURCE NEEDS

1.9.1 Flood Control

King County has expressed interest for a reduced control flow in the Green River (below the present 12,000 cfs at Auburn). Engineering studies conducted in the past have shown there is no space in the reservoir to store extra runoff that would allow increased flow control. King County has also expressed that any use of storage for purposes other than flood control should not have an impact on the functional capability of the existing flood control. The scope of work for planning the additional storage for water supply and low flow augmentation has kept the formulation of additional storage away from winter flood control needs. All alternatives proposed for study during plan formulation have the same flood control requirement so this discussion is not needed for each alternative.

1.9.2 Low Flow Augmentation

Under rules for the existing water conservation storage, flow augmentation is considered an enhancement to instream resources, providing more than is biologically needed. This enhancement would be an improvement over existing conditions based on identified needs. There are several needs identified for Green River anadromous salmon and steelhead that flow augmentation could "enhance".

There has been a need expressed to provide for additional flexibility in storage operations to protect steelhead egg incubation. Existing storage capacity typically does not provide sufficient flows (above minimums) through July to cover areas where steelhead redds are incubating. In addition to lack of storage capacity, limitations of the existing refill rule curve have resulted in the dewatering of up to one-half of all steelhead eggs in a single year.

A need has been expressed for addition storage capacity to augment flows in the summer and early fall for salmon and steelhead rearing. Following emergence, juvenile anadromous salmonids can spend up to two years rearing in the stream before beginning their downstream migration. Researchers have shown a positive relationship between the amount of summer and fall flow and population success of coho salmon and steelhead populations in Puget Sound. The Washington Department of Ecology, Department of

Fish and Wildlife and Muckleshoot Tribe have been strong proponents of additional summer flows to support these fish runs in the Green River.

A need has been expressed for additional flow augmentation in late summer and fall to attract adult salmon to upper river areas and to maintain these flows for spawning. Existing storage only provides for meeting minimum summer flows. These flows are low enough that large adult salmon can become delayed or will hold and spawn in lower river areas that may be less desirable. Typically salmon move upstream following brief, natural freshets, existing storage usually cannot support freshets. Optimum fall spawning flows for salmon are at least 100% greater than existing minimums: Washington state minimum flows are 300 cfs at Auburn and 110 cfs at Auburn; Muckleshoot/Tacoma negotiated flows are discussed in Paragraph 1.6.3. The Washington Department of Ecology, Department of Fish and Wildlife, and Muckleshoot Tribe have been strong proponents of additional fall flows to meet identified instream flows levels that would support and increase these fish runs in the Green River. There are concerns that storing additional water during the spring to meet this fall flows may have adverse impacts on Lower river resources and more information on refill impacts are needed before additional storage can occur.

1.9.3 1135 Low Flow Augmentation

Unlike existing storage, HHD Section 1135 water storage was identified as a restoration project. Restoration as defined here is "measures to return a degraded ecosystem's functions and values, including hydrology, plant and animal communities, to a less degraded condition" (Corps Environmental Program Database). Unlike other authorizing language for HHD, Section 1135 flow augmentation would not be "enhancing" the system, but would be used to partially recover the Green River fish resources by meeting biological needs identified for summer and/or fall flows.

The storage and release of this "restoration" water was described in the PMR as adaptively managed. Maximum benefits and initial use were defined as drought years, 1 in 5 years, however as more is learned about impacts and needs for this water; the frequency of storage could be changed. As discussed in Paragraph 1.8.2, there is an identified biological need for summer and/or fall flows that could be partially addressed with annual use of this storage water. However, under the constraints of the existing rule curve and lack of adequate downstream fish passage, this need cannot be addressed without additional resource impacts.

The Section 1135 plan also provides an opportunity for expansion of the aquatic plant community of the reservoir. One species in particular (Columbia sedge) has been found to tolerate – even thrive – in the extreme fluctuating conditions found at Howard Hanson reservoir. This sedge, as well as Oregon ash and bald cypress, will be planted in favorable locations around the reservoir to supplement aquatic habitats for both fish and wildlife.

1.9.4 Municipal and Industrial Water Supply

Common images of western Washington usually include green forests, salmon runs, Puget Sound and lots of rain. While rain is indeed plentiful ranging from 31 to 44 inches annually throughout western Puget Sound during most years, the majority of that precipitation falls during the late fall and winter. Little or no rain is experienced during the summer and early fall season. Conversely, the greatest water demands occur during the summer season, particularly July and August, challenging utilities to better manage and stretch their existing resources to meet those demands. This is becoming a greater challenge as the growth rate in the Puget Sound region continues to climb and the ability to procure additional water supply resources decline.

The need to supply or develop additional M&I water in a given region is primarily a function of population and employment growth over time. That is, economic growth in an area results in increased employment which in turn results in increased population, created primarily by in-migration. Both of these actions results in a increased demand for additional water in all demand sectors (Residential, Industrial/Commercial, Public, etc.). Forecasts of employment and population growth in the Puget Sound region, including the water supply area serviced by Tacoma Water, show a significant increase over the forecast period. As a result, the need for additional water, even considering the implementation of the most cost effective conservation measure, is going to increase such that new water supply resources will need to be developed. For example, the Boeing Company has recently constructed a aircraft component manufacturing facility in a part of Tacoma Water's service area. This results in increased employment plus an increase in surrounding population which in turn increases the demand for M&I water. As a result, the city of Tacoma has expressed an interest in developing the HHD AWS project for the purpose of providing additional water supply to meet their forecasted supply deficits.

1.9.5 Irrigation Water Supply

The authority to construct Howard Hanson Dam included irrigation water supply as a project purpose. Prior to construction of this dam, the Green River valley was primarily an agricultural area consisting of many crop farms and there was an expectation that additional irrigation water supply would need to be provided in the future. Construction of HHD, however, significantly reduced the likelihood of flooding in the valley and without the threat of flooding, the valley economy changed from an agricultural community to a major commercial and industrial center. Subsequently, the demand for additional irrigation water has not developed and has actually been replaced by a demand for additional municipal and industrial water.

1.9.6 Recreation

Recreation will continue to be a project operation consideration, but not a specific purpose.

1.9.7 Power

Hydropower is not an authorized project purpose and is not expected to be in the future.

1.9.8 Environmental Restoration Opportunities

a. Low Flow Augmentation. The fish instream flow needs identified under Paragraph 1.9.2 are carried forward to this section as environmental restoration opportunities.

b. Habitat Restoration. The habitat limiting factors and restoration strategies identified under Paragraph 1.7.7 are carried forward to this section as habitat restoration needs and opportunities.

SECTION 2 – PRELIMINARY PLAN FORMULATION

2.1 RECONNAISSANCE STUDY ALTERNATIVES AND EVALUATION

The reconnaissance study for Howard Hanson Dam (HHD) Additional Water Storage (AWS) project was conducted under Section 216, Public Law 91-611, Review of Completed Projects, River, Harbor and Flood Project.

2.1.1 Early Planning Objectives

The original purpose of the project, as defined in the 1989 Reconnaissance Study, was to determine if HHD is a viable source of additional water supply and if there is a federal interest in modifying the project to meet regional water resource needs. The primary project outputs were: (1) to provide 65 million gallons per day of municipal and industrial (M&I) water at 98% reliability and (2) to increase summer instream flows (low flow augmentation) from 110 cfs (98% reliability) to 200 cfs. The additional 90 cfs would be at 75% reliability. Improved downstream fish passage was the mitigation for project impacts. A restoration objective was not defined as the authority for ecosystem restoration had not yet been created.

2.1.2 Planning Criteria

Additional water supply benefits were measured using the most likely, least-cost, water supply alternatives identified at the time as available to the City of Tacoma. Low flow augmentation benefits were not quantified. Mitigation associated with a higher pool for water supply and low flow augmentation was a downstream fish passage facility.

2.1.3 Alternatives Considered

Three structural M&I water supply alternatives were formulated. A variety of additional structural and non-structural water supply alternatives were available but the City of Tacoma considered these non-viable at the time of the reconnaissance report.

a. Recommended Alternative: Additional Storage at Howard Hanson Dam. Provide 62,400 ac-ft of summer storage, an additional 37,000 ac-ft over existing storage, by raising the existing summer conservation pool from 1,141 feet elevation to 1,177 feet elevation. Storage blocks included 24,000 ac-ft for M&I and 13,000 ac-ft for flow augmentation.

b. Alternative Supply 1: Smay Creek Dam. Construct a water supply dam on Smay Creek located 10 miles upstream of HHD and tributary to the Green River.

c. Alternative Supply 2: Skagit River Pipeline. Construct a water supply pipeline to the Skagit River, 84 miles north of the Green River. The Skagit River was identified as a possible major regional source of water, which could easily supply large volumes of water.

2.1.4 Alternative Evaluation

In the Reconnaissance Report, Additional Water Storage (AWS) at HHD was the least-cost of the three identified water supply alternatives provided by Tacoma and was carried forward into feasibility as the recommended alternative (Table H-1). The Additional Storage alternative cost includes provision for fish and wildlife benefits by increasing summer flows by 90 cfs at 75% reliability . A downstream fish passage facility was considered as mitigation (cost $4 million) and was conceptualized as a variation on the Green Peter Dam "gulper", a downstream, juvenile fish passage facility on a Portland District storage dam.

TABLE H-1. COST OF RECONNAISANCE STUDY ALTERNATIVE SOURCES OF WATER (IN 1989 PRICES)

Alternative	Cost ($ Million)	Capacity (mgd)	Reliability	Cost/mgd ($ Million)
Additional Storage	21	65	98%	0.23
Smay Creek Dam	106	65	98%	1.63
Skagit River Pipeline	270	90	98%	3.00

The maximum additional water storage reservoir pool height (and storage volume) was established based on water supply and environmental needs, and geological limits. The highest pool elevation experienced at the time of the Reconnaissance Study was the 1,176.7 feet pool during the December 1975 flood. At that time it was assumed that the existing geological conditions could accommodate a raised pool up to elevation 1,177 feet without major fixes to the geological problem area, particularly seepage through the North Fork channel and the dam's right abutment pervious material. Using the 1,177 feet height, a series of hydrologic flow regimes were conducted to maximize the use of this storage between water supply and low-flow augmentation. This hydrologic analysis demonstrated the operability of the project.

2.2 PLAN FORMULATION STRATEGY

Under the Reconnaissance Study, the primary project purposes were water supply for M&I and low flow augmentation for fish enhancement. Under the preliminary phase of the Feasibility Study the project purpose was expanded, based on a new program authority, to incorporate ecosystem restoration as a project purpose; this included: 1) low

flow augmentation; 2) a downstream fish passage facility at the dam; and 3) habitat improvements for fish and wildlife.

Agency and public attitudes have increasingly focused on the need to identify and implement restoration projects to protect fish and wildlife resources in the Green River Basin. This local attitude change is reflective of the current state of regional public perception and environmental law. Concurrently with this intense emphasis on environmental protection and restoration, a change in federal policy (Water Resource Development Act 1994) occurred that authorized expansion of the Additional Water Storage (AWS) project from single purpose water supply to multipurpose water supply and ecosystem restoration project. This policy change significantly affected the scope, process, and features of the AWS project. Environmental project features now are looked at as restoration opportunities.

2.2.1 Preliminary Planning Objectives

Preliminary objectives formulated for the multi-purpose water supply and ecosystem restoration project were to provide 1) cost effective and sufficient M&I water supply to meet the water needs of the project sponsor over the life of the project; 2) ecosystem restoration: with a goal to establish healthy, naturally reproducing, self-sustaining runs of chinook and coho salmon and steelhead trout in the Upper Green River watershed above HHD; and 3) provide limited habitat restoration for selected ecosystem functions, processes or structures in the Green River Basin.

Historical anadromous fish runs are outlined in the Fish Passage Technical Committee 1990 Report and were discussed as: fall and spring chinook, coho, and winter-run steelhead. Bull trout/Dolly Varden may have been historically found in the upper Green but have not been recorded since 1963 (WDFW records). The critical limiting factor to restoring fish runs to the upper Green River is adequate fish passage around HHD; this includes passage for juveniles and adults. However, maintaining and restoring water quantity and quality to the lower river is necessary too. Functional restoration (hydrology) of the lower river should include increased flows during the low-flow period, outflow temperature control during summer, and mimicking natural inflow and outflow during spring refill. The HHD AWS ecosystem restoration features will "complement" an overall Green River ecosystem restoration plan. A Duwamish/Green River Ecosystem Restoration Plan was initiated in FY 1996.

2.2.2 Preliminary Planning Criteria and Assumptions

In formulating a plan to meet the preliminary planning objectives, a number of planning criteria was considered. These criteria were used to screen and evaluate preliminary alternative plans for water supply and restoration measures.

a. Criteria Common to Water Supply and Restoration Measures.

(1) Period of Analysis. The period of analysis for this study includes a 50-year period from 2003 to 2053. Construction begins in 2001 and is completed by 2003.

(2) Costs and benefits are in October 1997 prices. Project interest rate is 7 and 1/8 percent.

(3) Water supply and ecosystem restoration measures cannot adversely impact existing project purposes. HHD is designed to provide flood protection and summer water conservation storage to meet minimum instream flows. Water supply refill and storage must occur outside the flood control rule curve and cannot replace or impact reliability (98%) of storing the existing 25,400 ac-ft of conservation storage.

(4) Water supply and Restoration measures must be in the Sponsors best interest. The Sponsors primary interest is in providing for regional water supply at a given rate with a given reliability. Reducing total M&I water supply storage or affecting water quality beyond a given level will preclude the Sponsors meeting their project objective. Measures that exceed the Sponsors ability to pay do the same.

(5) Water supply and restoration measures should be cost-effective per unit of output.

(6) The water supply and restoration measures must meet regulatory authorities and be politically acceptable to federal and state resource agencies, tribes, and sponsor. As this is a water supply project subject to federal and state water quality and fish and wildlife protection laws, political acceptance by resource agencies and tribes is critical to approval of the project. Conditional acceptance of phased water storage was granted through the Agency Resolution Process (discussed in Paragraphs 2.2.3. and 3.1.3.).

(7) Based on Criteria No. 6, aspects of the project have been negotiated, in particular storage volumes for M&I and flow augmentation water supply.

b. Water Supply Criteria

(1) Value of water supply from HHD is based on the least-cost water supply alternatives to HHD.

(2) Wells must not be in hydraulic continuity with existing surface water.

(3) Water supply measures must not adversely affect minimum in-stream flows.

(4) Water supply measures must provide 95% reliability and be of the same water quality as HHD.

(5) The water supply measure must not adversely affect water quality conditions: turbidity, dissolved oxygen, temperature, and saltwater intrusion.

(6) Water supply measures must avoid or minimize questions on water rights.

(7) The water supply source must be available, not just speculative.

(8) Water supply measures must avoid any overriding environmental problems.

c. Restoration Criteria.

(1) Restoration measures must address overriding environmental problems. Basin Analysis and interagency scoping has identified 6 aquatic habitat-limiting factors or restoration issues that the AWS project can address. These factors/issues include: 1) connection of the Lower and Upper Basin with improved fish passage at HHD; 2) minimum flows during summer and fall; 3) sediment transport in the mainstem river below HHD; 4) water quality; 5) side channel and floodplain habitat connectivity; and 6) stream habitat.

(2) Fish passage measures must meet design criteria provided by an independent technical committee, the Fish Passage Technical Committee (see Paragraph 2.2.3). This interagency committee developed a series of biological and hydraulic design criteria that must be met to meet the project restoration objective. The objective of all design criteria is to provide downstream fish passage that equals or exceeds 95% survival. This performance measure is the standard applied by federal (National Marine Fisheries Service) and state (Washington Department of Fish and Wildlife) resource agencies to all new downstream fish passage projects.

(3) The restoration measure project area is limited. In accordance with Section 216 and in consideration of the ongoing GI Green/Duwamish River Basin Restoration Project study, the HHD AWS habitat restoration features were primarily limited to areas near the HHD project area, i.e., dam, reservoir, and nearby locations upstream and downstream of the project.

(4) Restoration measures must be consistent with the Ecosystem Restoration Guidance. EC 1105-2-210 states that "Budgetary priority will be given to cases where Corps projects contributed to the degradation of the ecosystem." The EC also states that "The Corps principal focus in ecosystem restoration will be on those ecological resources and processes that are directly associated with, or directly dependent upon the hydrologic regime of the ecosystem study." Since one purpose of the project is to restore an ecosystem, the project should avoid wherever possible, requirements for fish and wildlife mitigation.

(5) Restoration measures must fall within the authorized project purposes. HHD is designed to provide flood protection and water conservation storage. Refill of the project

for additional storage for flow augmentation cannot impact current flood control capabilities or ability to provide low flow augmentation to meet existing instream flow requirements.

(6) Restoration measures must be consistent with AWS project objectives. The preliminary project objectives were 1) to provide a regional water supply at a given rate and given reliability; 2) to restore anadromous fish runs above HHD; and 3) restore selected ecosystem functions, processes or structures impacted by construction of HHD.

(7) Restoration measures must be consistent with the Green/Duwamish Basin Ecosystem Restoration Project. The overall objective of the Basin Restoration Project is to restore ecosystem functions and processes to a less degraded, more natural condition without reducing the level of protection of the flood control works in the lower basin.

(8) Are restoration measures dependent or independent of other projects. Restoration measures that occur above HHD are dependent on providing adequate downstream fish passage.

(9) Restoration measures must be consistent with existing fish and wildlife management. The WDFW is developing a Wild Salmonid Policy emphasizing long-term sustainability of wild salmon and steelhead runs. The Muckleshoot Indian Tribe (MIT) and WDFW maintain substantial harvests of salmon and steelhead for subsistence and cultural activities, commercial purposes and sport. The NMFS and US Fish and Wildlife Service (USFWS) provide recommended and prescribed fish passage and habitat criteria for proposed and listed threatened and endangered species.

(10) Restoration measures must be consistent with Howard Hanson Dam Master Plan objectives.

2.2.3 Study Advisory Committees

a. Fish Passage Technical Committee. In 1989, a five person expert committee was created to assist in formulating concepts, developing and evaluating alternatives, and selecting a final design for improving fish passage through the anticipated larger and deeper HHD reservoir. The five members were selected by the resource agencies, tribe, City of Tacoma, and Corps representatives as having the experience and technical expertise in dealing with fish passageways. Together, this group had over 150 years of research, design and evaluation experience. This Fish Passage Technical Committee (FPTC) included Ken Bates of the WDFW, Steve Rainey of the NMFS, Ed Donahue of Fish Pro, Inc., Phil Hilgert of Beak (now with R2 Resource Consultants), and Milo Bell, retired Corps researcher.

In 1990, the FPTC produced the report entitled *Howard A. Hanson Dam Fish Passage Alternatives for Proposed New Operating Rule Curve*. This report recommended studies and methodologies for evaluating fish passage alternatives and provided initial fish passage

design criteria. In 1992 the FPTC was reactivated to assist in developing, evaluating, and selecting a feasibility level fish passage concept for the proposed project. The Corps took the lead in preparing design concepts of possible fish passage facilities under the guidance of the FPTC. During this process, resource agencies and tribe representatives participated as observers and participants to the interaction between the Corps designers and FPTC. In the winter of 1996, the FPTC provided final input in evaluating and selecting among the final fish passage alternatives.

Besides consideration of passage alternatives, the FPTC report also provided a framework of Baseline studies necessary to assess the existing state of downstream fish passage at HHD as well as provide insights into potential changes in passage with the AWS project. These recommended fish studies resulted in a series of Baseline interagency monitoring studies performed by the USFWS, WDFW, the MIT, the Corps and the City of Tacoma. These studies have provided additional guidance in development of design criteria and evaluation of the fish passage alternatives. These studies were initiated in 1990 and will continue through the year 2000.

b. Agency Resolution Process. During the fall of 1995 and winter of 1996, the Seattle District and the Tacoma convened a series of resource agency meetings between technical and policy level appointees to discuss outstanding issues and concerns related to the current state of the AWS project feasibility study. An outgrowth of these series of meetings (Agency Resolution Process) was the Corps and Tacoma policy decision to propose a phased implementation of the AWS project. This phased approach was to 1) provide time to study further issues identified by the Agency Resolution Process that were not identified during earlier agency meetings in the feasibility study; and 2) to provide a means (adaptive management) to isolate and address specific management issues related to the AWS project..

c. Howard Hanson Dam Working Group. Since the inception of the HHD AWS project, a core group of agency (NMFS, WDFW, WDOE) and tribal (MIT) biologists and policy representatives have worked with the Corps and the City of Tacoma in development and refinement of water supply, restoration and mitigation alternatives. Throughout the entire reconnaissance and feasibility process these representatives have interacted directly with the Corps and Tacoma in shaping the scale, components and details of each of the AWS features. Coordination and interactions have occurred in conjunction with the FPTC, the Agency Resolution Process, and in numerous meetings/communications before, during, and after these two formal meeting formats. In particular, the Working Group was the committee responsible for selecting the final suite of project objectives and features.

d. Green River Fisheries Coordination Committee. Many of the members of the HHD Working Group serve in a dual capacity – working under the AWS project as well as cooperating in operation of the existing project. Under the existing project, agency and tribal members have direct input into the daily operation of the dam in providing resource protection – through the Green River Fisheries Coordination Committee (GRFCC, see

HHD Section 1135 PMR). This dual capacity has resulted in additional input to the AWS project from the long years of experience Working Group members bring to the table. Specifically, members have voiced concerns about the maximum water capacity diversion (for water supply and flow augmentation) the Green River can sustain without long-term impacts. Under existing storage, recent years have seen major impacts to downstream fish resources. This concern was conceptualized by changes in Baseline monitoring, AWS project objectives and features before, during and after the Agency Resolution Process. The formal change resulted in adoption of the Adaptive Management Plan with Phased Implementation of water storage.

e. Green-Duwamish River Ecosystem Restoration Teams. Under a separate Section 216 Feasibility Study, the Seattle District and King County performed a reconnaissance level basin study for ecosystem restoration opportunities in the Green River (Corps PMR 1997). A multi-agency panel participated in the formulation of habitat restoration measures with representatives from the USFWS, US Forest Service, MIT, Suquamish Indian Tribe, WDFW, Trout Unlimited, Tacoma, Plum Creek Timber, Washington Department of Natural Resources, the Green River Alliance, the Duwamish Coalition, King County and the Corps.

Scientists from respective resource agencies participated in a watershed restoration team. Studies performed by team members included 1) a Basin Analysis of significant ecosystem changes; and 2) a Limiting Factors Analysis to identify significant changes in ecosystem functions. These studies identified specific problems in the Basin and potential strategies to restore specific ecosystem functions or structures. The problems and restoration strategies identified were used to further expand the scope of mitigation and restoration measures considered and developed under the HHD AWS project.

f. Muckleshoot Indian Tribe. The MIT has been involved with the AWS project from its inception. They are represented by staff biologists or planners on all of the above study committees. They have interests and policies that are unique to all other study partners. During the Agency Resolution Process, they were the one party not granting conditional acceptance to the project (see Paragraph 3.1.3).

g. Wildlife Technical Working Group. The working group was established early in 1990 to address various wildlife impact and mitigation issues. The participants included biologists from the Washington Department of Fish and Wildlife, the U.S. Fish and Wildlife Service, the Muckleshoot Indian Tribe, the U.S. Forest Service, City of Tacoma Water Department, and the U.S. Army Corps of Engineers. On occasion, contractors representing Tacoma and/or the Corps also participated in the meetings. The working group was particularly instructive with regard to identification of elk impacts. The mitigation plan that was developed was largely driven by the advice of this working group. The working group met regularly for five years. In addition to the mitigation plan, the working group also was instrumental in developing an elk and deer population monitoring program for the watershed, which will provide important information regarding the distribution of these species relative to the reservoir, and compared to the watershed as a

whole. The monitoring is expected to continue beyond implementation of the additional water supply project, and it will be at least one measure of the success of the mitigation plan in providing viable habitat for elk.

2.3 PRELIMINARY ALTERNATIVES CONSIDERED

Under preliminary scoping for the feasibility study, a series of conceptual categories of water supply and restoration measures were developed in response to the need for regional water supply and ecosystem restoration. Restoration measures include potential mitigation measures but are not broken out into the latter category in the preliminary formulation. Individual supply and restoration measures were identified within each category. These categories and measures of water supply and restoration were:

EXISTING CONDITION (Alternative 1, No Action)

M&I WATER SUPPLY:

- Additional storage at Howard Hanson Dam (Alternative 2)
- Wells (Alternative 3)
- Demand management (Alternative 4)
- Transfers from Other Systems (Alternative 5)
- New Storage and/or Diversion Facilities (Alternative 6)

INSTREAM FLOW (Alternative 7)

- Low Flow Augmentation (Alternative 7A)
- Mimic Natural Hydrology (Alternative 7B)

WATER QUALITY (Alternative 8)

- Dam Temperature Control and Water Quality Improvements with Water Supply (Alternative 8A)
- Dam Temperature Control without Water Supply (Alternative 8B)

FISH PASSAGE (Alternative 9)

- Downstream Fish Passage at the Dam with Water Supply (Alternative 9A)
- Downstream Fish Passage at the Dam without Water Supply (Alternative 9B)
- Upstream Fish Passage at the Dam with Water Supply (Alternative 9C)
- Upstream Fish Passage at the Dam without Water Supply (Alternative 9D)
- Upper Reservoir Downstream Fish Passage with Water Supply (Alternative 9E)
- Remove Existing Dam (Alternative 9F)
- Trap and Haul Facility at Tacoma Diversion Dam (Alternative 9G)
- Eliminate Existing Conservation Pool (Alternative 9H)

FISH CULTURE (Alternative 10)

- Increase Existing Hatchery Rearing (Alternative 10A)
- Permanent Supplementation Programs (Alternative 10B)
- Temporary Supplementation Programs (Alternative 10C)

HABITAT (Alternative 11)

- Side-channel Improvements (Alternative 11A)
- Stream and River Habitat Improvements (Alternative 11B)
- Reservoir Improvements (Alternative 11C)
- Terrestrial Habitat Improvements (Alternative 11D)

2.3.1 Water Supply Alternatives:

The following describes water supply alternatives.

2.3.2 Alternative 2 – Modification of Howard Hanson Dam

a. Alternative 2A – Additional Storage With Fish Passage Mitigation. This alternative was the evaluated alternative in the 1989 Reconnaissance study and consists of providing an additional 37,000 ac-ft of storage for water supply plus increasing the low flow augmentation from 110 cfs to 200 cfs. Summer pool elevation would go from the existing project summer conservation storage at elevation 1,141 feet to elevation 1,177, a 36 foot increase or 37,000 ac-ft of additional storage. The additional storage would provide 65 mgd (which represents the capacity of pipeline 5) at 98% reliability plus it would produce an additional 90 cfs of low flow augmentation at 75% reliability. The reliability of the existing low flow of 110 cfs would remain at 98%. Mitigation would be provided using a fish passage facility.

b. Alternative 2B – Additional Storage Without Fish Passage. A project consisting of water supply and low flow augmentation but excluding a fish passage facility for mitigation was also considered. The inlet elevation of the current by-pass pipe is at elevation 1,069 and the proposed pool elevation for water supply and low flow augmentation would be to elevation 1,177. It is difficult for juvenile salmon and steelhead to sound deeper than about 20 feet and as such will find it very difficult to successfully migrate from the reservoir to the river downstream of the dam. As a result, most fish will remain trapped in the reservoir and fewer fish will be able to migrate to the ocean. In order to mitigate these impacts to salmon and steelhead, a fish passage facility capable of successfully passing juvenile salmon and steelhead is required. As a result, an alternative without a fish passage facility for mitigation is not considered practical or acceptable and was eliminated from further evaluation.

2.3.3 Alternative 3 – Wells

a. Alternative 3a – Lower Puyallup Lowlands. An evaluation of well potential in the lower Puyallup lowlands indicates that from 10-20 mgd of supply could be available. Each well would be between 300 and 600 feet deep and would produce about 1.5 mgd. These supplies have been found to contain iron and manganese which would require additional treatment. In addition, these well are at risk for salt water intrusion. The Washington State Department of Ecology had indicated that continuity with surface water in the Puyallup River is likely, minimum instream flows have been established for the

Puyallup River and the Department of Ecology would not approve withdrawal of water from wells in hydraulic continuity with the Puyallup River during periods of low instream flow in the river. Since this source would not be available during the critical summer period, it is not viewed as a viable alternative.

b. Alternative 3b – Lower Puyallup Uplands. This potential source of water supply is estimated to be capable of 10-20 mgd. Water quality appears to be acceptable for use as a public water supply without additional treatment other than chlorinating. Each well would be about 300 feet deep with production of more than 1.5 mgd per well. The aquifer also appears to be in hydraulic continuity with either Clarks Creek, a tributary to the Puyallup River or the Puyallup River directly. It is therefore subject to the same use restrictions as the lower Puyallup lowlands discussed above and has been rejected from further consideration.

c. Alternative 3c – Clover and/or Chamber Creek. The South Tacoma Lakewood area is estimated to be capable of producing 15-30 mgd. Water quality problems do exist due to industrial contamination in the Fort Lewis area. Wells would be 400-500 feet deep and salt water intrusion is possible. Utilization of water from this source is included in the Pierce County Coordinated Water System Plan and the communities of Lakewood and Parkland currently rely on water from this source. Based on current usage of the aquifer and its inclusion as a key source under the Coordinated Water System Plan for Pierce County, this alternative was eliminated from further evaluation.

d. Alternative 3d – North Bend Aquifer. For several reasons the availability of a North Bend Aquifer is speculative at this time. It is not certain how much water is available and since this aquifer is in the headwaters of the Snoqualmie River it would most likely be in hydraulic continuity with that river. In addition, the North Bend aquifer is far closer to the east side communities of Issaquah, Bellevue, Redmond, Kirkland and even Renton than it is to Tacoma. Given the very high cost of a pipeline necessary to move the water from the North Bend area to Tacoma, it would be much more practical for this source to be used to serve those communities rather than Tacoma. Due to the uncertainties surrounding the availability and practicality of this water supply source, it was eliminated from further evaluation.

e. Alternative 3e – Tide Flats. Based on a study performed by Hart Crowser it is estimated that the aquifer below the Tide Flats area of Tacoma is capable of producing an additional 5 mgd during the summer and 4-day peak periods. Construction would consist of installing two additional wells capable of producing 2.5 mgd each and 2,000 feet of transmission pipeline needed to convey this water to Tacoma's distribution system.

f. Alternative 3f – Lone Star Sand and Gravel. This property contains the rights to develop an additional 9.3 mgd for used during the summer and 4-day peak periods. Constructions consists of installing a well and approximately 15,000 feet of transmission pipeline, retrofitting a pump station to achieve a hydraulic gradient of 576 feet.

g. Alternative 3g – South Tacoma Aquifer. The South Tacoma Aquifer system has been an important source of water to Tacoma Water for over 90 years. There are currently 13 production wells which provide about 45 mgd. With additional wells, Tacoma Water, based on assessments, believes the aquifer could produce and additional 29 mgd during the summer months. Construction consists of installing several new pumps.

2.3.4 Alternative 4 – Conservation/Demand Management and Industrial Re-Use Alternatives

a. Conservation/Demand Management. This measure consists of implementing the most cost effective conservation/demand management measures from a list of all practical and available conservation measures. Tacoma Water Division analyzed numerous conservation measures to add to their existing conservation program based on estimated water savings and the cost to implement the measure. The measures were divided into four user classes: single family, multi-family, commercial/industrial, and public facilities. Three methods of delivery were evaluated for the single and multi-family user classes: direct installation, hang bag delivery, and direct mail. Each conservation measure was evaluated based on product useful life, cost per device, administrative cost, installation cost, number of units per customer, average water savings, and penetration and retention rates.

b. Industrial Reuse. Two industrial water reuse projects were originally conceived and presented as viable water savings measures in Tacoma Water's 1994 Water Reuse Feasibility Study. The first project would use reclaimed water from the county-owned treatment plant to provide up to 5 mgd of water to a Pierce County industry. This first project is scheduled to be implemented and is included as part of the without project condition as a source of water. The second project is considered a viable alternative to HHD AWS and consists of providing up to 10 mgd from a City-owned wastewater treatment plant to a paper product industry. Cost of this measure consists of constructing 4,000 feet of 30-inch pipeline needed to deliver the reclaimed water to the identified industry, plus it includes construction of a water filtration facility, disinfection and storage facilities at the treatment plant.

2.3.5 Alternative 5 – Transfers From Other Systems

a. Alternative 5A – Intertie With Seattle. This measure consists of constructing a water supply pipeline which will connect Seattle and Tacoma. The pipeline was sized to provide an estimated 40 mgd. At the time this alternative was first conceived and considered it was planned as a source of water for Tacoma with Tacoma purchasing water from Seattle. Further analyses have indicated that while a water supply intertie between Tacoma and Seattle makes sense from a sharing of resources in the region and that while an intertie between Tacoma and Seattle is planned and is currently part of the expected without project condition, Tacoma will, however, be supplying water to Seattle rather than vice versa. As such, this alternative was eliminated from further evaluation.

b. Alternative 5B – Purchase From Auburn. Auburn's supply of water is from wells in the area of the Green River. This alternative would consists of installing additional wells plus constructing a pipeline from the wells to pipeline No. 5 (assumes pipeline No. 5 is in place). Without pipeline No. 5 in place, a transmission pipeline from Auburn to Tacoma's distribution system would need to be constructed. The location of Auburn in the Green River Valley makes it highly likely that hydraulic continuity can be established between the city of Auburn well field and the Green River. Since the Green River is closed to further withdrawal of water during the summer due to low flows, this alternative was eliminated as a viable alternative to additional storage at HHD.

2.3.6 Alternative 6 – New Storage and/or Diversion Facilities

a. Alternative 6A – Green River Basin (Smay Creek). Using Smay Creek as a source of supply during the summer would require major dam construction similar to constructing a new Howard Hanson Dam. The environmental problems involved in constructing a new dam would be extensive and so difficult to overcome this alternative was rejected from further consideration as a viable water supply alternative.

b. Alternative 6B – Puyallup River Basin. Development of a new source of M&I water supply from the Puyallup River for use during the summer months would require the construction of a new dam. Minimum instream flows have been established on this river and river water is currently not available above those flows for some periods of each summer. In addition, given the environmental problems associated with construction of any new dam as well as tribal concerns and conflicts associated with a dam on the Puyallup River, construction of this alternative was rejected from further evaluation as a viable water supply alternative.

c. Alternative 6C – Nisqually River Basin. A dam on the Nisqually River suffers from the same limitations as the Puyallup River. In addition, a major new water supply pipeline would be required to bring the water from the Nisqually River to Tacoma making this a very expensive source of water. Given the limitations of this alternative, it was eliminated from further evaluation.

d. Alternative 6D – Skagit River Basin. This alternative was mentioned in the Reconnaissance Report as being a potential alternative to Howard Hanson Dam. This alternative consists of constructing a new dam on the Skagit River as well as a new pipeline to move the water from the Skagit River to Tacoma. Due to the high cost of this alternative it was not used in the Reconnaissance Report to quantify water supply benefits. Because of environmental problems associated with the construction of any new dam in this region as well as the very high cost of this alternative, it was eliminated from further consideration as an alternative to HHD AWS.

2.3.7 Alternative 7 – Low Flow Augmentation Alternatives:

a. Alternative 7A – Low Flow Augmentation. An alternative for instream flow was formulated from the most viable quantities and duration of flow from previous scenarios of additional water storage. The instream flow at Palmer would be 300 cfs from March through mid-May, then 200 cfs until mid-September, then an increase to 400 cfs from mid-September through the end of October. The 300 cfs quantity was designed to not jeopardize the ability to refill the required storage. The step-down from 300 to 200 cfs was designed to be closely parallel to the water supply diversion so it has a reliability close to 90%. In some drought years, the change from 300 to 200 cfs occurs prior to mid-May. The additional increment of 200 cfs for 1½ months in the fall (to 400 cfs) was treated as a separate block of water. This was a relatively large flow and storage requirement, so it was designed to coincide with the arrival of fall precipitation. The 1½ month duration of 400 cfs in the fall was successful in 77% of the years. In most of the shortage years, the flow augmentation could be partially delivered to either a lower quantity, such as 300 or 250 cfs, or a shorter duration of 400 cfs, such as for one month or a half month. After October, the instream flow continued at 200 cfs. When shortages at the 200 cfs level occurred, they were usually in mid to late November.

b. Alternative 7B – Mimic Natural Hydrology. Alternative 7A had the effect of delaying a block of runoff water from the snowmelt season and returning it to the river in smaller amounts later in the summertime. The details of the operation did not satisfy some of the restoration planning criteria. Operational simulation was revised into a "B" alternative. The new alternative used the same allocations of water storage as the "A" alternative, but was careful to store and deliver the water in a manner that mimicked the natural runoff hydrology of the river. Instead of using a base flow for refill, the outflow was caused to vary by imposing a refill rate on storage accumulation. A constant storage accumulation rate would cause the outflow to vary with the same pattern as the inflow. The maximum refill rates are shown in the table following below. Refill of the existing storage has higher priority and is allowed to follow the 98% rule curve.

MAXIMUM REFILL RATE FOR ADDITIONAL STORAGE ACCUMULATION

Dates for varying rate	Storage accumulation rate
15 Feb. to 15 April	750 cfs or 1,500 acre-feet/day
16 April to 30 April	300 cfs or 600 acre-feet/day
1 May to 31 May	200 cfs or 400 acre-feet/day

Alternative 7A defined the river condition for low flows, but didn't have any criteria for river flow under average and wet conditions. Alternative 7B included a minimum base flow throughout the refill period in addition to a varying target flow that mimicked a 1 foot stage decline from May 1 through June 30 to protect incubating steelhead eggs. Analysis and modeling of the historic database indicated that the base flow varied between 900 cfs, 750 cfs, and 575 cfs depending on weather conditions of wet, average, or dry. Likewise, the ending flow that was ramped from the base flow was 400 cfs for wet and average conditions and 250 cfs for dry conditions. Freshets are scheduled for delivery

downstream when storage allows. A freshet is a flow rate of 2,500 cfs at Auburn sustained for a duration of 38 hours. Four freshets are scheduled in the model near the dates of April 1, April 15, May 1 and May 15. If the weather is considered dry, the freshet is cut in half to 1,250 cfs. One freshet near September 1 is scheduled for 700 under all weather conditions. Alternative 7B pays close attention to the instream flows in the Muckleshoot/Tacoma Agreement which was not in effect during the formulation of Alternative 7A.

2.3.8 Alternative 8 – Water Quality Alternatives

a. Alternative 8A – Dam Temperature Control and Water Quality Improvements in the Lower River with Water Supply. Improve temperature releases from the dam (mimic inflow temperature regime) and other water quality outputs (dissolved oxygen, nutrient dilution from nonpoint sources, algal growth, organics, and saltwater wedge). This measure requires two features: structural improvement of the dam outlet for temperature control and low flow augmentation to increase summer flows in the lower river.

Any HHD downstream fish passage alternative that incorporates a surface withdrawal feature can be used to control dam outflow temperature. The combined flow release from a surface outlet and existing deepwater outlets would blend warmer surface water with cooler deep-water areas. In the majority of years, blended releases from HHD would improve instream temperatures up to 6 miles downstream of the dam. In addition to direct temperature control below HHD, the additional storage for low flow augmentation should help reduce maximum instream temperatures, dilute nonpoint source pollution, and increase-dissolved oxygen in the lower Green River. In the Duwamish River, the additional summer flow releases could also increase the amount of available freshwater estuary habitat. This alternative was carried forward for further evaluation.

b. Alternative 8B – Dam Temperature Control without Water Supply. Same as Alternative 8A but without additional storage of water for M&I and flow augmentation. This alternative was dropped for further consideration as it does not meet project objective of water supply.

2.3.9 Alternative 9 – Fish Passage Alternatives:

Any single downstream fish passage measure is dependent on upstream fish passage and vice versa. That is, as restoration measures, downstream fish passage for juvenile salmon and steelhead is inadequate without upstream fish passage. Therefore, downstream fish passage measures through or around HHD must be accompanied by upstream passage for adults around the Tacoma Diversion Dam and HHD to achieve restoration of natural, self-sustaining fish runs.

a. Alternative 9A – Downstream Fish Passage at the Dam with Water Supply. The 221 square miles of watershed above HHD potentially can produce over 1 million juvenile

salmon and steelhead smolts. Before, during and after reservoir refill, water withdrawals through existing deepwater outlets at HHD result in entrapment of most downstream, outmigrating juvenile salmon and steelhead. Additional storage of 32, 000 ac-ft will increase maximum dam outlet depths to 107-142 feet. Baseline studies at HHD have shown that up to 97% of the variation in numbers of juvenile migrants (coho salmon smolts) passing HHD can be explained by changes in outflow volume and pool depth – the higher the outflow and shallower the outlet depth the higher the passage rate (r^2=0.97) (Dilley and Wunderlich 1993). A longer term adult survival study confirmed these dam passage studies. For tagged coho salmon smolts planted above HHD Reservoir, almost 100% of adult survival can be explained by differences in dam outflow and outlet depth (r^2=0.99). The highest adult survival rate (6%) occurred for outflow volumes approaching the May 50-percent (median) exceedance flow (1,400 cfs) (Appendix F, Part One, Section 2E).

Results from baseline studies at HHD and other high head dams show that successful passage of these spring outmigrants requires a near surface water withdrawal (within the upper 5-30 feet of the water column) that provides sufficient attraction flow: studies at various projects have been inconclusive in identifying a critical threshold flow volume (see discussion in Appendix F, Part One, Section 2d). Such a facility requires that the surface outlet rise and fall with the filling and drawdown of the reservoir covering a vertical elevation range of 107 feet (1,070 feet pool elevation to 1,177 feet elevation). The FPTC initially recommended that the facility draw and screen up to the 10% exceedance flow during the major juvenile outmigration period in April and May (range from 1,800-2,500 cfs Baseline). Later refinements suggested that the median daily flow (50% exceedance, 1,200-1,600 cfs) was the maximum volume any facility could screen and was recommended as the critical design flow for any design alternative considered. Either a multi-port intake, a floating surface screen or a screen with a fish lock would be required to collect and pass these juvenile salmonids downstream through the dam. This alternative was carried forward for further development and evaluation of design alternatives.

b. Alternative 9B – Downstream Fish Passage at the Dam without Water Supply. Existing conservation storage of 25,400 to 30,400 ac-ft results in maximum outlet depths of 77-112 feet. Successful passage of juvenile outmigrants will require the surface outlet to rise and fall over a vertical elevation range of 77 feet (1,070 feet pool elevation to 1,147 feet elevation). As described in Alternative 9A, similar downstream passage means would be used. This alternative was eliminated because it did not meet the project objective to provide for a regional water supply, and the AWS project would become a single-purpose restoration project.

c. Alternative 9C – Upper Reservoir Downstream Fish Passage with Water Supply. Instead of improving downstream fish passage at the dam a new collection facility would be built upstream of the dam and/or reservoir on one or more major reservoir tributaries. This concept addresses concerns that juvenile salmon and steelhead cannot migrate successfully through the enlarged reservoir with additional storage (5.7 miles long). A similar concept has been applied on the Cowlitz River in southwestern Washington and

has been proposed for use in retrofitting existing Corps projects in Oregon. Project features would include one or more collection locations, use of a barrier dam and screening facility, and a means to transport fish such as by truck or in a fish canal. This alternative was carried forward for consideration in combination with Alternative 9A, upstream collection with a dam passage facility.

d. Alternative 9D – Upstream Fish Passage at the Dam with Water Supply. The 221 square miles of watershed above HHD potentially can produce from 15,000 to 35,000 adult salmon and steelhead (pre-harvest). In their upstream migration, two migration barriers, the Tacoma Diversion Dam and HHD block these large salmon and steelhead. If successful passage were provided at the Diversion Dam (fish ladder around the dam), HHD would be the next barrier for the adults to traverse. Adults would either be passed through or around the dam. Successful passage of the majority of adults through the dam would require a means to raise the adults, such as with a fish lock, from the river below the dam, approximately 1,010 feet elevation, to 1,070-1,177 feet elevation, depending on the height of the pool. Passage around the dam would require either a fish ladder or an adult fish trap with truck and haul for release above the dam. A fish lock for downstream fish passage Alternative 9A could have a dual purpose and provide for upstream adult fish passage. This alternative was eliminated as a single design alternative but was carried forward as a potential dual application of Alternative 9A, fish lock for downstream and upstream fish passage.

e. Alternative 9E – Upstream Fish Passage at the Dam without Water Supply. With less reservoir storage, the vertical elevation of the reservoir pool is lower and under certain passage concepts (fish lock) could result in fewer constraints to providing adult fish passage. Successful passage of the majority of adults would require dealing with a vertical elevation from 1,010 feet (river level) to 1,070-1,147 feet (low pool to existing full pool). This alternative was eliminated for the same reason as Alternative 9B; it does not meet project objective to provide M&I water supply.

f. Alternative 9F – Remove Existing Dam To provide near natural riverine conditions and total restoration of fish passage (both downstream and upstream), removal of HHD would be required. Either the dam would be removed or a portion breached to recreate the existing Green River channel for unimpeded passage. This alternative was eliminated, as it does not meet AWS project objectives and would violate existing project purposes for flood control and water conservation (meeting minimum instream flows).

g. Alternative 9G – Trap and Haul Facility at the Tacoma Diversion Dam. As a concept, this alternative is currently being used in several western Washington basins. The Tacoma Diversion Dam is the first complete barrier adult salmon would face in migrating upstream to the Headwaters watershed. A temporary fish ladder and fish trap has been operated at the Diversion since 1991. Since that time, adult steelhead have been captured, trucked and released above the reservoir. Adult salmon are projected to be released beginning in the fall of 1997 or 1998. The Seattle District Corps has built and operated trap and haul facilities at two western Washington projects, Wynoochee Dam and Mud

Mountain Dam. This measure would have the Corps build and operate a permanent facility either at the Tacoma Diversion Dam or at a new location upstream or downstream of the Diversion.

Under terms of a mitigation agreement between the City of Tacoma and the MIT, Tacoma is committed to building a permanent fish ladder, collection ponds, and transportation facility. This facility has dual capacity: 1) a fish ladder that could be opened to allow adults direct access to the river above the Diversion; and 2) a separate route into a collection facility, with adult holding ponds, where adults can be separated for transport either to a supplementation facility or for release above the HHD reservoir. Because of the Tacoma/MIT mitigation agreement, which provides for upstream adult fish passage around HHD, this alternative was not carried forward for further evaluation.

h. Alternative 9H – Eliminate Permanent Pool. This concept follows the progression of less storage going from Alternative 9A to 9B and 9D to 9E. This alternative considers elimination of the existing conservation storage pool (25,400 ac-ft) to create a "run of the river" project with either no pool or a very minimal pool (turbidity control). Elimination of the conservation pool would theoretically eliminate most barriers to downstream and upstream fish passage. Juvenile fish migrating downstream would have a near-surface outlet while adult salmon and steelhead would have to swim upstream through the existing 900-foot-long tunnel. Modification to the existing gates or a new tunnel would be required. This alternative was eliminated because it does not meet the AWS project objective to provide M&I water supply and would violate existing project purposes for meeting minimum instream flows.

2.3.10 Alternative 10 – Fish Culture Alternatives

a. Alternative 10A – Increase Existing Hatchery Production. Hatcheries have been used for more than 100 years in attempts to mitigate the effects of human activities on salmon and to replace declining and lost natural populations: in addition they have been used to expand upon natural production to provide additional harvest opportunities. As a result, a major proportion of salmon populations in the Green River now consists largely of hatchery fish. The purpose of this measure would be to expand existing hatchery programs to provide replacement of lost production from not restoring Upper Green River salmon and steelhead runs, and to mitigate for any adverse impacts to Lower Green River fish from additional storage for water supply. Project features could include 1) expansion of existing hatchery production from Lower Green River facilities; and 2) expansion of the MIT Fish Restoration Facility. This alternative was eliminated for further consideration because it does not meet the project objective to restore fish runs above the dam, it is unacceptable to state and federal resource agencies, and it is not consistent with ecosystem restoration guidance or the Basin Restoration project.

b. Alternative 10B – Permanent Supplementation Programs. Unlike traditional hatchery production where natural production is replaced or attempts to be enhanced, supplementation is meant to assist in the recovery or maintenance of salmon populations.

Integrated planning, management, and operation would be used to minimize impacts to existing natural production and to maximize recovery of populations. This measure would utilize project features constructed to "naturalize" the rearing of juvenile hatchery fish for the life of the AWS project. Specific examples include 1) creation, maintenance, and stocking of permanent natural rearing facilities such as ponds; and 2) expansion of the MIT Fish Restoration Facility that incorporates natural elements in facility design such as "artificial streams" with low densities of rearing fish. This alternative was eliminated for further consideration as it does not meet the project objective to restore fish runs above the dam, it is not consistent with ecosystem restoration guidance or the Basin Restoration project, and, in the Tacoma/MIT agreement, the City of Tacoma has already committed to building and operating an existing supplementation program for the Upper Green through the Fish Restoration Facility.

c. Alternative 10C – Temporary Supplementation Programs. Unlike current hatchery practices in the Green River, this measure would provide a short-term rearing program to provide additional production of salmon and steelhead to "jump-start" the recovery and restoration of salmon and steelhead to the Upper Green River. This would be a short-term measure and would be meant to complement (not replace) the natural rebuilding of the runs. Project features could include 1) creation of additional habitat locations where hatchery reared juveniles could be planted for natural rearing; 2) short-term increases in outplanting of smolt ready juveniles; and 3) development of remote site facilities such as egg boxes. This alternative is not carried forward as a distinct measure but will be incorporated into other habitat improvement measures. As noted in Alternative 10B, the Fish Restoration Facility will be the maintained as an existing supplementation program, however additional locations for planting of naturally reared fish could be created.

2.3.11 Alternative 11 – Habitat Mitigation/Restoration Alternatives

a. Alternative 11A – Side Channel Improvements. Levees, channel degradation, and controlled flows from HHD have reduced the interaction between floodplains and stream channels in the basin. Many areas of the floodplain have been converted to other uses. This has dramatically reduced the interchange of water and materials between the aquatic and terrestrial systems and has isolated floodplain wetlands. The Basin Analysis estimates that only 10% of the original Duwamish/Green floodplain is still connected to the mainstem and is undeveloped. Of the remaining side channel habitat, the AWS project could seasonally dewater an additional 8.4 acres. This measure would maintain existing levels of side channel habitat (mitigation) and provide limited improvement (restoration). Project features could include 1) removal of levees to reconnect the floodplain to the main channel; 2) reconnection of relic side channels by lowering the channel inlet or by raising the mainstem water surface; and 3) improve existing side channel by similar means as in (2) or by other improvements such as large wood placement, excavation of new channel areas, gravel placement and riparian plantings. Project areas considered would range from below the Tacoma Diversion Dam (RM 61) to the lower Middle Green River (RM 34). This alternative was carried forward for further development and evaluation.

b. Alternative 11B – Stream and River Improvements.

(1) Alternative 11B1 – Tributary Stream Habitat Restoration. The construction of HHD and filling of the existing conservation pool has resulted in the elimination or degradation of over 8 miles of river and stream habitat. The AWS project would degrade from 2 to 3 additional miles of stream habitat above HHD. This habitat represented(s) some of the most productive salmon and steelhead habitat in the Upper Green River. Since dam construction, much of the Upper Green River has been logged with associated degradation of stream habitat in areas above HHD. While this habitat is degraded from pre-management conditions, it is still considered higher quality habitat or has much greater recovery potential than much of the Lower Green River stream habitat. This alternative considers different structural and management means to improve the function of existing habitat in streams above HHD. Project features could include 1) replacing culverts that block the movement of juvenile and adult fish; 2) placement of large wood (logs and rootwads) and boulders to provide habitat complexity; and 3) use of plantings and thinnings to improve riparian habitat along stream corridors. Individual habitat alternatives were developed in plan formulation refinement. This alternative was carried forward for further development and evaluation for areas near the dam, within the existing and proposed enlarged reservoir, and above the reservoir.

(2) Alternative 11B2 – Gravel Placement. The disruption of sediment transport from the Upper Green River due to the interception of almost all coarse sediment and gravel by construction and operation of HHD may be causing fundamental changes in the lower mainstem channel and associated habitats. One concern is the elimination of spawning gravels for salmon and steelhead in areas downstream of HHD. Reduction in peak flows (>12,000 cfs) and increases in moderate flows (4-12,000 cfs) appear to be causing this condition to continue farther downstream. Overall the channel is down cutting, causing a resultant channel instability which is aggravated by losses of riparian vegetation. This alternative would provide for annual placement of gravel-sized material in areas downstream of the Tacoma Diversion Dam. So that flood protection would not be impacted, total sediment volumes considered would be less than pre-dam natural sediment transport rates. This alternative was carried forward for further development and evaluation.

(3) Alternative 11B3 – Truck and Haul of Large Wood. Just as HHD Reservoir stores water and traps sediment, large wood (trees and rootwads) is washed into the reservoir and collects in stream channels or on floodplain terraces. This wood would normally be transported further downstream or would stay in place – providing a variety of hydrologic and biologic functions. Until recently, under project operations and maintenance, the wood was annually collected, stored, and burned. This alternative would involve 1) collection of the large wood; 2) transport of the wood by truck to below Tacoma Diversion Dam; and 3) placement of the wood in the active channel without anchors so high flows can carry it downstream. This type of collection and replacement of wood below a storage dam is being implemented at least one other western Washington project. This alternative was carried forward for further evaluation.

(4) Alternative 11B4 – Large Woody Debris Management for Fish and Wildlife Habitat. This alternative would set aside and utilize large woody debris (LWD) collected during HHD operations for fish and wildlife habitat restoration projects throughout the basin. This operational measure has just begun to be implemented under the existing operations and maintenance program for the dam. The AWS project would continue this practice. Logs would be set-aside by HHD staff in debris clearing areas for eventual pick-up and transport by resource agency or non-profit groups for use in habitat restoration. This alternative was carried forward for further development and evaluation.

Large woody debris would also be placed in terrestrial habitats to provide additional food and denning places for terrestrial mammals and birds.

c. Alternative 11C – Reservoir Improvements. Improvements to instream habitat within the reservoir are described in Alternative 11B1.

(1) Alternative 11C1 – Create Sub-Impoundments Around Reservoir. This measure would provide wetlands and/or ponds along the reservoir shore for wildlife and fish utilization. Sub-impoundments are designed to flood during high reservoir pool elevations and maintain surface water by containment during reservoir drawdown. Sub-impoundments offer an increase in habitat by trapping and holding water for a longer period of time and by making open water habitat for fish, waterfowl, and amphibians available for longer periods after reservoir drawdown. This alternative was carried forward for further development and evaluation.

(2) Alternative 11C2 – Place Water Tolerant Plants in the Inundation Zone. Under the AWS project pool raise, increasing the HHD reservoir pool from 1,147 feet elevation to 1,177 feet elevation will inundate 478 acres of terrestrial habitat and 17 acres of stream habitat. This measure is targeted to (1) maintain plant communities in areas that will be inundated with the additional storage pool; 2) improve and diversify sparsely vegetated emergent plant communities; 3) facilitate transitions from current native plant communities to plant community types that are more tolerant of inundation; 4) stabilize the reservoir inundation zone and reduce wave-action-related erosion along the shoreline; and 5) maintain and restore fish and wildlife habitat. Water-tolerant plants selected must survive short and long periods of inundation, as well as a shortened growing season. Plant types could include: Columbia sedge, inflated sedge, Kellogg sedge, Lyngbye's sedge, bald cypress, Oregon ash, and Pacific willow. Similar aspects of this measure will be implemented in the year 1999 for areas below pool elevation 1,147 feet under the HHD Section 1135 project. This alternative was carried forward for further development and evaluation.

(3) Alternative 11C3 – Leave Inundated Trees in the Enlarged Storage Pool. In the new inundation zone (1,147 to 1,177 feet elevations) retain existing standing timber to partially maintain wildlife, riparian and instream habitat. As discussed in Alternative 11B1 and 11C2, miles of stream habitat and hundreds of acres of terrestrial habitat will be

inundated with an enlarged pool. This habitat will be degraded and much of it will become functionally unusable by target species. Traditionally, the Corps has executed full clearing of all vegetation prior to reservoir filling. Recently, a number of Corps water development projects have left many if not most trees for fish and wildlife habitat (Laufle and Cassidy 1988) . This approach could be used with the AWS project to maintain fish and wildlife habitat for a period of time and could result in less mitigation. This alternative was carried forward for further evaluation.

d. Alternative 11D – Terrestrial Habitat Improvements above the Riparian Zone.

(1) Alternative 11D1 – Accelerate Forest Development to Late Successional Stage. This measure would accelerate the development of late-successional characteristics (large diameter snags and down wood, multi-story canopy, and increased understory cover and diversity) in conifer and mixed forest stands on Tacoma-owned lands near the Howard Hanson Reservoir to increase the acreage of timber stands managed as late-successional forest habitat in the upper Green River watershed. This alternative was carried forward for further development and evaluation.

(2) Alternative 11D2 – Elk Pastures. Initial planning efforts targeted forested areas for conversion to pastures to supplement elk forage areas and replace existing foraging areas that would be lost to inundation from the pool raise. Resource agencies expressed concern over further loss of forests, and wondered if pastures couldn't be located elsewhere. The Tacoma Water Division identified power-line rights-of-way as suitable areas for conversion to pastures. Rights-of-way are currently classified mainly as young deciduous, or, in some cases, upland shrub. The rights-of-way are managed for these habitat conditions, as the power companies do not want tall trees growing under the power lines. Thus, they make ideal situations for pastures, not only because trees would be excluded and pastures would be maintained, but also because the existing habitats are not considered to be high quality for any species of wildlife, so that the loss of habitat through conversion to pastures is less than the loss resulting from conversion from a higher quality habitat, such as mature conifer forest. This measure was carried forward for further consideration..

2.4 PRELIMINARY SCREENING OF ALTERNATIVES

As is required with all COE studies the No Action (Without Project) Alternative is carried forward for further discussion.

2.4.1 Water Supply Alternatives

Water supply measures were preliminarily screened and either eliminated from further evaluation or were included as potential alternatives to Howard Hanson and carried forward for further analysis. Each measure was screened at this stage by considering the preliminary planning criteria. Criteria used to screen alternatives is described above in Paragraph 2.2.2. Using this screening criteria, water supply alternatives eliminated from

further evaluation were: Alternative 3A, Wells in Lower Puyallup Lowlands; Alternative 3B, Wells in Lower Puyallup Uplands; Alternative 3C, Wells in Clover Creek and/or Chamber Creek Areas; North Bend Aquifer; Alternative 5B, Water Purchase From Auburn; Alternatives 6A, New Storage in Green River Basin (Smay Creek) 6B; Dam on Puyallup River; 6C, Dam on Nisqually River; and 6D, Dam on Skagit River. Reasons for eliminating each of these measures are discussed in the write up of each alternative in Paragraph 2.3.1.

2.4.2 Low Flow Augmentation Alternatives

The two low-flow augmentation alternatives, 7A and 7B, were screened using the planning criteria. Both alternatives had desirable features for most of the criteria. Criteria that was most significant for selecting a preferred alternative are tabulated below.

SIGNIFICANT PLANNING CRITERIA FOR LOW FLOW AUGMENTATION SELECTION

Low Flow Augmentation measures must be:	• acceptable to federal and state resource agencies, tribes, and sponsor. • must address overriding environmental problems. • consistent with existing fish and wildlife management. • cost-effective per unit of output.

Alternative 7B was favored over 7A for all 4 of the significant criteria. Resource agencies and the Muckleshoot Indian Tribe had unanswered questions with Alternative 7A. Alternative 7B addressed overriding environmental problems based on current fish management practices. Costs were not quantified; however, Alternative 7B had more predictable and effective outcomes than 7A. Alternative 7B, which mimicked natural hydrology, was carried forward in the planning process for further evaluation.

2.3.4 Water Quality Alternatives

Water quality is considered dependent on downstream fish passage improvements. Each measure was screened at this stage and reviewed by the FPTC for consistency with design criteria, and were considered as to whether the alternative could realistically be implemented. The water quality measure eliminated for further consideration was Alternative 8B, Provide Temperature Control at the Dam <u>without</u> Water Supply. Alternative 8A was carried forward in the planning process for further evaluation.

2.4.4 Fish Passage Alternatives

Fish passage alternatives were preliminarily screened using the criteria in Paragraph 2.2.2, and either eliminated from further evaluation or were included as potential alternatives and carried forward for further analysis. Each measure was reviewed by the FPTC for consistency with design criteria and considered as to whether the alternative could

realistically be implemented. In cooperation with the FPTC, the Seattle District initially developed a list of hydraulic design criteria to evaluate the technical feasibility of downstream fish passage facility concepts. These criteria are listed by facility components, juvenile bypass and screen, and can be found in the FPTC (1990) report.

Fish passage alternatives eliminated from further evaluation were: Alternative 9B, Downstream Fish Passage without Water Supply; Alternative 9E Upstream Fish Passage at Dam without Water Supply; Alternative 9F, Remove Existing Dam; Alternative 9G, Trap and Haul Facility at the Tacoma Diversion Dam; and Alternative 9A, Eliminate Permanent Pool. Reasons for eliminating each was discussed in the write-up of each alternative in Paragraph 2.3.9. Alternative 9D, Upstream Fish Passage at the Dam with Water Supply was not carried forward as a distinct measure, but potential features of this measure (upstream adult passage) could be incorporated into measure 9A, Downstream Fish Passage at the Dam, if the fish lock design were implemented. Also brought forward for further consideration was Alternative C, Upper Reservoir Downstream Fish Passage with Water Supply.

2.4.5 Fish Culture Alternatives

Fish culture alternatives were preliminarily screened, and each was eliminated from further evaluation: Alternative 10A, Increase Existing Hatchery Production and Alternative 10B, Permanent Supplementation Programs. Alternative 10C, Temporary Supplementation Programs, was not carried forward as a distinct measure but potential features of this measure will be incorporated into other habitat restoration and mitigation projects.

2.4.6 Habitat Mitigation and Restoration Alternatives

Habitat mitigation and restoration alternatives were preliminarily screened. Because of the anticipated breadth of the impacts associated with additional storage, there were no habitat mitigation and restoration measures eliminated from further evaluation in the preliminary screening.

SECTION 3. REFINEMENT OF ALTERNATIVES

3.1 REFINED PLAN FORMULATION STRATEGY

3.1.1 Planning Objectives

The refined water supply objective is consistent with the preliminary planning objective in Paragraph 2.2.1. There was a refinement of the restoration objectives No. 2 and 3. This refinement led to three aquatic resource objectives:

1) to have no net loss of lower watershed habitat while maintaining existing anadromous salmonid populations;

2) restore natural, self-sustaining runs of anadromous salmonids in the headwaters watershed; and

3) restore selected aquatic habitat limiting factors of the Lower watershed.

Refined restoration objective No. 1 is related to mitigation requirements. Storing additional water for water supply and flow augmentation during the spring will impact several features of the Lower Green River including – 1) connection of remaining floodplain habitat areas (side channels) to the mainstem; 2) instream migration of juvenile salmon and steelhead (survival of downstream migrating fish); and 3) dewatering incubating steelhead eggs. Upper Green River habitat (above HHD) is affected by additional storage but these impacts are largely unavoidable and require appropriate mitigation. This objective seeks to avoid, minimize, or fully mitigate for any impacts related to storing additional water for M&I and flow augmentation purposes.

Refined restoration objective No. 2 is consistent with the preliminary planning of establishing self-sustaining fish runs in the watershed above the dam. Self-sustaining fish runs are defined as a population (species-specific) of salmon or steelhead that exists in sufficient numbers to replace itself through time without supplementation with hatchery fish. The definition of self-sustaining is related to natural reproduction or spawning by each population, it does not refer to the use of fish passage technology to move fish above or below man-made barriers. Identification of the adult numbers required to meet this objective was developed in this stage.

Refined restoration objective No. 3 is consistent with the preliminary planning objective of limited habitat restoration. The limiting factors addressed by habitat restoration projects are: 1) poor connection of the upper and lower watershed by downstream fish passage at HHD; 2) low flows during summer and fall; 3) poor water quality, water temperature from the dam, and lower river quality; 4) disconnection of floodplain areas to the mainstem; 5)

reduction in spring freshets affecting instream (downstream) migration of juvenile salmonids; and 6) lack of quality riparian and stream habitat.

3.1.2 Refined Planning Criteria

Water supply criteria remain consistent with preliminary planning criteria (Paragraph 2.2.2) and were carried forward with one or two exceptions, additional criteria were added to refine mitigation and restoration measures. This additional criteria is described in paragraphs a and b below.

After the Agency Resolution Process, the Corps and Tacoma began implementing baseline monitoring in areas downstream of HHD to develop a database on steelhead spawning, and side channel habitat. In conjunction with this the Corps and Tacoma implemented criteria and actions to evaluate the operation or implementation of the recommended AWS project phased plan (listed in Paragraph 4.1.3).

a. Water Supply Criteria. Alternative water supply alternatives by themselves or in combination must meet the average summer and/or 4-day peak demands.

b. Mitigation and Restoration Criteria and Assumptions.

(1) To avoid the need for mitigation, all operational and structural means available were used to avoid or minimize impacts of storing additional water for M&I and flow augmentation. A daily hydrologic flow model was used in modeling storage and release of water.

(2) Mitigation needs must be addressed prior to development of restoration projects. Selected projects must meet the full mitigation requirement.

(3) Habitat mitigation projects are evaluated by impact areas: 1) side-channel disconnection; 2) riparian and tributary habitat inundation; and 3) terrestrial habitat inundation (wildlife). Impacts and mitigation for downstream migrating fish (lower river) are incorporated in side channel mitigation.

(4) Least-cost alternatives that fulfill identified mitigation requirements were selected first.

(5) Mitigation and restoration projects must be function or process driven.

(6) Mitigation and restoration project sites were developed and selected based on ecosystem or biological need first. However, real estate considerations were integrated in site development and evaluation with use of public lands first, City of Tacoma lands next, and private lands last.

(7) Incremental analysis and evaluation was one tool used to refine and select among mitigation and restoration alternatives. It was not the ultimate criteria for alternative selection. The authority and direction of mitigation and restoration measures includes best professional judgment.

(8) Restoration projects or sites considered addressed specific aquatic habitat limiting factors identified through AWS project scoping.

(9) A deterministic fish passage model was used to initially evaluate the downstream fish passage alternatives against juvenile fish project survival criteria (95%) and self-sustaining project objective. This model estimated total adult fish run size (pre-harvest numbers) and was used to develop incremental outputs for each alternative. After this, long-term average harvest rates for each species were applied to outputs from each alternative to evaluate which alternative(s) would meet adult spawning escapement goal(s) for each species. The development of these goals is discussed in Section 2a, Appendix F, Part One, the need for naturally reproducing self-sustaining runs is discussed in Paragraph 1.6.5 (this appendix). The goal for each species is 1) 6,500 adult coho salmon; 2) 1,300 adult steelhead; and 3) 2,300 adult chinook salmon. The model is discussed further in Paragraph 3.4.12 (this appendix) and is provided in detail in Section 8, Appendix F, Part One.

(10) In addition to meeting design criteria, fish passage alternatives were assessed based on lessons learned from past project failures and successes in fish passage development. See number 9 above and Paragraph 3.4.12.

(11) If no fish passage alternative can provide 95% project survival, the recommended fish passage alternative must provide project passage survival rates and estimated adult returns that meet or come near the restoration objective of self-sustaining runs. The larger reservoir created by storing an additional 32,000 ac-ft may preclude reaching the target survival rates. Monitoring will take place before the project is fully implemented to determine the impact of the larger reservoir on the migrating fish.

(12) The recommended fish passage alternative must meet approval of FPTC and Resource Agency Directors. Through the Agency Resolution Process, Directors from NMFS, USFWS, and WDFW gave conditional approval to the AWS project based on development of a fish passage alternative that met all design criteria.

(13) An ability to screen the 50% exceedance flow (late April thru May) through a surface inlet is the most critical design feature for providing successful attraction and entrainment of smolts into any fish passage facility. Other juvenile fish passage projects have consistently shown a poor ability to collect fish whenever the majority of flow is going through outlets other than juvenile collection facilities. The original objective of the FPTC was to pass all instream flows through any fish passage facility, structural constraints limited the maximum volume of the fish passage to 1,200-1,600 cfs

(near the 50% exceedance during the major smolt outmigration period). See Paragraph 3.4.12 for further discussion.

(14) The development of fish passage alternatives must recognize that the Green River is a heavily urbanized watershed and therefore higher project survival rates and escapements are necessary to reach self-sufficiency. Less than 3% of estuary wetlands and 10% of the historical floodplain remain.

(15) Dam fish passage alternatives must include a surface withdrawal ability to provide for water quality improvements by blending of warmer surface and cooler lower reservoir water.

3.1.3 Study Advisory Committee

a. Fish Passage Technical Committee. The FPTC, besides developing fish passage design criteria and interacting with the Corps on concept designs, played a critical role in evaluating a fish passage survival model used in creating outputs for an incremental evaluation of all downstream fish passage alternatives. Initially, the Seattle District developed a deterministic fish passage survival model for nine fish passage alternatives using three Green River fish stocks, coho and chinook salmon, and steelhead. The model was a multiplicative model (each parameter multiplied against the previous parameter) made up of 7 parameters affecting total adult return rates (pre-harvest). An initial incremental analysis was conducted by the Seattle District and reviewed by the FPTC. The FPTC did not agree with outputs from the model and requested that the District revise outputs and add another alternative with new outputs. Following this, during the Agency Resolution Process (Process), the FPTC worked with the Corps to develop a tenth alternative that met all hydraulic design criteria developed by the FPTC (design criteria listed in Section 2d, Appendix F, Part One). This alternative came closer to meeting the target survival criterion (95%) than any other design for the least-cost.

b. Agency Resolution Process. The Corps and Tacoma presented a proposal to the agency directors on February 9, 1996, that described a phased approach to the AWS project and the commitment by the Corps and Tacoma to implement adaptive management principles and agreements. Agency directors for the state and federal resource agencies gave conditional support to the AWS project based on this proposal. This conditional support was based on a phased project and development of the FTPC preferred fish passage design. The Muckleshoot Indian Tribe was the one study partner who did not grant conditional acceptance. They remained neutral at this stage in the coordination process.

Under the Agency Resolution Process, the Corps and Tacoma agreed to an adaptive management plan (Plan) for the AWS project. The key elements of the Plan include experimentation, monitoring and analysis, and synthesis of results, followed by adaptive management practices responsive to the scientific results of those efforts. The AWS project Adaptive Management Plan involves: 1) phased implementation of increases in

project storage volumes, so changes in the ecosystem can be studied with long-term monitoring; 2) incorporation of potential changes in project design and management/operation as we learn from phased implementation studies and monitoring; 3) implementation of changes in program structure if monitoring results and outcomes justify changes; and 4) ongoing coordination with agencies and the MIT throughout the project to ensure that good science is incorporated into management strategies and decision making.

Four key issues were identified through the Process that were not originally considered in the early Feasibility Study Phase: 1) achievement of self-sustaining runs of salmon and steelhead; 2) connection of flood-plain habitat to the mainstem (side-channel connectivity); 3) steelhead spawning and egg incubation; and 4) instream migration of juvenile salmonids. These issues became the basis for much of the impact analysis and discussion during the later parts of the AWS project during the later Feasibility Study Phase. These issues resulted in the initiation of the Adaptive Management Plan for areas below HHD. Elements of the plan that were implemented include 1) a side-channel inventory of the lower Green River was conducted; 2) a literature review was completed on instream migration of juvenile salmonids; and 3) a daily flow model for the Green River and the AWS project was developed. The daily flow model became the basis for all impact analyses for the AWS project which resulted in identification of fisheries mitigation requirements.

3.2 WATER SUPPLY ALTERNATIVES

Water supply output of HHD is produced during a 153-day period over the summer/fall time frame at 95% reliability. Of this total number of days, 149 days are considered to represent the average summer demand while 4 days during this same period are representative of the 4-day peak period. During this stage of the analysis, the construction cost and average annual costs of each alternative were computed. In addition, the water supply output, measured in millions of gallons of water produced over the 153 day demand period at 95% reliability, of each alternative was computed. Using the average annual cost of each alternative and its output in million of gallons over the 153 day demand period, the cost per million of gallons was computed. The cost per millions of gallons was then used to rank each alternative in order of their cost. Discussed below are the water supply alternatives than were carried forward in this analysis and evaluated in greater detail. Costs of each alternative are based on October, 1997 prices and 7 and 1/8 percent interest rate.

3.2.1 Alternative 2 – Modification of Howard Hanson Dam

a. Alternative 2A – Additional Water Storage with Fish Passage Mitigation

This alternative was a water supply and low flow augmentation project initially consisting of providing 37,000 ac-ft of storage, from pool elevation 1,141 to elevation 1,177. Since the proposed water supply pool would require juvenile fish to sound to a much greater depth, up to an additional 36 feet, to migrate from the reservoir to the river below and since juvenile fish have difficulty sounding, a fish passage facility was included as the expected method of mitigation.

Since the initial evaluation of this project, the without project condition has changed at the project site. With the passage of an ecosystem restoration authority, the without project condition has change to include the addition of an 1135 restoration project. This project, currently in the process of being implemented, consists of using 5,000 ac-ft of the above 37,000 ac-ft to provide low flow augmentation. Pool elevation for this 1135 project will be from elevation 1,141 to 1,147. This change in the without project condition, reduces the reservoir available for additional low flows. This alternative is described as Alternative 2A in Section 4, Formulation and Evaluation of Final Alternatives.

With passage of an ecosystem restoration authority, another at-site alternative was developed which included ecosystem restoration as a project purpose. This project consists of M&I water supply plus the following environmental restoration components: (1) low flow augmentation, (2) fish passage, and (3) habitat improvements. Numerous low flow scenarios, all of which affect the water supply output of the project, were evaluated in a trade off analysis. See Paragraph 3.4 below for a discussion of low flow augmentation. The goal of the trade off analysis was to try and provide additional water for the fish during the summertime and still be able to meet Tacoma's water supply needs over the 50-year project life. Negotiations finally settled on a project which allocated 9,600 ac-ft of storage to low-flow augmentation and 22,400 ac-ft to M&I water supply. The entire or full project would be developed together and at the same time. This alternative is described as Alternative 2B in Section 4.

Another sub-project was developed, through negotiations with state and federal agencies and project sponsor, which would implement the above project in two separate phases. This project is basically the same as measure 2B above but is implemented in two phases. Phase I provides 20,000 ac-ft of water for water supply – from reservoir elevation 1,147 to 1,167. The 1135 project implemented as part of the without project condition would continue with 5,000 ac-ft of storage provided for low flow augmentation. Prior to implementation of Phase II, adaptive management would occur which consists of monitoring fish movement across the reservoir and through the fish passage facility with a higher pool. Phase II is expected to be implemented about 5-8 years after Phase I. This phase consists of filling the pool to elevation 1,177 which will provide a total of 22,400 ac-ft for water supply storage and 9,600 ac-ft of additional low flow augmentation. . This alternative is described in Section 4 as Alternative 2C.

3.2.2 Alternative 3 – Wells

a. Alternative 3e – Tide Flats –This alternative includes installing two additional wells and pumps capable of producing 2.5 mgd each plus constructing 2,000 feet of transmission pipeline needed to convey this water to Tacoma's distribution system. Water supply produced by this alternative during the May-Sept season – or 153 days – is 765 million gallons.

b. Alternative 3f – Lone Star Sand and Gravel – Construction consists of installing a well and pump plus 15,000 feet of transmission pipeline as well as retrofitting a pump station to achieve a hydraulic gradient of 576 feet. Estimated outputs are measured at 1,423 million gallons over the summer/fall season

c. Alternative 3g – South Tacoma Aquifer – Further analysis of this source of water by Tacoma Water Division has resulted in their decision to proceed with implementing this alternative prior to construction of the proposed project. Hence, this alternative is part of the without project supply of water and has been included as part of Tacoma's existing supply of water. As a result, this measure is no longer an alternative to HHD AWS.

3.2.3 Alternative 4 – Conservation/Demand Management and Industrial Reuse

a. Alternative 4A – Conservation/Demand Management. Tacoma Water Division has evaluated numerous conservation/demand management measures ranking them in order of their cost effectiveness. Out of all the alternatives evaluated, Tacoma has put a package together consisting of their most cost effective measures. These measures include: (1) indoor industrial audit, no devices; (2) commercial/industrial ultra low flow toilet rebate; (3) remote irrigation facilities for parks; (4) remote irrigation of school grounds; (5) single-family self-closing hose nozzle, direct mail; (6) ultra low flow toilets in schools; (7) single-family ultra low flow toilet rebate, direct mail; (8) single-family horizontal axis washing machine rebate, direct mail; (9) public building outdoor water audits, direct mail; (10) public schools outdoor water audits, direct mail; (11) commercial/industrial low flow showerhead; (12) public facilities electronic faucets, direct mail; (13) single-family outdoor faucet auto shutoff, direct mail. Water savings are estimated at 1.3 mgd during the average summer period and 1.8 mgd during the 4-day peak period. Total water savings over the 153-day demand period is 201 million gallons.

b. Alternative 4B – Industrial Reuse. This alternative consists of constructing 4,000 feet of 30-inch water transmission pipeline needed to deliver up to 10 mgd of reclaimed water from a City-owned wastewater treatment plant to the customer, in the paper product industry, plus construction of water filtration, disinfection and storage facilities at the treatment plant.

3.2.5 Evaluation of Water Supply Alternatives

In addition to providing water supply by construction improvements to HHD are the remaining viable water supply measures. These measures consist of Alternatives 3e – Wells in the Tide Flats area of Tacoma; 3f – Conservation/Demand Management; 4 – Wells at the Lone Star Sand and Gravel location; and 7 – Industrial Re-Use as described above. These alternative water supply measures were used to help quantify the value of water produced by HHD over the 50-year project life. Without water supply from HHD, these alternative measures would be implemented as the need for additional water occurs with the most cost effective measure implemented first and the least cost effective measure implemented last. With HHD, these measures would not need to be implemented over the 50-year project life and as such the cost of these measures would be avoided. This avoided cost represents the value of water supply produced at HHD. If the avoided costs are greater than the separable costs (i.e. costs incurred by adding water supply) associated with water supply, then the addition of water supply at HHD is economically justified.

3.3 LOW FLOW AUGMENTATION ALTERNATIVES

3.3.1 Alternative 7B –Mimic Natural Hydrology During Refill and Provide Low Flow Augmentation

Alternative 7B was developed to meet or be consistent with three project objectives: 1) provide a regional M&I water supply; 2) restore upper watershed fish runs; and 3) have no net loss of lower watershed habitat or fish.

This alternative consists of two components following natural hydrology patterns during spring refill (February 15-June 30) and providing low flow augmentation during the summer and fall (July 1-November 15). The concept of having dam outflow releases follow natural hydrology patterns is an evolution of existing HHD management to adapt to yearly, seasonal and daily changes in physical and biological conditions. Since the mid 1980's, resource agencies and the Corps have been monitoring, evaluating and modeling (under AWS or other related projects) various aspects of Green River hydrology patterns and their influence on the habitat use, migration, and survival of juvenile and adult salmon and steelhead. This accumulated knowledge has resulted in the existing project's adaptive management approach to spring refill and outflow releases that seeks to protect existing instream resources while providing for reliability in storing water for summer flow augmentation.

The latest outcome of this adaptive approach has been to model the AWS project spring refill and outflow release to mimic natural inflow patterns. Under Alternative 7B, a daily flow model was developed that uses several refill rules to meet project objectives for protecting instream resources, meeting existing conservation storage requirements, and providing reliability for storing additional water for M&I and flow augmentation under Phase I and Phase II. The primary refill rules that were applied include: 1) a maximum refill rate (rate the reservoir is filled or the difference of inflow-outflow) during the main

smolt outmigration period, April through May; 2) a minimum baseflow throughout the refill period, February 15-June 30; 3) a stage decline of no more than 1 foot from May 1 to June 30 (to protect incubating steelhead eggs); and 4) maintaining natural freshets or creating artificial freshets in April and May (to speed juvenile migrants downstream). Refill rules for the minimum baseflows and freshet volumes varied for wet, normal and dry years.

The refill rules incorporated all baseline information on juvenile fish migration through the reservoir and dam, instream migration of juvenile fish through the lower river, habitat connection of side channels to the mainstem, and steelhead spawning habitat. A discussion of these refill rules and outputs can be found *in Appendix F, Part-One Fish Mitigation and Restoration, Sections 4A and 9*. These refill rules were applied to an existing database of 32 years (1964-1995) of historic Green River flows. The reliability of storing additional water for M&I and flow augmentation for these modeled years was 91 and 81%, respectively.

Descriptions for modeled Phase I and Phase II storage and outflow release are as follows: Phase I of the AWS project expands storage and release capability and flexibility during spring months, but does not expand the storage of water for summer flow augmentation beyond the 5,000 ac-ft available under Baseline drought conditions (existing Section 1135 storage). Phase I of the AWS project provides increased baseflow levels and release of artificial freshets during spring refill months and maintenance of a minimum flow of 250 cfs in the Green River at Auburn throughout the year. Phase II of the AWS project provides for storage of up to 14,600 ac-ft of water each year for instream flow augmentation, instead of the 5,000 ac-ft stored under Baseline and Phase I drought conditions. In addition to storing 14,600 ac-ft of water for instream augmentation, up to 22,400 ac-ft of additional water is stored for M&I purposes. (In the model study the 5,000 ac-ft was stored each year but was quickly evacuated and not modeled for flow augmentation except in drought years. Since the model study, through negotiations with the resource agencies, the MIT, Tacoma, and the COE, it has been agreed that the 5,000 ac-ft of water stored under Section 1135 Authority would be adaptively managed for low flow augmentation every year).

Once the spring refill period was modeled, and additional storage volumes were calculated, a series of flow augmentation scenarios were modeled. These scenarios incorporated instream flow targets from the Muckleshoot/Tacoma Mitigation Agreement (discussed in Paragraph 1.6.2) and from Scenario No. 7. Instream flow targets from the Agreement must be met before Tacoma can divert Second Supply water. Flow target priorities for flow augmentation were 1) meet minimum flows under the agreement; 2) release an artificial freshet in early September (700 cfs); and 3) increase fall spawning flows for chinook and coho salmon (scenario 7/IFIM targets). Table H-2 shows all Phase II refill and flow augmentation targets.

TABLE H-2. PHASE II SPRING REFILL AND SUMMER/FALL RELEASE BASEFLOW TARGETS

Seasonal Flow Condition	Baseflow Target February 15-April 30	Stage Decline[1] May 1 to June 30	Low-Flow Targets July 1 to Sept-15	Sept 16-30	Oct 1-31
Wet	900 cfs	900-400 cfs	300 cfs	400 cfs	450 cfs
Average	750 cfs	750-400 cfs	300 cfs	300 cfs	400 cfs
Dry	575 cfs	575-250 cfs	250 cfs	250 cfs	350 cfs

1. Stage decline refers to protection of incubating steelhead eggs by allowing no more than a 1-ft stage decline at Auburn from May 1 to June 30.

Since Alternative 7B met or was consistent with all three project objectives, this flow augmentation alternative became the recommended alternative and was carried forward to the Final Plan Formulation Stage.

3.3.2 Evaluation of Low Flow Augmentation Alternatives

All flow augmentation alternatives other than 7B were unsophisticated (half-month or weekly) and incomplete (lacking baseline information) flow models. These alternatives used a half-month or weekly database that could not respond to daily fluctuations in inflows and desired outflows: fish and habitat changes occur on a much finer timescale, daily or even hourly. The alternatives were modeled to provide refill reliability under historic flow conditions but did not incorporate all available baseline information on instream resources such as juvenile migration, side channel connection, and steelhead spawning. This information is considered critical for analysis of the impacts of additional water storage on existing resources and to evaluate means to avoid, minimize or mitigate for these impacts.

Therefore, Alternative 7B is the recommended alternative as it meets the three project objectives by utilizing a daily flow model that incorporates all existing baseline information on anadromous fish and instream habitat.

The recommended alternative, 7B, improves instream resources over baseline conditions by maintaining summer low flows and increasing available rearing habitat for juvenile salmon and steelhead. Modeled flows from Alternative 7B were also used to increase summer and fall flows for meeting or exceeding: 1) minimum flow volumes and depths for adult upstream migration; 2) increasing adult holding habitat; 3) creation of one late-summer freshet to help draw salmon to preferred upstream spawning areas; and 4) meeting preferred fall spawning flows. An associated benefit of flow augmentation is the potential reduction in stream temperatures. Elevated water temperatures can stress or kill juvenile or adult salmon and steelhead, delay spawning, and kill incubating eggs. This potential improvement in water temperature can come from increased stream velocities, pool depths, and wetting of side-channel areas (cool-water refugia).

To date, the only quantified output of flow augmentation under Alternative 7B is a measurement of increased used habitat area for chinook spawning. Releasing flow augmentation water during October would increase average flows at Auburn by approximately 66 cfs. An instream flow study of the Green River conducted by the Washington State Department of Ecology (Caldwell and Hirschey 1989) indicated an increase in average flows from 373 cfs to 439 cfs would provide an additional 3,484 ft^2 of potential chinook spawning area (weighted usable area (WUA)) for every thousand feet of river. During 29 of 32 years modeled, sufficient storage volume would be available to maintain baseflows of at least 400 cfs from 1 October through 31 October.

3.4 FISH PASSAGE ALTERNATIVES

Ten distinct downstream fish passage alternatives were developed (10% design) for evaluation by incremental analysis, for review by the FPTC, and political acceptance by the resource agency directors through the Agency Resolution Process. (See Plates 1 - 50.)

3.4.1 Alternative 9A1 – Add a Pinch Valve to the Existing 48 inch Bypass Pipe

This alternative consists of only a modification of the existing bypass outlet to provide for more fish friendly outlet conditions through addition of a 4 feet diameter pinch valve. This alternative met few of the fish passage design criteria, did not provide temperature control, and was eliminated for further evaluation.

3.4.2 Alternative 9A2 – Alternative 9A1 Plus Smoothing of Pipe Curves

This alternative consists of Alternative 9A1 (above) in addition to smoothing the three downstream bends in the existing 4 feet bypass. This alternative, while a slight improvement over 9A1, met few criteria and was eliminated from further evaluation.

3.4.3 Alternative 9A3 – Alternative 9A1 and 9A2 Plus Wet Well Chamber in the Existing Tower

This alternative consists of a combination of Alternatives 9A1 and 9A2 (above) in addition to excavation of a wet well chamber within the existing intake tower. This would consist of an extension of the existing bypass intake port from elevation 1,068 to elevation 1,140 providing near surface collection: with a sliding trash rack and panels in the gate guide slots. This alternative provides for a small surface outlet but did not meet many of the design criteria and was eliminated from further evaluation.

3.4.4 Alternative 9A4 – Alternative 9A1, 9A2, and 9A2 Plus Surface Collector on the Existing Tower

This alternative consists of a combination of Alternatives 9A1, 9A2, and 9A3 above in addition to a surface 'gulper' collector similar to that used at Green Peter Dam on the Santiam River in Oregon. It would be mounted on the existing intake tower and gate lift hoist structure. Maximum discharge capacity is dependent on pool elevation and bypass pipe: 400-550 cfs. This alternative provides for a surface outlet, meets many design criteria, but fails to meet flow capacity criteria and several other critical design criteria. By not meeting design criteria, and in particular the flow capacity criteria, this alternative did not meet the project passage survival criteria and therefore could not meet the objective of self-sustaining runs. This alternative was selected during an initial incremental evaluation as providing the greatest output for the least-cost but was eliminated following the revision of other design alternatives and to the fish passage model.

3.4.5 Alternative 9A5 – New tower with Single Lock/Single Screen Connected to the Existing Tunnel

This alternative consists of a new intake tower with a single modular incline screen (MIS) and single fish lock. A live box would capture fish within the lock when the lock is being evacuated. Separate open channels would carry flow from the fish bypass and lock evacuation. Flow from the lock eventually combines with the existing flood control tunnel. It has a maximum discharge capacity of 560 cfs. This alternative meets more criteria than Alternative 9A4 but still fails to provide desired attraction flows (flow capacity). It was not incrementally selected or recommended by the FPTC.

3.4.6 Alternative 9A6 – New Tower with Single Lock/Single Screen and New Tunnel and Stilling Basin

This alternative consists of a new intake tower same as for Alternative 9A5 above with a single MIS screen and fish lock, except that outflow conduits will be routed through a new tunnel about 2,000 feet long to a portal area downstream of the existing spillway discharge point. It has a maximum discharge capacity of 625 cfs within screen criteria. This alternative meets more criteria than Alternative 9A4, has slightly greater discharge capacity than 9A5 but still fails to provide desired attraction flows (flow capacity). It was not incrementally selected or recommended by the FPTC.

3.4.7 Alternative 9A7 – New Tower with Double Lock/Double Screen and New Tunnel and Stilling Basin

This alternative consists of a new intake tower as for Alternative 9A6, except that it uses two intake horns, two MIS screens, and two fish locks. And like Alternative 9A6, the outflow will be routed through a new tunnel to the downstream portal and stilling basin. It has a maximum discharge capacity of 1,250 cfs within screen criteria. This design alternative met all design criteria but was not incrementally selected during the initial or

final incremental analysis and evaluation. This alternative was not considered as feasible as the recommended Alternative 9A8 due to increased design and operation complexity from two locks.

3.4.8 Alternative 9A8 – New Tower with One Enlarged Screen in Single Lock and New Tunnel and Stilling Basin

This alternative is the recommended alternative and consists of a new intake structure located adjacent to the left side of the existing flood control outlet tower. The fish passage facility would house one enlarged MIS and a single fish lock. Fish would be screened from the attraction flow, fed into the lock chamber and then transported downstream of the dam via a 2 foot diameter pipe through the existing flood control tunnel and exited into the Green River. The larger amount of attraction flow would pass through the MIS and be routed through a new tunnel and into the existing flood control tunnel. This alternative meets most of the design criteria and in particular meets the critical criteria of screening the 50% exceedance discharge of 1,250 cfs. This alternative was not developed at the time of the initial incremental analysis and evaluation and was therefore not included in that evaluation. It was subsequently developed during the Agency Resolution Process. Based on the results of the fish passage evaluation process and the opinion of the FPTC team of experts, this alternative provides the greatest potential for fish passage success at the least cost than any other alternatives evaluated. As such, this alternative is the FPTC's recommended alternative as well as the politically accepted alternative by the various Agency Directors.

3.4.9 Alternative 9B1 – Fish Collector above Reservoir with Truck Transport

The longest reservoir distance smolts must migrate is from the confluence of the mainstem Green River to the dam (4.3 miles at 1,141 feet to 5.7 miles at 1,177 feet). This alternative consists of an upstream collector on the mainstem Green at elevation 1,181 feet. Up to 80% of all potential smolt production in the watershed above HHD occurs above this point. The collector consists of a bank of 4 MIS, a permanent spillway, a seasonal rubber dam (March 15-September 30). Transport would be by truck around the project. A holding facility would be at the collector and release would be at the Palmer Rearing Ponds. The facility was designed for a maximum screening capacity of 2,200 cfs (10% exceedance flow). This design was not reviewed as a single design, it was considered in combination with dam passage alternatives. In the initial incremental analysis, this alternative, when combined with Alternative 8A4 was incrementally justified as the least-cost alternative that nearly met escapement goals under most scenarios.

The FPTC rejected this combination because this alternative, 9B1, has major risks associated with it that dam passage does not – trucking fish can increase stress, incidence of predation, disease transmission, and may reduce homing ability of adults. Lastly, even screening the 10% exceedance flow can result in less than desired fish collection efficiency: up to 20% of all smolts can be migrating during these freshets and could pass beyond the facility.

3.4.10 Alternative 9B2 – Fish Collector above Reservoir with Flume Transport

This alternative consists of an upstream collector on the mainstem Green at elevation 1,181 feet. The collector consists of a bank of 4 MIS, a permanent spillway, a seasonal rubber dam (March 15-September 30), and open channel around the reservoir using the railroad grade (approx. 5.5 miles) to Bear Creek. MIS meet all screen criteria. This alternative was rejected by incremental analysis and for the same reasons as Alternative 9B1. Transport by flume involves other issues (confinement, increased water temperature, real estate along an active rail line) but was considered a fall-back option should Alternative 9A8 prove less than successful.

3.4.11 Fish Passage Alternative Combinations

In addition to the 10 single fish passage alternatives described above, combinations of alternatives were evaluated. The concept of combining alternatives was to address passage improvements at the dam with a single fish collector above the reservoir on the mainstem Green River (Alternatives 9B1 or 9B2). This concept addresses limitations that each individual concept is constrained by: 1) even with the best facility at the dam a number of smolts may not reach the dam through an enlarged reservoir; and 2) to collect all fish before they reach the reservoir, fish collectors would be necessary on 3-5 tributaries. Combinations of one dam passage facility (9A1-9A8) with one fish collector (9B1, 9B2) were evaluated. In the initial incremental analysis, Alternative 9B1 when combined with Alternative 9A4 was incrementally justified as the least-cost alternative that met escapement goals under most scenarios. The FPTC rejected this combination as being unnecessary, that a single dam passage improvement should be adequate in providing passage. The combination of having to operate two passage facilities presented additional concerns about operation. Plus, this alternative would have all the risks associated with trucking of juvenile fish enumerated in Paragraph 3.4.9.

3.4.12 Evaluation of Fish Passage Alternatives

Selection of the recommended fish passage facility is based on four areas. 1) scientific understanding of fish passage needs; 2) potential for restoring fish runs in the Green River; 3) technical feasibility and incremental analysis in meeting the restoration objective, and 4) continuity with the Ecosystem Restoration Authority final selection criteria (EC 1105-2-210). Because the fish passage facility represents the major engineering and construction cost feature of the AWS project, this section presents a longer evaluation discussion than other sections of this appendix. Total construction and average annual cost for each fish passage alternative can be found in Appendix B. Discussion of the fish passage model used in the incremental analysis can be found in Appendix F, Section 8, Part One.

a. Scientific Understanding of Fish Passage Needs. Selection of the recommended facility is based on three fundamental methods of scientific understanding of natural systems – experimentation, observation, and deduction. There is a long history of

laboratory and flume experiments on the swimming ability of young salmon and the hydraulic conditions they are able to perform well in. In fact, Milo Bell, one member of the FTPC, performed many experiments for the Corps and is author of the Corps Fisheries Handbook on fish passage design (Bell 1991). This large body of information was heavily utilized by the FPTC in developing many of the initial fish passage design criteria for the AWS project (FPTC 1990). This information was particularly useful in delineating the needs for redesigning conditions within any fish passage facility, for passage through confined and unconfined pipes (pressurized and unpressurized). What was not available from these controlled laboratory conditions were real-world experiments in applying different juvenile fish passage facility concepts at high-head dams.

For the past 40 years various fish passage facilities have been tried at high head dams, these could be considered "experiments." These experiments typically overestimated the potential success of the facility and the assessment of productivity (juvenile survival and adult returns) the facility could sustain. Those facilities that are still in use have resulted in reduced natural productivity, with long term declines in recruitment of new fish and either stabilization at a lower population level (using hatchery fish) or have led to die-off (extirpation) of fish runs. Two examples from Corps projects include – 1) Wynoochee Dam which had an experimental multilevel outlet, it is estimated that between 50-65% of the juvenile outmigrants are not "collected" by the outlets and up to 25% of the collected fish are killed during outlet passage (Dunn 1980; Matthews 1980); and 2) Green Peter Dam used a surface collector (a version of Alternative 9A4), the collection efficiency of this facility was never greater than 45-55% and the facility has been abandoned (Summit Technology 1995). These experiments have been costly, the Corps is having to revisit both of the above projects (plus several others) to evaluate if they can be retrofitted to provide better survival. In addition to the experiments of past fish passage facilities the Corps has used site-specific experimentation at HHD to identify the passage needs of outmigrating fish. A refill test at the project provided the strongest evidence for the need for high outflow and shallow outlet depths to safely pass fish (Dilley and Wunderlich 1993).

A second fundamental tool in scientific understanding of natural systems is observation or learning from "historical experience" (lessons learned). The conditions necessary for good observation results are 1) a wide range of treatments have been applied; 2) the systems treated were similar to begin with; and 3) the treatments produced different outcomes. For the purpose of understanding fish passage at high head dams, the Corps has examples that meet some of these conditions. A number of fish passage facility treatments ("experiments", see above) have been tried in the past, mostly between the 1950's to the 1970's. These treatments were also on similar river systems with similar fish (salmon and steelhead). What is lacking in these treatments are long-term monitoring and evaluation programs (to identify facility shortcomings) and there has been little data since. These treatments have usually produced similar outcomes, poor passage survival of fish or in some cases ultimate die-off of natural runs.

The conclusions of the FPTC regarding these failures were that the dam passage facilities either did not provide sufficient attraction flow and did not collect enough juvenile fish (fish collection) or, in one or two places, there was some problem in the reservoir where the fish never came close enough to the dam to be collected by the facility. Green Peter dam is an example of both conditions, 1) from inception of the facility it had poor attraction and fish collection, and 2) the reservoir was very large (23 miles long) and contained large predatory fish (bass and squawfish). There has been an ongoing concern that the larger reservoir size (of the AWS project) could decrease the number of smolts that reach HHD.

The Corps has compared juvenile salmon and steelhead survival through other large reservoirs and compared these results to the HHD AWS project. These results suggest that the size of the AWS project reservoir (5.3-5.7 miles full pool total length) should not be a major impediment to most juvenile outmigrants. The Corps used Lake Washington, the nearest Corps water control project, as a case study (Paragraph 2.b2-5 and 2e, Appendix F Part One). Salmon (coho, chinook, and sockeye) and steelhead runs have been maintained in this large natural lake (managed as a Corps reservoir) for over 80 years. Recent evidence has shown that the Corps outlet (Hiram M. Chittenden Locks (the Locks)), which has minimal juvenile fish passage facilities, may be the primary factor explaining differences in smolt to adult salmon survival (for coho and possibly sockeye) and not the size of the reservoir. On-site monitoring and the Locks and adult returns suggest there is insufficient flow going through "fish friendly" outlets (surface collector or shallow spillway gates) and most smolts are injured by going through "unfriendly" outlets. State (WDFW), tribal (MIT), and local governments (King County) are supporting a preliminary investigation to provide juvenile fish passage facilities at the Locks.

Baseline monitoring at HHD produced a specific set of observations on fish passage needs 1) the higher the outflow the more fish pass the dam; 2) directly tied to No. 1 is the need for a shallow outlet (or intake); 3) the existing low flow bypass (the 48 inch bypass tunnel) under certain conditions can directly kill up to 100% of all fish; and 4) the faster the reservoir is filled the slower fish reach the dam (see Paragraphs 2b.-2e., Appendix F, Part One). Based on only two years of data, coho salmon smolts passing through the project (reservoir and dam) had a 2 year average survival of 30% (Paragraph 2e., Appendix F, Part One). Survival for chinook salmon smolts passing through HHD is estimated to be lower while steelhead survival is currently unknown. The addition of the larger storage pool with the AWS project (and without fish passage) is assumed to reduce survival even further to a range of 10-20%. Studies throughout Puget Sound have identified the major outmigration period for salmon and steelhead, April through June, as the critical period when most smolts are present at HHD. In an average year, almost 85% of all smolts in the upper Green River will migrate through HHD between mid-April and late May (see Section 5, Appendix F, Part One).

The third and last tool used in understanding natural systems is deduction. There is a severe limitation of learning by observation when a "new" problem with which the Corps has little experience, is presented. The fish passage facility treatments tried before were

conducted when the dams were first built and the wild fish runs were still in place. There has been little or no experience with the situation the Corps has with HHD where an existing dam (with no passage facilities) is retrofitted to restore historical fish runs at the same time a larger reservoir is created (creating a new, unknown affect on fish survival). The issue is – what does the Corps do when forced to extrapolate beyond the range of the Corps' experience, when unable to experiment because of physical or economic limitations? To extrapolate, the Corps must rely on "general principles" combining historical knowledge about key problems in a system with specific functional knowledge about key processes. A general guiding principle in fish passage is that "fish follow flow". This principle has been verified for young salmon and steelhead at virtually every water control project ever studied. Experiments and baseline monitoring at HHD dam have conclusively shown that more fish pass through the dam and reservoir (and survive) at higher project outflow. What is unknown at HHD is the amount of flow required to meet the project objective-survival rate if the Corps builds a new facility. The Corps has limited knowledge because of its inability to specify initial conditions as well as an inability to test the conceptual model from historical data.

The FPTC applied "fish follow flow" as their guiding principle in the formulation of the design criteria of a surface-oriented fish passage facility that could meet the project restoration objective of a self-sustaining fish river. The ability to attract and entrain smolts into a passage facility over the greatest range of flows through all pool elevations was the critical biological need the FPTC applied from lessons learned from the failure of other fish passage projects. The flow principle was listed as one of the hydraulic design criteria – "screen all instream flow". Later this was modified as the lower level of the 50% (median) exceedance flow for April and May, the period of main smolt emigration (85% of all smolts). This can be restated as the desire to "provide the majority of flow for the majority of fish for the majority of the time." The 50% exceedance flow for inflow to HHD is 1,257 cfs, with a range from 1) 1,294 cfs April 1-15; 2) 1,282 cfs April 16-30; 3) 1,315 cfs May 1-15; and 4) 1,137 cfs May 16-31 (1964-1995 CH2M Hill hydrologic database).

b. Potential for restoring fish runs in the Green River. As discussed in Paragraph 1.6.5, the Green River anadromous fish runs have been reduced from 140,000 fish to less than 30,000. The potential for restoring fish runs in the Lower river is severely constrained by urban development and operation of HHD: 97% of estuary wetlands are gone; 90% of the floodplain is no longer flooded on a regular basis; the lower 30 miles of river are largely unusable for spawning and provided limited rearing habitat. In addition, the AWS project presents additional cumulative effects with storing additional water during spring refill, disconnecting side channel habitat, reducing flows during juvenile salmon outmigration periods, and creating a larger reservoir pool. The reconnection of the upper river, through combined upstream fish passage by Tacoma under the Tacoma/MIT agreement, and downstream passage under the AWS project is the greatest single measure available for restoring significant fish runs to the Green River basin. The area above the dam represents a large, unused habitat potential, including over 106 miles

of stream habitat. The habitat above the dam is not pristine, it has also been degraded by timber harvest but remains high quality habitat in comparison to most of the Lower river.

The FPTC, resource agencies, and the Corps had to incorporate the knowledge of the entire river basin production potential into the development and evaluation of the fish passage alternatives. The reduced habitat capacity and habitat quality in the Lower river and reduced quality in the Upper river adds to the uncertainty of restoring fish runs in the Upper river and directly effects the features of a new fish passage facility at HHD. If the Green River watershed were a largely undisturbed river basin the potential for restoring fish runs above HHD might be accomplished with a smaller (less flow), less costly fish passage facility with lower passage survival. The FPTC and agencies recognized the reduced natural production potential of the basin and therefore, held to a standard of high project passage survival (95%).

The Corps assisted in the fish passage evaluation process by developing estimates of smolt production, adult run size (pre-harvest adults), and spawning escapement (post-harvest) for the Upper Green River (see Section 2.a, Appendix F, Part One, and Appendix B). These estimates were used as inputs (smolt numbers) and outputs (adult run size) in a fish passage model during incremental evaluation of the fish passage alternatives. While standard methods in estimating smolt and adult numbers were used, there is a high degree of uncertainty in inputs and outputs. Added to this is the extrapolation (deduction) the FPTC had to use when considering what is necessary in retrofitting a major dam for fish passage combined with effects of a larger reservoir. Many of the FPTC "deductions" (and others) were used in estimating the incremental increases in outputs with each new fish passage alternative. The outputs from the model, while in adult numbers, are highly uncertain being dependent on a series of assumptions and deductions. These outputs are only a tool in evaluating the conceptual fish passage alternatives and should not be considered ultimate outputs of any realized fish passage facility.

c. Technical Feasibility and Incremental Analysis. The FPTC used existing fish passage criteria and developed site-specific criteria for HHD based on unique physical and biological aspects of the system (from baseline monitoring). They also rigorously applied lessons learned from past applications (failures and successes) of fish passage technology on high head dams. The majority of fish passage criteria developed were designed to reduce mortality in the facility itself. There is a solid body of information on the swimming ability of young salmon and the features required to pass them safely through an conduits. There is also solid information on the necessity of providing a facility inlet that is within the depth range of a natural river (hence the term surface collector). What the FPTC couldn't identify from past experiments and monitoring (observations) was the critical flow volume necessary to achieve high collection efficiency. Because of the "fish follow flow" principle, the poor past performance of other passage facilities and the large uncertainty presented with the "new problem" of HHD, the FPTC has pressed the Corps to identify the least cost facility that could provide the greatest flow volume. Throughout the design process the FPTC have held to a principle of a facility that passes all or most of the flow through a surface inlet.

During the FPTC review of different fish passage facilities, the Corps completed two rounds of incremental analysis and evaluation. The initial round occurred prior to the development of the recommended facility, the final round occurred after development and final costing of the recommended facility.

The initial incremental analysis performed by the Seattle District used nine fish passage alternatives and identified two alternatives that met certain design criteria and might be justified as being in the federal interest – 9A4 and 9A4 combined with 9B1. The FPTC reviewed this initial analysis and requested a revision in outputs along with the addition of a tenth alternative, Alternative 9A8. The FPTC rejected outputs developed by the Corps for Alternative 9A4 and the combined 9A4 and 9B1 as being overestimated. They also questioned the concepts and ultimate viability of 9A4 and 9B1. Alternative 9A4 had been previously rejected by the FPTC as not meeting all required design criteria and for providing insufficient attraction flows to pass most smolts (it screens the 95% exceedance flows), therefore it could not even approach requested project survival rates. The concept of upstream fish collection had been rejected early on by the FPTC but the Seattle District reasserted the need for evaluation based on concerns over reservoir passage from the MIT. The majority of the FPTC again rejected the viability of an upstream collector. Re-evaluation of Alternative 9A4 also resulted in reduction of outputs in a follow-on, final incremental analysis.

Following FPTC review of the initial incremental analysis, the Corps and Tacoma entered into the Agency Resolution Process with the FPTC and policy appointees from all resource agencies and the MIT. It was during this process that the tenth design alternative, Alternative 9A8, was identified and developed. Alternative 9A8 is a modification and expansion/refinement of Alternative 9A6 Single Lock, MIS, and New Tunnel, and Alternative 9A7, Dual Lock/MIS and New Tunnel. Through several iterations the concept of a single fish lock and a single MIS was modified to meet nearly all hydraulic design criteria developed by the FPTC (hydraulic design criteria listed in *Section 2d, Appendix F, Part One*). This design met the critical criterion missing from all alternatives but 9A7 – screening the 50% exceedance flow during the main smolt emigration period in late April and May (1,257 cfs). This criterion also resulted in the greatest cost increase going from capacity of Alternative 9A4 to 9A8 – the greater flow capacity required a redesigned intake tower and new tunnels for the lock and bypass outflow.

The ability to attract and entrain smolts over the greatest range of flows was the critical biological need the FPTC applied from lessons learned from other fish passage project failures. However, even with meeting all design criteria, the FPTC and HHD Working Group recognized that the enlarged reservoir with additional storage may preclude reaching 95% survival: estimated survival for 9A8 ranges from 60% for chinook to 85% for coho and steelhead. Therefore, Alternative 9A8 provided the greatest fish output/flow capacity, equivalent to Alternative 9A7, with less complexity (single lock/screen) for the least cost. This design became the preferred alternative of the FPTC and was the

politically accepted alternative by the Agency Directors during the Agency Resolution Process.

A final incremental analysis and evaluation were completed following development of Alternative 9A8. This analysis incorporated the comments of the FPTC and included Alternative 9A8. The final list of alternatives that were selected by the model included 9A4, 9A8, and the combination of 9A4/9B1, 9A8/9B1 and 9A8/9B2 (see Table 2-19, Appendix B). The analysis showed the most obvious and largest incremental cost per incremental output percentage increase (286%) falls between 9A8 and 9A8/9B1. Between alternatives 9A4 and 9A8 there is a lesser incremental cost per incremental output ($94) than between A8 and 9A8/9B1 ($350).

After the final incremental analysis identified this range of alternatives, adult harvest rates and in-river survival estimates were applied to the outputs to identify which alternatives meet the restoration objective or adult spawning escapement: 6,500 coho salmon, 2,300 chinook salmon, and 1,300 steelhead (10,100 total). The figure below shows a comparison between the post-harvest output (escapement) of the initially selected fish passage alternatives, 9A4 and the combination 9A4/9B1, with the FTPC recommended fish passage alternative, 9A8. Alternative 9A4 does not meet the escapement goal (by species, 52-69% of goal) and was rejected by the FPTC for not meeting design criteria. Combined Alternative 9A4/9B1 meets the project objective (91-126% of goal) but was rejected by the FPTC and was more expensive than Alternative 9A8 (92-100% of goal). Although Alternative 9A8 does not provide 100% of the Corps escapement goal it is expected that this alternative has the best possibility of meeting any actual state, federal or tribal escapement goal identified in the future. Based on technical feasibility and incremental evaluation, Alternative 9A8 was recommended as the facility being in the federal interest.

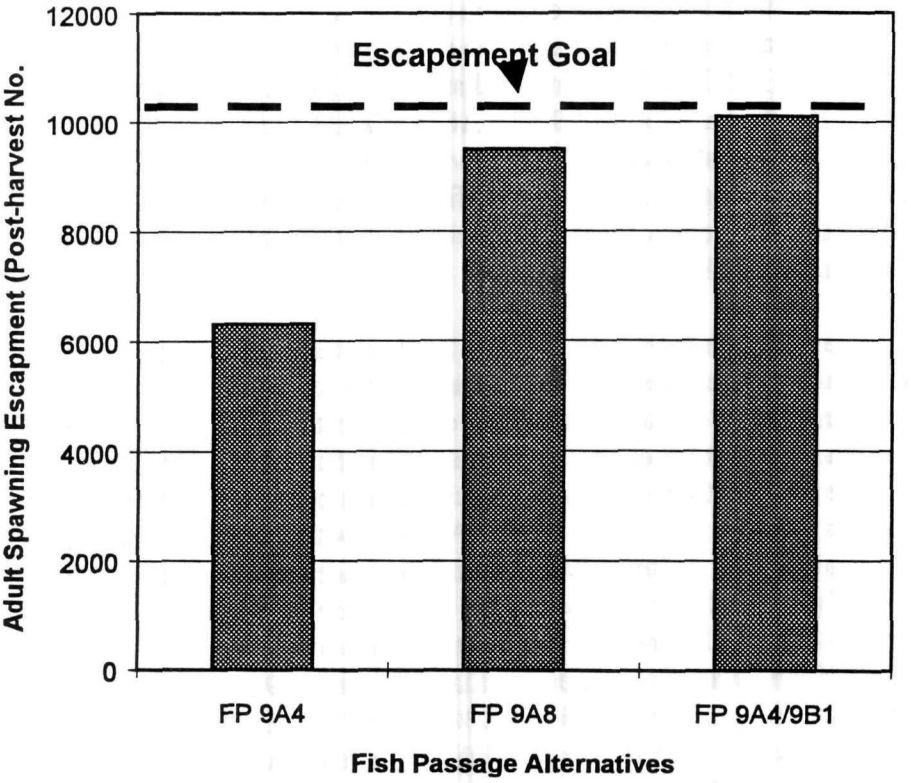

Natural Production of Adult Salmon and Steelhead Through Three Fish Passage Alternatives Under Average Harvest Conditions: Initially Selected Alternatives (FP 9A4, and combination FP 9A4/9B1) and Recommended Alternative (FP 9A8).

d. Continuity with Ecosystem Restoration Authority Final Selection Authority. The Ecosystem Restoration circular (EC 1105-2-210) provides a set of screening criteria for final selection of restoration plans. These criteria are 1) acceptability; 2) completeness; 3) efficiency; 4) effectiveness; 5) partnership context; and 6) reasonableness of cost. The recommended fish passage facility is reviewed against each criteria:

- **Acceptability.** *An ecosystem restoration plan (plan) should be acceptable to state and federal resources and local (tribal) government.* Through the Agency Resolution Process the recommended fish passage facility (and AWSP) has been accepted by Agency Directors from all resource agencies. All other facilities are considered unacceptable. The Muckleshoot Tribe has not accepted the AWSP but is implicitly committed to the recommended facility through the FPTC acceptance.
- **Completeness.** *A plan must provide and account for all necessary investments or other actions needed to ensure the realization of the planned restoration outputs.* The recommended facility is the only one of the two cost-effective alternatives (second

is 9B1/A4) that comes close to meeting the restoration objective of self-sustaining runs. The restoration objective is consistent with state and federal requirements for management for wild or natural fish production and fits within the King County sponsored Green/Duwamish Ecosystem Restoration study. Because of the uncertainty related to the fish passage facility and the AWSP impacts, an adaptive management plan has been proposed and is accounted for in the plan.

- **Efficiency.** *An ecosystem restoration plan must represent a cost effective means of addressing the restoration problem or opportunity (cannot be produced more cost-effectively by another institution).* The fish passage problem at HHD can only be addressed by the Corps and the City of Tacoma is the only sponsor available who has the means and willingness to cost-share the project.
- **Effectiveness.** *A plan must restore an important ecosystem structure or function to some meaningful degree.* The recommended alternative is the most cost effective facility to nearly meet the function of reconnecting the Upper and Lower watershed. Alternative 9B1/9A8 comes closest to fully meeting this criteria (with least uncertainty) but at a prohibitive cost (see *Appendix B* for costs).
- **Partnership Context.** *Projects planned in cooperation with other federal agencies, and those agencies having a significant role in implementing the project should receive higher priority than those who do not.* The recommended fish passage facility has been cooperatively planned with all state and federal resource agencies and the MIT. This restoration project makes a significant contribution to local, state, and federal plans for restoration of wild fish runs.
- **Reasonableness of Costs.** *All costs associated with a plan should be considered including whether the benefits to be realized are worth the cost: this will always be a subjective decision and ultimately must rely on experience, reasonable and "common sense."* The FPTC brings a combined 150 years of experience to the evaluation of the fish passage facilities, the resource agency directors and City of Tacoma (sponsor) bring a measure of reasonableness and "common sense", and they all consider the recommended fish passage facility to be worth the cost for the expected benefits.

3.4.13 Recommended Fish Passage Alternative and Temperature Control

The recommended fish passage alternative provides for selective withdrawal of surface water and water at a fixed elevation close to the reservoir bottom. The design presented calls for a surface intake horn and MIS screen with a capacity of 400 to 1,250 cfs and a submergence depth for the top of the structure, of 5 to 15 feet. Elevation of the intake horn is adjustable with changing reservoir water surface elevation. Meeting temperature targets and providing desired fish passage conditions will require 1) daily monitoring of outflow temperatures and juvenile fish passage; and 2) close coordination between project personnel and resource agencies.

Historic reservoir inflows and projected outflows were modeled for an earlier fish passage facility design with capacity of 200-610 cfs. Under this outflow capacity, maximum target temperatures (59 F) would be met 70% of the time (22 of 33 years) and state water quality standards (60.8 F) would be met 97% of the time (32 of 33 years). In the study

time since this water temperature modeling was completed, the minimum flow capacity was increased from 200 to 400 cfs to meet evolving fish passage screening criteria as requested by resource agencies. The recommended fish passage alternative can be operated for flows as low as 200 cfs, but doing so will probably violate MIS screening criteria. It is unclear if the recommended fish passage facility will meet temperature criteria (at 400 cfs minimum) to precisely the same extent as modeled with the lower minimum flow. During the summer low flow period when outflow releases can fall to below 400 cfs, all outflow from the project will have to go through the surface outlet (to meet project objectives for restoration and successful fish passage) and therefore, could limit use of the deep water outlet to blend flows for temperature control. While this could reduce anticipated benefits somewhat, outflow temperatures will still be greatly improved over existing conditions in most years.

Additional temperature modeling with the revised flow capacity in the final fish passage facility design is recommended. Furthermore, physical modeling of the fish passage facility will more accurately define minimum flows that meet design criteria (200-400 cfs range). These minimum flows could be lower than the estimated minimum of 400 cfs and would provide more flexibility in meeting target temperatures.

3.5 HABITAT MITIGATION/RESTORATION ALTERNATIVES

A list of all aquatic habitat mitigation and restoration projects can be found at the end of Appendix F, Part One-Fish Mitigation and Restoration, Section 8, Appendix Table D-1. A list of all terrestrial habitat mitigation and restoration projects can be found in Appendix F, Part Two, Wildlife Mitigation. A description of all terrestrial habitat mitigation and restoration projects can be found in Appendix F, Part Two, Wildlife Mitigation.

3.5.1 Alternative 11A – Side Channel Improvements

Side-channel projects below HHD were considered for mitigation and restoration. Mitigation requirements are associated with Phase II storage of 32,000 ac-ft of the AWS project. Mitigation requirements are associated with Phase II storage of 32,000 ac-ft of the AWS. Restoration opportunities were related to side channel impacts from original dam construction.

a. Alternative 11A1 – Side Channel Improvements Considered for Mitigation. Six side channel projects were developed and considered for mitigation for areas in the Middle and Upper Green. Mitigation requirement for side channels in the Middle Green River was 6.4 acres; requirement for the Upper Green River was 2 acres. Projects developed and considered were: 1) Mueller Side Channel Improvement, Project No. LVF-01. Mueller side channel is located below Highway 18 at RM 33; 2) Loans Levee Removal and Burns Creek Reconnection, Project No. LVF-03. Loans Levee is located near RM 37; 3) Metzler and O-Grady Connector Side Channel Improvement, Project No. LVF-04. Metzler and O-Grady are King County Parks near RM 39-40.; 4) Flaming Geyser South:

Wetland/Oxbow Reconnection, Project No. LVF-06. Flaming Geyser South is located near RM 44 in a state park; 5) Flaming Geyser North: Cutoff Channel Reconnection, Project No. LVF-07. Flaming Geyser North is located from RM 44-45 in a state park; and 6) Brunner Side Channel Reconnection, Project No. VF-03. Brunner Side Channel is the only project considered for the Upper Green River mitigation requirement; all other projects are in the Middle Green.

The five Middle Green River side channel projects were incrementally evaluated. Three of the five projects were selected, LVF-03, LVF-04, and LVF-07, to mitigate for the 6.4 acres impacted there. The Upper Green River project was selected as it was the only project developed in the Upper Green River impact area.

b. Alternative 11A2 – Side Channel Improvements Considered for Restoration. One side channel project in the Upper Green River was developed and considered for habitat restoration: Signani Side Channel Reconnection and Restoration, Project No. VF-04. This side channel was impacted during original dam construction when the railroad was re-aligned. This side channel and associated floodplain was disconnected from the river and the lower end of the side channel was filled in. Restoration of this side channel would open one of only two significant floodplain areas available for improvement between HHD (RM 64.5) and the Middle Green River (RM 45). This project was incrementally analyzed with Alternative 11B1B.

3.5.2 Alternative 11B1 – Stream and River Improvements

Stream and river improvements near and above HHD were considered for mitigation and restoration. Mitigation requirements are associated with inundation of streams and nearshore habitat during Phase I and Phase II storage of the AWS project and are broken into riparian and stream habitat. Restoration opportunities are associated with impacts from original dam construction.

a. Alternative 11B1A – Stream and River Improvements Considered for Mitigation. Riparian habitat mitigation requirements were 79.2 acres in Phase I and 42.4 acres in Phase II. Stream habitat mitigation requirements were 11.2 acres in Phase I and 5.7 acres in Phase II. Eleven riparian and stream habitat projects were developed for evaluation in meeting mitigation requirements from enlarged reservoir storage. These projects are found from the edge of the existing full pool and continue upstream. These projects were:

Riparian and Tributary Mitigation Projects	Project ID[1]
Page Mill Pond and Page Creek Maintenance	VF-05
Side-channel Enhancement, Mainstem and Smay Creek	VF-06
Mainstem and North Fork Channel Maintenance	MS-02, TR-04
Tributary Stream Channel Maintenance	TR-05
Mainstem and Sunday Creek Habitat Enhancement	MS-04,TR-08
Tacoma Wildlands Set-asides in Conservation and Natural Forest Zones	MS-08, TR-09
Lower Bear Creek Stream Restoration	TR-01
Headwaters Culvert Replacement	TR-10

1. Project Identification: VF = valley floor projects; MS = mainstem Green River projects; TR = tributary projects.

These projects were broken into riparian and stream habitat components for incremental analysis and evaluation. Further, these projects were identified for in-reservoir areas and above-reservoir areas. Discussion of assumptions and habitat unit outputs can be found in Appendix F, Part One, Section 8. Selection of final projects was dependent on meeting the mitigation requirements for riparian and stream habitat areas. Four riparian projects were selected, these projects include maintenance of stream-corridor habitat within the AWS project inundation zone (13.3 acres) and management of riparian forests to accelerate succession on major streams above the project (108.3) acres. Nine tributary or stream projects were selected to mitigate for 17.4 acres of stream habitat. These projects include maintenance of instream habitat within the inundation zone (8.1 acres) and improvement of habitat above the project (8.8 acres).

b. Alternative 11B1B – Stream and River Improvements Considered for Restoration. The construction of HHD and filling of the existing conversation pool affected almost eight miles of tributary stream and mainstem Green River habitat. Two stream and river improvement projects were developed for meeting limited restoration of mainstem and larger tributaries upstream of HHD. This Projects considered were 1) the Howard Hanson Dam Inundation Zone, Project No. MS-01, TR-01 to 03; and 2) Howard Hanson Dam Restoration Zone, Project No. MS-03, TR-06 and 07. These projects were located in two areas: within the existing inundation zone (1,080-1,141 feet elevation) and above the AWS project inundation zone (1,177-1,240 feet).

An incremental analysis and evaluation was conducted with the two stream improvement projects combined with the single, side channel restoration project, Alternative 11A2. There was no clear break in the incremental output and cost for each alternative. The HHD Restoration Zone project was incrementally justified while the HHD Inundation Zone project was the most costly per output. The Signani Side Channel project was intermediate in output per cost. This project was included as a second restoration measure (with the HHD Restoration Zone) based on its critical location and function of providing important rearing and spawning habitat.

3.5.3 Alternative 11B2 –Sites and Volumes Considered for Placement of Gravel

This is a restoration measure to address affects of reduced spawning gravels in the Lower River. Two areas were considered for annual placement of gravel, the Middle Green River from RM 46 to RM 40, and the Upper Green River from RM 60 to 57. In the Middle Green River four possible placement sites were identified. In the Upper Green River three possible placement sites were identified. A brief evaluation of the hydraulic characteristics of the Upper Green River site showed that gravel placement there would be transitory and largely ineffective without incorporating retention structures. Placement in this area was eliminated from further consideration.

Annual volumes considered for the Lower river were 3,900, 7,800, and 11,700 yd^3. These volumes are based on minimum, median, and maximum sediment transport rates estimated for the Green River (*see Appendix F, Part One, Section 4.b*). The least cost level, 3,900 yd^3, was selected as a final restoration measure, This is also the minimum volume considered and while it should have no impact on existing flood protection, monitoring and/or sediment transport modeling will be completed to verify this. This measure is estimated to maintain 400,000 ft^2 of spawning habitat in the Middle Green River over a 50 year period.

a. Alternative 11B3 – Truck and Haul of Large Wood. This alternative has not yet been discussed in sufficient detail with the AWS sponsor, project operations or resource agencies to be included in the list of selected fish mitigation projects. This alternative will be developed and evaluated more during review of the draft feasibility report.

3.5.4 Alternative 11C – Reservoir Improvements Considered for Fish and Wildlife Mitigation

a. Alternative 11C1 – Create Sub-Impoundments Around Reservoir. Sub-impoundments were considered for fish and wildlife habitat. Sub-impoundments directed to fish habitat mitigation are included in one project listed under Alternative 11B1 – Mainstem and North Fork Tributary Maintenance, MS-02 and TR-04. Two sub-impoundments would be created in floodplain areas where the mainstem Green enters the reservoir near 1,160-1,165 feet elevation. In addition, several sub-impoundments will be created just by raising the pool and by overtopping of the abandoned railroad grade. Culverts will be placed in the grade to prevent juvenile fish stranding in these unplanned impoundments. Project MS-02/TR-04 was selected as part of the mitigation features for the AWS project.

In Phase I two sub-impoundments directed to wildlife habitat mitigation are located adjacent to the reservoir: one at the mouth of Cottonwood Creek (wildlife mitigation site #22), the other near the mouth of Gale Creek (wildlife site #26); Phase II would add two sub-impoundments, at wildlife sites #'s 17 and 24. Incremental analysis was useful in selecting sites for each phase, though in fact the final reservoir elevation for each phase played the major role in determining the suitability for each sub-impoundment. The sub-

impoundments would require construction of a constructed berm, designed to be overtopped by the full reservoir, but to retain the water for an extended period after the reservoir drops in mid- to late summer. The intent is to provide stable water levels to promote the growth of aquatic plants and encourage nesting and denning by birds, amphibians and mammals. These are included in the wildlife mitigation plan described in Appendix F, Part Two. Culverts or outlet control structures are included to provide for juvenile fish passage.

b. Alternative 11C2 – Place Water Tolerant Plants in the Inundation Zone. Placement of water tolerant plants was considered for fish and wildlife habitat. Placement of plants for fish habitat mitigation is included in projects listed under Alternative 11B1, Mainstem and North Fork Tributary Maintenance, MS-02 and TR-04, and Page Mill Pond and Creek Maintenance, VF-05. These plantings are identified for areas along streams to maintain stream banks. These projects were selected as mitigation features for the AWS project and should provide 13.3 acres of habitat.

Water tolerant plants directed to wildlife habitat mitigation will be placed in the reservoir inundation zone, mostly within 10 vertical feet of high pool, at wildlife sites #'s 16, 22, 23, 24, and 25; in Phase II, additional sedges will be planted at wildlife sites 11, 22, 23, 24, and 25. Final site selection for each phase was determined by incremental analysis. Approximately 100 acres of sedges will be planted, to replace wetlands that will be drowned by the raised pool, and to provide additional forage to elk during periods of reservoir drawdown. Fish are also expected to benefit from these plants when the reservoir is high. These plantings are described in detail in Appendix F.

c. Alternative 11C3 – Leave Inundated Trees in the Enlarged Storage Pool. In the new inundation zone (1,147 to 1,177 feet elevations) retain existing standing timber to partially maintain wildlife, riparian and instream habitat. This alternative was discussed with the Sponsor (City of Tacoma) and operation personnel. Limited clearing will occur in the new inundation zone. Final selection of areas and/or trees will be reviewed by Sponsor and project personnel.

3.5.5 Alternative 11D – Terrestrial Habitat Improvements above the Riparian Zone

a. Alternative 11D2. For Phase I, one hundred sixteen acres of pastures will be established to provide additional forage for elk, to replace the meadow at MacDonald farm that is currently well used, but will be inundated by the raised reservoir. Phase I sites are 1, 2, 5, 6, 7, 8, and 17. Twenty-nine acres of pastures would be added for Phase II, at wildlife sites #'s 3 and 4. Incremental analysis was the primary tool used in selecting of sites, though some sites were shifted from Phase I to Phase II, and vice versa, based on professional judgment. Juxtaposition of sites with travel corridors was a primary part of the professional judgment selection criteria. Powerline rights-of-way are the first tier selected for pasture creation, where young deciduous forest and upland shrub habitats would be converted to pastures. Pastures will also be created from forested habitat in

order to meet the mitigation target for pastures (approximately 8 acres of mature conifer and 55 acres of mature deciduous will be converted to pasture). Pastures will be fertilized and mowed on a regular basis. Pastures are described in detail in Appendix F.

b. Alternative 11D3. Late Successional Forest Management. Several wildlife mitigation sites are selected for the express purpose of accelerating seral stage characteristics such that they will more closely mimic old growth forests more quickly. The intent is to provide habitat for target species such as elk (which utilize old growth forests for thermal cover as well as for forage in severe winters), southern red-backed voles, and pileated woodpeckers. Other species, such as goshawks, black-tailed deer, and pygmy owls should also benefit from this management. Sites were selected on the basis of incremental analysis. In Phase I, wildlife sites 9, 10, 12, 13, 15, 17, 18, 19, 20, 27, and 28 – totaling about 140 acres – were selected for late successional management. In Phase II, this type of management would be conducted at site 14, and expanded at sites 27 and 28, to total about 115 acres.

3.6.6 Evaluation of Mitigation/Restoration Alternatives

Habitat mitigation and restoration alternatives were incrementally analyzed and evaluated and were eliminated from further consideration or were included in the list of final alternatives. Each alternative was also screened by consideration of the refined plan formulation criteria. The final list of viable and cost-effective habitat mitigation and restoration alternatives are broken into fish and wildlife projects. A summary list of all selected fish mitigation and restoration projects is provided in Table H-3. Total project construction costs for fish habitat mitigation and restoration can be found in Table 1-A of Appendix F, Part One, Section 8. Total project construction costs for wildlife habitat mitigation are found in Appendix F, Part Two, Section IV.

TABLE H-3. SUMMARY OF SELECTED FISH MITIGATION AND RESTORATION HABITAT PROJECTS

Project Package Name	Activity Name	Project Number	Mitigation/ Restoration	Location
Howard Hanson Dam Fish Passage	Dam Fish Passage Alternative 4	FP-04	M/R	Howard Hanson Dam, Right Bank, Intake Tower, 1070-1177 ft Elevation
Headwaters Green River Habitat Mitigation	Mainstem and Sunday Creek Habitat Restoration	MS-04	M	Headwaters Mainstem below Sunday Creek Confluence
Headwaters Green River Habitat Mitigation	Tacoma Wildlands Set-asides in Conservation and Natural Forest Zones	MS-08, TR-09	M	Headwaters Floodplain, RM 71.3-80.1, Gale Creek 1240-1280 ft el., N. Fork 1240-1320 ft
Howard Hanson Reservoir Mitigation Zone	Mainstem and North Fork Channel Maintenance	MS-02, TR-04	M	Headwaters and North Fork in New Inundation, 1146-1177 ft Elevation
Howard Hanson Reservoir Mitigation Zone	Tributary Stream Channel Maintenance	TR-05	M	Tributaries to Reservoir in New Inundation, 1146-1177 ft Elevation
Page Mill Pond Mitigation	Page Mill Pond and Page Creek Maintenance	VF-05	M	North Fork Green Floodplain, Left Bank, 1147-1185 ft Elevation
Bear Creek Channel Improvement	Lower Bear Creek Stream Restoration	TR-01	M	Lower Bear Creek, Below HHD at RM 64
Headwaters Green River Habitat Mitigation	Headwaters Culvert Replacement	TR-10	M	Three tributaries in Headwaters Watershed, two small tribs and one large tributary
Middle Green River Side Channel Mitigation	Loans Levee Removal and Burns Creek Reconnection	LVF-03	M	Middle Green River Floodplain, Right Bank, RM 37.9-38.1
Middle Green River Side Channel Mitigation	Metzler and O-grady Connector Side Channel Improvement	LVF-04	M	Middle Green River Floodplain, Left and Right, RM 39-40.2
Middle Green River Side Channel Mitigation	Flaming Geyser North: Cutoff Channel Reconnection	LVF-06	M	Middle Green River Floodplain, Right Bank, RM 44.3
Upper Green River Side Channel Mitigation	Brunner Side-Channel Restoration	VF-03	M	Upper Green River Floodplain, Right Bank, RM 58
Howard Hanson Reservoir Restoration Zone	Mainstem, North Fork and Tributary Restoration	MS-03, TR-06, TR-07	R	Headwaters, North Fork, Reservoir Tributaries, 1177-1240 ft Elevation
Upper Green River Side Channel Restoration	Signani Side-channel Reconnection and Restoration	VF-04	R	Upper Green River Floodplain, Left Bank, RM 58.6-59.6.
Mainstem Green River Gravel Nourishment	Middle Green River Gravel Bar Nourishment	LMS-01, LMS-02, LMS-03, LMS-04	R	Middle Green Mainstem, 4 Alternate Locations, RM 40-45

SECTION 4. FORMULATION & EVALUATION OF FINAL ALTERNATIVES

4.1 FINAL PLAN FORMULATION STRATEGY

4.1.1 Planning Objectives

The Agency Resolution Process resulted in a dramatic change in AWS project objectives. In addition to the refined objectives, the final AWS planning objectives now include 1) Phased Implementation of the project; and 2) adaptive management planning for pre and post-project conditions. Objectives of Phased Implementation include:

Phase I

- Initiate efforts to establish self-sustaining runs of historical upper Green River anadromous stocks (steelhead, coho salmon, and potentially, fall chinook).
- Maximize salmon and steelhead smolt survival through the reservoir and the dam fish passage facility.
- Establish baseline conditions (through inventory and monitoring) for middle and lower Green River anadromous stocks (habitat availability and use, migration/flow survival relationships).

Phase II

- Optimize the (potentially) competing objectives of 1) maximum smolt survival through the project, 2) flow-augmentation and municipal water supply, and 3) minimizing impacts to lower watershed fish resources.
- Establishment of self-sustaining runs of upper Green River anadromous stocks (steelhead, fall chinook and coho salmon).

The wording regarding self-sustaining runs between Phase I and Phase II is important. Phase I project purpose is to <u>initiate</u> efforts towards restoration of self-sustaining runs while Phase II is <u>establishment</u> of self-sustaining runs. There a number of factors affecting restoration of self-sustaining runs and it will take time to implement activities that can assist restoration of these fish runs; therefore, Phase I begins this action and Phase II should complete and maintain this action.

4.1.2 Planning Criteria

Water supply, mitigation and restoration criteria remain consistent with the Refined Planning Criteria and are carried for to Final Plan Formulation.

4.1.3 Agency Resolution Process

The input from other study committees is carried forward from plan refinement but now the Agency Resolution Process has taken pre-eminence in project plan formulation.

The Conditional Acceptance by the resource agency directors included specific provisions that the AWS project must meet before final project acceptance is authorized. These provisions included the recommended fish passage alternative, 9A8. Further, these provisions have resulted in the changed project objectives and emphasis on adaptive management. The general understanding of ecosystems by most scientists and resource managers today is that there is a great deal of uncertainty regarding major perturbations to natural systems. This uncertainty was behind the need for Phased Implementation to study the existing system and the changes resulting from successive Phase storage changes.

This uncertainty is also reflected in the FPTC development of the recommended fish passage alternative, Alternative 9A8, New Tower with One Enlarged Screen in Single Lock and New Tunnel and Stilling Basin. This design is a unique application of several project features from lessons learned from past fish passage failures and successes and it includes some inviolate criteria the committee consider necessary for successful fish passage.

4.1.4 Water Supply and Restoration Criteria for Phased Storage

a. The Agency Resolution Process proposal stipulated the Phased Implementation of the AWS project. This stipulation added more specific criteria for evaluating water supply and restoration alternatives.

b. All project restoration alternatives (other than flow augmentation) are implemented immediately in Phase I. Mitigation alternatives are implemented prior to phased impact: Phase I alternatives are completed prior to Phase I and Phase II alternatives prior to Phase II.

c. To provide for successful fish passage, structural improvements and changes in reservoir operations are necessary.

d. On a daily basis, adaptive management to protect instream resources has higher priority during spring refill than additional storage. To avoid and minimize impacts to the resource base, refill rules were developed; this affects the timing and reliability of storage.

e. Existing storage has higher priority than additional water storage.

f. Refill operations were targeted to mimic natural hydrology patterns with specific refill rules developed including:

(1) minimum baseflows;

(2) maximum fill rates; and
(3) use of artificial freshets.

g. Minimum instream flow targets for additional storage flow augmentation are revised over state mandated minimums. Tacoma must meet these flows prior to additional storage or diversion of water. The Muckleshoot/Tacoma mitigation agreement developed these new, higher minimum flows (see Paragraph 1.6.2).

h. A daily flow model incorporating all baseline data from AWS project studies and utilizing refill rules was used to evaluate the Phased Implementation storage alternative for refill reliability and impact analysis.

4.2 DESCRIPTION OF FINAL ALTERNATIVES

4.2.1 Alternative 1 – No Action

The No Action Alternative represents the without-project condition and is the most likely condition expected to exist in the future in the absence of the proposed project, including any known changes in law or public policy. Following are the expected without-project conditions assumed to exist without the proposed Howard Hanson Dam Additional Water Storage project. This condition assumes neither water supply or restoration at this project are implemented.

a. Water Supply. The without-project condition assumes the following conditions:

(1) Implementation of Tacoma's second diversion water rights, which allow an additional 100 cfs of water to be diverted at the Tacoma diversion structure, and construction of Tacoma's Pipeline No. 5 (P5) will occur prior to project year one of 2003. P5 is a water transmission line that will run from Tacoma's water diversion structure located just downstream of HHD through several communities in south King County and on to Tacoma. Construction of this pipeline is not contingent on the AWS project and is scheduled to be completed by year 2000. This line will be used to transport water from the proposed project to Tacoma's service areas in need of additional water. However, due to the requirement by the state and in an agreement with the Muckleshoot Tribe for prescribed minimum flows in the river below Tacoma's diversion, without the project Tacoma would be precluded from drawing their total allocation of water from the river at many times during the summer and fall due to low flows.

(2) Additional new ground water wells will be drilled to augment the existing water supply. These wells will not be able to provide for Tacoma's total requirements and will be required under with project conditions also.

(3) Tacoma is pursuing implementation of a proposed artificial recharge project.

(4) Tacoma is pursuing the use of recycled water, using non-potable water from the sewage treatment plant in industrial applications

(5) Construction and completion of a water supply intertie between Tacoma and Seattle water systems with a peak capacity of 40 mgd, and

(6) Water conservation and non-structural measures have been instituted, to include:

- required use of low-flush toilets and low-flow showerheads in new and remodeled residential construction;

- conservation pricing – seasonal water rate increases for residential and wholesale customers.

The above measures will not provide adequate water to supply Tacoma's demands over the next 50 years.

b. Fish Passage. The outlet works at HHD were designed to pass water, for flood control and low flow augmentation, not fish. When HHD was constructed in the early 1960's there were no migrating fish runs in the upper river, the Tacoma Diversion Dam had provided a physical barrier separating the upper river from the lower river preventing upmigration of adult fish past the diversion. In the 1980's resource agencies and the MIT have planted steelhead, coho, and chinook in the upper river. Since there is no provisions for fish passage at the dam the water and outmigrating fish are passed from the reservoir through the two regulating outlets; the 48-inch bypass, elevation 1,069 feet and the 19-foot tunnel, elevation 1,035 feet, controlled by two 12-foot radial gates, to the river below. The survival rate for outmigrating fish is low approximately 5-25% and is expected to stay that way under the No Action alternative.

Adult wild steelhead returning to spawn are presently collected at the Tacoma Diversion Dam and transported to the reservoir. Collection and transport of wild adult salmon is expected to begin in 1998. The city of Tacoma in an agreement with the MIT will construct a fish ladder around the Diversion Dam and will trap adult returning fish above the Diversion Dam for transport to the reservoir. This is a Without Project/No Action condition and operation will be consistent and unchanged in the With and Without Project conditions.

c. Ecosystem Restoration. When attempting to migrate downstream, juvenile salmon and steelhead will continue to pass through the existing bypass system at the dam suffering high mortality in the process. Trapping of adult salmon and steelhead at the Tacoma Diversion dam with transport and release above the HHD will continue for all alternatives considered. Without project conditions assumes the proposed 1135 restoration project, which provides 5,000 ac-ft of storage for low flow augmentation, is in place. This additional storage would take place in drought years, approximately 1 in 5 years, but may

be increased to every year through adaptive management. Available habitat would remain as is.

(d) Water Quality. The current project dramatically alters water temperature in the river section immediately downstream of the dam. With the existing outflow ports, withdrawal of water occurs well below the thermocline during the temperature stratified period. The result is that early summer reservoir outflows are significantly colder than the unregulated river would be. Once the cold water below the thermocline is depleted, usually in the first half of August, the outflow temperature increases dramatically. The result is that late summer and early fall outflows are significantly warmer than the unregulated river would be.

The existing project adequately meets state water quality objectives for turbidity.

4.2.2 Alternative 2A – Additional Water Supply With fish passage for mitigation

a. Water Supply. An additional 22,400 ac-ft of water will be stored raising the water surface elevation to 1,169 feet. This would provide Tacoma's additional water needs for the next 40-50 years. Additional water rights would be required for this alternative.

b. Fish Passage Facilities. This would consist of modifications to the existing intake tower to add a surface level fish passage, similar to the Green Peter "gulper," as mitigation for the increased depth of the reservoir (fish passage Alternative 9A4). Since the existing tunnels would continue to be used for fish passage it is not expected that survival would be greatly increased over present conditions. Out-migrating fish would still be subject to injury and descaling due to high flow velocities and abrasion along the tunnel walls.

Adult returning wild fish would continue to be trapped at the Tacoma Diversion Dam and hauled for release in the reservoir as discussed in paragraph 4.2.1b. above. This would be true for all of the final alternatives considered.

c. Project Operations. The project would operate in a fashion similar to the present, however, 100 cfs (approximately 65 mgd) would be available from storage to supply Tacoma's Second Supply Water Rights (SSWR) demands during the summer and fall.

d. Mitigation Alternatives. The additional pool length coupled with the increased depth and the need for the fish to sound an additional 30 feet to exit the reservoir at full pool make modifications to the existing intake tower, a surface level collector, necessary to maintain fish runs at the current levels. Other mitigation involving construction of new habitat, to make up for that lost due to the greater height of the pool, would take place in and along the reservoir and tributary streams. This is a "single purpose" alternative to increase water supply. It does not address environmental restoration and therefore, was subsequently dropped from further consideration.

(e) Water Quality. Water temperature problems downstream of the dam that result from the existing low elevation outlets would be exacerbated with this alternative. Earlier refill of the reservoir each year, combined with greater depth and larger surface area would produce a more developed thermocline. Early summer release temperatures would be even colder than existing conditions; fall temperatures would be even warmer.

Earlier refill of the reservoir each year would not significantly impact the project's ability to meet state water quality objectives for turbidity.

4.2.3 Alternative 2B – Immediate Full Development of Water Supply and Environmental Restoration with Fish Passage

a. Water Supply. An additional 22,400 AF of M&I water and 9,600 AF of low flow augmentation would be stored in the spring for release during the summer and fall. Tacoma's SSWR of 100 cfs would be diverted at all times during the year, except when minimum flows could not be maintained. This means that SSWR water would be diverted for use even during the spring when water was being stored in the reservoir. Additional water rights would be needed for this alternative. The water surface elevation under this alternative would be 1,177 feet.

b. Fish Passage Facilities. The proposed fish collection facility (fish passage Alternative 9A8 sheets 29-35) is a new structure that is intended to pass migrating juvenile fish downstream through the Howard Hanson Dam (See Appendix A for more detail). It is not intended to pass migrating adult fish upstream through the dam. The adult fish would continue to be trapped below the dam and transported for release above the dam. The main features of the fish passage facility are:

- a new intake tower,
- a wet-well,
- a floating fish collector,
- a fish lock,
- a discharge conduit, and
- a fish transport pipeline.

c. Project Operations. Currently, the entire Green River flow must pass through the existing outlet works intake structure. Upon completion of the new facility, which will be located on the left bank near the existing outlet works, flows will pass through either the existing intake structure or the new fish passage facility. The new fish passage facility will be designed to pass the 50% exceedance flow.

Essentially, this facility will operate as a lock. The fish are collected into the fish lock by a floating fish collector located in the wet-well, just upstream of the fish lock. Under ideal conditions, all of the reservoir's flow will pass through the fish collector. The fish collector houses a modular-inclined screen that allows 95% of the flow to pass through it, while preventing the fish from passing through it. The remaining 5% of the flow "washes"

the fish across the modular-inclined screen into a flume that deposits the fish into the fish lock. When a sufficient number of fish are collected, the water level in the fish lock is lowered to a predetermined elevation, and the remaining quantity of water and fish are then discharged as a unit through the fish transport pipeline to the Green River just below the existing stilling basin.

d. Modified 1135 Project Operations. The storage of water for low flow augmentation (LFA) in drought years would be modified so that that water is stored every year instead of once every 5 years on average, insuring that additional water is available for LFA.

e. Mitigation Alternatives. The new fish passage facility would be both for water supply and low flow augmentation, to maintain the existing level of fish, and for restoration to increase the level of return to allow self-sustaining fish runs.

Habitat improvements would also be required to mitigate for the loss of existing habitat as the pool is raised. Four riparian projects were selected to mitigate for 120 acres of riparian habitat area inundated by the pool raise. These projects include maintenance of stream-corridor habitat within the inundation pool (13.3 acres) and management of riparian forests to accelerate succession on major streams above the project (108.3 acres) for a total of 121.6 acres. Project types include: leave of trees in the inundation pool rather than clearing (not counted as a listed project); planting of water-tolerant vegetation; reserve of riparian forests at 5 acres to 1 acre impacted; and intensified forest management – thinning and planting. The mitigation impact amount was dependent on defining the riparian area, the definition was provided from the Tacoma Forest Land Management Plan.

Nine tributary or stream projects were selected to mitigate for 17.4 acres of stream habitat area inundated by the pool raise. These projects include maintenance of in-stream habitat within the inundation pool (8.1 acres) and improvement of habitat in streams above the project (8.8 acres) for a total of 16.9 acres. These projects do not equal the total 17.4 acre mitigation requirement, but additional compensation can be found through leaving trees in the inundation zone or under the two habitat restoration projects above and below the project. Stream habitat mitigation project types include: placement of large structures (boulders or logs) to increase habitat complexity; replacement of culverts reconnecting tributary habitat; creation of side-channel or pond habitat through excavation. (See Table H-3. Summary of Selected Fish Mitigation and Restoration Habitat Projects in Section 3 of this document.)

f. Environmental Restoration Alternatives

(1) Fish Passage. The main environmental restoration feature of the project is the proposed fish passage. When environmental restoration was added as a project objective the choice of a fish passage changed from one that provided mitigation only to one that provided mitigation and restoration. It is expected that the proposed fish passage will allow a 95% survival rate of juveniles migrating through it. This is the survival rate

considered necessary to accomplish the goal of a self-sustaining fish run. Habitat restoration alternatives upstream of HHD are dependent on providing adequate fish passage downstream through the dam.

(2) Low Flow Augmentation. This alternative provides 9,600 ac-ft of additional storage water for low flow augmentation. In addition, a change in the operation of the 1135 project will occur in which 5,000 ac-ft of low-flow storage will be provided every year instead of once every 5 years. The low flow targets at Auburn vary from 900 cfs to 250 cfs depending on calendar dates and seasonal weather conditions of wet, average, and dry. Details were described earlier in this report under "Alternative 7B – Mimic Natural Hydrology During Refill and Provide Low Flow Augmentation".

(3) Habitat Alternatives. The disruption of sediment transport from the Headwaters watershed due to the interception of almost all course sediment (including gravel) by the original construction of HHD may be causing fundamental changes in the mainstem channel and associated habitats of the Upper to Lower Green River. Gravel nourishment could be used to replenish areas presently deficient of salmon and steelhead spawning-sized sediments and slow or stop the downstream extent of streambed armoring. To implement this measure, monitoring or sediment transport modeling will be required to evaluate the long-term impacts of this restoration measure. It is expected that 3,900 square yards of gravel nourishment should maintain 400,00 square foot of spawning habitat in the Middle Green River

In addition to gravel nourishment, two habitat restoration projects were selected to address original impacts of dam construction and pool inundation that impacted over 8 miles of stream and side-channel habitat. One project is a side-channel reconnection in the Upper Green River (below HHD) that will restore up to 3.2 acres of off-channel habitat and the other is 3.5 miles of river and stream habitat improvement in tributaries above the inundation pool (from 1,177 to 1,240 feet elevation). These projects will interact with the fish passage restoration facility and should help accelerate re-establishment of Headwaters and Upper Green River salmon and steelhead populations.

g. Water Quality. Improved water temperature in the river downstream of the dam would be a benefit of this alternative. Water temperatures problems associated with the existing project would be eliminated or significantly reduced in nearly all years. Early summer release temperatures would follow the natural river temperatures. In the fall, blending of water from above and below the thermocline would allow the project to meet state water quality standards in most years.

Earlier refill of the reservoir each year would not negatively impact the project's ability to meet state water quality objectives for turbidity.

4.2.4 Alternative 2C – Phased Development of Water Supply with Fish Passage and Environmental Restoration

a. Phase I Development

(1) Water Supply. An additional 20,000 AF of M&I water would be stored in the spring for release during the summer and fall to supply 100 cfs of Tacoma's SSWR water. The water surface elevation under this alternative would be 1,167 feet.

(2) Fish Passage Facilities. The fish passage facility would be the same as in Alternative 2B above. See sheets 29 - 35.

(3) Project Operations. Under this plan the SSWR water that Tacoma would be allowed to divert during the winter and spring would be stored in the reservoir for release in the summer/fall when the need for the water is greater and the river flows are lower. Modification of the 1135 project operation would be in place in Phase I, the additional 5,000 ac-ft of LFA water would be stored every year. Adaptive management will be used to minimize the impacts of the AWS project. Through adaptive management the operation of the HHD can be modified to provide protection and/or compensation to prevent steelhead redd and egg desiccation by 1) reducing freshet volume, and 2) increasing instream flows at the end of the spring refill period during June.

(4) Mitigation Alternatives. Under this Alternative the riparian habitat mitigation would remain the same as in Alternative 2B, but would be phased with 79.2 acres being improved in Phase I. The stream habitat mitigation would remain as in Alternative 2B, but would also be phased with 11.2 acres of improvements in Phase I.

(5) Environmental Restoration Alternatives.

(a) Low Flow Augmentation. This alternative contains no additional low flow augmentation in Phase I. "Without project" conditions will continue for instream flow. The existing storage will insure a flow of 110 cfs at Palmer. The "1135 Project" would provide 5,000 ac-ft of storage for low flow augmentation every year. An attempt will be made to follow baseflow levels and release artificial freshets as identified in the adaptive management flow modeling exercise; however, the reliability of attaining the target operations would not be very successful without additional storage.

(b) Habitat Alternatives. Habitat restoration alternatives will be the same as in Alternative 2B. All habitat restoration alternatives will be implemented in Phase I.

(6) Water Quality. This alternative would have water quality benefits similar to those of Alternative 2B.

b. Phase II Development. Phase I is expected to last approximately 5-8 years. During that time the effects of Phase I of the AWS project on the environment and on the fish

runs will be monitored and adaptive management alternatives will be used to minimize the impacts of the project.

(1) Water Supply. An additional 2,400 AF of M&I water would be stored along with 9,600 AF of storage for LFA. The water surface elevation in Phase II would be 1,177 feet. Phase II water supply is the same as Alternative 2B.

(2) Fish Passage Facility. The fish passage facility will be completed in Phase I.

(3) Project Operations. Phase II operation is the same as Alternative 2B.

(4) Modified 1135 Project Operations. The storage of water for low flow augmentation (LFA) would continue to be stored every year insuring that same amount of water is available for LFA as in Alternative 2B.

(5) Additional Mitigation Alternatives. Phase II includes an additional 42.4 acres of riparian mitigation and 5.7 additional acres of stream habitat mitigation. Once Phase II was completed it would be the same as Alternative 2B.

(6) Additional Restoration Alternatives. In Phase II, 9,600 ac-ft of additional water will be stored for low flow augmentation. This is in addition to the 5,000 ac-ft of LFA water being stored every year under the 1135 project. Operation of this storage (14,600 ac-ft) will be the same as described in Alternative 2B.

(7) Water Quality. This alternative would have water quality benefits similar to those of Alternative 2B.

4.3 COMPARATIVE EVALUATION OF FINAL ALTERNATIVES

4.3.1 General

In formulating a plan to meet the final planning objectives, a number of planning criteria were considered. These criteria were used to screen and evaluate alternative plans and to measure each plans contribution to the national economic development (NED), environmental quality (EQ), and regional development (RD) and other social effects (OSE) accounts from the Water Resource Council's "Economic and Environmental Principles and Guidelines for Water and Related Land Resources Implementation Studies" of March, 1993. Not all of the criteria are compatible and no plan could fully satisfy all of them. However, Alternative 2C – Phased Development of Water Supply with Fish Passage and Environmental Restoration comes closest to satisfying all of them. Applicable planning criteria for the study is presented in the following paragraphs under the account to which they are primarily related.

4.3.2 National Economic Development

For this multiple-purpose project the NED criteria was used to help formulate plans which meet the NED objective of developing maximum net benefits to the nation. This particular project is unique given it is a dual purpose project where one project purpose places a value on the benefits in dollars (water supply) while the other project purpose benefit is quantified in non-dollar values (ecosystem restoration). As a result, the typical maximization of net benefits (benefits minus costs) is not possible and other criteria must be used. For this project, one of the economic criteria used to evaluate alternative projects was to implement the least cost measure that would achieve the goal of each project purpose. The goal of water supply was to implement the least cost way of meeting future water demands over the 50-year life of the project. Water supply benefits must also exceed the separable water supply costs. For ecosystem restoration, the goal was to achieve the least cost way of producing self-sustaining runs of salmon and steelhead. Self-sustaining runs are those which do not have to be supplemented with hatchery fish. Other NED criteria are listed below.

- The period of analysis for this study includes a 50-year period from 2003 to 2053.
- Project Costs and dollar quantified benefits are in October 1997 prices. Project interest rate is 7 and 1/8 percent.
- Water supply and habitat measures cannot adversely impact existing project purposes for flood control and water conservation storage for minimum instream flows. Existing storage has higher priority than additional water storage.
- Water supply and Restoration measures must be in the Sponsors best interest.
- Value of water supply benefits is based on the least-cost water supply alternatives to HHD.
- Output of water supply measures is measured at 95% reliability and provides the same water quality as HHD.
- The water supply source must be available, not just speculative.
- Water supply measures must meet the average summer and/or 4-day peak demands,
- Fish passage measures must meet design criteria provided by an independent technical committee.
- Restoration measures must be consistent with the Ecosystem Restoration Guidance.
- Restoration measures must be consistent with AWS project objectives of 1) providing an acceptable level of water supply; 2) restoring anadromous fish above HHD; and 3) restoring selected ecosystem processes or functions.
- Restoration strategies and measures must be consistent with existing fish and wildlife management.
- The project is managed adaptively, but for planning purposes Phase I is assumed to last five to eight years. This should be considered a reasonable period of time for meeting project performance objectives for Phase I and to determine through monitoring and evaluation if Phase II can be implemented.
- All operational and structural means available were used to avoid or minimize impacts of storing additional water for M&I and flow augmentation.
- Mitigation needs addressed prior to development of restoration projects.

- Least-cost alternatives that fulfill identified mitigation requirements were selected first.
- Cost effective incremental cost analysis was used to help refine and select between mitigation and restoration alternatives.

4.3.3 Environmental Quality Criteria

The Environmental Quality (EQ) criteria are used to evaluate the effects of alternative plans on the EQ account, which displays non-monetary effects on significant natural and cultural resources. The EQ criteria include those imposed by federal, state, local and tribal regulations, and those uniquely related to the HHD AWS project area and the Green River. The significant environmental resources of this area are described in the AWS project EIS and Appendix F. The pertinent EQ criteria are as follows:

- Protect and restore critical ecosystem functions, processes and/or target fish and wildlife habitats in the study area.
- Restore self-sustaining runs of salmon and steelhead to the Upper Green River
- Protect, and where possible, assist in the recovery of any threatened or endangered species in the study and their critical habitat.
- Protect and restore water quality in the study area.
- Preserve or salvage significant historic and prehistoric cultural resource sites affected by potential project construction or effects in accordance with the Historic Preservation Act of 1966; the Reservoir Salvage Act of 1960, as amended by Public Law 93-291; EO 11593; and the Archaeological Resources Protection Act of 1977.
- Protect, and where possible, enhance recreational values within the study area.
- Water supply measures must avoid any overriding environmental problems.
- The water supply measure must not adversely affect water quality conditions: turbidity, dissolved oxygen, temperature, and saltwater intrusion.
- Wells must not be in hydraulic continuity with existing surface water.
- Water supply measures must not adversely affect minimum in-stream flows.
- Restoration measures must address overriding environmental problems, in particular, identified and accepted aquatic habitat limiting factors.
- The restoration project area is limited.
- To provide for successful fish passage, structural improvements <u>and</u> changes in reservoir operations are necessary.
- On a daily basis, adaptive management to protect instream resources has higher priority during spring refill than additional storage.
- Refill operations were targeted to mimic natural hydrology patterns with specific refill rules developed including: 1) minimum baseflows; 2) maximum fill rates; and 3) use of artificial freshets.
- Minimum instream flow targets for additional storage flow augmentation are revised, and higher, than state mandated minimums.

- Habitat mitigation projects are evaluated by impact areas: 1) side-channel disconnection; 2) riparian and tributary habitat inundation; and 3) terrestrial habitat inundation (wildlife).
- Mitigation and restoration projects must be ecosystem function or process driven.
- Mitigation and restoration project sites were developed and selected based on ecosystem or biological need first.
- Restoration projects or sites considered addressed specific aquatic habitat limiting factors identified through AWS scoping.
- If no fish passage alternative can provide 95% project survival, the recommended fish passage alternative must provide project passage survival rates and estimated adult returns that meet or come near the restoration objective of self-sustaining runs.
- In addition to meeting design criteria, fish passage alternatives are to be assessed based on lessons learned from past project failures and successes in fish passage development.
- The recommended fish passage alternative must meet approval of FPTC and Resource Agency Directors.
- Fish passage alternatives recognize that the Green River is a heavily urbanized watershed and therefore higher project survival rates and escapements are necessary to reach self-sufficiency.
- Dam fish passage alternatives must include a surface withdrawal ability to provide for water quality improvements by blending of warmer surface and cooler lower reservoir water.
- An ability to screen the 50% exceedance flow (late April thru May) through a surface inlet is the most critical design feature for providing successful attraction and entrainment of smolts into any fish passage facility.

4.3.4 Regional Development.

- The water supply and restoration measures must be consistent with regulatory authorities and be politically acceptable to resource agencies, tribes, and sponsor.

4.3.5 Impacts to and/or Affects on Existing Project Operation

a. Flood Control. All alternatives have had the same flood control space and operational requirement. This includes the conditions within the Phase I and Phase II implementations. Flood control procedures may include a warning to water and land resource managers during flood events when certain features constructed around the reservoir area are likely to be inundated. However, the presence of these features (or lack of) did not influence the selection of the preferred alternative. Both Phase I and Phase II include refill operations that start as early as mid-February. Flood control operations have a higher priority function than refill operations, so the refill would be interrupted and evacuated when a flood forecast is immanent. After a flood event, river flows are still high and biological functions are usually interrupted (unintentionally), so an accelerated refill schedule could likely be imposed to regain the space that was earlier evacuated. A similar

situation could occur in the fall season. The flood control zone could have about a quarter of its space occupied by the conservation storage. The immanent occurrence of fall rains is predictable by meteorological and satellite photo observations. The weather transition marks the end of the low-flow season. There still would be space in the river channel to plan the evacuation of surplus conservation storage. Water and biological resource managers would coordinate the magnitude and duration of reservoir releases into the Green River. The requirement to refill the conservation space for the potential continuation of low flows after the first rain is a possibility that would be considered during real-time observations of the transition season.

b. Right Abutment Seepage. The rock on the right abutment is hydrothermally altered and weaker than most of the rock forming the left abutment. The complex geologic conditions in the right abutment create a complicated reservoir seepage problem which is not totally understood from the standpoint of hydrogeology.

Seepage through the right abutment of the dam and its effect on the stability of the downstream right bank slope of the dam have been a basis for continued exploration and studies since the dam became operational in December 1961. The most recent document addressing these issues was a report titled "Post Flood Report, Howard A. Hanson Dam", dated 8 April 1997.

In February 1965, when the pool briefly reached elevation 1,161.8 feet, a spring appeared 460 feet downstream of the dam axis on the right abutment at elevation 1,134 feet. The spring area was blanketed with gravel fill and a crib wall was constructed to support the gravel. In 1968, a 640-foot-long concrete lined drainage tunnel (adit) was constructed into the right abutment at elevation 1,100 feet to improve seepage control. The tunnel is located 200 feet downstream of the dam axis.

Since the initial filling of the reservoir there have been four major flood pools that exceeded elevation 1,160 feet. The first flood occurred on 5 December 1975 with a peak of 1,175.8 feet. The second flood peaked at 1,173.6 feet on 4 December 1977. The third flood peaked at 1,167.2 feet on 1 December 1995. The fourth and maximum to date occurred on 10 February 1996 with a peak of 1,183.2 feet. During each of these events significant seepage has been recorded.

From studies performed to date, it is apparent that some form of corrective actions must be incorporated into the design of the Additional Water Storage project to mitigate the effects of the higher pool. Several alternatives have been developed and analyzed to address reduction of seepage through the right abutment. See Appendix E, Geotechnical Considerations.

The preferred plan proposes that consolidation (injection) grouting be done locally to reduce the seepage through the right abutment. This would consist of a series of borings (assumed to be on 3-foot centers and two rows at this time) drilled approximately 10 feet into bedrock for a total length of drilling of about 25,500 feet to facilitate placement of

grout. Grouting, estimated at about 7,420 cubic yards, would be performed under very low pressures to reduce the chance of hydrofracturing the abutment materials.

During the Feasibility Study, consideration was given to raising the pool to 1,177 feet for an extended period of time to allow the Corps to better determine the effects of the higher pool, but this was unacceptable to the regulatory agencies. Therefore, the test pool must be accomplished during construction for two reasons: first, the test pool will be preceded by grouting the area between the drainage tunnel and the embankment; and second, the reservoir may need to be cleared. The test pool is needed in order to monitor groundwater conditions in the right abutment and to design and construct an appropriate modification to the seepage control measures currently in existence, if necessary. Requirements for a test pool are as follows:

1) It is known that precipitation affects the groundwater regime of the upper aquifer; therefore, the test pool will be conducted under conditions of a normal summer conservation pool.

2) The test pool will be conducted in a staged manner; i.e. the pool will be raised in approximately 10-foot increments, allowing time for instruments to stabilize before the initiation step. It is estimated that the test pool will take about 3 months to accomplish.

3) A complete analysis of the data will follow the completion of the test pool, which is expected to take approximately two months to complete. The design of any new seepage control feature or modification to the existing seepage control features will commence after completion of the analysis.

Additional right bank seepage corrective actions may be necessary once the test pool has been conducted. Cost of these measures may ultimately limit the final pool raise elevation to something less than 1,177 feet.

c. Turbidity and Temperature Control

(1) Temperature. Any additional water supply alternative without fish passage will result in outflow temperatures exceeding desired target temperatures and state mandated temperature requirements (60.8^{0}F maximum) in most years. The existing project with a single low elevation outlet results in colder than natural releases in the early summer and warmer than natural releases during mid summer through early fall. Without the fish passage facility, additional water supply would exacerbate this situation Additional water supply with the recommended fish passage alternative can result in a blending of outflow from warmer surface waters with the cooler deeper outlets.

By maximizing surface withdrawal through the fish passage facility during the spring and early summer cool water storage is maximized for use in the later summer and fall. The fish passage facility surface outflow tends to track natural inflow temperature until the reservoir stores a significant amount of heat. Blending of surface and deeper water would

occur sometime in July. After this time, meeting temperature requirements could restrict the use of the fish passage facility, or conversely, meeting fish passage criteria could result in possible violation of state temperature requirements. To address these constraints daily monitoring of outflow temperatures and fish passage would be required as would close coordination with resource agency biologists.

(2) Turbidity. Any of the final project alternatives would require beginning spring refill 5-6 weeks earlier than current operation of the reservoir, increasing the likelihood of storing water from high turbidity events. Historic records show that March inflow turbidity is no higher than April inflow turbidity and that suspended sediments tend to settle from the water column within a few days. Under any AWS alternative, high turbidity flows stored in the reservoir would be more frequent, however, the effect on outflow turbidity would be minor and short-lived, no different than under current operation. An enlarged reservoir would cause small and localized bank instability during initial inundation of the conservation pool resulting in insignificant effects on turbidity (Eckerlin, October 1995). The reservoir has recently filled for flood control to the elevation of the proposed conservation pool with only temporary impacts to outflow turbidity.

Selective removal of trees is expected prior to inundation with the first additional storage conservation pool. Although the final amount of tree removal has not been identified, removal may decrease bank stability and will be one criteria in assessing the final clearing plan.

4.3.6 Operation & Maintenance

The selected alternative will shift the focus of the operation of the project from the existing intake to the new fish passage facility. Except during floods and maintenance closures, the new facility will be used to control the flow. Because stoplogs must be installed or removed to match the pool elevation, significantly more labor is involved in raising or lowering the pool, particularly during the spring impoundment, when the pool rises rapidly for 3½ months. Also, whenever the main gates are used in conjunction with the fish passage gate, project personnel will adjust the gates in time consuming incremental adjustments to maintain the correct combined flow. The new facility will contain more equipment for the project personnel to maintain in addition to the equipment in the existing intake structure.

In addition to the fish passage facility, there are a number of habitat sites in the basin which will require O&M efforts. Particularly, the floating habitats will require adjustments to the anchoring systems as the pool raises, and some other sites will require maintenance to the plantings. The floating habitat sites will also require repairs during the months; they are on the ground, and logs will be replaced occasionally.

4.3.7 Funding and Budget -

It is expected that the pre-construction engineering and design (PED) phase of this project will begin in approximately the last quarter of calendar year 1998 and will take approximately 3½ years. Construction will take approximately 3½ years with completion of Phase I construction in 2004. Construction phase will begin in 2001 and will overlap the PED phase of the project. This will allow construction of the mitigation features, except for the new tower and fish passage, and a test pool raise while design of the tower and fish passage is completed.

The cost of PED is estimated to be approximately $8.3, in 1997 dollars. The federal share of the PED costs is 75% with the non-federal sponsor contributing the other 25%.

The cost of construction is estimated to be approximately $66.4, in 1997 dollars, including required monitoring. The federal share of the construction cost is 65% of the cost attributable to ecosystem restoration. The non-federal share of construction is 100% of the costs attributable to M&I water supply and 35% of the costs associated with ecosystem restoration.

4.4 DESIGNATION OF ALTERNATIVE PLANS

4.4.1 National Economic Development.

Based on the NED criteria presented in Paragraph 4.3.2 (National Economic Development), the NED plan is primarily based on implementing the most cost efficient plan that would achieve the goal of each project purpose. The NED plan is Alternative 2C described in Paragraph 4.2.4. This plan will provide 22,400 acre feet of storage or 48 mgd over the 153-day summer/fall demand period at 95% reliability and will also provide 9,600 acre feet of storage for low flow augmentation during the summer or an additional 39 cfs at 78% reliability over a 123-day summer/fall period. In addition, the NED plan will provide a fish passage facility determined to be the least cost alternative of meeting the restoration goal of establishing self-sustaining wild runs of chinook, coho and steelhead in the upper watershed above HHD.

4.4.2 Least Environmentally Damaging

Alternative 9F is the least environmentally damaging of the alternatives considered. To provide near natural riverine conditions and total restoration of fish passage (both downstream and upstream), removal of HHD would be required. Either the dam would be removed or a portion breached to recreate the existing Green River channel for unimpeded passage. This alternative was eliminated, as it does not meet AWS project objectives and would violate existing project purposes for flood control and water conservation (meeting minimum instream flows).

4.4.3 Preferred (Tentatively Recommended) Plan

The recommended plan is Alternative 2C – Phased Development of Water Supply with Fish Passage and Environmental Restoration, described in Paragraph 4.2.4. This plan is also the NED plan and meets the NED planning objectives to: (1) provide cost effective and sufficient M&I water supply to meet the water needs of the project sponsor over the life of the project; (2) provide ecosystem restoration, with a goal to establish healthy, naturally reproducing, self-sustaining runs of chinook and coho salmon and steelhead trout in the Upper Green River watershed above HHD; and (3) provide limited habitat restoration for selected ecosystem functions, processes or structures in the Green River Basin.

SECTION 5. LITERATURE CITED

Bilby, R.E., B.K. Fransen, and P.A. Bisson. 1996. Incorporation of nitrogen and carbon from spawning coho salmon into the trophic system of small streams: Evidence from stable isotopes. Canadian Journal of Fisheries and Aquatic Sciences 53(1): 164-173.

Bilby, R.E., B.K. Fransen, P.A. Bisson, and J. Walter. 1997. Spawning salmon and the productivity of freshwater ecosystems: establishing goals to maintain ecological integrity. Abstract presented at the 1997 Annual Meeting of the North Pacific International Chapter of the American Fisheries Society. March 1997, Everett, Washington.

Caldwell, B., and S. Hirschey. 1989. Green River fish habitat analysis using the Instream Flow Incremental Methodology. Washington Department of Ecology, Olympia.

Cedarholm, C.J., D.B. Houston, D.L. Cole, and W.J. Scarlett. 1989. Fate of coho salmon (*Oncorhynchus kisutch*) carcasses in spawning streams. Canadian Journal of Fisheries and Aquatic Sciences 46:1347-1355.

Dilley, S. and R. Wunderlich. 1993. Juvenile anadromous fish passage at Howard Hanson Dam and Reservoir, Green River, Washington, 1992. U.S. Fish and Wildlife Service, Western Washington Fishery Resource Office, Olympia.

Dunn, C.A. 1978. Evaluation of downstream fish passage through multi-level outlet pipes at Wynoochee Dam. Washington State Department of Fisheries, Progress Report No. 45, Olympia.

Fuerstenberg, R.R., K. Nelson, and R. Blomquist. 1996, Ecological conditions and limitations to salmonid diversity in the Green River, Washington, U.S.A: Structure, function, and process in river ecology. King County Surface Water Management.

Grette, G.B. and E.O. Salo. The status of anadromous fishes of the Green/Duwamish River system. Final report submitted to Seattle District, U.S. Army Corps of Engineers.

Laufle, J.C. and R.A. Cassidy. 1988. Retention of standing timber for fish and wildlife habitat in reservoirs. Lake and Reservoir Management 4(2):271-279.

Natural Research Council. 1996. Upstream: salmon and society in the Pacific Northwest. Committee on Protection and Management of Pacific Northwest Anadromous Salmonids, Board on Environmental Studies and Toxicology, Commission on Life Sciences. National Academy Press, Washington.

Summit Technology. 1995. Juvenile salmonid collection study report for Green Peter Reservoir South Santiam River, Oregon. Prepared for Portland District, U.S. Army Corps of Engineers, 90% Submittal.

U.S. Army Corps of Engineers. 1997. Green/Duwamish River Basin General Investigation Ecosystem Restoration Study Reconnaissance Phase. U.S. Army Corps Seattle District Reconnaissance Phase Project Report. Seattle, Washington.

Washington Department of Fish and Wildlife. 1997. State of Washington wild salmonid policy. Draft Environmental Impact Statement. Washington Department of Fish and Wildlife, Olympia.

Washington Department of Fisheries, Washington Department of Wildlife, and Western Washington Treaty Tribes. 1993. 1992 Washington State salmon and steelhead stock inventory, Olympia. Cited at SASSI 1993.

Wilson, M.F., and C. Halupka. 1995. Anadromous fish as a keystone species in vertebrate communities. Conservation Biology 9:489-497.

FIGURES

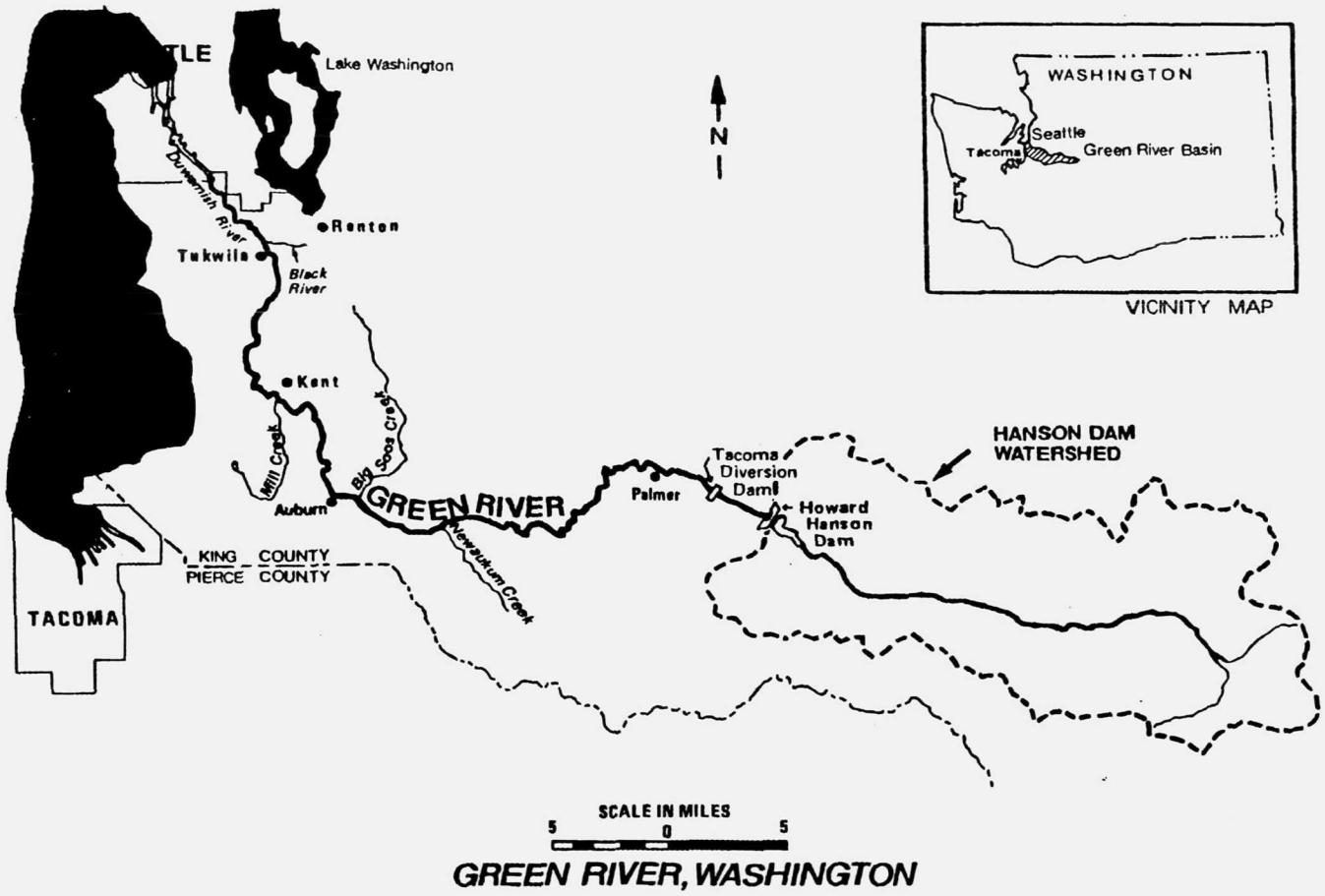

FIGURE 1-1.
VICINITY AND LOCATION MAP

FIGURE 1-2. HOWARD HANSON DAM WITHIN THE GREEN RIVER WATERSHED

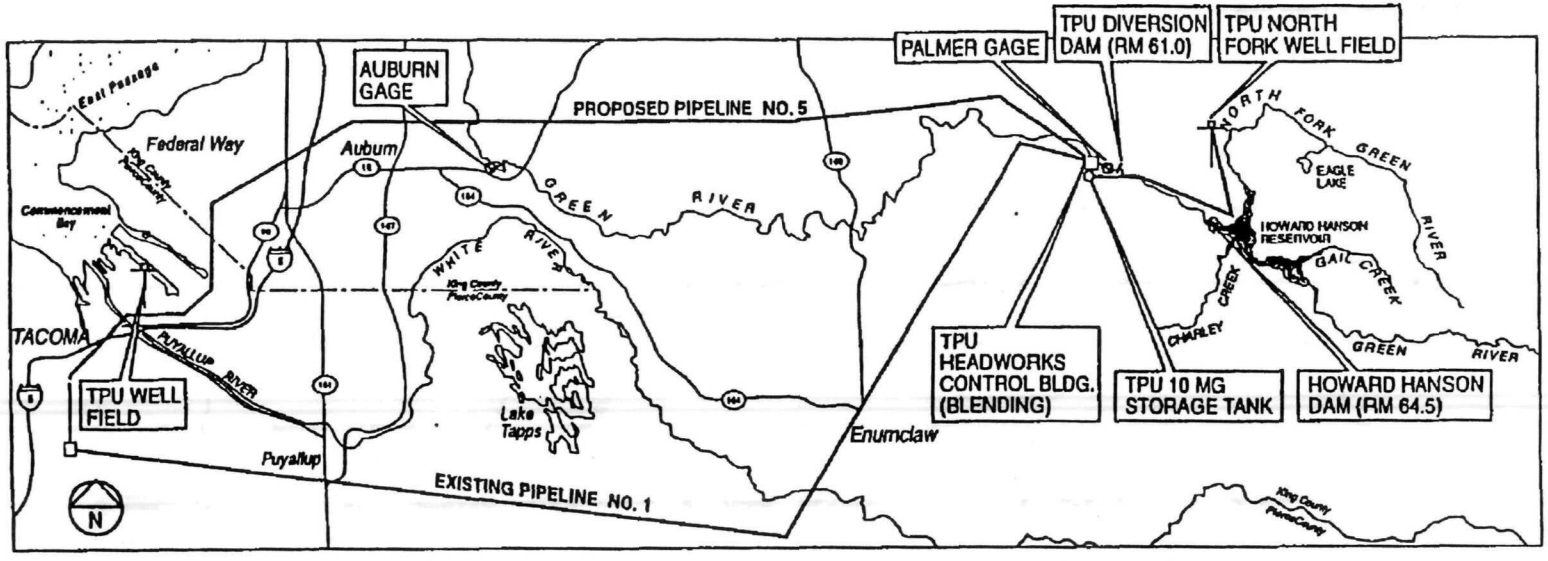

Green/Duwamish River Basin

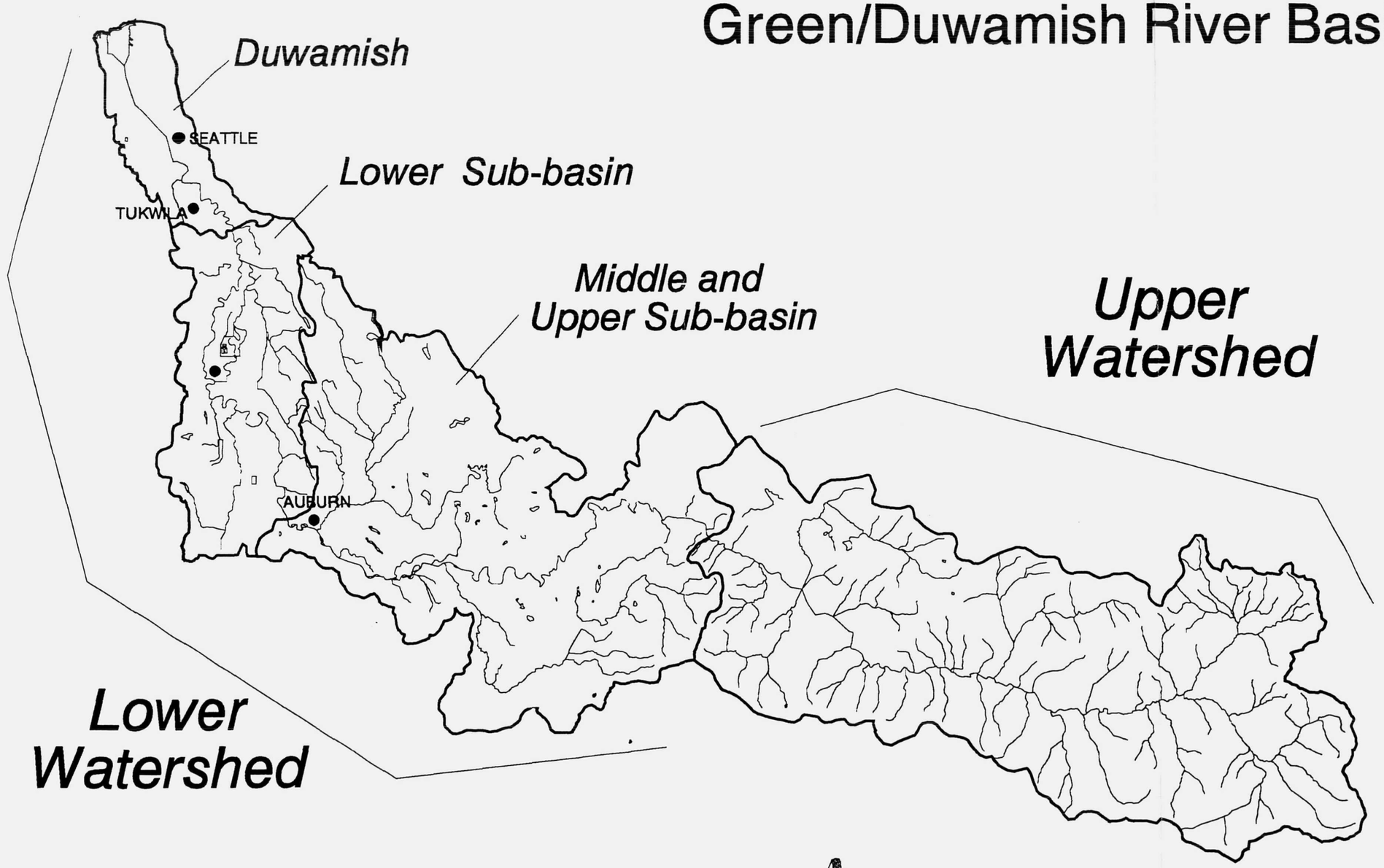

River information obtained from Washington State Dept. of Natural Resources

Figure 1-3
Green/Duwamish River Basin

Corps of Engineers
Date: 04/02/98
Preparer: DFF

It is understood that, while the Corps of Engineers and information suppliers have no indication or reason to believe that there are inaccuracies in information incorporated in the basemap, THE CORPS AND ITS SUPPLIERS MAKE NO REPRESENTATION OF ANY KIND, INCLUDING BUT NOT LIMITED TO WARRANTIES OF MERCHANTABILITY OR FITNESS FOR A PARTICULAR USE, NOR ARE ANY SUCH WARRANTIES TO BE IMPLIED WITH RESPECT TO THE INFORMATION, DATA, OR SERVICE FURNISHED HEREIN.

FIGURE 1-4. SITE MAP

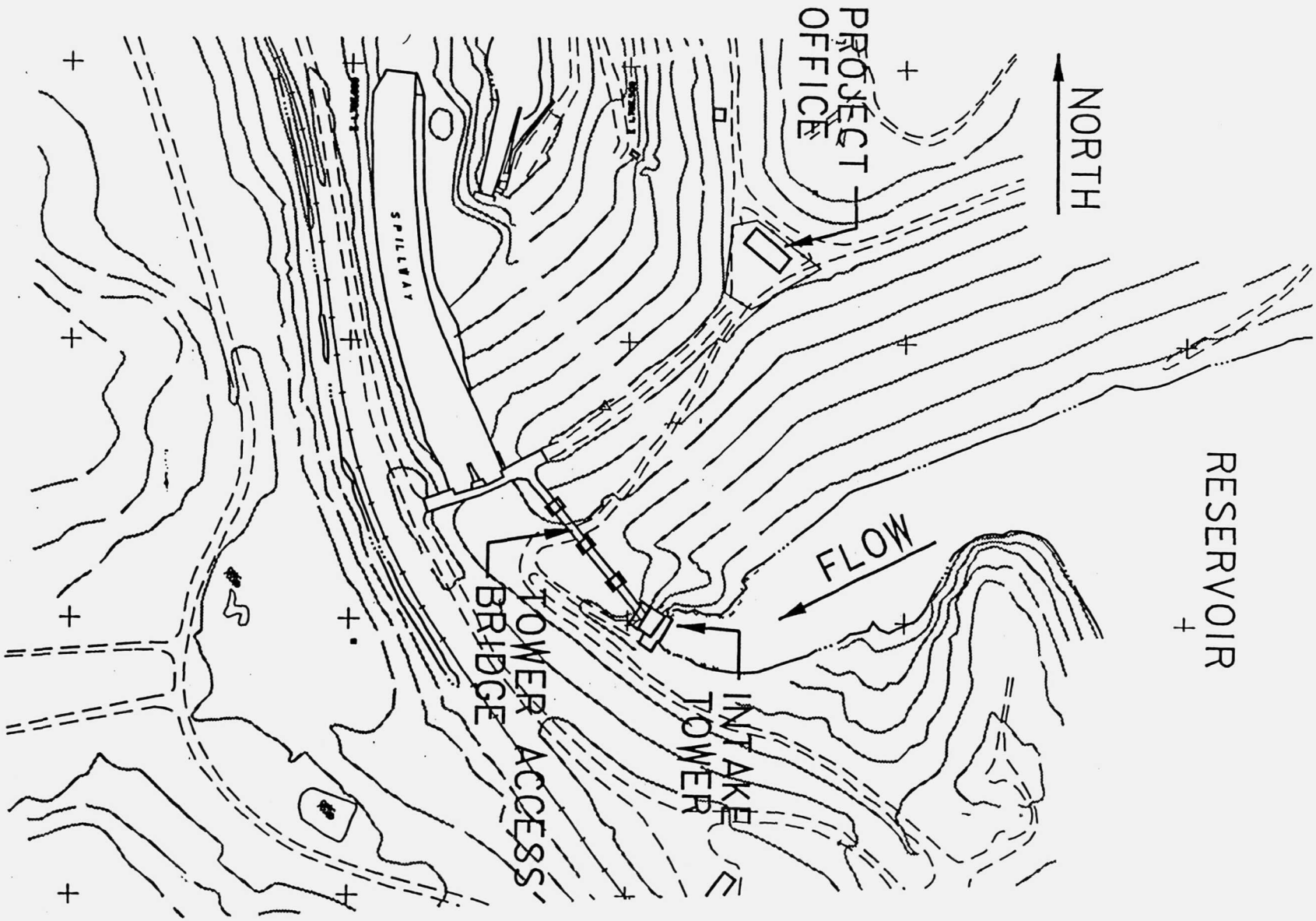

FIGURE 1-5. HOWARD HANSON DAM, CROSS-SECTION AND ELEVATION

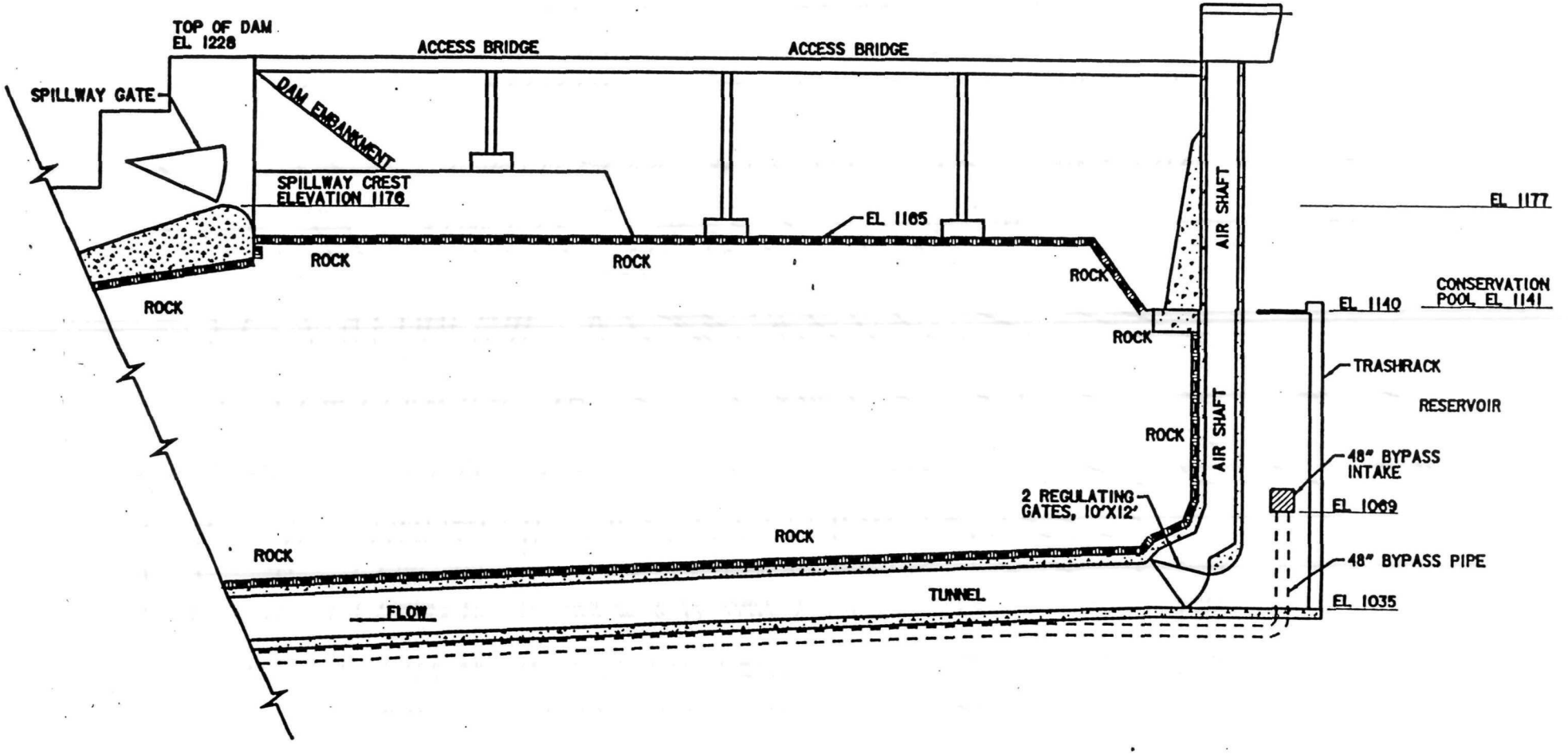

FIGURE 4-1. MIS CHAMBER AND FISH LOCK

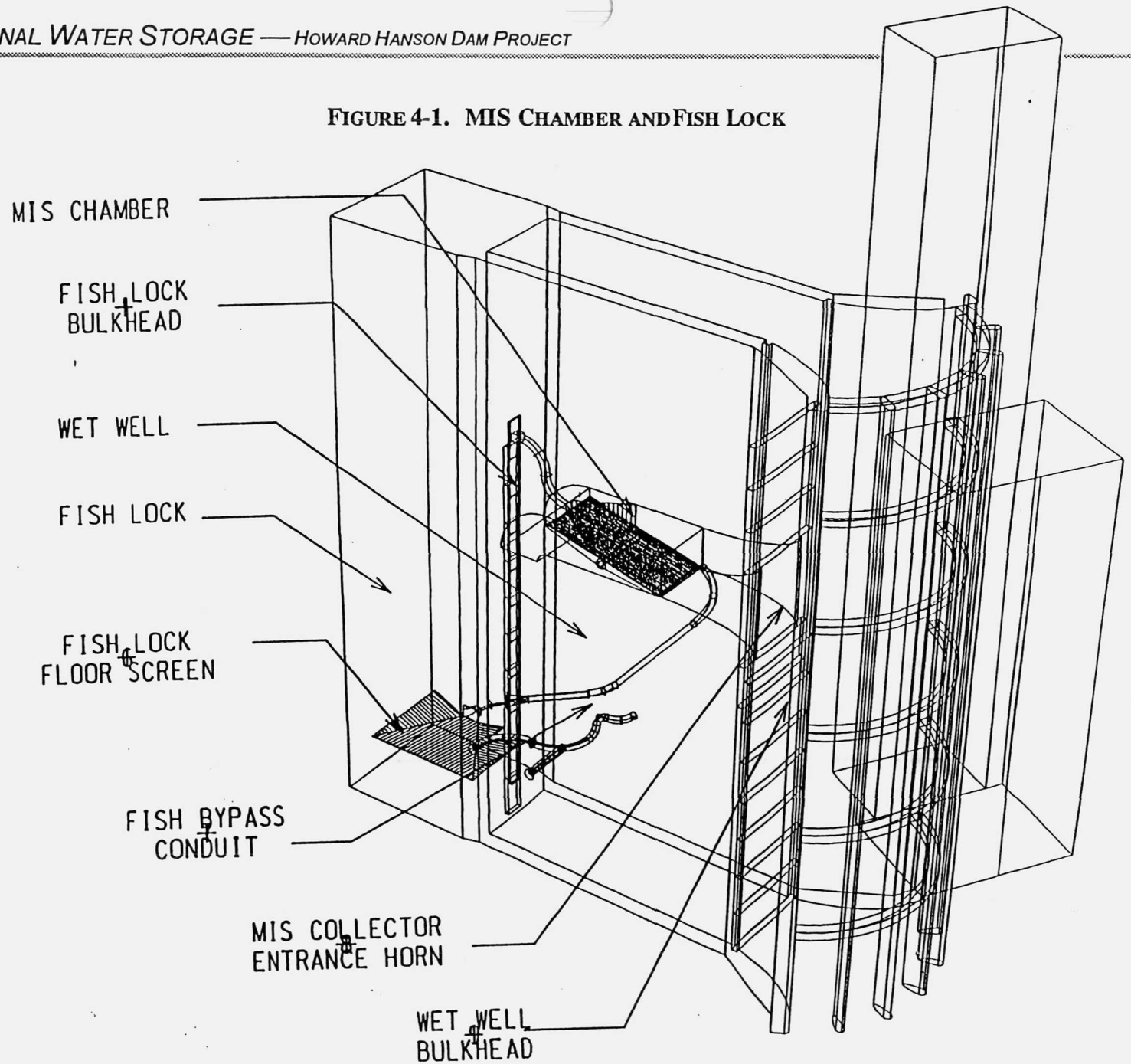

FIGURE 4-2. MIS CHAMBER AND LOCK, SECTION A

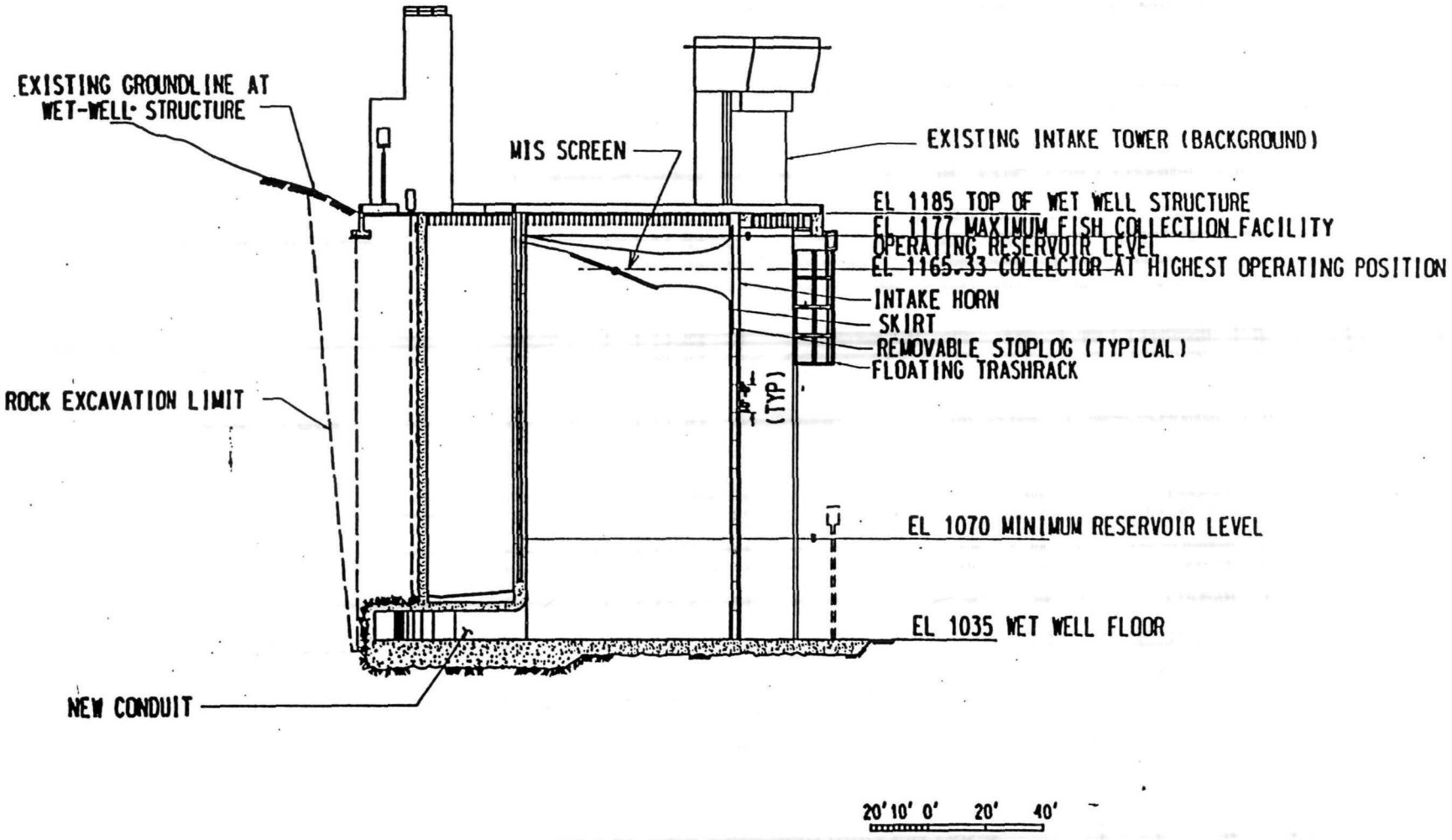

FIGURE 4-3. MIS CHAMBER AND LOCK, SECTION C

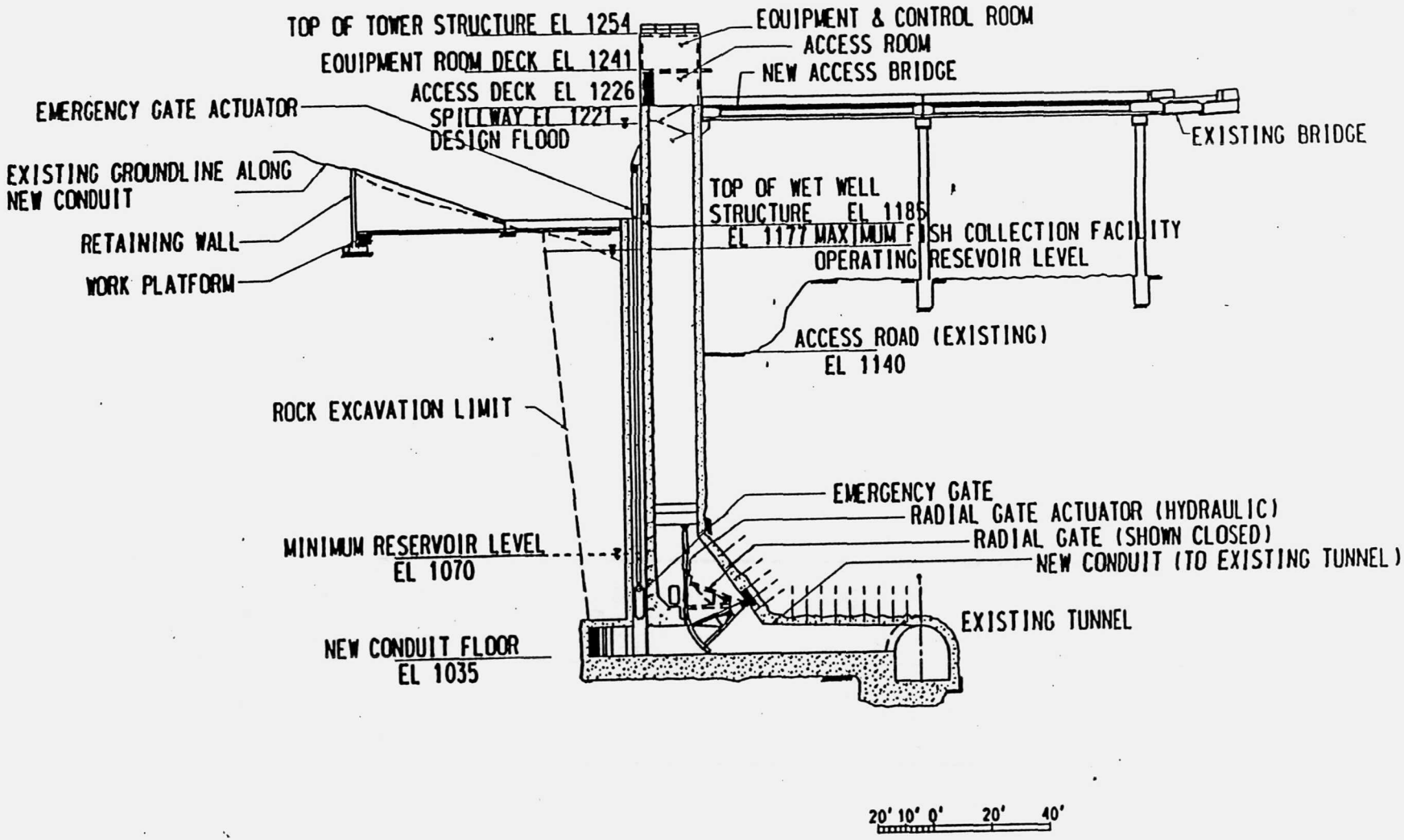

FIGURE 4-4. FISH PASSAGE FACILITY SUPERIMPOSED ON HOWARD HANSON DAM PHOTO (VIEW OF UPSTREAM FACE FROM RIGHT RESERVOIR RIM)

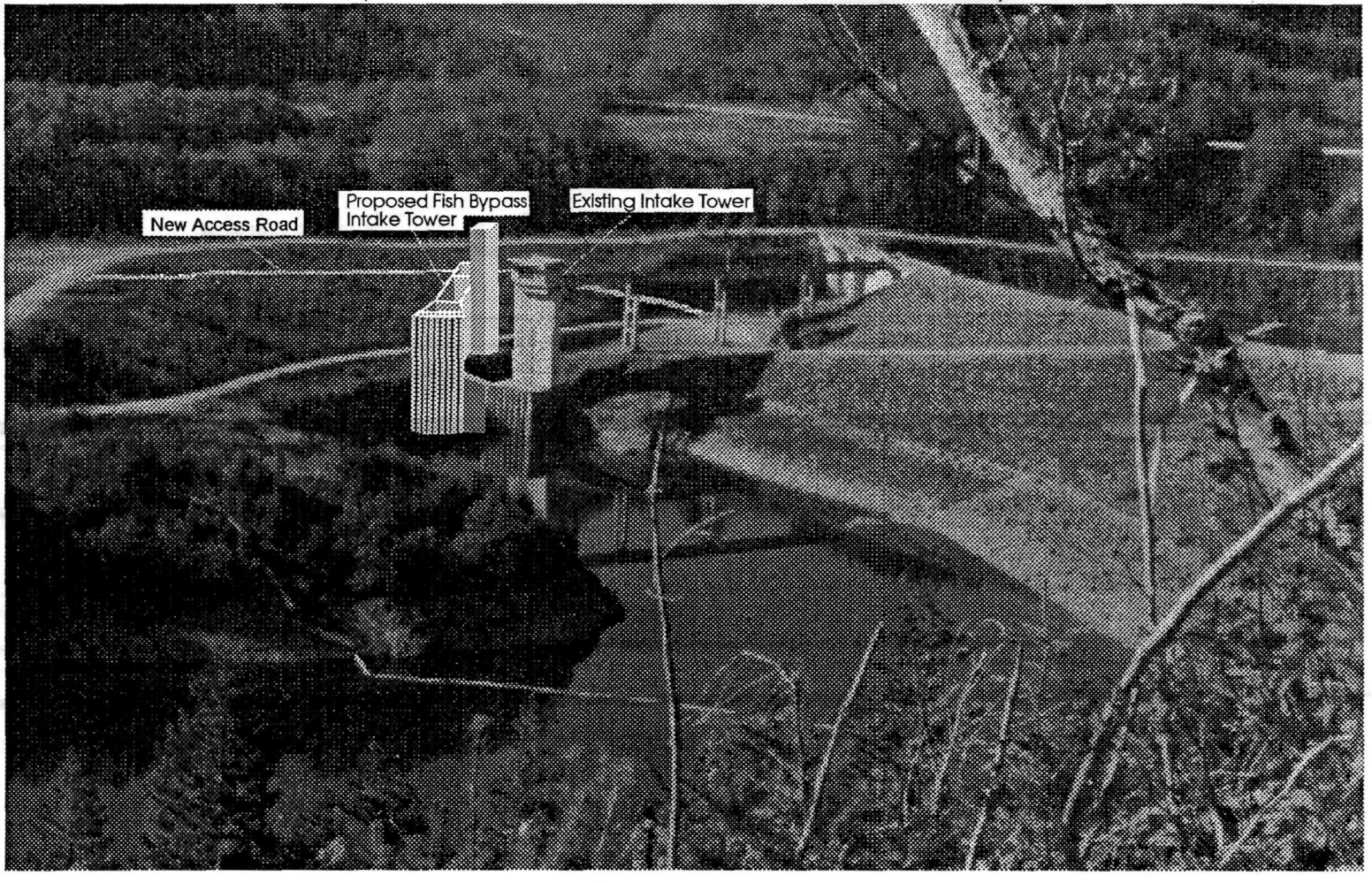

Middle-Upper Green River

▲ Mitigation Sites
Restoration Sites

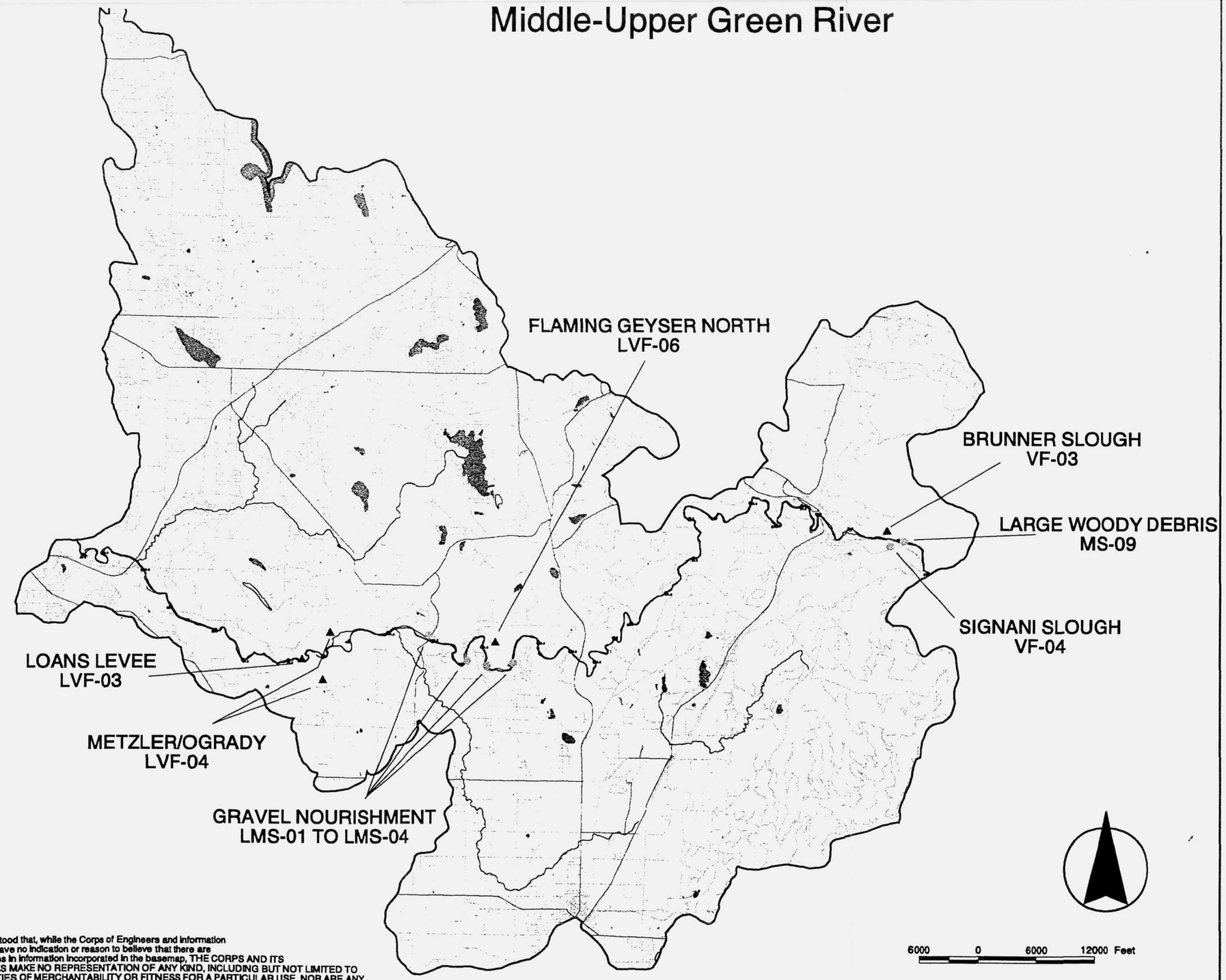

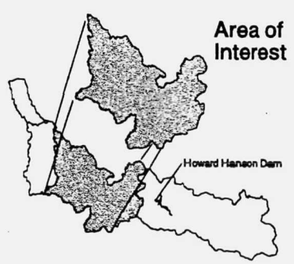

Site locations provided by Seattle District Corps of Engineers.

River and transporation information obtained from Washington State Dept. of Natural Resources

Figure 4-5
Fish Mitigation and Restoration Sites

Corps of Engineers
Date: 04/02/98
Preparer: DFF

It is understood that, while the Corps of Engineers and information suppliers have no indication or reason to believe that there are inaccuracies in information incorporated in the basemap, THE CORPS AND ITS SUPPLIERS MAKE NO REPRESENTATION OF ANY KIND, INCLUDING BUT NOT LIMITED TO WARRANTIES OF MERCHANTABILITY OR FITNESS FOR A PARTICULAR USE, NOR ARE ANY SUCH WARRANTIES TO BE IMPLIED WITH RESPECT TO THE INFORMATION, DATA, OR SERVICE FURNISHED HEREIN.

Upper Green River

Site locations provided by Seattle District Corps of Engineers.

River and transporation information obtained from Washington State Dept. of Natural Resources

Figure 4-6
Fish Mitigation and Restoration Sites

Corps of Engineers
Date: 04/02/98
Preparer: DFF

It is understood that, while the Corps of Engineers and information suppliers have no indication or reason to believe that there are inaccuracies in information incorporated in the basemap, THE CORPS AND ITS SUPPLIERS MAKE NO REPRESENTATION OF ANY KIND, INCLUDING BUT NOT LIMITED TO WARRANTIES OF MERCHANTABILITY OR FITNESS FOR A PARTICULAR USE, NOR ARE ANY SUCH WARRANTIES TO BE IMPLIED WITH RESPECT TO THE INFORMATION, DATA, OR SERVICE FURNISHED HEREIN.

Upper Green River

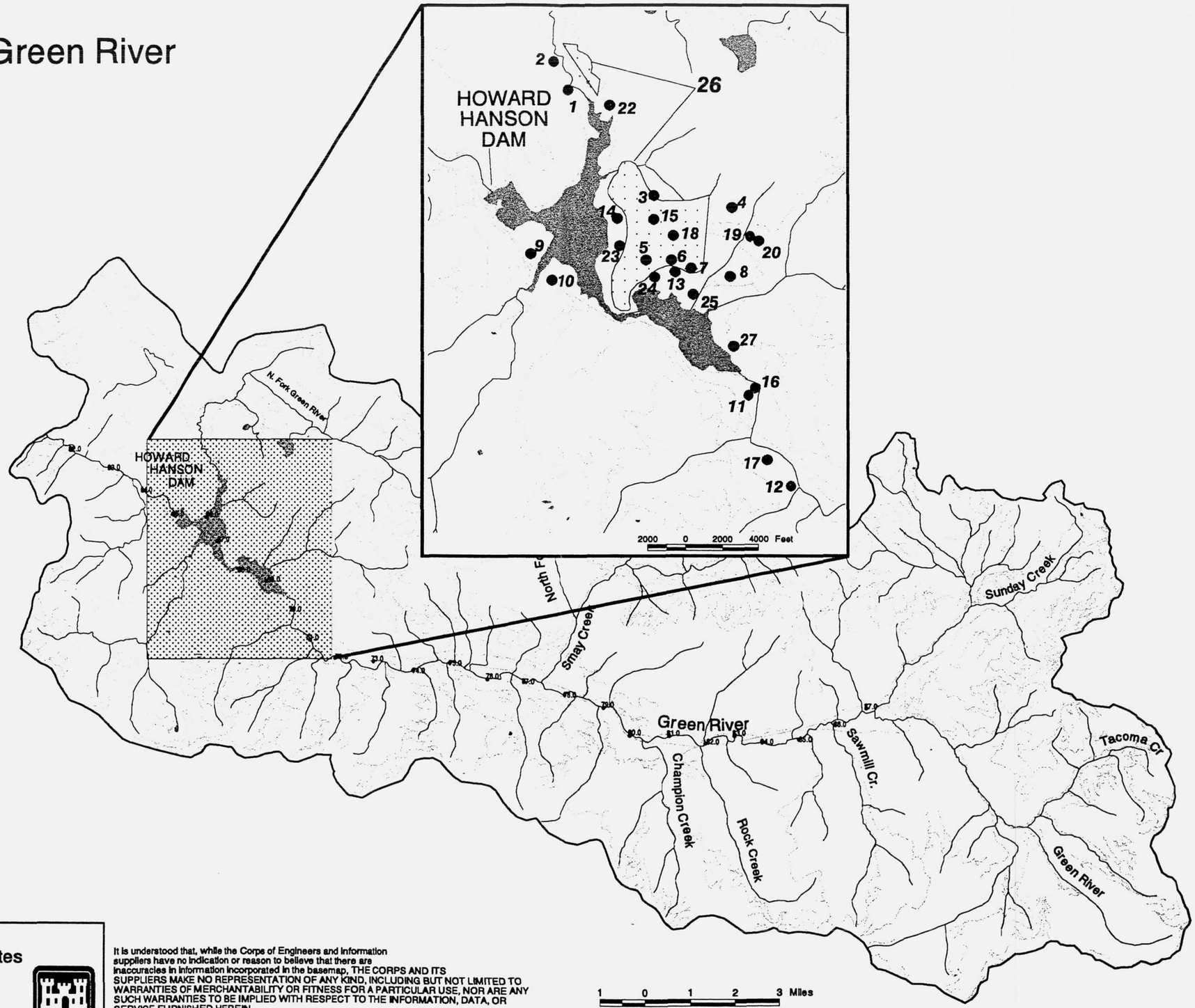

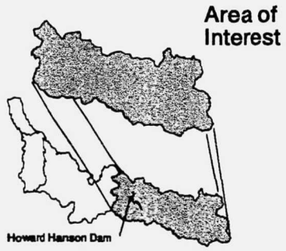

Site locations provided by Seattle District Corps of Engineers.

River and transporation information obtained from Washington State Dept. of Natural Resources

Figure 4-7
Wildlife Mitigation Sites

Corps of Engineers
Date: 04/02/98
Preparer: DFF

It is understood that, while the Corps of Engineers and information suppliers have no indication or reason to believe that there are inaccuracies in information incorporated in the basemap, THE CORPS AND ITS SUPPLIERS MAKE NO REPRESENTATION OF ANY KIND, INCLUDING BUT NOT LIMITED TO WARRANTIES OF MERCHANTABILITY OR FITNESS FOR A PARTICULAR USE, NOR ARE ANY SUCH WARRANTIES TO BE IMPLIED WITH RESPECT TO THE INFORMATION, DATA, OR SERVICE FURNISHED HEREIN.

US Army Corps
of Engineers
Seattle District

HOWARD HANSON DAM
ADDITIONAL WATER STORAGE PROJECT
FISH PASSAGE ALTERNATIVES 9A1-9B2
GREEN RIVER, WASHINGTON

DRAWING INDEX

FILE NO.	SHEET NO.	PLATE NO.	TITLE
	1	G.1	COVER SHEET
	2	S.1	FISH BYPASS STRUCTURE, ALTERNATE 9A1 AND 2, SITE PLAN
	3	S.2	FISH BYPASS STRUCTURE, ALTERNATE 9A1, DETAILS
	4	S.3	FISH BYPASS STRUCTURE, ALTERNATE 9A2, PLAN AND ELEVATION
	5	S.4	FISH BYPASS STRUCTURE, ALTERNATE 9A2, SECTIONS
	6	S.5	FISH BYPASS STRUCTURE, ALTERNATE 9A3, SITE PLAN
	7	S.6	FISH BYPASS STRUCTURE ALTERNATE 9A3, ELEVATION AND SECTION
	8	S.7	FISH BYPASS STRUCTURE, ALTERNATE 9A3, SECTIONS
	9	S.8	FISH BYPASS STRUCTURE, ALTERNATE 9A4, SITE PLAN
	10	S.9	FISH BYPASS STRUCTURE, ALTERNATE 9A4, SECTIONS AND DETAILS
	11	S.10	FISH BYPASS STRUCTURE, ALTERNATE 9A5, SITE PLAN I
	12	S.11	FISH BYPASS STRUCTURE, ALTERNATE 9A5 SITE PLAN II
	13	S.12	FISH BYPASS STRUCTURE, ALTERNATE 9A5, TUNNEL SECTIONS
	14	S.13	FISH BYPASS STRUCTURE, ALTERNATE 9A5, PLAN I
	15	S.14	FISH BYPASS STRUCTURE, ALTERNATE 9A5, PLAN II
	16	S.15	FISH BYPASS STRUCTURE, ALTERNATE 9A5, SECTIONS
	17	S.16	FISH BYPASS STRUCTURE, ALTERNATE 9A5, STILLING BASIN - PLAN
	18	S.17	FISH BYPASS STRUCTURE, ALTERNATE 9A5, STILLING BASIN - SECTIONS
	19	S.18	FISH BYPASS STRUCTURE, ALTERNATE 9A6, SITE PLAN
	20	S.19	FISH BYPASS STRUCTURE, ALTERNATE 9A6, PLAN
	21	S.20	FISH BYPASS STRUCTURE, ALTERNATE 9A6, ELEVATION AND SECTION
	22	S.21	FISH BYPASS STRUCTURE, ALTERNATE 9A6, STILLING BASIN - PLAN AND SECTION
	23	S.22	FISH BYPASS STRUCTURE, ALTERNATE 9A6, STILLING BASIN - SECTION
	24	S.23	FISH BYPASS STRUCTURE, ALTERNATE 9A7, SITE PLAN
	25	S.24	FISH BYPASS STRUCTURE, ALTERNATE 9A7, PLAN
	26	S.25	FISH BYPASS STRUCTURE, ALTERNATE 9A7, SECTIONS
	27	S.26	FISH BYPASS STRUCTURE, ALTERNATE 9A7, STILLING BASIN - PLAN AND SECTION
	28	S.27	FISH BYPASS STRUCTURE, ALTERNATE 9A7, STILLING BASIN - SECTION
	29	S.28	FISH COLLECTION FACILITY, ALTERNATE 9A8, SITE PLAN - 1, RECOMMENDED PLAN
	30	S.29	FISH COLLECTION FACILITY, ALTERNATE 9A8, SITE PLAN - 2, RECOMMENDED PLAN
	31	S.30	FISH COLLECTION FACILITY, ALTERNATE 9A8, STRUCTURAL PLAN, RECOMMENDED PLAN
	32	S.31	FISH COLLECTION FACILITY, ALTERNATE 9A8, WET-WELL STRUCTURE, SECTION ALONG CENTERLINE
	33	S.32	FISH COLLECTION FACILITY, ALTERNATE 9A8, WET-WELL STRUCTURE, CROSS SECTION
	34	S.33	FISH COLLECTION FACILITY, ALTERNATE 9A8, DISCHARGE CONDUIT AND INTAKE TOWER SECTION ALONG CENTER LINE
	35	S.34	FISH COLLECTION FACILITY, ALTERNATE 9A8, DISCHARGE CONDUIT AND INTAKE TOWER CROSS SECTIONS
	36	S.35	UPSTREAM COLLECTION FACILITY, ALTERNATE 9B1, SITE PLAN
	37	S.36	UPSTREAM COLLECTION FACILITY, ALTERNATE 9B1, PLAN
	38	S.37	UPSTREAM COLLECTION FACILITY, ALTERNATE 9B1, CROSS-SECTION
	39	S.38	UPSTREAM COLLECTION FACILITY, ALTERNATE 9B1, SECTIONS - I
	40	S.39	UPSTREAM COLLECTION FACILITY, ALTERNATE 9B1, SECTION - II
	41	S.40	UPSTREAM COLLECTION FACILITY, ALTERNATE 9B1, SECTION - III
	42	S.41	UPSTREAM COLLECTION FACILITY, ALTERNATE 9B1, SECTION - IV
	43	S.42	UPSTREAM COLLECTION FACILITY, ALTERNATE 9B1, PLAN AND SECTION
	44	S.43	UPSTREAM COLLECTION FACILITY, ALTERNATE 9B2, SITE PLAN
	45	S.44	UPSTREAM COLLECTION FACILITY, ALTERNATE 9B2, PLAN
	46	S.45	UPSTREAM COLLECTION FACILITY, ALTERNATE 9B2, CROSS SECTION
	47	S.46	UPSTREAM COLLECTION FACILITY, ALTERNATE 9B2, SECTIONS - I
	48	S.47	UPSTREAM COLLECTION FACILITY, ALTERNATE 9B2, SECTION - II
	49	S.48	UPSTREAM COLLECTION FACILITY, ALTERNATE 9B2, SECTION - III
	50	S.49	UPSTREAM COLLECTION FACILITY, ALTERNATE 9B2, SECTION - IV

VICINITY MAP
NOT TO SCALE

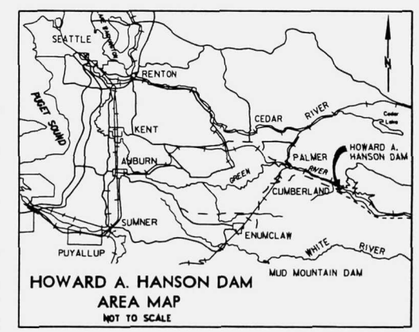

HOWARD A. HANSON DAM
AREA MAP
NOT TO SCALE

FY 97

SAFETY PAYS

REDUCED TO 50% OF FULL SIZE

PREPARED:
DESIGN MANAGER
REVIEWED:
CHIEF, SPECIFICATIONS & REVIEW SECTION
SUBMITTED:
CHIEF, DESIGN BRANCH
RECOMMENDED:
CHIEF, ENGINEERING DIVISION
APPROVED:
DONALD T. WYNN
COL. C.O.E., DISTRICT ENGINEER

U.S. ARMY ENGINEER DISTRICT, SEATTLE
CORPS OF ENGINEERS
SEATTLE, WASHINGTON

HOWARD HANSON DAM
ADDITIONAL WATER STORAGE PROJECT

COVER SHEET

GREEN RIVER WASHINGTON

SIZE	INVITATION NO.	FILE NO.	DATE	PLATE
D		E-56-14-17	97JUL14	G.1
DSGN. FVM/LFF		CHK. MOYES	SHEET 1 OF 50	

DATE AND TIME PLOTTED: 09-JUL-1997 16:00
DESIGN FILE: I:\designs\hhaw\general\hhawgg0a.dgn

DATE AND TIME PLOTTED: 09-JUL-1997 16:00
DESIGN FIL #designs#hhaw#general#hhawgg0a.dgn

REVISIONS				
SYMBOL	ZONE	DESCRIPTION	DATE	BY

1" = 40' 40' 20' 0 40' 80'

REDUCED TO 50% OF FULL SIZE

U.S. ARMY ENGINEER DISTRICT, SEATTLE
CORPS OF ENGINEERS
SEATTLE, WASHINGTON

HOWARD HANSON DAM
ADDITIONAL WATER STORAGE PROJECT

FISH BYPASS STRUCTURE
ALTERNATIVES 9A1 AND 2
SITE PLAN

GREEN RIVER WASHINGTON

SIZE	INVITATION NO.	FILE NO.	DATE	PLATE
D		E-56-14-17	97JUL14	S.1
DSGN. FRAGOMELI		CHK.	SHEET 2 OF 50	

DESIGN FILE: I:#designs#hhaw#str#HHAWSAOJ.dgn
DATE AND TIME PLOTTED: 09-JUL-1997 11:24

DESIGN FILE: I:#designs#hhaw#str#HHAWSAOJ.dgn
DATE AND TIME PLOTTED: 09-JUL-1997 11:24

REVISIONS				
SYMBOL	ZONE	DESCRIPTION	DATE	BY

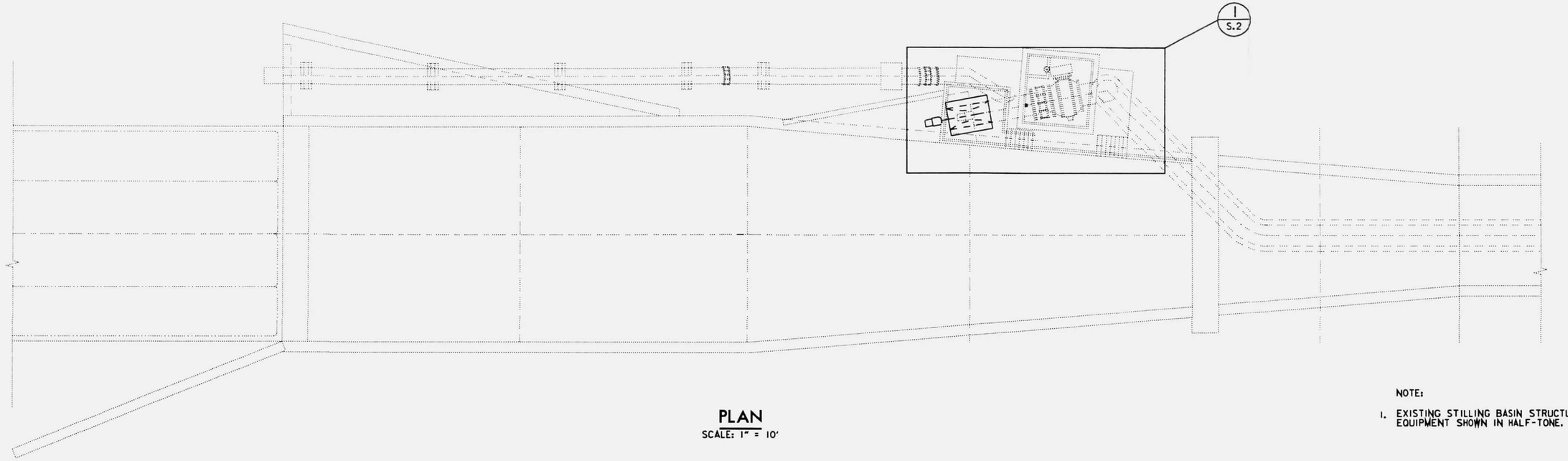

PLAN

SCALE: 1" = 10'

NOTE:

1. EXISTING STILLING BASIN STRUCTURE AND EQUIPMENT SHOWN IN HALF-TONE.

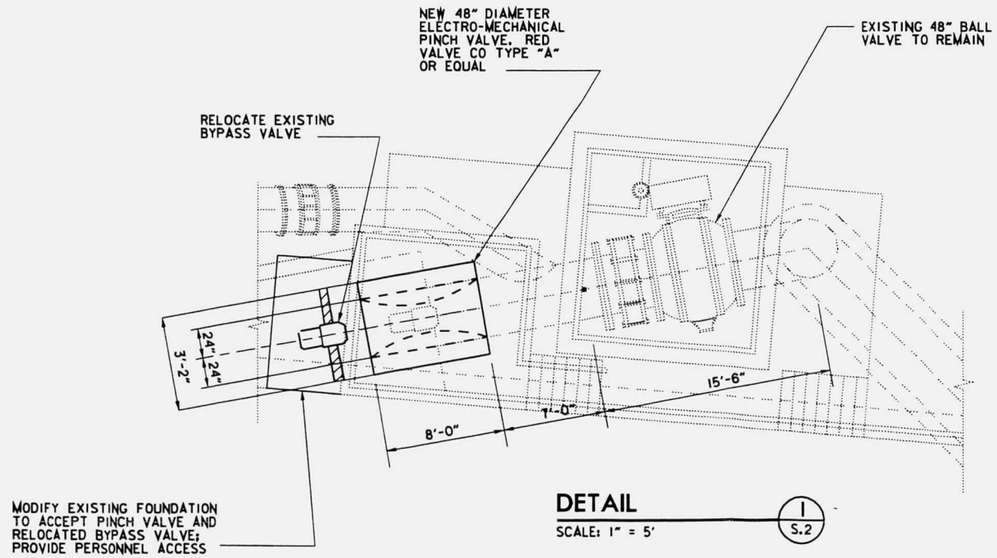

DETAIL

SCALE: 1" = 5'

1
S.2

1" = 5' 5' 0 5' 10'

1" = 10' 10' 5' 0 10' 20'

REDUCED TO 50% OF FULL SIZE

U.S. ARMY ENGINEER DISTRICT, SEATTLE
CORPS OF ENGINEERS
SEATTLE, WASHINGTON

HOWARD HANSON DAM
ADDITIONAL WATER STORAGE PROJECT

FISH BYPASS STRUCTURE
ALTERNATE 9A1
DETAILS

GREEN RIVER WASHINGTON

SIZE	INVITATION NO.	FILE NO.	DATE:	PLATE
D		E-56-14-17	97JUL14	S.2
DSGN. FRAGOMELI		CHK.	SHEET 3 OF 50	

DATE AND TIME PLOTTED: 09-JUL-1997 11:22
DESIGN FILE: I:#designs#hhaw#str#hhawsa0e.dgn

DATE AND TIME PLOTTED: 09-JUL-1997 11:22
DESIGN FI ...#designs#hhaw#str#hhawsa0e.dgn

REVISIONS				
SYMBOL	ZONE	DESCRIPTION	DATE	BY

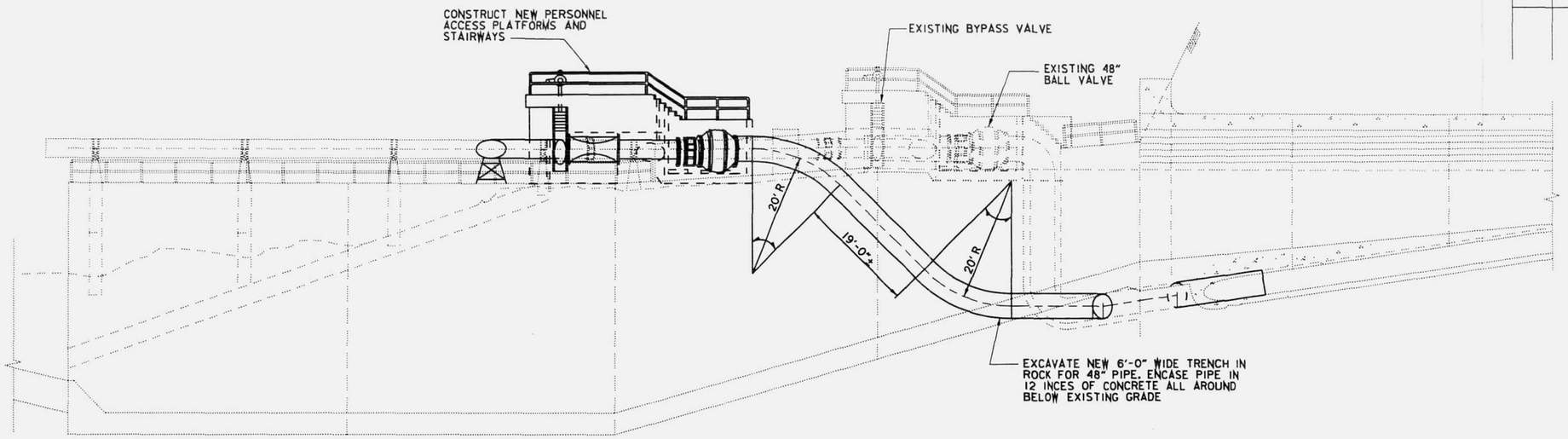

ELEVATION

SCALE: 1" = 10'

NOTES:

1. EXISTING STILLING BASIN STRUCTURE AND EQUIPMENT SHOWN IN HALFTONE.

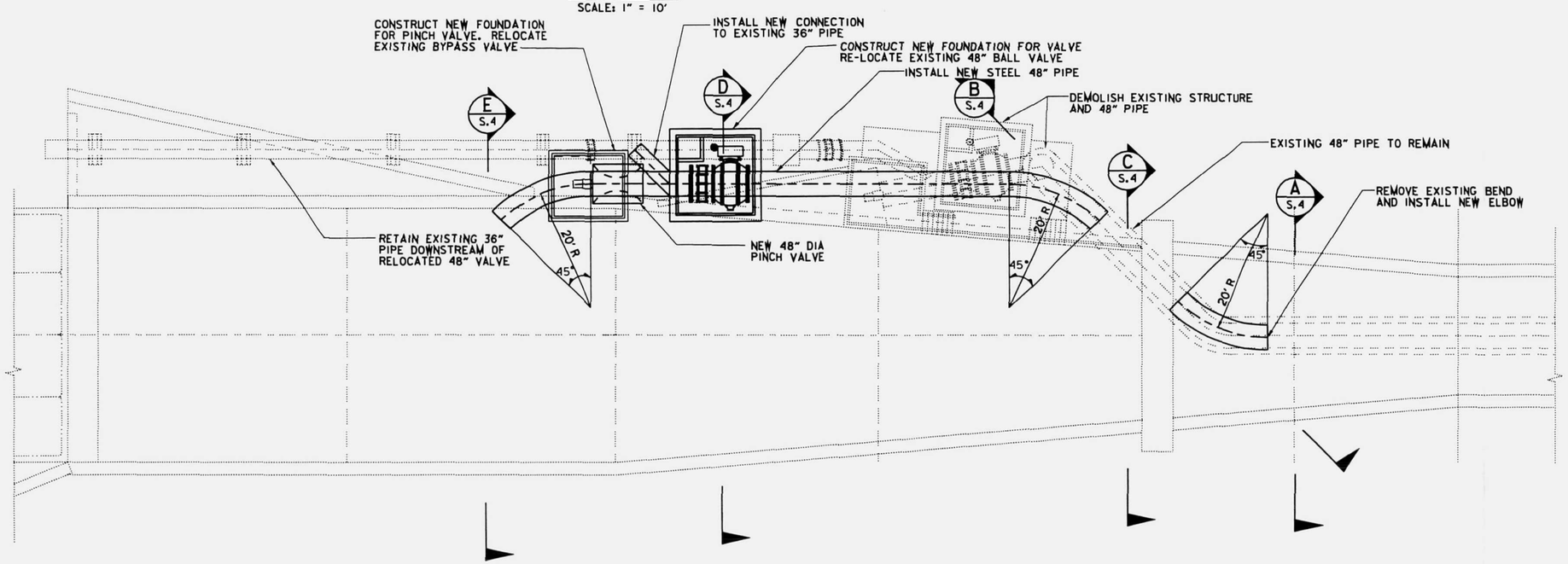

PLAN

SCALE: 1" = 10'

1" = 10' 10' 5' 0 10' 20'

REDUCED TO 50% OF FULL SIZE

U.S. ARMY ENGINEER DISTRICT, SEATTLE
CORPS OF ENGINEERS
SEATTLE, WASHINGTON

HOWARD HANSON DAM
ADDITIONAL WATER STORAGE PROJECT

FISH BYPASS STRUCTURE
ALTERNATIVE 9A2
PLAN AND ELEVATION

GREEN RIVER WASHINGTON

SIZE	INVITATION NO.	FILE NO.	DATE:	PLATE
D		E-56-14-17	97JUL14	S.3
DSGN. FRAGOMELI		CHK.	SHEET 4 OF 50	

DATE AND TIME PLOTTED: 09-JUL-1997 11:25
DESIGN FILE: I:\designs\hhow\str\HHAWSA0D.dgn

DATE AND TIME PLOTTED: 09-JUL-1997 11:25
DESIGN FILE: I:\designs\hhow\str\HHAWSA0D.dgn

REVISIONS				
SYMBOL	ZONE	DESCRIPTION	DATE	BY

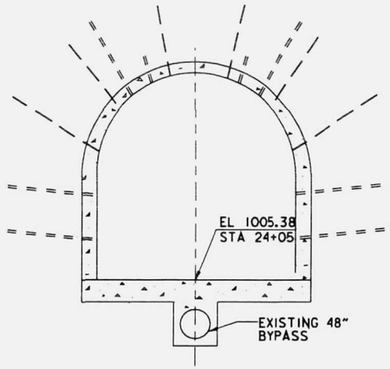

SECTION A / S.3
SCALE: 1" = 10'

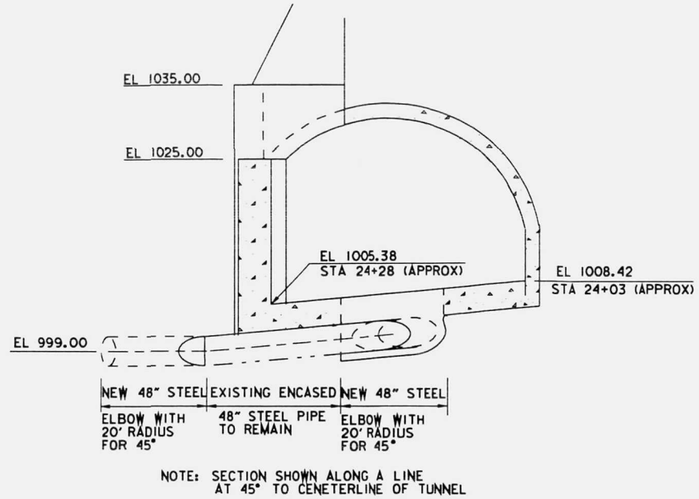

NOTE: SECTION SHOWN ALONG A LINE AT 45° TO CENETERLINE OF TUNNEL

SECTION B / S.3
SCALE: 1" = 10'

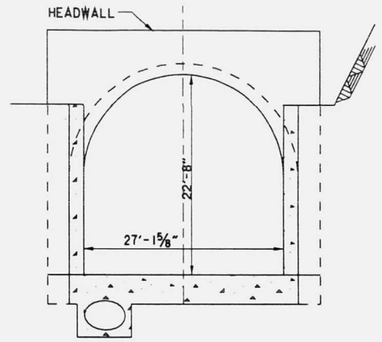

SECTION C / S.3
SCALE: 1" = 10'

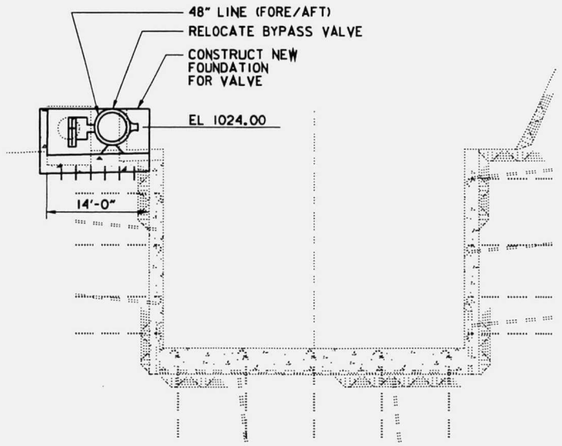

SECTION D / S.3
SCALE: 1" = 10'

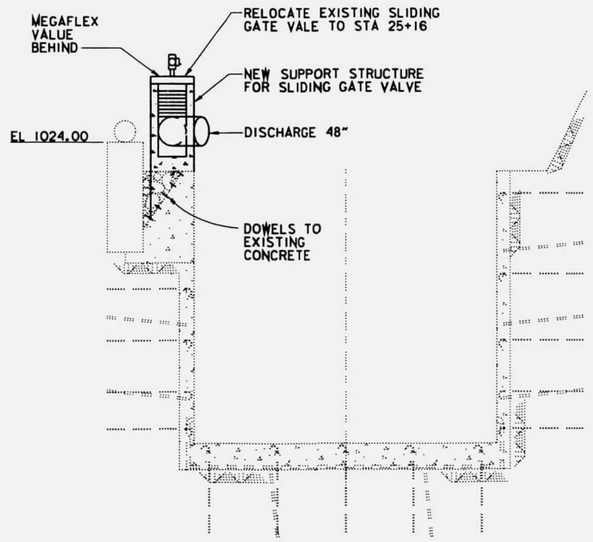

SECTION E / S.3
SCALE: 1" = 10'

1" = 10' 10' 5' 0 10' 20'

REDUCED TO 50% OF FULL SIZE

U.S. ARMY ENGINEER DISTRICT, SEATTLE
CORPS OF ENGINEERS
SEATTLE, WASHINGTON

HOWARD HANSON DAM
ADDITIONAL WATER STORAGE PROJECT
FISH BYPASS STRUCTURE
ALTERNATIVE 9A2
SECTIONS

GREEN RIVER WASHINGTON

SIZE	INVITATION NO.	FILE NO.	DATE:	PLATE
D		E-56-14-17	97JUL14	S.4
DSGN. FRAGOMELI		CHK.	SHEET 5 OF 50	

DATE AND TIME PLOTTED: 09-JUL-1997 11:25
DESIGN FILE: I:\designs\hhaw\str\HHAWSAOG.dgn

DATE AND TIME PLOTTED: 09-JUL-1997 11:25
DESIGN FIL ...designs\hhaw\str\HHAWSAOG.dgn

REVISIONS				
SYMBOL	ZONE	DESCRIPTION	DATE	BY

SITE PLAN

SCALE: 1" = 40'

1" = 40' 40' 20' 0 40' 80'

REDUCED TO 50% OF FULL SIZE

U.S. ARMY ENGINEER DISTRICT, SEATTLE
CORPS OF ENGINEERS
SEATTLE, WASHINGTON

HOWARD HANSON DAM
ADDITIONAL WATER STORAGE PROJECT

FISH BYPASS STRUCTURE
ALTERNATIVE 9A3
SITE PLAN

GREEN RIVER WASHINGTON

SIZE	INVITATION NO.	FILE NO.	DATE:	PLATE
D		E-56-14-17	97JUL14	S.5
DSGN. FRAGOMELI		CHK.	SHEET 6 OF 50	

DESIGN FILE: I:#designs#hhaw#str#HHAWSAOP.dgn
DATE AND TIME PLOTTED: 09-JUL-1997 11:26

DESIGN FILE: I:#designs#hhaw#str#HHAWSAOP.dgn
DATE AND TIME PLOTTED: 09-JUL-1997 11:26

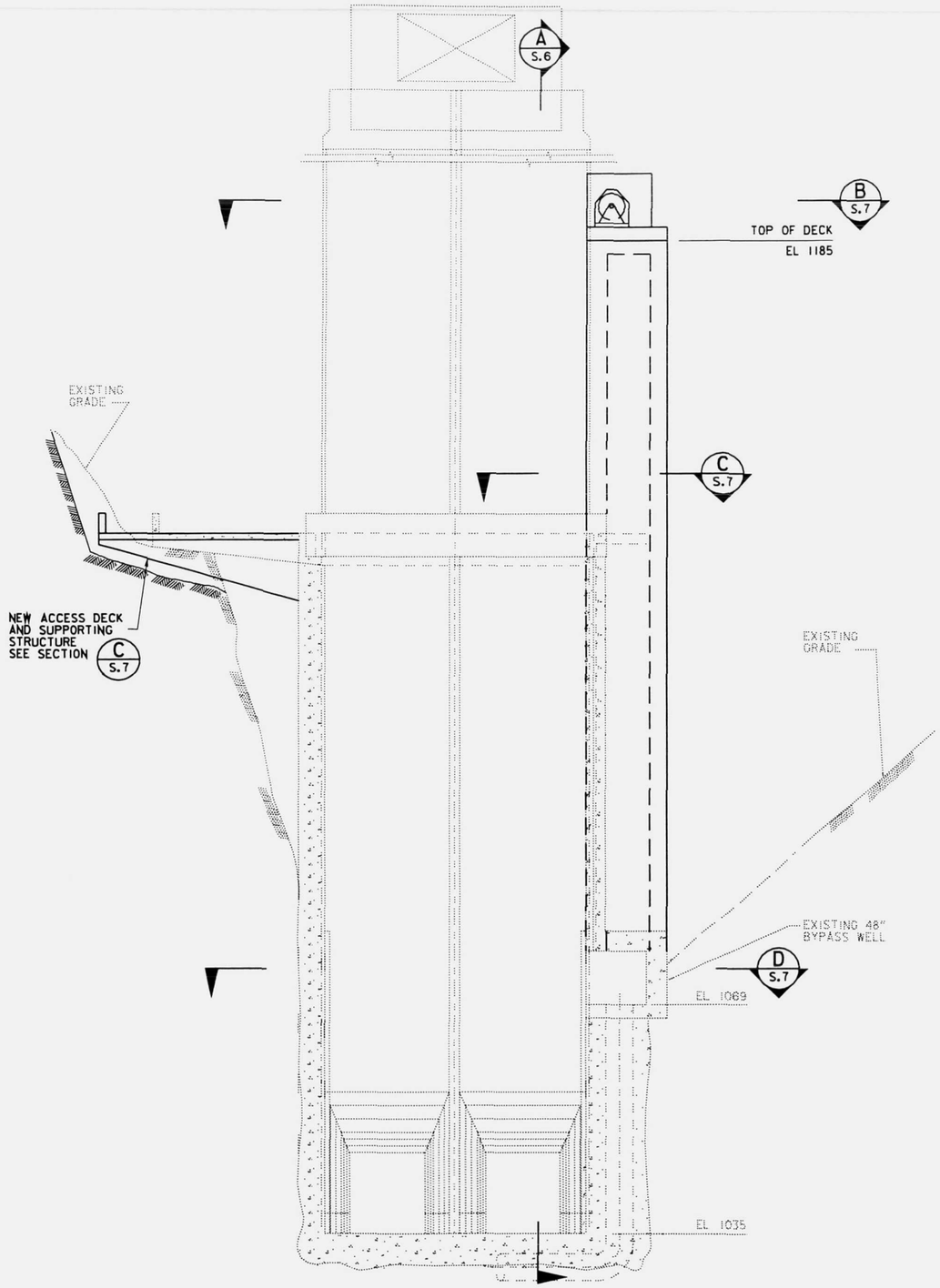

ELEVATION

SCALE: 1" = 10'

SECTION SHOWN LOOKING DOWNSTREAM

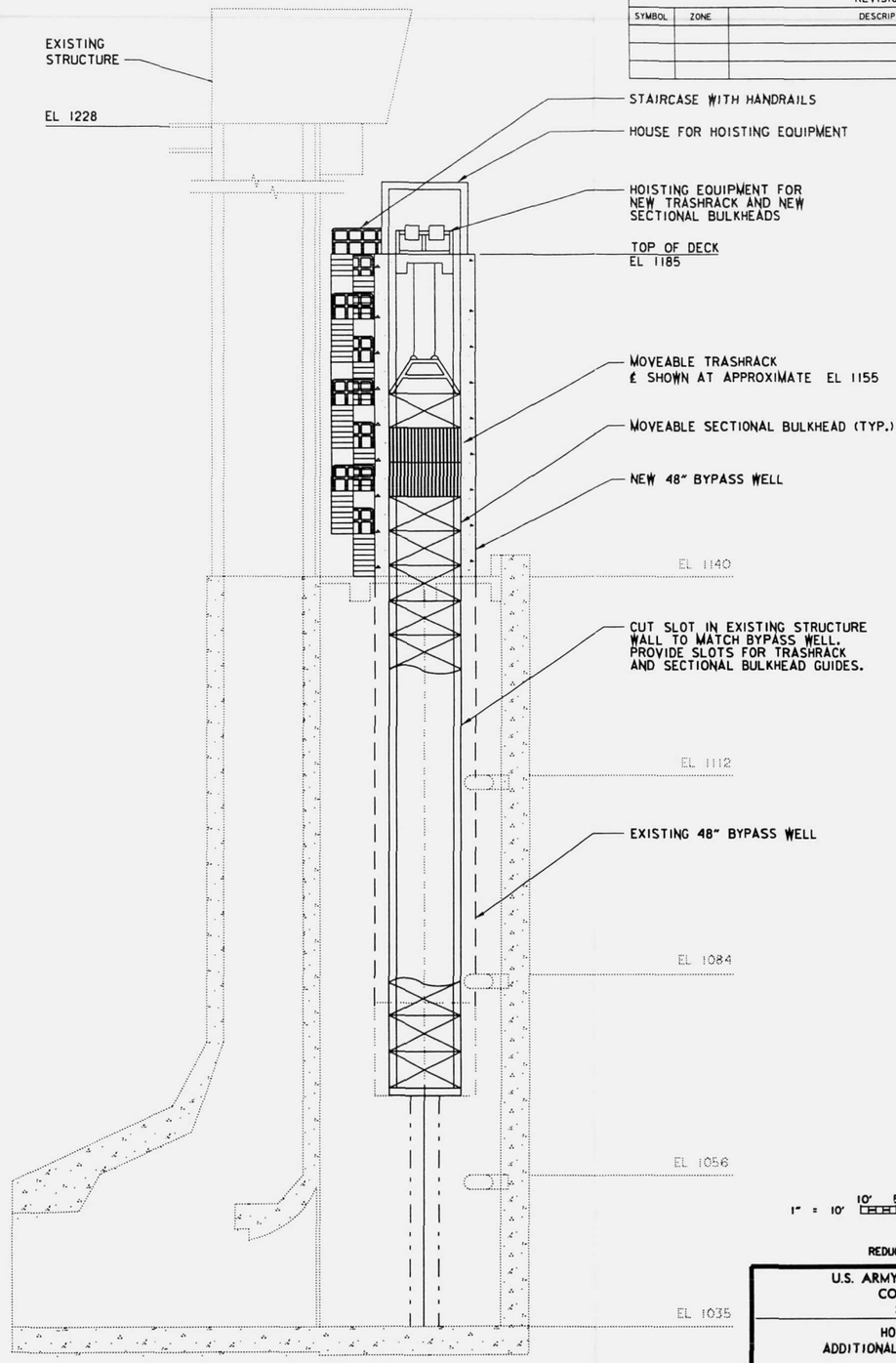

SECTION

SCALE: 1" = 10'

A
S.6

REVISIONS

SYMBOL	ZONE	DESCRIPTION	DATE	BY

1" = 10' 10' 5' 0 10' 20'

REDUCED TO 50% OF FULL SIZE

U.S. ARMY ENGINEER DISTRICT, SEATTLE
CORPS OF ENGINEERS
SEATTLE, WASHINGTON

HOWARD HANSON DAM
ADDITIONAL WATER STORAGE PROJECT

FISH BYPASS STRUCTURE
ALTERNATIVE 9A3
ELEVATION AND SECTIONS

GREEN RIVER WASHINGTON

SIZE	INVITATION NO.	FILE NO.	DATE	PLATE
D		E-56-14-17	97JUL14	S.6
DSGN. FRAGOMELI		CHK.	SHEET 7 OF 50	

DATE AND TIME PLOTTED: 09-JUL-1997 11:27
DESIGN FILE: i:\designs\hhaw\str\HHAWSAOF.dgn

DATE AND TIME PLOTTED: 09-JUL-1997 11:27
DESIGN FILE: i:\designs\hhaw\str\HHAWSAOF.dgn

REVISIONS				
SYMBOL	ZONE	DESCRIPTION	DATE	BY

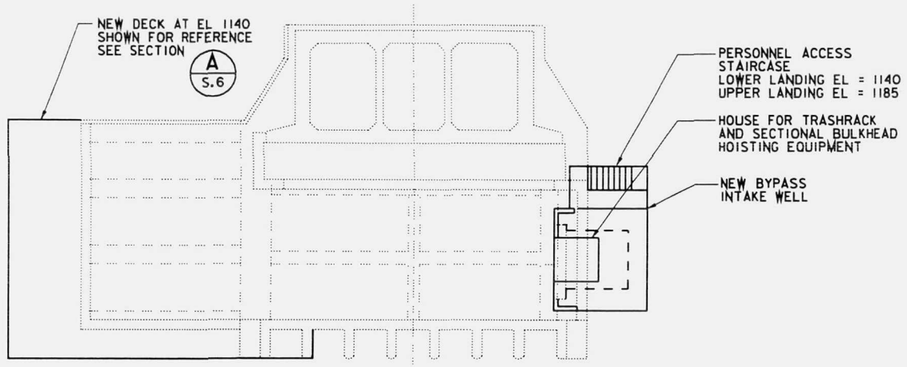

SECTION B S.6

SCALE: 1" = 10'

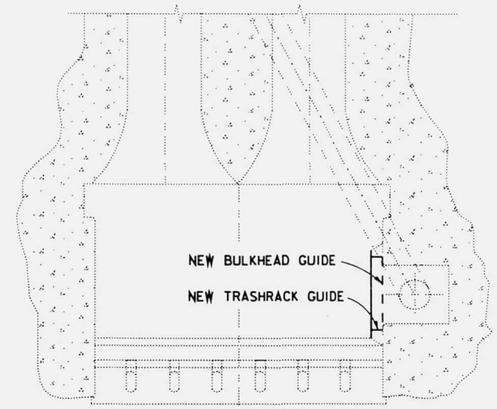

SECTION D S.6

SCALE: 1" = 10'

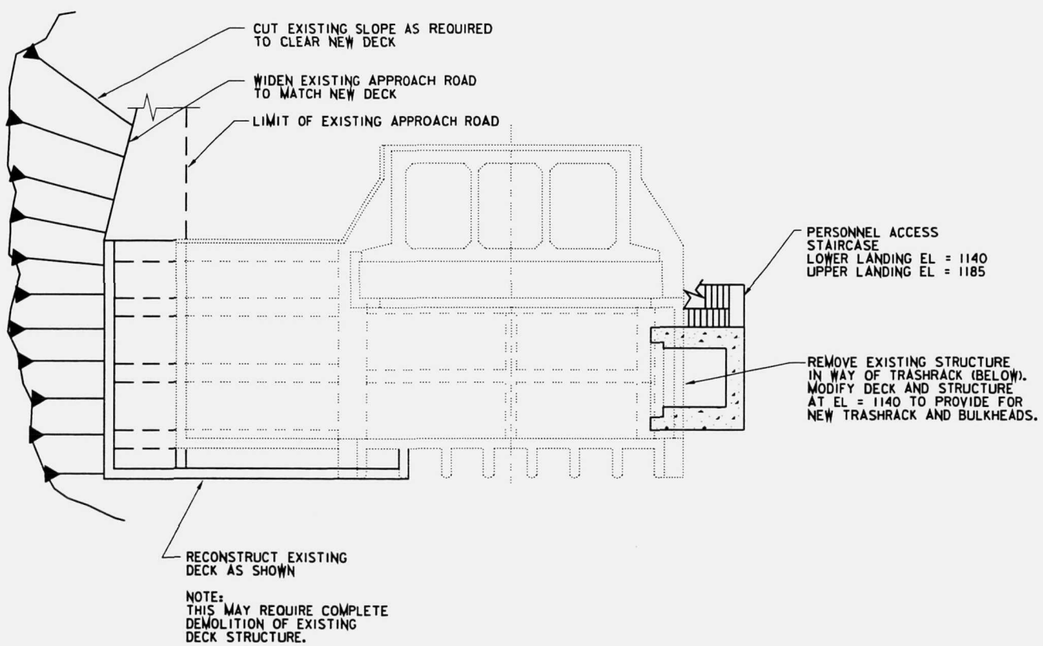

NOTE:
THIS MAY REQUIRE COMPLETE
DEMOLITION OF EXISTING
DECK STRUCTURE.

SECTION C S.6

SCALE: 1" = 10'

1" = 10' 10' 5' 0 10' 20'

REDUCED TO 50% OF FULL SIZE

U.S. ARMY ENGINEER DISTRICT, SEATTLE
CORPS OF ENGINEERS
SEATTLE, WASHINGTON

HOWARD HANSON DAM
ADDITIONAL WATER STORAGE PROJECT

FISH BYPASS STRUCTURE
ALTERNATIVE 9A3
SECTIONS

GREEN RIVER WASHINGTON

SIZE	INVITATION NO.	FILE NO.	DATE:	PLATE
D		E-56-14-17	97JUL14	S.7
DSGN. FRAGOMELI		CHK.	SHEET 8 OF 50	

DATE AND TIME PLOTTED: 09-JUL-1997 11:27
DESIGN FILE: I:\designs\hhaw\str\HHAWSAOH.dgn

DATE AND TIME PLOTTED: 09-JUL-1997 11:27
DESIGN FILE: I:\designs\hhaw\str\HHAWSAOH.dgn

REVISIONS				
SYMBOL	ZONE	DESCRIPTION	DATE	BY

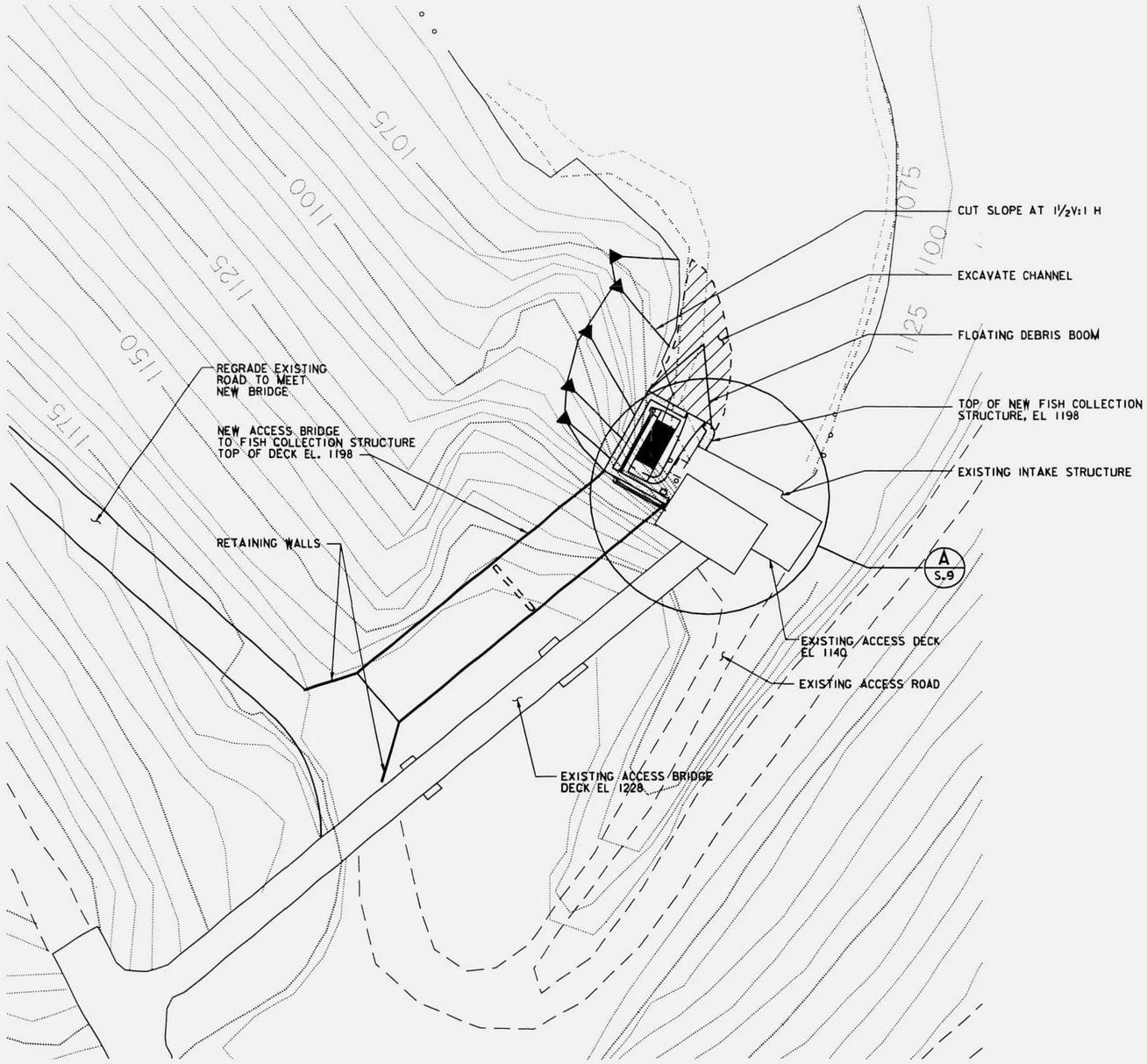

PLAN

SCALE: 1" = 30'

1" = 10' 10' 5' 0 10' 20'

1" = 30' 30' 15' 0 30' 60'

REDUCED TO 50% OF FULL SIZE

U.S. ARMY ENGINEER DISTRICT, SEATTLE
CORPS OF ENGINEERS
SEATTLE, WASHINGTON

HOWARD HANSON DAM
ADDITIONAL WATER STORAGE PROJECT

FISH BYPASS STRUCTURE
ALTERNATIVE 9A4
SITE PLAN

GREEN RIVER WASHINGTON

SIZE	INVITATION NO.	FILE NO.	DATE:	PLATE
D		E-56-14-17	97JUL14	S.8
DSGN. FRAGOMELI		CHK.	SHEET 9 OF 50	

DESIGN FILE: I:#designs#hhaw#str#HHAWSA0A.dgn
DATE AND TIME PLOTTED: 09-JUL-1997 11:28

DESIGN FILE: I:#designs#hhaw#str#HHAWSA0A.dgn
DATE AND TIME PLOTTED: 09-JUL-1997 11:28

REVISIONS				
SYMBOL	ZONE	DESCRIPTION	DATE	BY

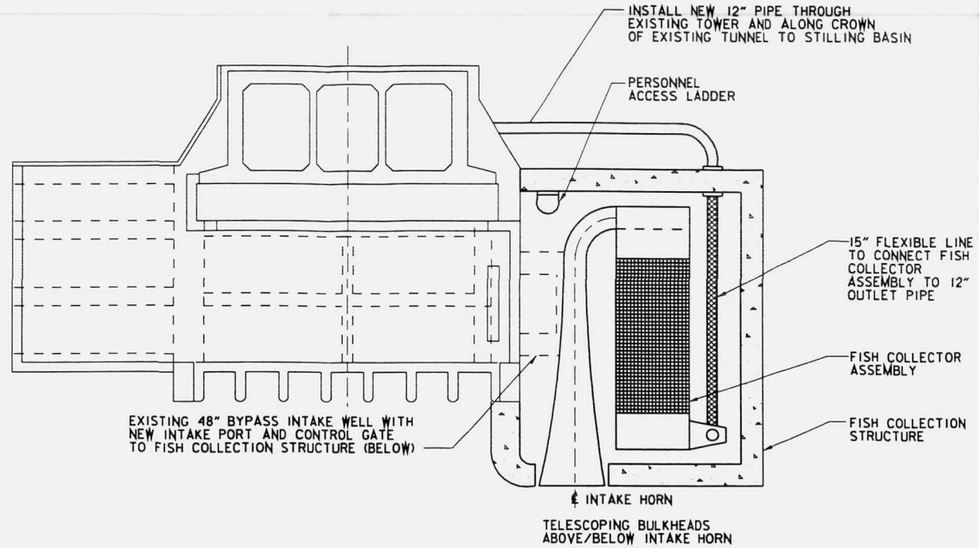

SECTION B/S.9

SCALE: 1" = 10'

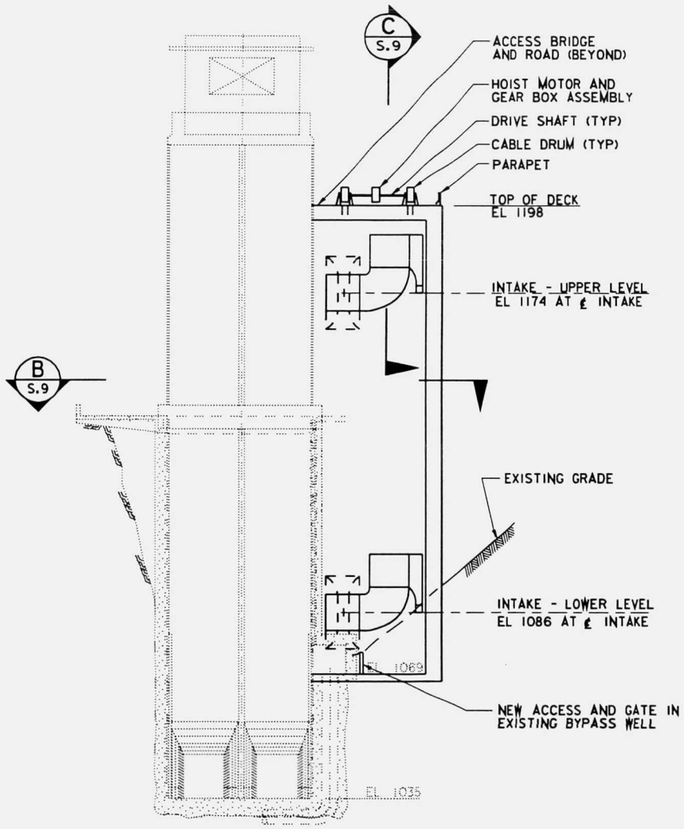

DETAIL A/S.9

SCALE: 1" = 20'

SECTIONAL ELEVATION SHOWN LOOKING DOWNSTREAM

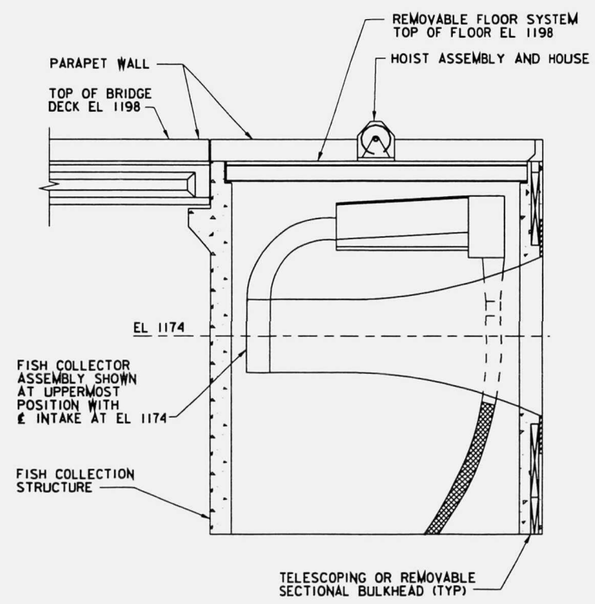

SECTION C/S.9

SCALE: 1" = 10'

1" = 10' 10' 5' 0 10' 20'

1" = 20' 20' 10' 0 20' 40'

REDUCED TO 50% OF FULL SIZE

U.S. ARMY ENGINEER DISTRICT, SEATTLE
CORPS OF ENGINEERS
SEATTLE, WASHINGTON

HOWARD HANSON DAM
ADDITIONAL WATER STORAGE PROJECT

FISH BYPASS STRUCTURE
ALTERNATIVE 9A4
SECTIONS AND DETAILS

GREEN RIVER WASHINGTON

SIZE	INVITATION NO.	FILE NO.	DATE:	PLATE
D		E-56-14-17	97JUL14	S.9
DSGN: FRAGOMELI		CHK.	SHEET 10 OF 50	

DATE AND TIME PLOTTED: 09-JUL-1997 11:28
DESIGN FILE: I:\designs\hhaw\str\HHAWSA01.dgn

DATE AND TIME PLOTTED: 09-JUL-1997 11:28 DESIGN FI :\designs\hhaw\str\HHAWSA01.dgn

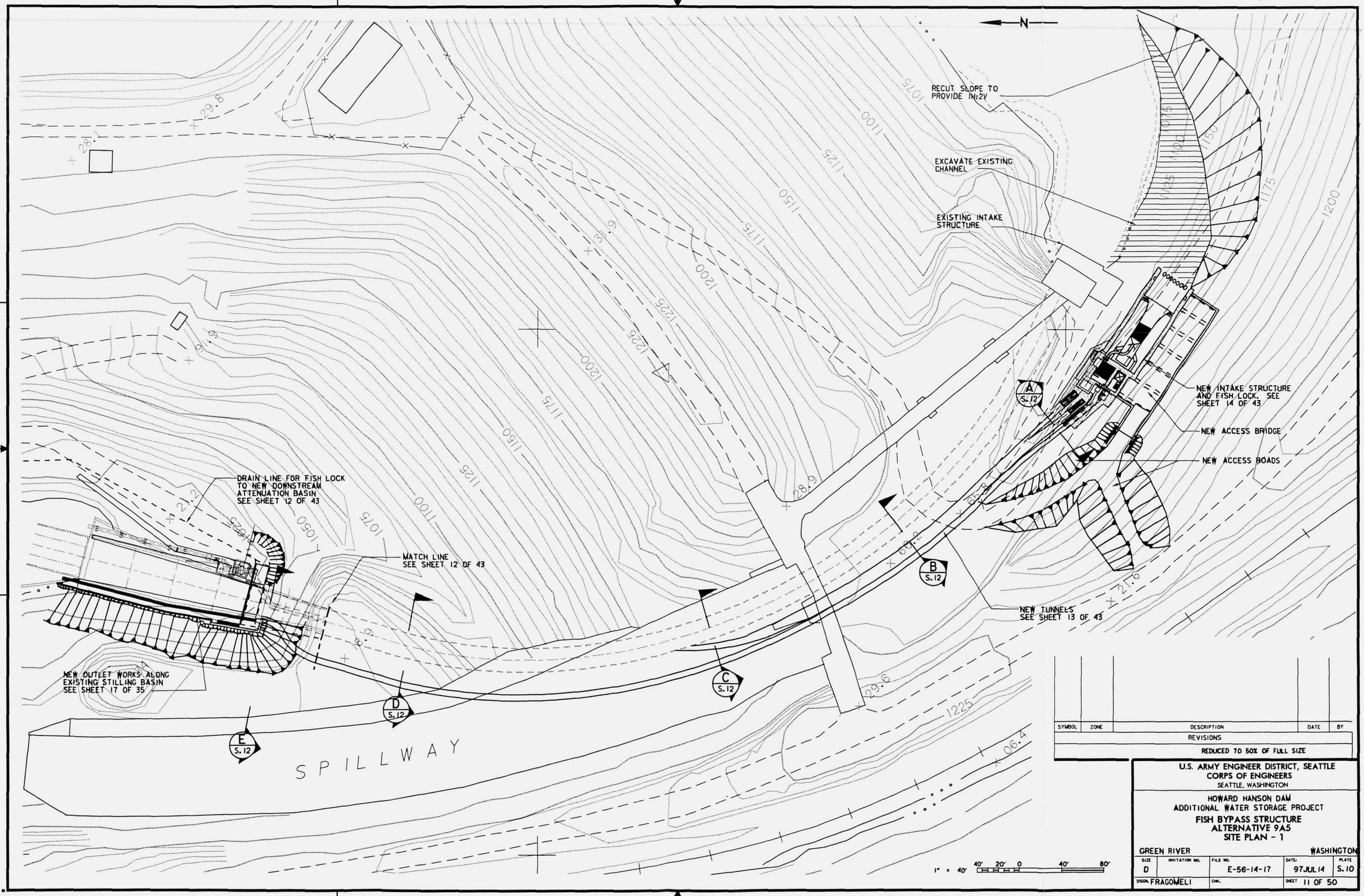

SYMBOL	ZONE	DESCRIPTION	DATE	BY
		REVISIONS		
		REDUCED TO 50% OF FULL SIZE		

U.S. ARMY ENGINEER DISTRICT, SEATTLE
CORPS OF ENGINEERS
SEATTLE, WASHINGTON

HOWARD HANSON DAM
ADDITIONAL WATER STORAGE PROJECT

FISH BYPASS STRUCTURE
ALTERNATIVE 9A5
SITE PLAN - 1

GREEN RIVER — WASHINGTON

SIZE	INVITATION NO.	FILE NO.	DATE	PLATE
D		E-56-14-17	97JUL14	S.10
DSGN. FRAGOMELI		CHK.	SHEET 11 OF 50	

DATE AND TIME PLOTTED: 09-JUL-1997 11:29
DESIGN FILE: I:\designs\hhaw\str\HHAWSAOL.dgn

DESIGN FILE: I:\designs\hhaw\str\HHAWSAOL.dgn
DATE AND TIME PLOTTED: 09-JUL-1997 11:29

REVISIONS				
SYMBOL	ZONE	DESCRIPTION	DATE	BY

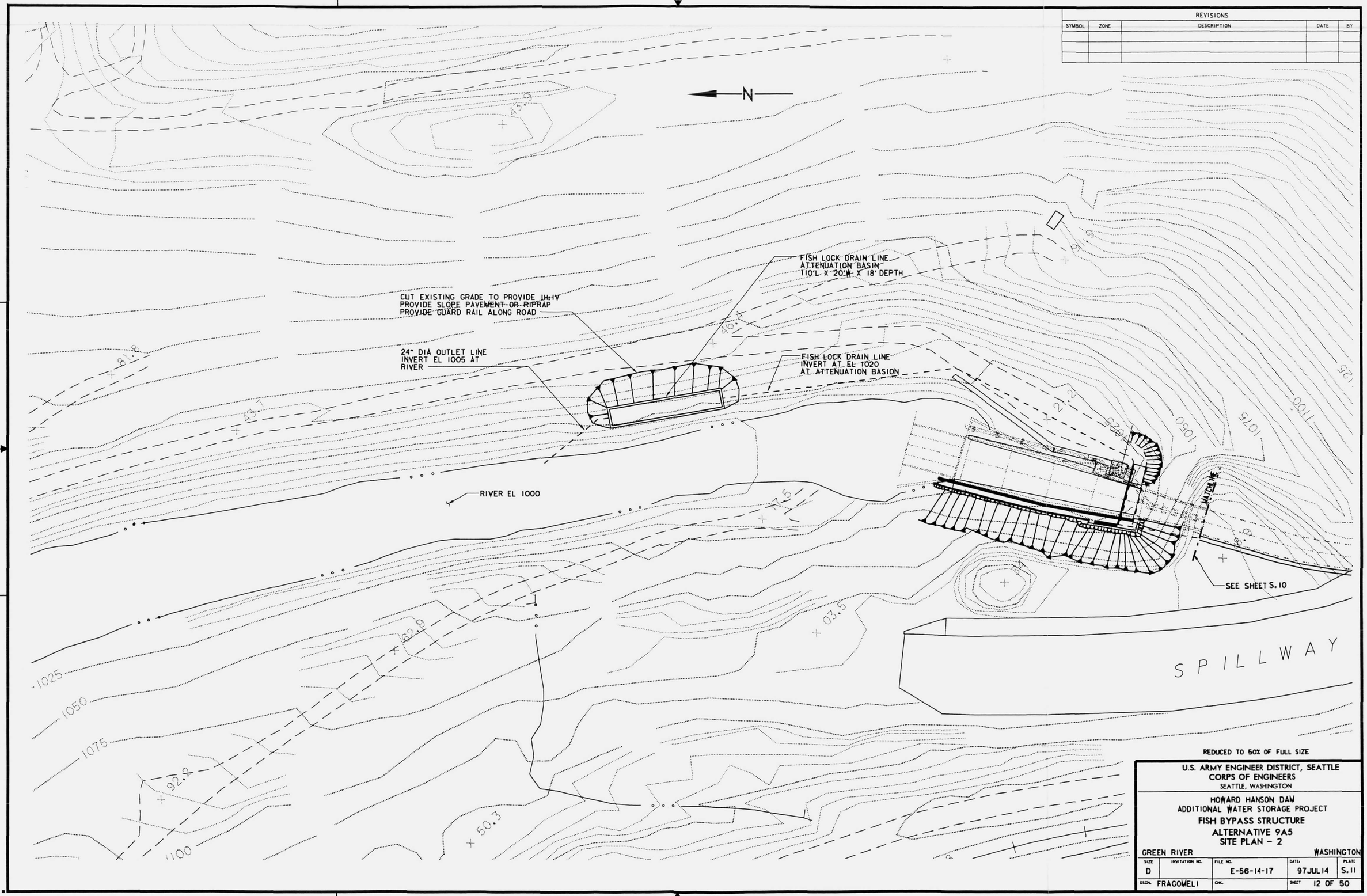

REDUCED TO 50% OF FULL SIZE

U.S. ARMY ENGINEER DISTRICT, SEATTLE
CORPS OF ENGINEERS
SEATTLE, WASHINGTON

HOWARD HANSON DAM
ADDITIONAL WATER STORAGE PROJECT
FISH BYPASS STRUCTURE
ALTERNATIVE 9A5
SITE PLAN – 2

GREEN RIVER WASHINGTON

SIZE	INVITATION NO.	FILE NO.	DATE:	PLATE
D		E-56-14-17	97JUL14	S.11
DSGN. FRAGOMELI		CHK.	SHEET 12 OF 50	

DATE AND TIME PLOTTED: 09-JUL-1997 11:30
DESIGN FILE: I:\designs\hhaw\str\HHAWSAOR.dgn

DATE AND TIME PLOTTED: 09-JUL-1997 11:30
DESIGN FI #designs#hhaw#str#HHAWSAOR.dgn

REVISIONS				
SYMBOL	ZONE	DESCRIPTION	DATE	BY

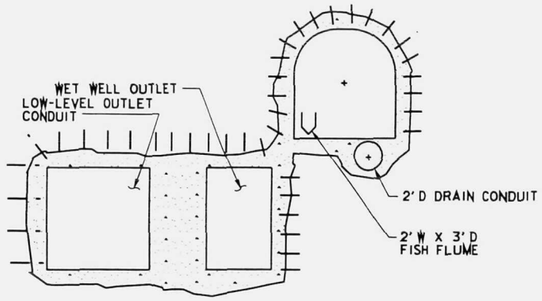

SECTION A (S.10)
SCALE: 1" = 5'

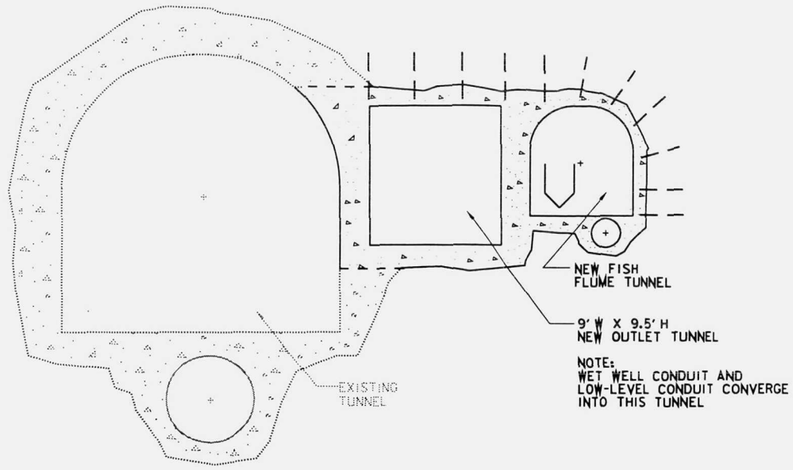

SECTION B (S.10)
SCALE: 1" = 5'

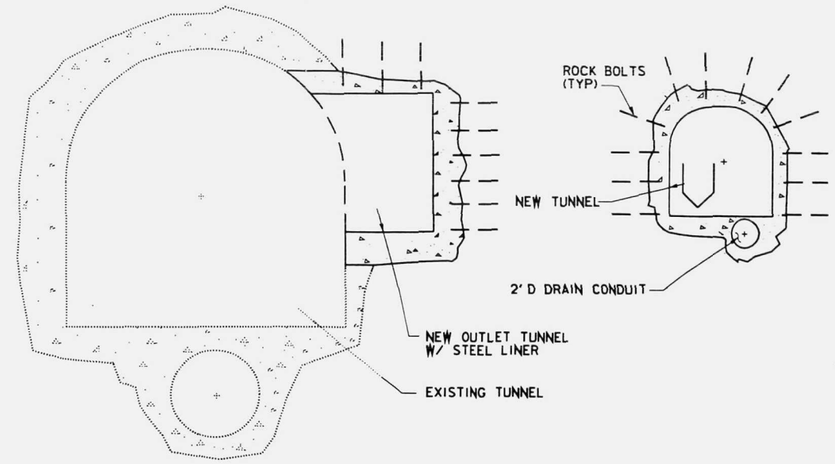

SECTION C (S.10)
SCALE: 1" = 5'

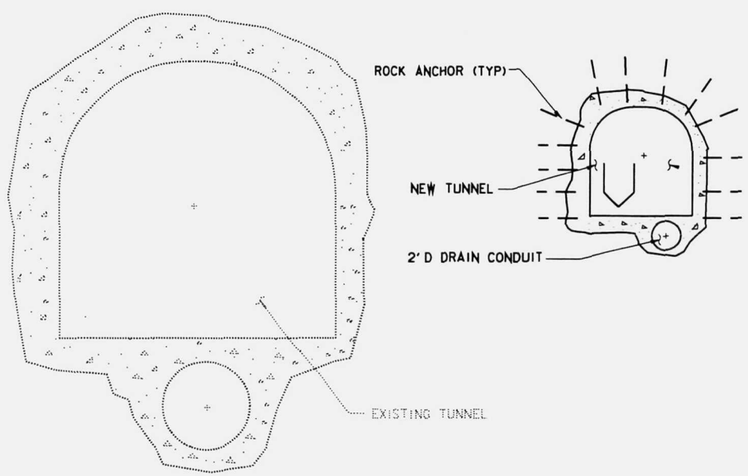

SECTION D (S.10)
SCALE: 1" = 5'

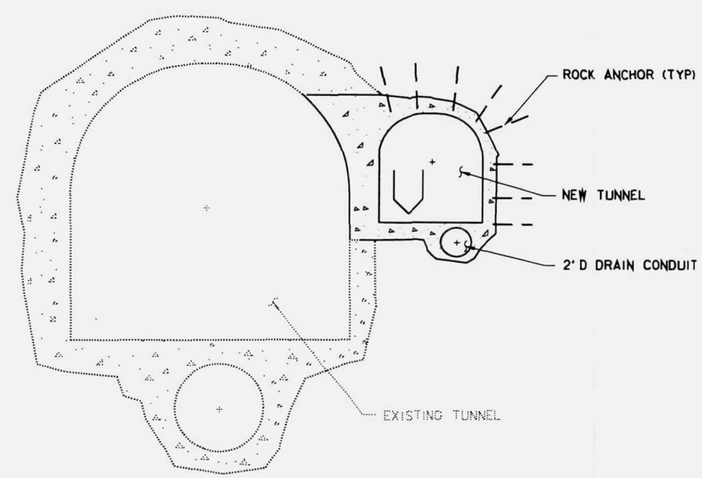

SECTION E (S.10)
SCALE: 1" = 5'

1" = 5' 5' 0 5' 10'

REDUCED TO 50% OF FULL SIZE

U.S. ARMY ENGINEER DISTRICT, SEATTLE
CORPS OF ENGINEERS
SEATTLE, WASHINGTON

HOWARD HANSON DAM
ADDITIONAL WATER STORAGE PROJECT
FISH BYPASS STRUCTURE
ALTERNATE 9A5
TUNNEL SECTIONS

GREEN RIVER — WASHINGTON

SIZE	INVITATION NO.	FILE NO.	DATE	PLATE
D		E-56-14-17	97JUL14	S.12
DSGN. FRAGOMELI		CHK.	SHEET 13 OF 50	

DATE AND TIME PLOTTED: 09-JUL-1997 11:31
DESIGN FILE: I:\designs\hhaw\str\HHAWSAON.dgn

DATE AND TIME PLOTTED: 09-JUL-1997 11:31
DESIGN FI: \designs\hhaw\str\HHAWSAON.dgn

REVISIONS				
SYMBOL	ZONE	DESCRIPTION	DATE	BY

NOTES:

1. THIS ALTERNATE ALSO PROVIDES PRIMARY RESERVOIR LEVEL AND DISCHARGE CONTROL.

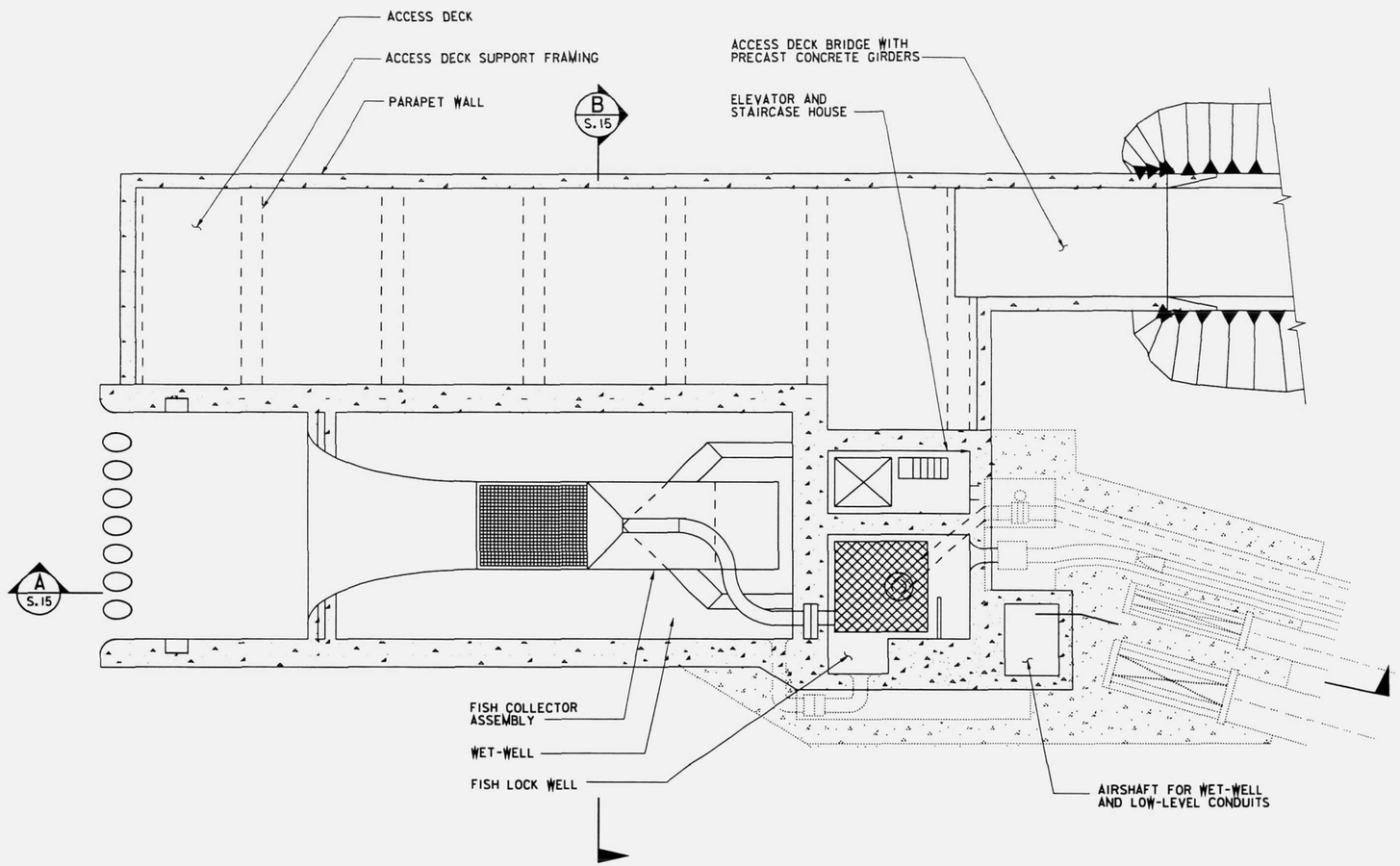

PLAN AT EL 1195

SCALE: 1" = 10'

1" = 10' 10' 5' 0 10' 20'

REDUCED TO 50% OF FULL SIZE

U.S. ARMY ENGINEER DISTRICT, SEATTLE
CORPS OF ENGINEERS
SEATTLE, WASHINGTON

HOWARD HANSON DAM
ADDITIONAL WATER STORAGE PROJECT

FISH BYPASS STRUCTURE
ALTERNATE 9A5
PLAN - 1

GREEN RIVER WASHINGTON

SIZE	INVITATION NO.	FILE NO.	DATE:	PLATE
D		E-56-14-17	97JUL14	S.13
DSGN. FRAGOMELI		CHK.	SHEET 14 OF 50	

COMPUTER AIDED DESIGN & DRAFTING

DATE AND TIME PLOTTED: 09-JUL-1997 11:31
DESIGN FILE: I:\designs\hhaw\str\HHAWSAOX.dgn

DATE AND TIME PLOTTED: 09-JUL-1997 11:31
DESIGN FILE: I:\designs\hhaw\str\HHAWSAOX.dgn

REVISIONS				
SYMBOL	ZONE	DESCRIPTION	DATE	BY

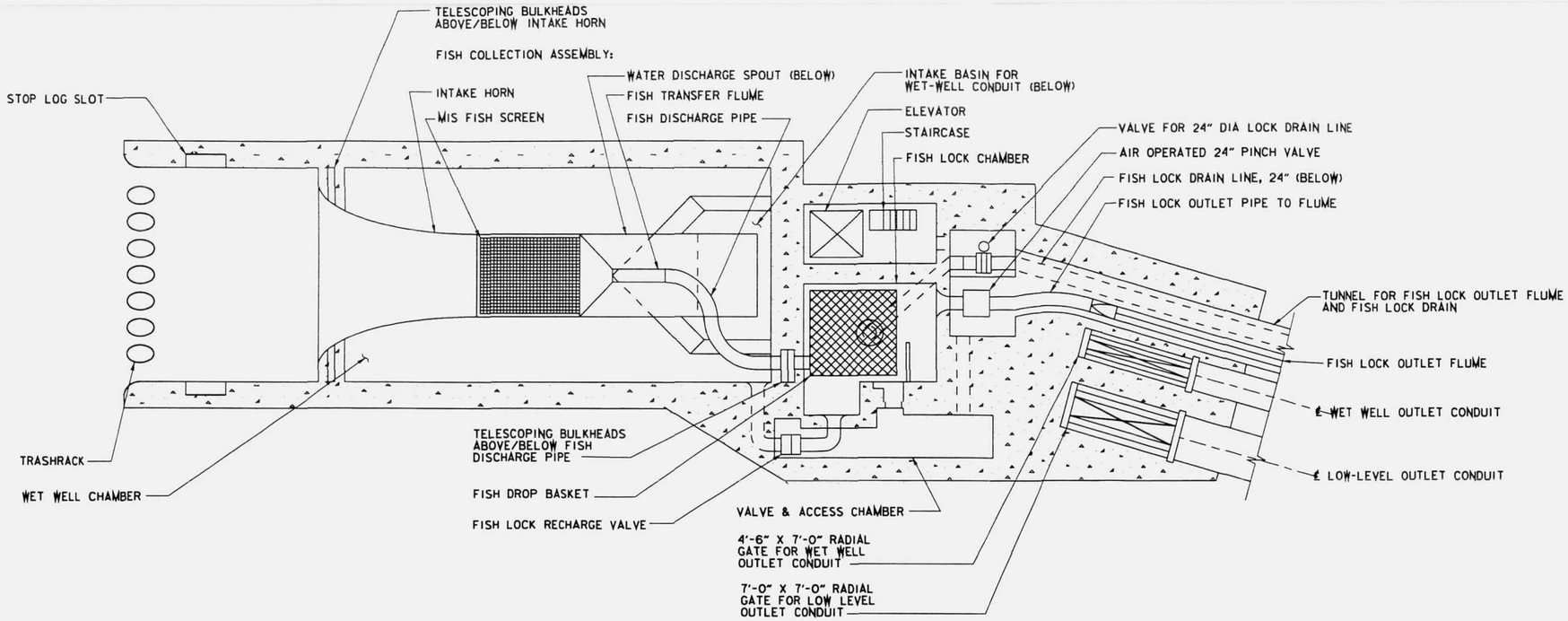

NOTE: WET WELL AND LOWER LEVEL INTAKE CONDUITS NOT SHOWN FOR CLARITY

PLAN AT EL 1040 (APPROX)

SCALE: 1" = 10'

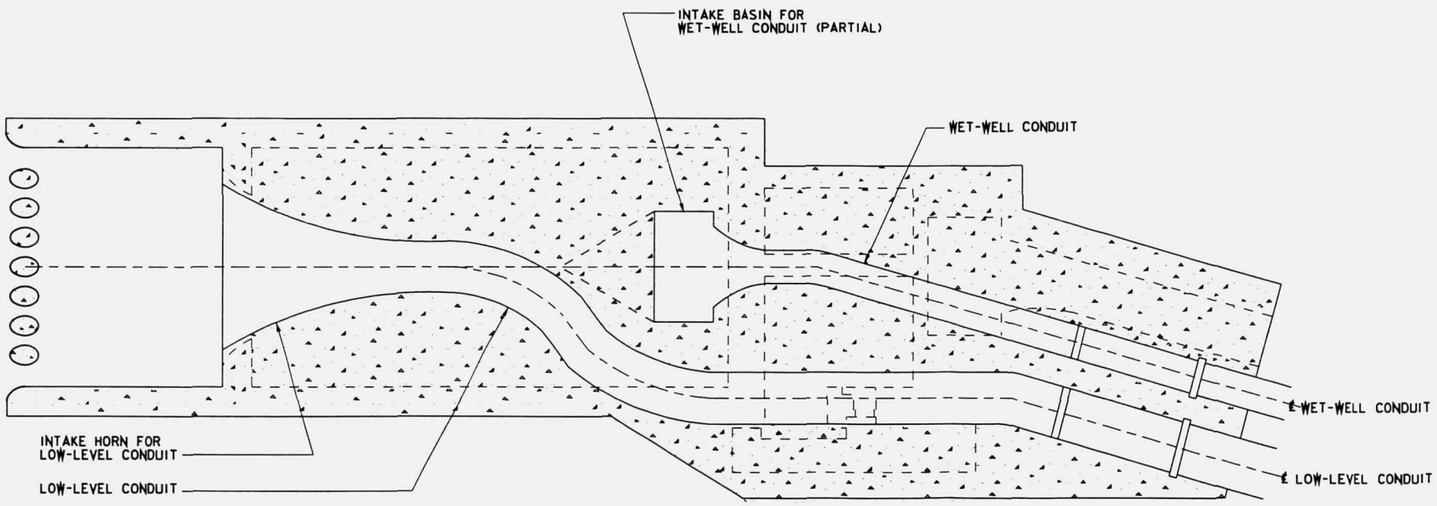

PLAN AT EL 1028 (APPROX)

SCALE: 1" = 10'

1" = 10' 10' 5' 0 10' 20'

REDUCED TO 50% OF FULL SIZE

U.S. ARMY ENGINEER DISTRICT, SEATTLE
CORPS OF ENGINEERS
SEATTLE, WASHINGTON

HOWARD HANSON DAM
ADDITIONAL WATER STORAGE PROJECT

FISH BYPASS STRUCTURE
ALTERNATE 9A5
PLAN – II

GREEN RIVER WASHINGTON

SIZE	INVITATION NO.	FILE NO.	DATE	PLATE
D		E-56-14-17	97JUL14	S.14
DSGN. FRAGOMELI		CHK.	SHEET 15 OF 50	

DATE AND TIME PLOTTED: 09-JUL-1997 11:32
DESIGN FILE: I:\designs\hhaw\str\HHAWSA0K.dgn

DESIGN FIL
DATE AND TIME PLOTTED: 09-JUL-1997 11:32
I:\designs\hhaw\str\HHAWSA0K.dgn

REVISIONS				
SYMBOL	ZONE	DESCRIPTION	DATE	BY

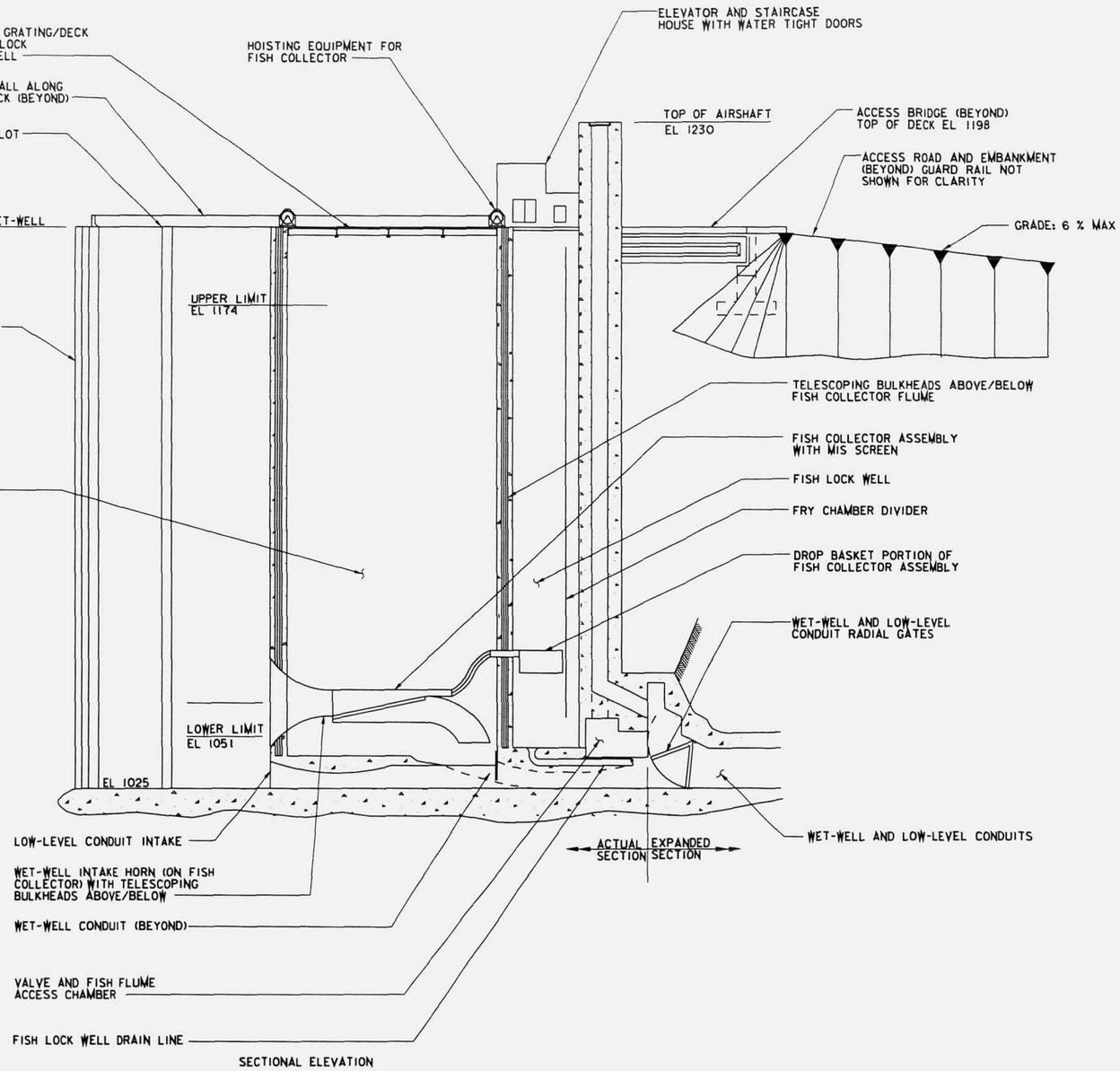

SECTIONAL ELEVATION

SECTION A S.13

SCALE: 1" = 20'

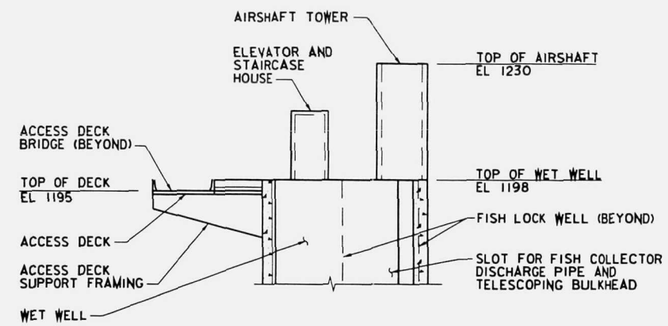

SECTION B S.13

SCALE: 1" = 20'

1" = 20' 20' 10' 0 20' 40'

REDUCED TO 50% OF FULL SIZE

U.S. ARMY ENGINEER DISTRICT, SEATTLE
CORPS OF ENGINEERS
SEATTLE, WASHINGTON

HOWARD HANSON DAM
ADDITIONAL WATER STORAGE PROJECT

FISH BYPASS STRUCTURE
ALTERNATIVE 9A5
SECTIONS

GREEN RIVER WASHINGTON

SIZE	INVITATION NO.	FILE NO.	DATE:	PLATE
D		E-56-14-17	97JUL14	S.15
DSGN. FRAGOWELI		CHK.	SHEET 16 OF 50	

DATE AND TIME PLOTTED: 09-JUL-1997 11:32
DESIGN FILE: I:\designs\hhaw\str\HHAWSAOM.dgn

DATE AND TIME PLOTTED: 09-JUL-1997 11:32
DESIGN FI ;\designs\hhaw\str\HHAWSAOM.dgn

REVISIONS				
SYMBOL	ZONE	DESCRIPTION	DATE	BY

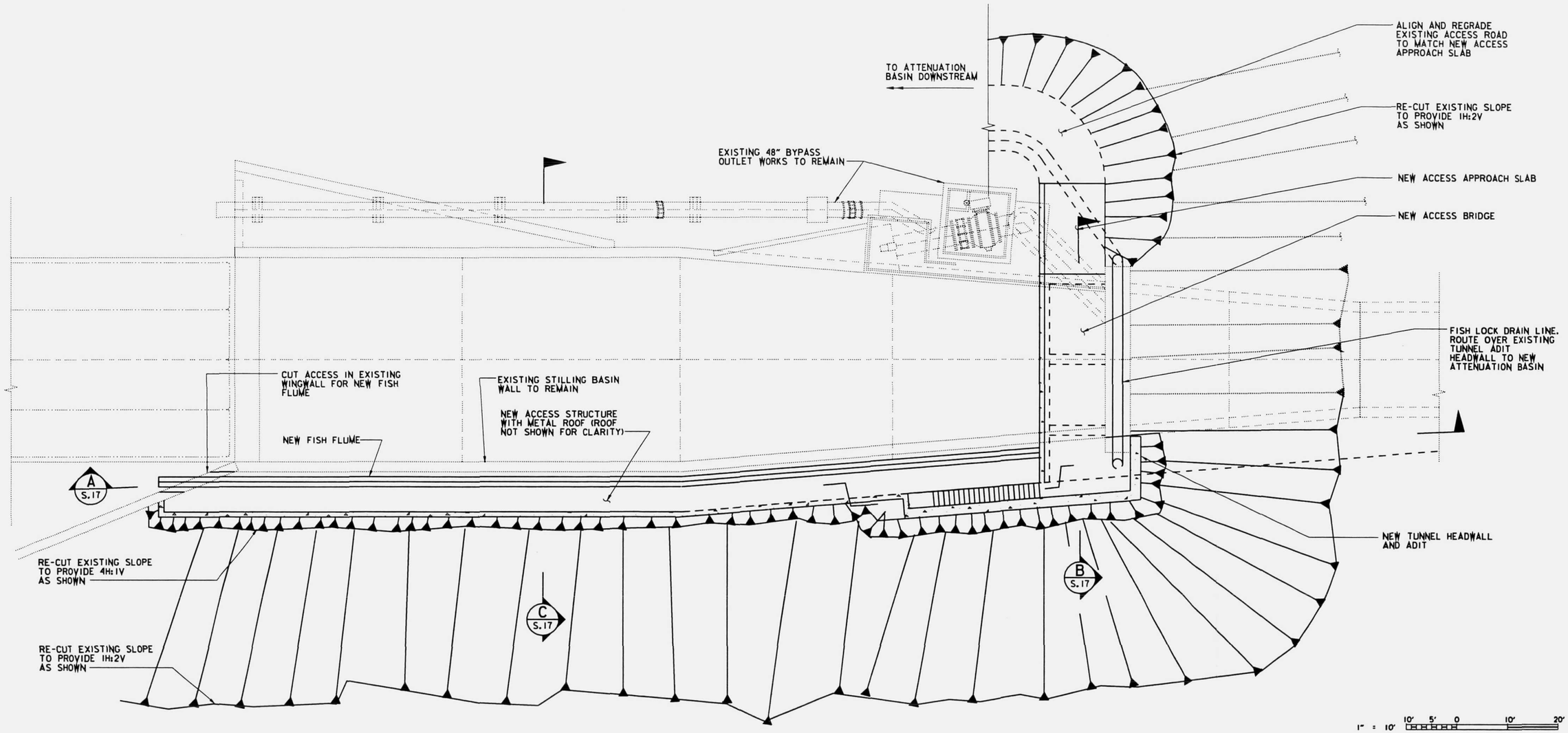

1" = 10' 10' 5' 0 10' 20'

REDUCED TO 50% OF FULL SIZE

PLAN

SCALE: 1" = 10'

U.S. ARMY ENGINEER DISTRICT, SEATTLE
CORPS OF ENGINEERS
SEATTLE, WASHINGTON

HOWARD HANSON DAM
ADDITIONAL WATER STORAGE PROJECT
FISH BYPASS STRUCTURE
ALTERNATIVE 9A5
STILLING BASIN – PLAN

GREEN RIVER WASHINGTON

SIZE	INVITATION NO.	FILE NO.	DATE	PLATE
D		E-56-14-17	97JUL 14	S.16
DSGN. FRAGOMELI		CHK.	SHEET 17 OF 50	

DATE AND TIME PLOTTED: 09-JUL-1997 11:33
DESIGN FILE: I:#designs#hhow#str#HHAWSA00.dgn

DATE AND TIME PLOTTED: 09-JUL-1997 11:33
DESIGN FIL ...designs#hhow#str#HHAWSA00.dgn

REVISIONS				
SYMBOL	ZONE	DESCRIPTION	DATE	BY

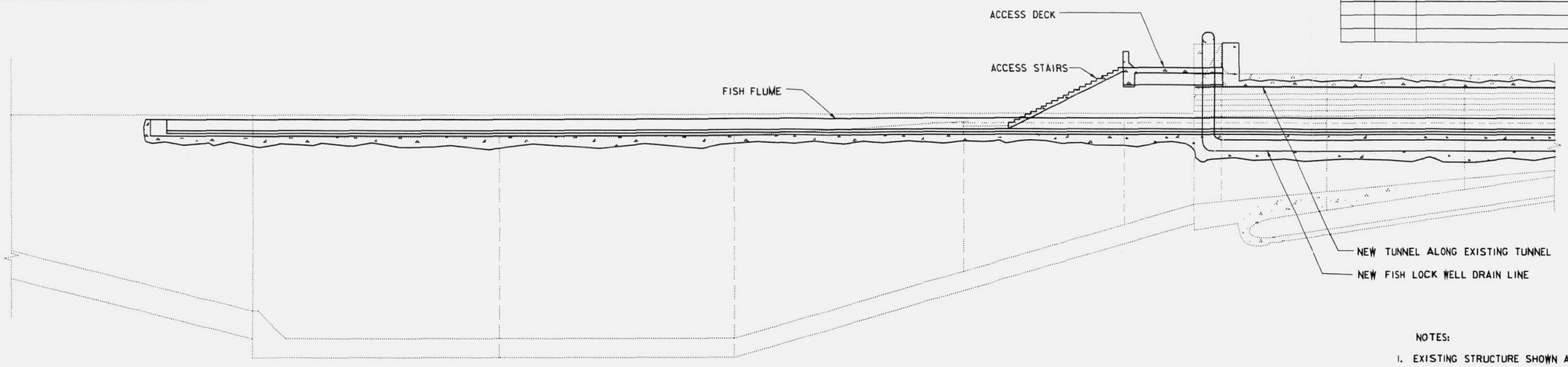

NOTES:

1. EXISTING STRUCTURE SHOWN AS HALF-TONE.

SECTION A S.16

SCALE: 1" = 10'

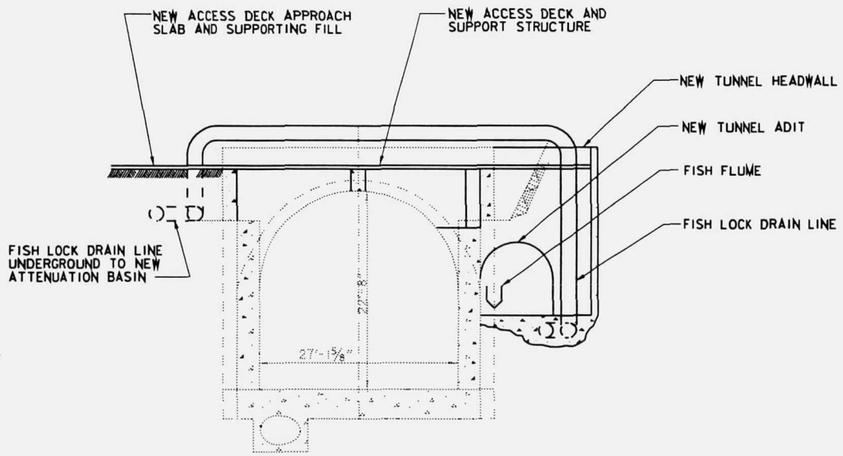

SECTION B S.16

SCALE: 1" = 10'

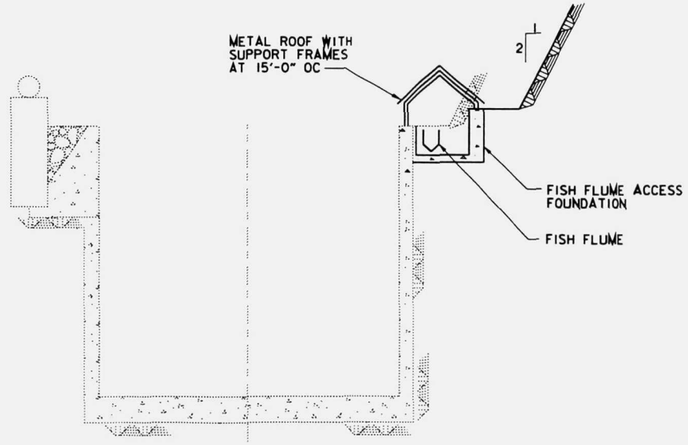

SECTION C S.16

SCALE: 1" = 10'

1" = 10' 10' 5' 0 10' 20'

REDUCED TO 50% OF FULL SIZE

U.S. ARMY ENGINEER DISTRICT, SEATTLE
CORPS OF ENGINEERS
SEATTLE, WASHINGTON

HOWARD HANSON DAM
ADDITIONAL WATER STORAGE PROJECT

FISH BYPASS STRUCTURE
ALTERNATIVE 9A5
STILLING BASIN - SECTIONS

GREEN RIVER WASHINGTON

SIZE	INVITATION NO.	FILE NO.	DATE	PLATE
D		E-56-14-17	97JUL14	S.17
DSGN. FRAGOMELI		CHK.	SHEET 18 OF 50	

DATE AND TIME PLOTTED: 09-JUL-1997 11:33
DESIGN FILE: I:\designs\hhaw\str\HHAWSA00.dgn

DATE AND TIME PLOTTED: 09-JUL-1997 11:33
DESIGN FIL ...\designs\hhaw\str\HHAWSA00.dgn

REVISIONS				
SYMBOL	ZONE	DESCRIPTION	DATE	BY

NOTE:

1. THIS ALTERNATE ALSO PROVIDES PRIMARY RESERVOIR LEVEL AND FLOOD CONTROL.

1" = 80' 40' 0 100' 200'

REDUCED TO 50% OF FULL SIZE

U.S. ARMY ENGINEER DISTRICT, SEATTLE
CORPS OF ENGINEERS
SEATTLE, WASHINGTON

HOWARD HANSON DAM
ADDITIONAL WATER STORAGE PROJECT

FISH BYPASS STRUCTURE
ALTERNATIVE 9A6
SITE PLAN

GREEN RIVER WASHINGTON

SIZE	INVITATION NO.	FILE NO.	DATE:	PLATE
D		E-56-14-17	97JUL14	S.18
DSGN: FRAGOMELI		CHK.	SHEET 19 OF 50	

DATE AND TIME PLOTTED: 09-JUL-1997 11:34
DESIGN FILE: I:\designs\hhaw\str\HHAWSAOV.dgn

DATE AND TIME PLOTTED: 09-JUL-1997 11:34
DESIGN FILE: I:\designs\hhaw\str\HHAWSAOV.dgn

REVISIONS				
SYMBOL	ZONE	DESCRIPTION	DATE	BY

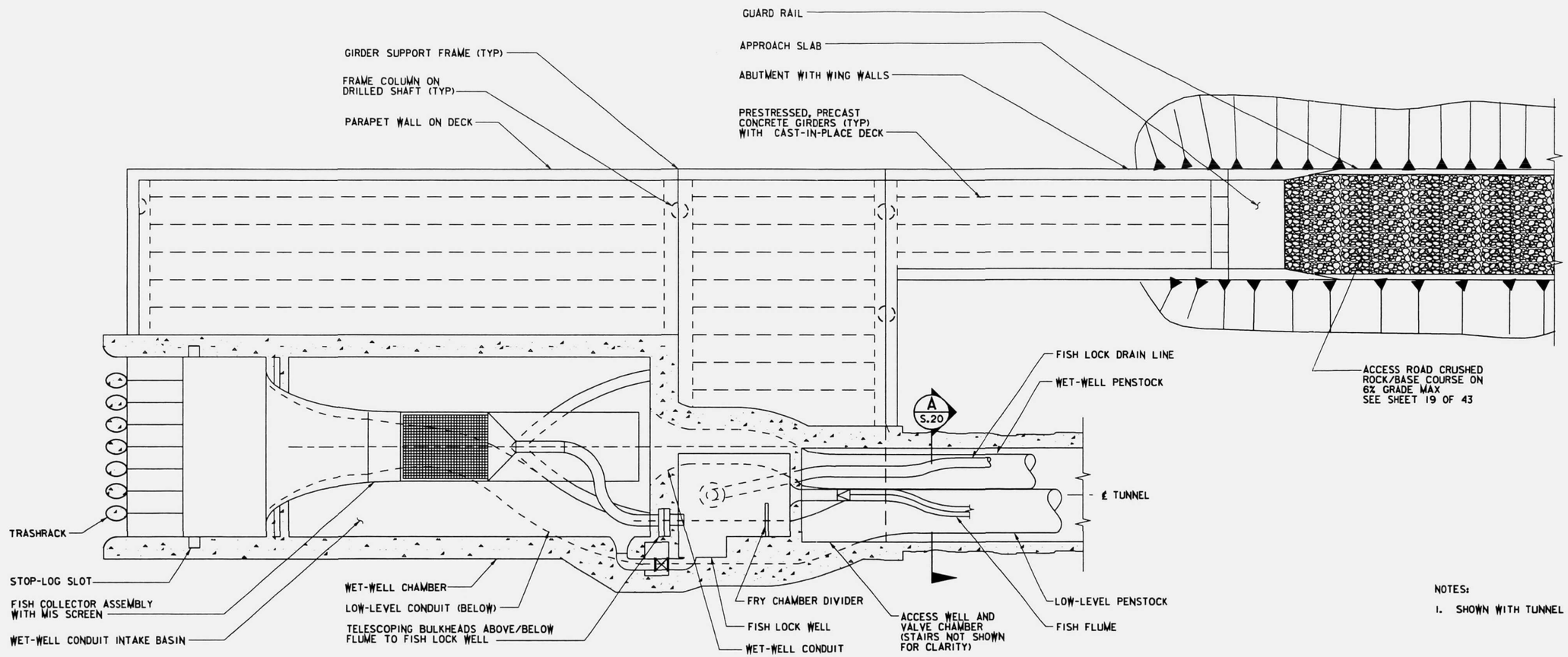

PLAN

SCALE: 1" = 10'

NOTES:

1. SHOWN WITH TUNNEL ROOF REMOVED.

1" = 5' 5' 0 5' 10'

1" = 10' 10' 5' 0 10' 20'

REDUCED TO 50% OF FULL SIZE

U.S. ARMY ENGINEER DISTRICT, SEATTLE
CORPS OF ENGINEERS
SEATTLE, WASHINGTON

HOWARD HANSON DAM
ADDITIONAL WATER STORAGE PROJECT

FISH BYPASS STRUCTURE
ALTERNATE 9A6
PLAN

GREEN RIVER WASHINGTON

SIZE	INVITATION NO.	FILE NO.	DATE	PLATE
D		E-56-14-17	97JUL14	S.19
DSGN. FRAGOWELI		CHK.	SHEET 20 OF 50	

DATE AND TIME PLOTTED: 09-JUL-1997 11:35
DESIGN FILE: I:\designs\hhaw\str\HHAWSAOS.dgn

DESIGN FILE: I:\designs\hhaw\str\HHAWSAOS.dgn
DATE AND TIME PLOTTED: 09-JUL-1997 11:35

REVISIONS				
SYMBOL	ZONE	DESCRIPTION	DATE	BY

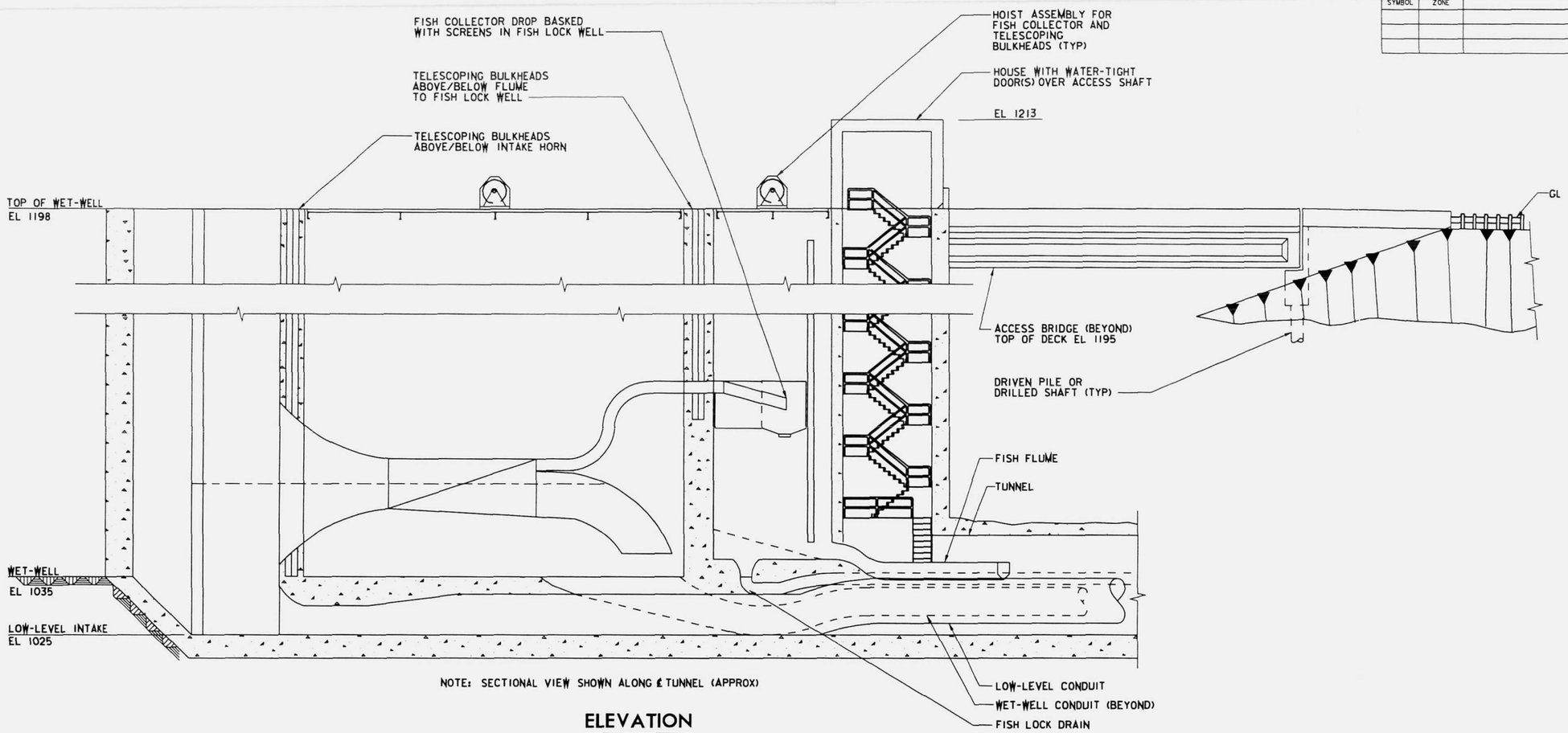

NOTE: SECTIONAL VIEW SHOWN ALONG ℄ TUNNEL (APPROX)

ELEVATION

SCALE: 1" = 10'

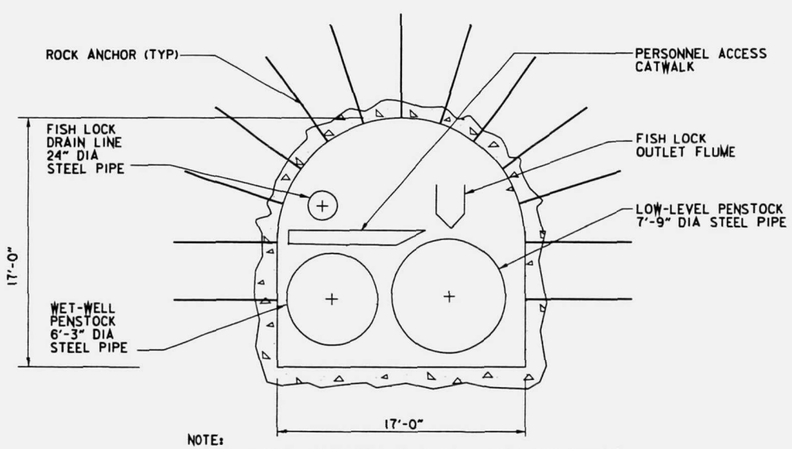

NOTE:
TYPICAL TUNNEL CROSS-SECTION SHOWN LOOKING DOWNSTREAM.
PENSTOCK SADDLES NOT SHOWN FOR CLARITY.

SECTION

SCALE: 1" = 5'

A
S.19

1" = 5' 5' 0 5' 10'

1" = 10' 10' 5' 0 10' 20'

REDUCED TO 50% OF FULL SIZE

U.S. ARMY ENGINEER DISTRICT, SEATTLE
CORPS OF ENGINEERS
SEATTLE, WASHINGTON

HOWARD HANSON DAM
ADDITIONAL WATER STORAGE PROJECT
FISH BYPASS STRUCTURE
ALTERNATE 9A6
ELEVATION AND SECTION

GREEN RIVER WASHINGTON

SIZE	INVITATION NO.	FILE NO.	DATE	PLATE
D		E-56-14-17	97JUL14	S.20
DSGN. FRAGOMELI		CHK.	SHEET 21 OF 50	

DATE AND TIME PLOTTED: 09-JUL-1997 11:35
DESIGN FILE: I:\designs\hhaw\str\HHAWSA02.dgn

DATE AND TIME PLOTTED: 09-JUL-1997 11:35
DESIGN FI :\designs\hhaw\str\HHAWSA02.dgn

REVISIONS				
SYMBOL	ZONE	DESCRIPTION	DATE	BY

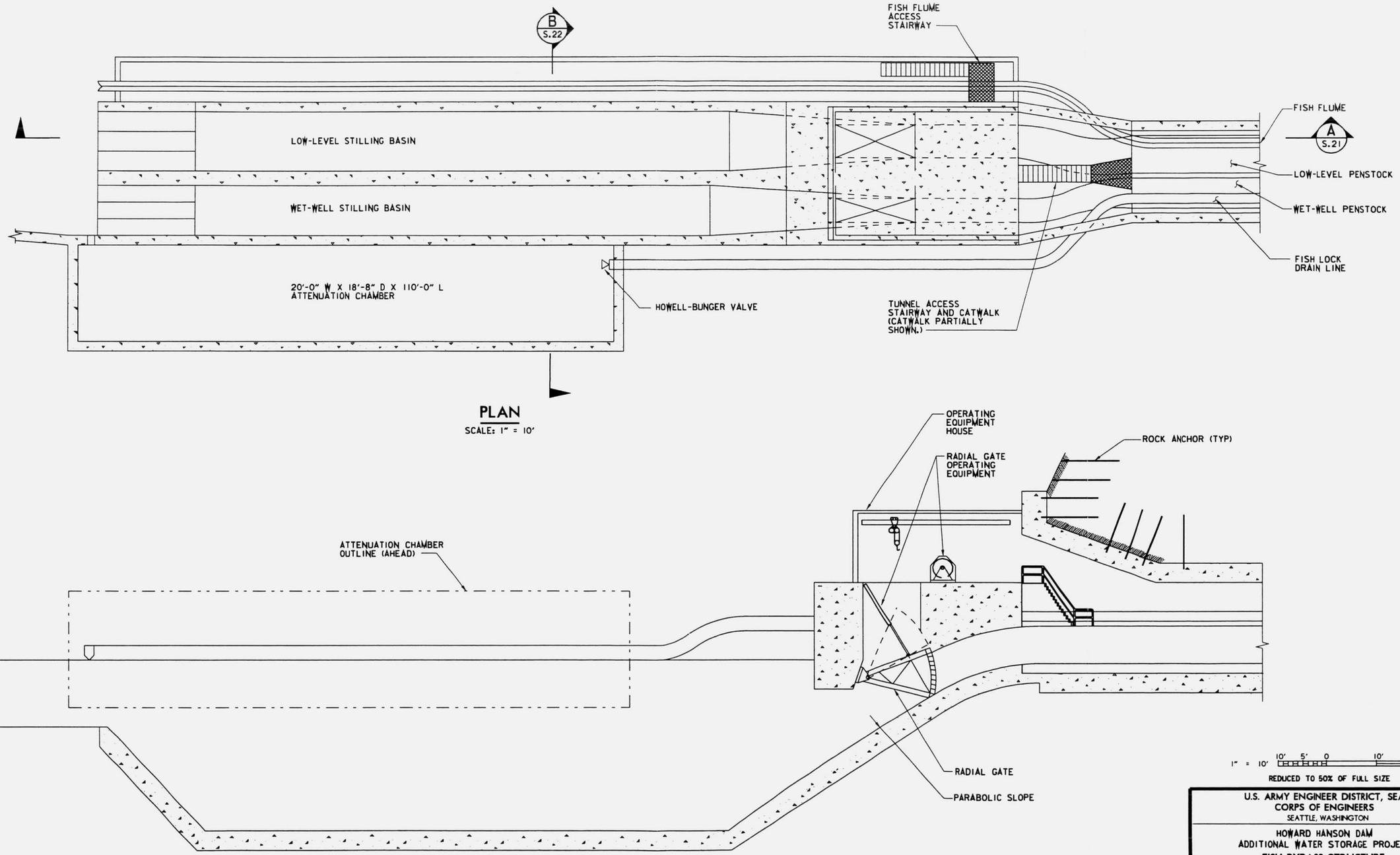

PLAN
SCALE: 1" = 10'

SECTION A S.21
SCALE: 1" = 10'

1" = 10' 10' 5' 0 10' 20'
REDUCED TO 50% OF FULL SIZE

U.S. ARMY ENGINEER DISTRICT, SEATTLE
CORPS OF ENGINEERS
SEATTLE, WASHINGTON

HOWARD HANSON DAM
ADDITIONAL WATER STORAGE PROJECT
FISH BYPASS STRUCTURE
ALTERNATE 9A6
STILLING BASIN - PLAN AND SECTION

GREEN RIVER WASHINGTON

SIZE	INVITATION NO.	FILE NO.	DATE:	PLATE
D		E-56-14-17	97JUL14	S.21
DSGN. FRAGOWELI		CHK.	SHEET 22 OF 50	

DATE AND TIME PLOTTED: 09-JUL-1997 11:37
DESIGN FILE: I:\designs\hhaw\str\HHAWSAOT.dgn

DATE AND TIME PLOTTED: 09-JUL-1997 11:37 DESIGN FIL \designs\hhaw\str\HHAWSAOT.dgn

REVISIONS				
SYMBOL	ZONE	DESCRIPTION	DATE	BY

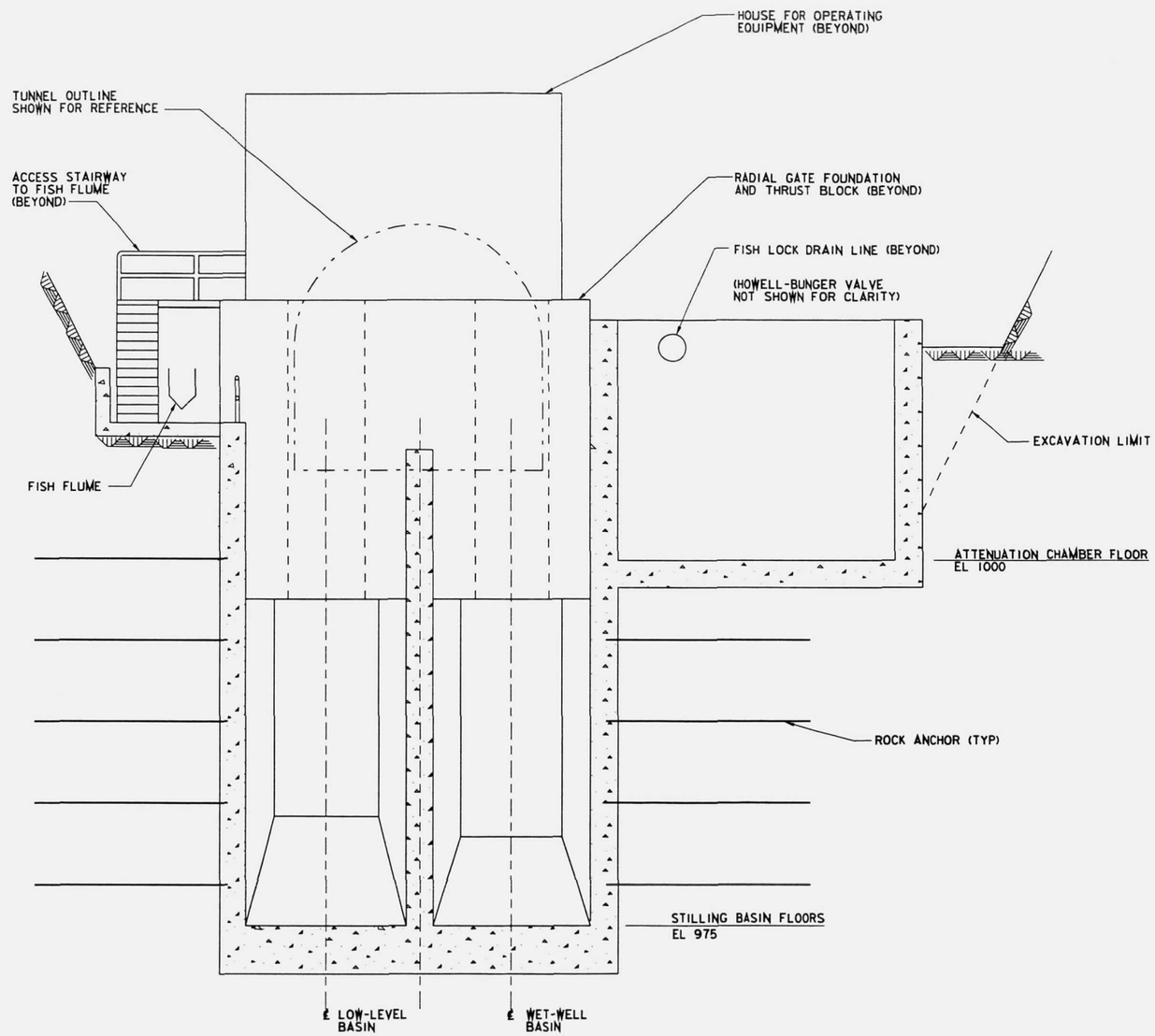

SECTION B / S.21

SCALE: 1" = 5'

1" = 5' 5' 0 5' 10'

REDUCED TO 50% OF FULL SIZE

U.S. ARMY ENGINEER DISTRICT, SEATTLE
CORPS OF ENGINEERS
SEATTLE, WASHINGTON

HOWARD HANSON DAM
ADDITIONAL WATER STORAGE PROJECT
FISH BYPASS STRUCTURE
ALTERNATE 9A6
STILLING BASIN - SECTION

GREEN RIVER WASHINGTON

SIZE	INVITATION NO.	FILE NO.	DATE	PLATE
D		E-56-14-17	97JUL14	S.22
DSGN. FRAGOWELI		CHK.	SHEET 23 OF 50	

DATE AND TIME PLOTTED: 09-JUL-1997 11:37
DESIGN FILE: I:\designs\hhaw\str\HHAWSA1A.dgn

DATE AND TIME PLOTTED: 09-JUL-1997 11:37
DESIGN FILE: I:\designs\hhaw\str\HHAWSA1A.dgn

REVISIONS				
SYMBOL	ZONE	DESCRIPTION	DATE	BY

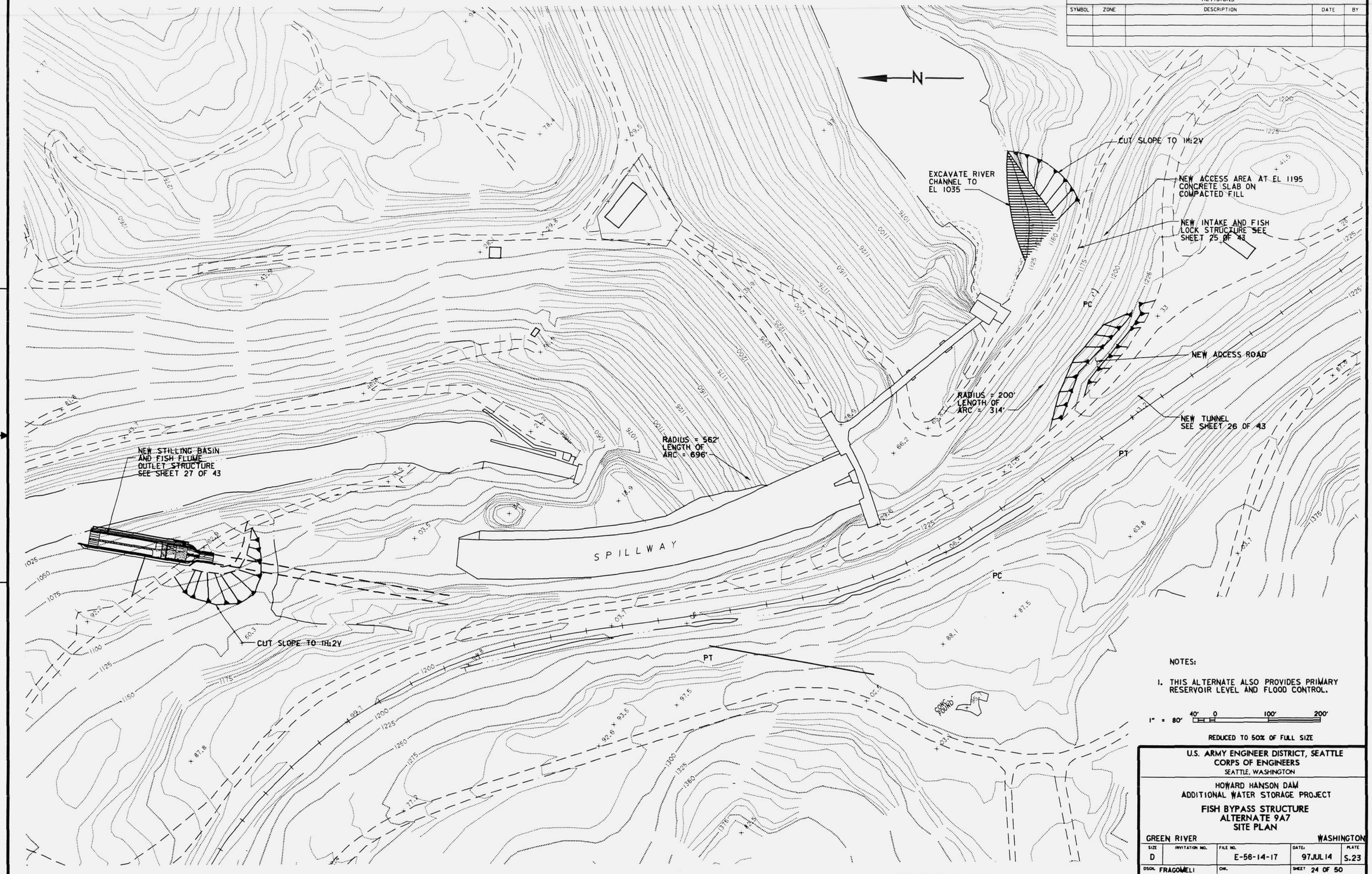

NOTES:

1. THIS ALTERNATE ALSO PROVIDES PRIMARY RESERVOIR LEVEL AND FLOOD CONTROL.

1" = 80' 40' 0 100' 200'

REDUCED TO 50% OF FULL SIZE

U.S. ARMY ENGINEER DISTRICT, SEATTLE
CORPS OF ENGINEERS
SEATTLE, WASHINGTON

HOWARD HANSON DAM
ADDITIONAL WATER STORAGE PROJECT

FISH BYPASS STRUCTURE
ALTERNATE 9A7
SITE PLAN

GREEN RIVER WASHINGTON

SIZE	INVITATION NO.	FILE NO.	DATE:	PLATE
D		E-56-14-17	97JUL14	S.23
DSGN. FRAGOMELI		CHK.	SHEET 24 OF 50	

DATE AND TIME PLOTTED: 09-JUL-1997 11:38
DESIGN FILE: I:\designs\hhaw\str\HHAWSAOY.dgn

DATE AND TIME PLOTTED: 09-JUL-1997 11:38
DESIGN FI :\designs\hhaw\str\HHAWSAOY.dgn

REVISIONS				
SYMBOL	ZONE	DESCRIPTION	DATE	BY

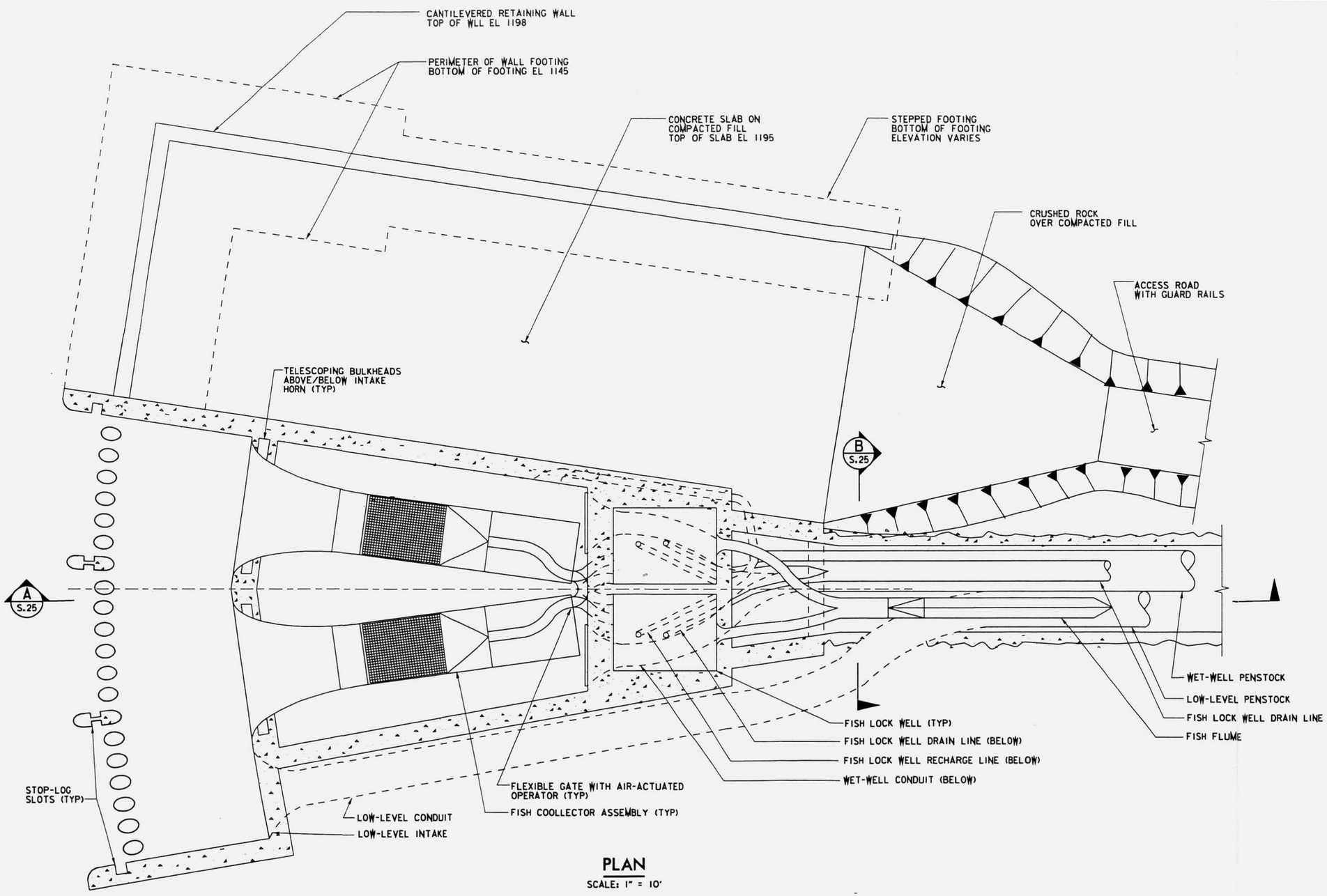

PLAN

SCALE: 1" = 10'

1" = 10' 10' 5' 0 10' 20'

REDUCED TO 50% OF FULL SIZE

U.S. ARMY ENGINEER DISTRICT, SEATTLE
CORPS OF ENGINEERS
SEATTLE, WASHINGTON

HOWARD HANSON DAM
ADDITIONAL WATER STORAGE PROJECT

FISH BYPASS STRUCTURE
ALTERNATE 9A7
PLAN

GREEN RIVER WASHINGTON

SIZE	INVITATION NO.	FILE NO.	DATE:	PLATE
D		E-56-14-17	97JUL14	S.24
DSGN. FRAGOMELI		CHK.	SHEET 25 OF 50	

DATE AND TIME PLOTTED: 09-JUL-1997 11:39
DESIGN FILE: I:#designs#hhaw#str#HHAWSAOW.dgn

DATE AND TIME PLOTTED: 09-JUL-1997 11:39
DESIGN FILE: I:#designs#hhaw#str#HHAWSAOW.dgn

REVISIONS				
SYMBOL	ZONE	DESCRIPTION	DATE	BY

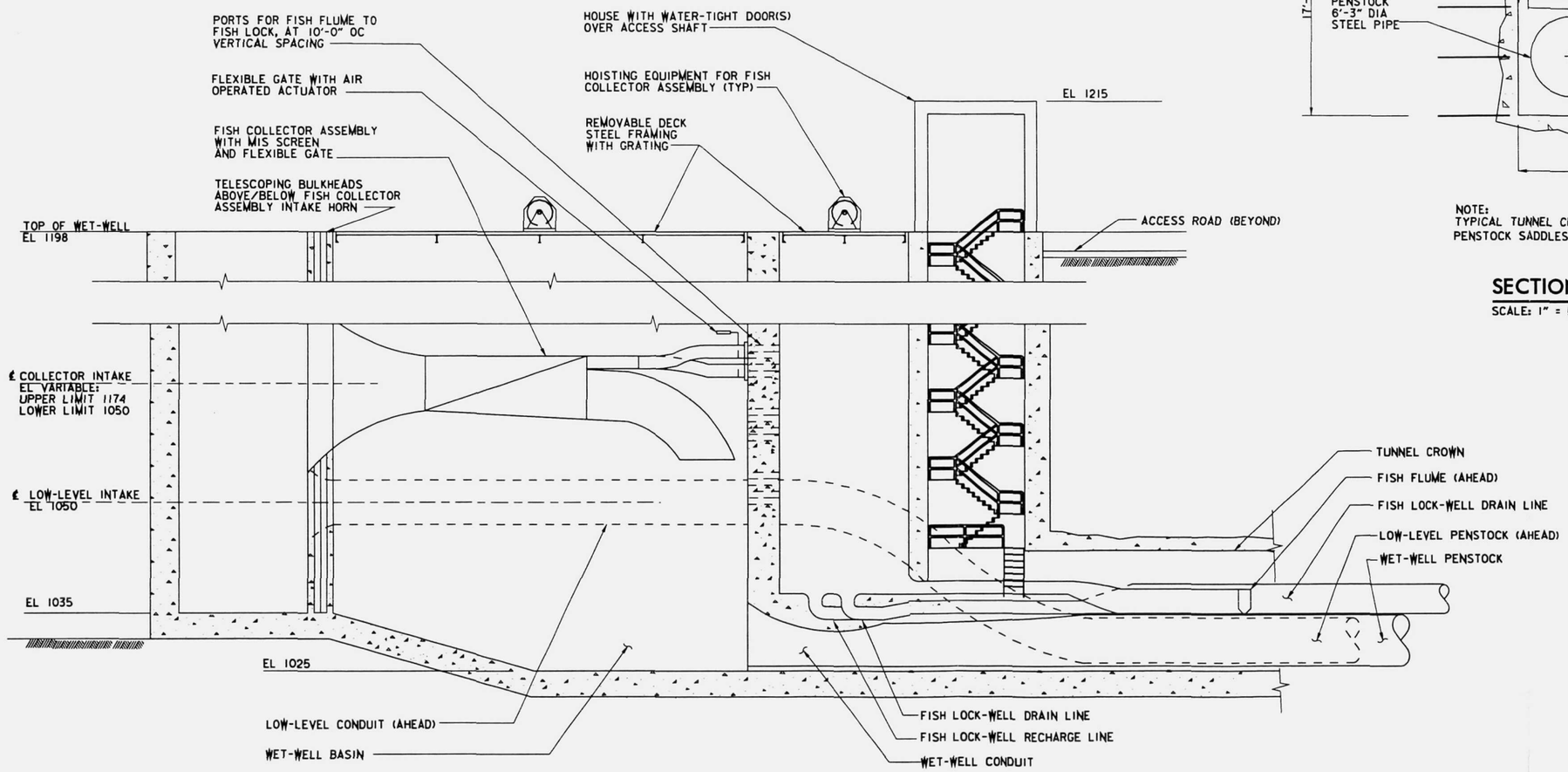

SECTION A S.24

SCALE: 1" = 10'

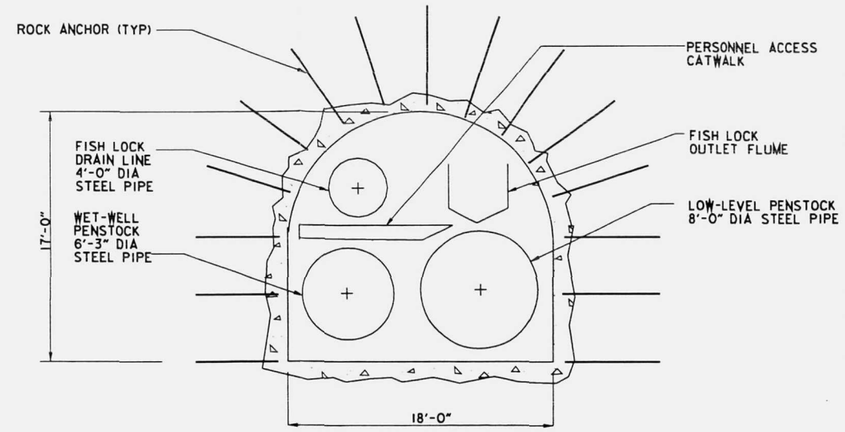

NOTE:
TYPICAL TUNNEL CROSS-SECTION SHOWN LOOKING DOWNSTREAM
PENSTOCK SADDLES NOT SHOWN FOR CLARITY

SECTION B S.24

SCALE: 1" = 5'

1" = 5' 5' 0 5' 10'

1" = 10' 10' 5' 0 10' 20'

REDUCED TO 50% OF FULL SIZE

U.S. ARMY ENGINEER DISTRICT, SEATTLE
CORPS OF ENGINEERS
SEATTLE, WASHINGTON

HOWARD HANSON DAM
ADDITIONAL WATER STORAGE PROJECT

FISH BYPASS STRUCTURE
ALTERNATE 9A7
SECTIONS

GREEN RIVER WASHINGTON

SIZE	INVITATION NO.	FILE NO.	DATE	PLATE
D		E-56-14-17	97JUL14	S.25
DSGN. FRAGOMELI		CHK.	SHEET 26 OF 50	

DATE AND TIME PLOTTED: 09-JUL-1997 11:40
DESIGN FILE: I:\designs\hhaw\str\HHAWSAOU.dgn

DATE AND TIME PLOTTED: 09-JUL-1997 11:40
DESIGN FIL: I:\designs\hhaw\str\HHAWSAOU.dgn

REVISIONS				
SYMBOL	ZONE	DESCRIPTION	DATE	BY

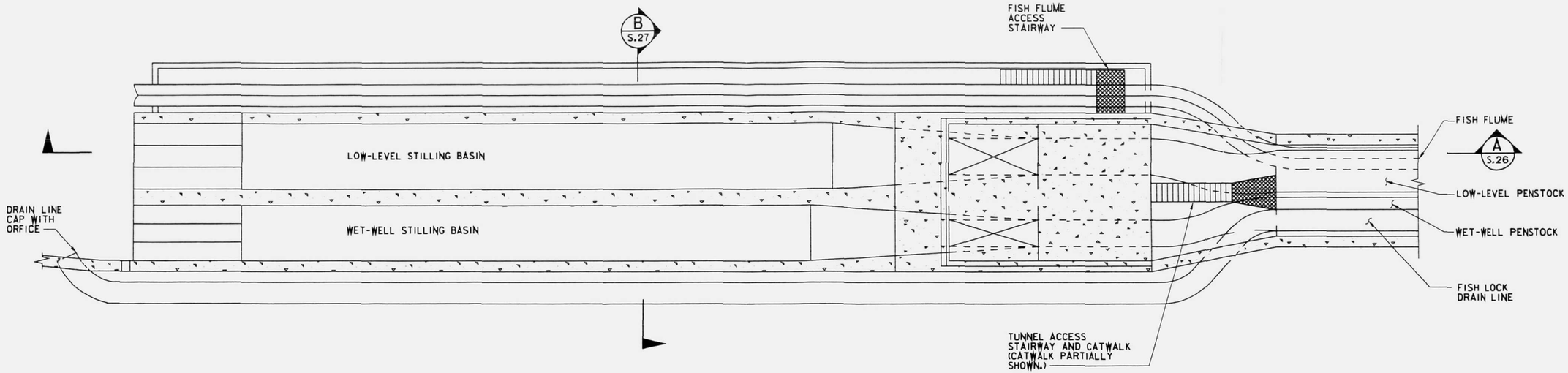

PLAN

SCALE: 1" = 10'

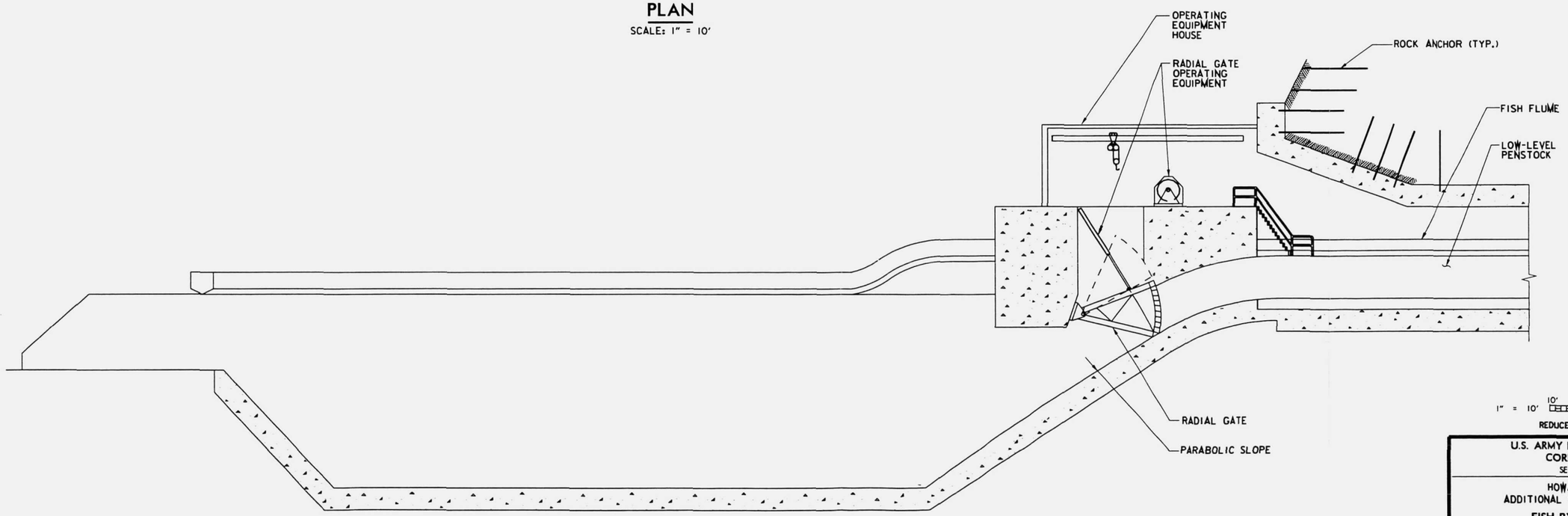

SECTION A S.26

SCALE: 1" = 10'

1" = 10' 10' 5' 0 10' 20'

REDUCED TO 50% OF FULL SIZE

U.S. ARMY ENGINEER DISTRICT, SEATTLE
CORPS OF ENGINEERS
SEATTLE, WASHINGTON

HOWARD HANSON DAM
ADDITIONAL WATER STORAGE PROJECT

FISH BYPASS STRUCTURE
ALTERNATE 9A7
STILLING BASIN - PLAN AND SECTION

GREEN RIVER WASHINGTON

SIZE	INVITATION NO.	FILE NO.	DATE:	PLATE
D		E-56-14-17	97JUL14	S.26
DSGN. FRAGOMELI		CHK.	SHEET 27 OF 50	

Computer Aided Design & Drafting

DATE AND TIME PLOTTED: 09-JUL-1997 11:40
DESIGN FILE: I:#designs#hhaw#str#HHAWSAID.dgn

DATE AND TIME PLOTTED: 09-JUL-1997 11:40
DESIGN FILE: I:#designs#hhaw#str#HHAWSAID.dgn

REVISIONS				
SYMBOL	ZONE	DESCRIPTION	DATE	BY

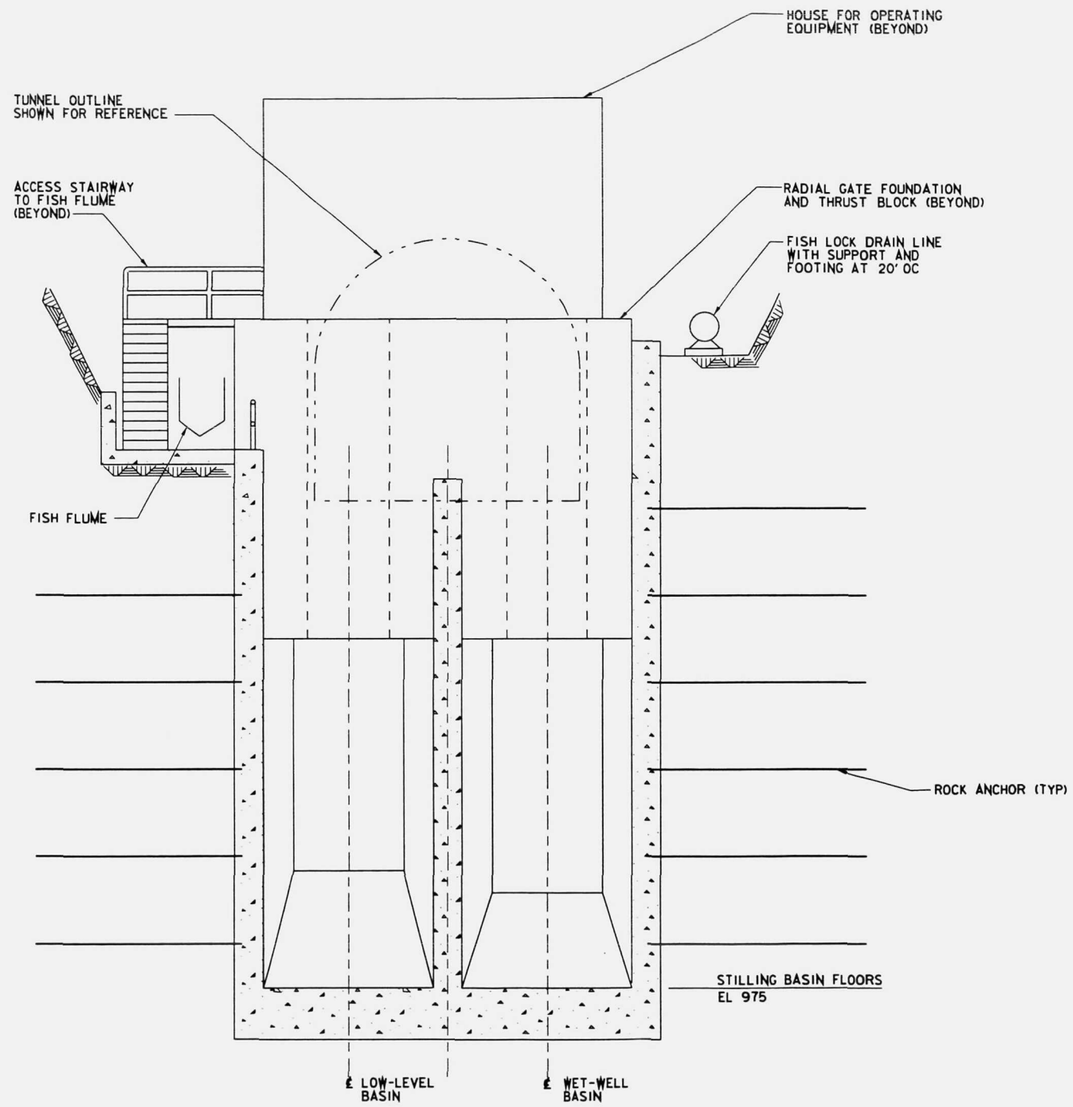

SECTION B / S.26

SCALE: 1" = 5'

1" = 5' 5' 0 5' 10'

REDUCED TO 50% OF FULL SIZE

U.S. ARMY ENGINEER DISTRICT, SEATTLE
CORPS OF ENGINEERS
SEATTLE, WASHINGTON

HOWARD HANSON DAM
ADDITIONAL WATER STORAGE PROJECT
FISH BYPASS STRUCTURE
ALTERNATE 9A7
STILLING BASIN – SECTION

GREEN RIVER WASHINGTON

SIZE	INVITATION NO.	FILE NO.	DATE	PLATE
D		E-56-14-17	97JUL14	S.27
DSGN. FRAGOWELI		CHK.	SHEET 28 OF 50	

DATE AND TIME PLOTTED: 09-JUL-1997 11:41
DESIGN FILE: I:#designs#hhaw#str#HHAWSAIE.dgn

DATE AND TIME PLOTTED: 09-JUL-1997 11:41
DESIGN FILE: I:#designs#hhaw#str#HHAWSAIE.dgn

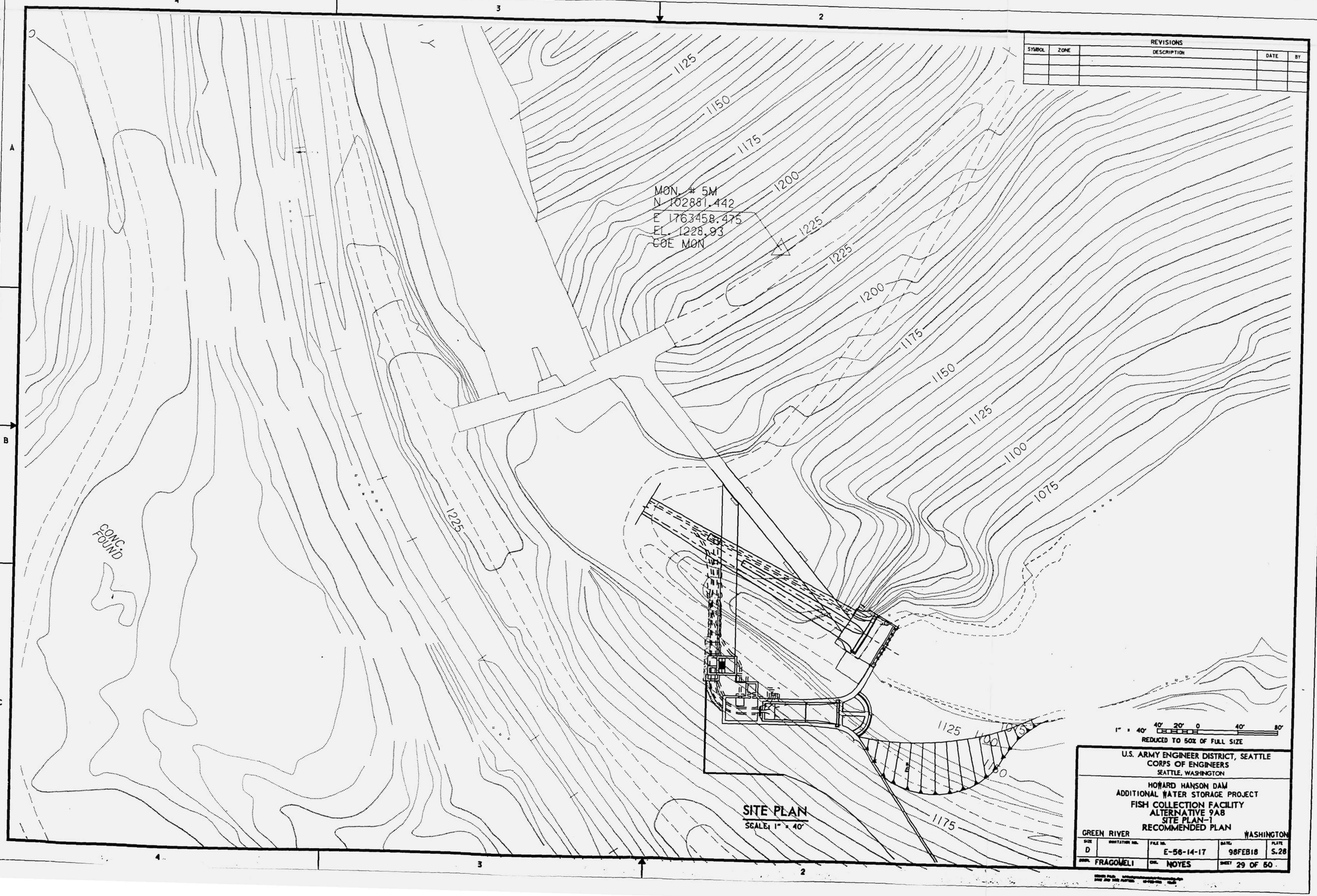

SITE PLAN
SCALE: 1" = 40'

1" = 40' 40' 20' 0 40' 80'
REDUCED TO 50% OF FULL SIZE

REVISIONS				
SYMBOL	ZONE	DESCRIPTION	DATE	BY

U.S. ARMY ENGINEER DISTRICT, SEATTLE
CORPS OF ENGINEERS
SEATTLE, WASHINGTON

HOWARD HANSON DAM
ADDITIONAL WATER STORAGE PROJECT
FISH COLLECTION FACILITY
ALTERNATIVE 9A8
SITE PLAN-1
RECOMMENDED PLAN

GREEN RIVER WASHINGTON

SIZE	INVITATION NO.	FILE NO.	DATE	PLATE
D		E-56-14-17	98FEB18	S.28
DSGN. FRAGOMELI		CHK. NOYES	SHEET 29 OF 50	

DATE AND TIME PLOTTED: 18-FEB-1998 13:31 DESIGN FILE: signsøhhawøstrøhhawse0g.dgn

REVISIONS				
SYMBOL	ZONE	DESCRIPTION	DATE	BY

24" FISH TRANSPORT PIPE. EXTEND ALONG TUNNEL CROWN TO STILLING BASING

CONNECT NEW 4'-0" BYPASS PIPE TO EXISTING 4'-0" PIPE

NEW CONDUIT COVERGENCE TO EXISTING TUNNEL

NEW 4'-0" BYPASS (BELOW CONDUIT)

NEW CONDUIT

ACCESS SHAFT AND UTILITY CHASE. TOP OF STRUCTURE IS EL 1254 (APPROX)

AIR VENT SHAFT

EMERGENCY CLOSURE GATE SLOT

24" FISH TRANSPORT PIPE

EXISTING ACCESS ROAD TO 1140' DECK

RECONSTRUCT EXISTING ACCESS DECK

℄ EXISTING INTAKE TOWER AND TUNNEL

NEW COFFERDAM ABUTMENT TO REMAIN

FLOATING TRASHRACK

℄ WET-WELL STRUCTURE

EL 1035

LIMIT OF FOREBAY BASE (EL 1035)

FISH LOCK FLOATING WEIR REMOVABLE STOPLOG FISH LOCK REGULATION WELL

FLOATING FISH COLLECTOR WITH MODULAR INCLINED SCREEN (MIS)

WET-WELL STRUCTURE REMOVABLE STOPLOG

RETAINING WALL (TYP)

MAINTENANCE AND ACCESS PLATFORM

3V:1H

1075

1125

1100

1050

1150

1175

PLAN

SCALE: 1" = 20'

MAY NEED RETAINING WALL ALONG HERE

RETAINING WALL

NEW ACCESS ROAD EL 1185

1" = 20' 20' 10' 0 20' 40'

REDUCED TO 50% OF FULL SIZE

U.S. ARMY ENGINEER DISTRICT, SEATTLE
CORPS OF ENGINEERS
SEATTLE, WASHINGTON

HOWARD HANSON DAM
ADDITIONAL WATER STORAGE PROJECT
FISH COLLECTION FACILITY
ALTERNATIVE 9A8
SITE PLAN-2
RECOMMENDED PLAN

GREEN RIVER WASHINGTON

SIZE	SOLICITATION NO.	FILE NO.	DATE	PLATE
D		E-58-14-17	98FEB18	S.29
DRGN. FRAGOMELI		CHK. NOYES	SHEET 30 OF 50	

DESIGN FILE: signsfhhowsstr/hhowse0a.dgn

DATE AND TIME PLOTTED: 18-FEB-1998 13:19

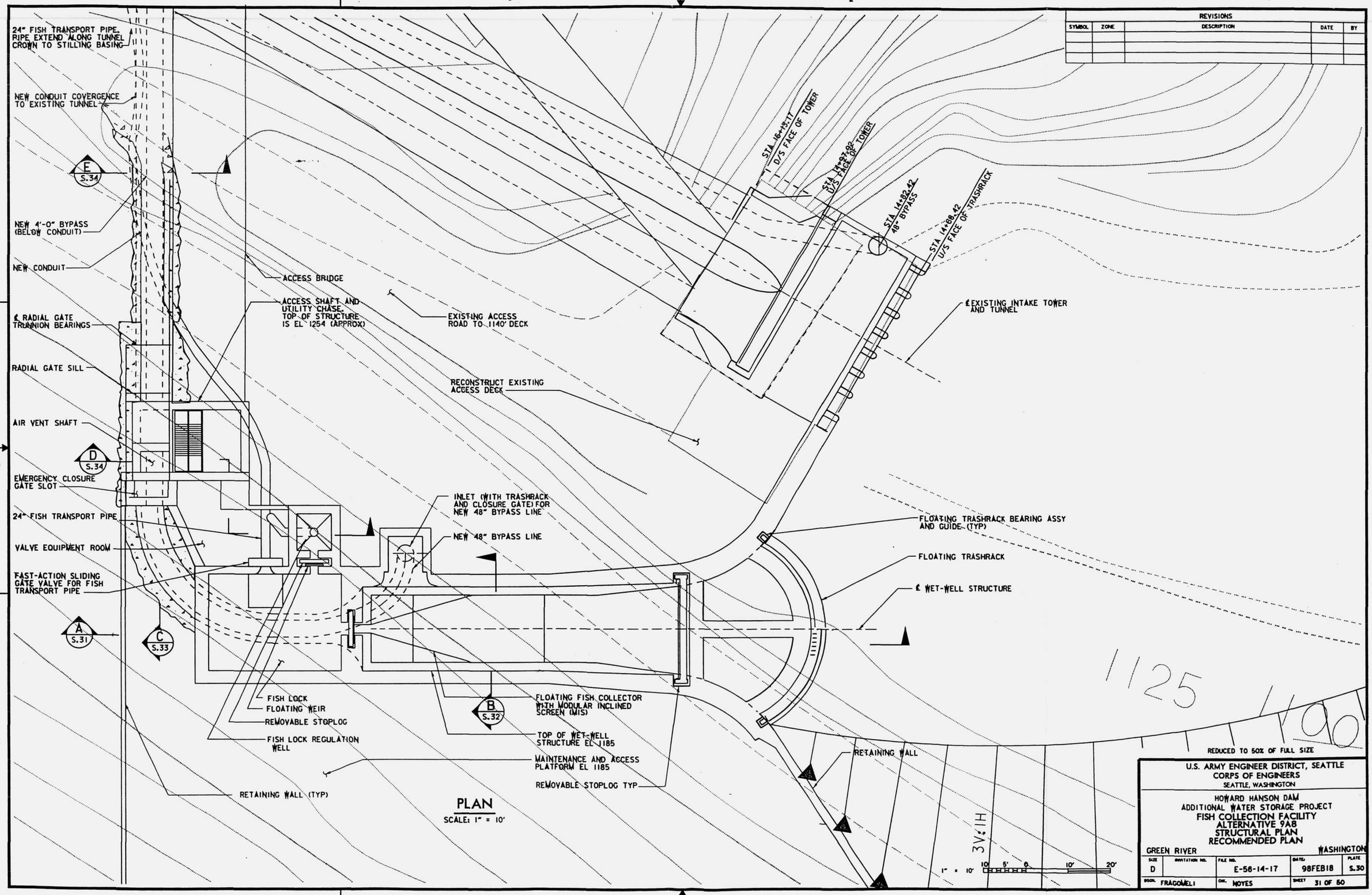

PLAN
SCALE: 1" = 10'

REVISIONS

SYMBOL	ZONE	DESCRIPTION	DATE	BY

REDUCED TO 50% OF FULL SIZE

U.S. ARMY ENGINEER DISTRICT, SEATTLE
CORPS OF ENGINEERS
SEATTLE, WASHINGTON

HOWARD HANSON DAM
ADDITIONAL WATER STORAGE PROJECT
FISH COLLECTION FACILITY
ALTERNATIVE 9A8
STRUCTURAL PLAN
RECOMMENDED PLAN

GREEN RIVER WASHINGTON

SIZE	INVITATION NO.	FILE NO.	DATE	PLATE
D		E-56-14-17	98FEB18	S.30
DSGN. FRAGOMELI		CHK. NOYES	SHEET 31 OF 50	

DATE AND TIME PLOTTED: 18-FEB-1998 13:08 DESIGN FILE designs#hhaw#str#hhawse0b.dgn

REVISIONS				
SYMBOL	ZONE	DESCRIPTION	DATE	BY

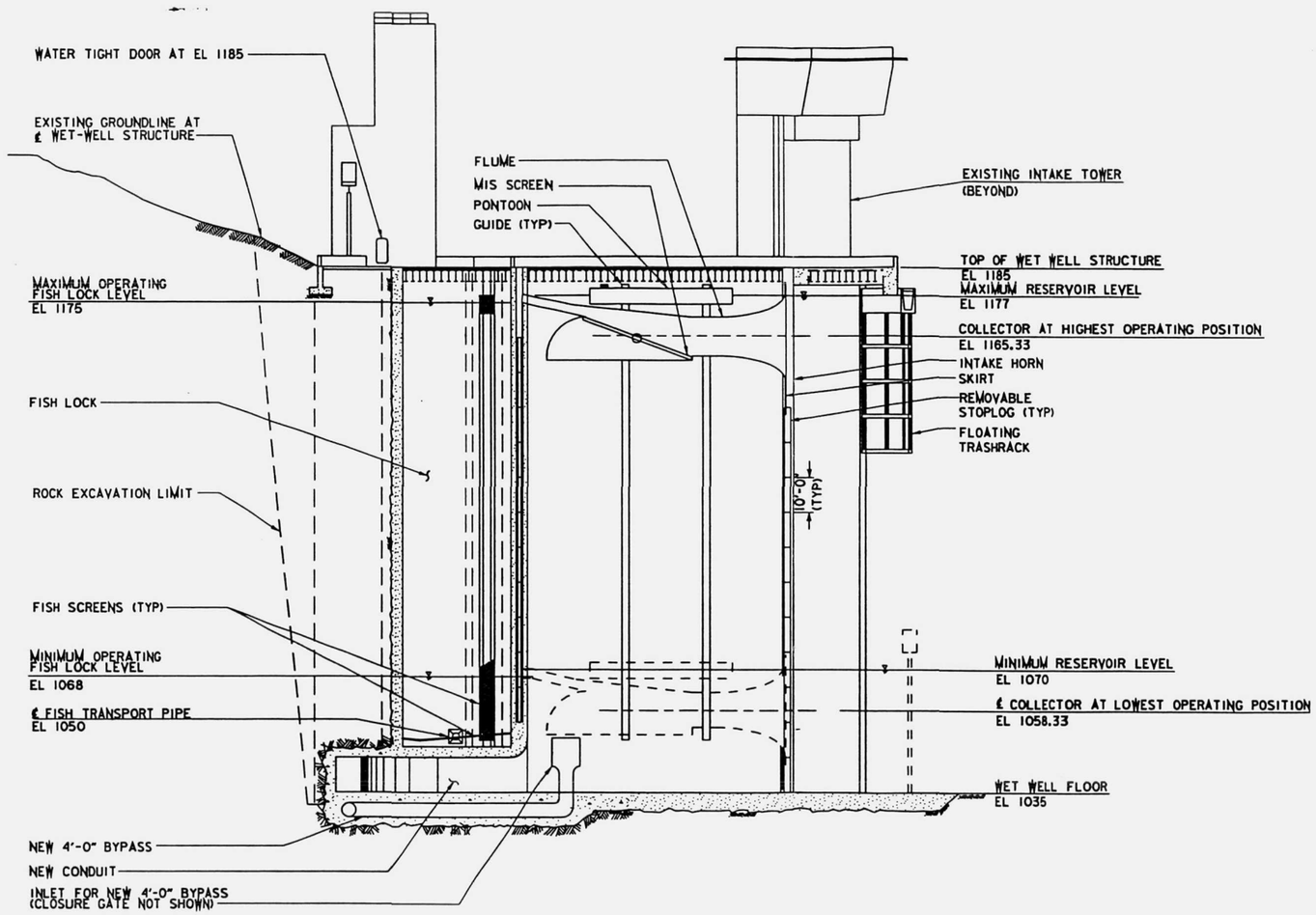

SECTION A S.30

SCALE: 1" = 20'

1" = 20' 20' 10' 0 20' 40'

REDUCED TO 50% OF FULL SIZE

U.S. ARMY ENGINEER DISTRICT, SEATTLE
CORPS OF ENGINEERS
SEATTLE, WASHINGTON

HOWARD HANSON DAM
ADDITIONAL WATER STORAGE PROJECT
FISH COLLECTION FACILITY
ALTERNATIVE 9A8
WET-WELL STRUCTURE
SECTION ALONG CENTERLINE
GREEN RIVER WASHINGTON

SIZE	INVITATION NO.	FILE NO.	DATE	PLATE
D		E-56-14-17	98FEB18	S.31
DSGN. FRAGOMELI		CK. NOYES	SHEET 32 OF 50	

DATE AND TIME PLOTTED: 18-FEB-1998 11:44
DESIGN FILE: l:\designs\hhow\str\hhowse0c.dgn

REVISIONS				
SYMBOL	ZONE	DESCRIPTION	DATE	BY

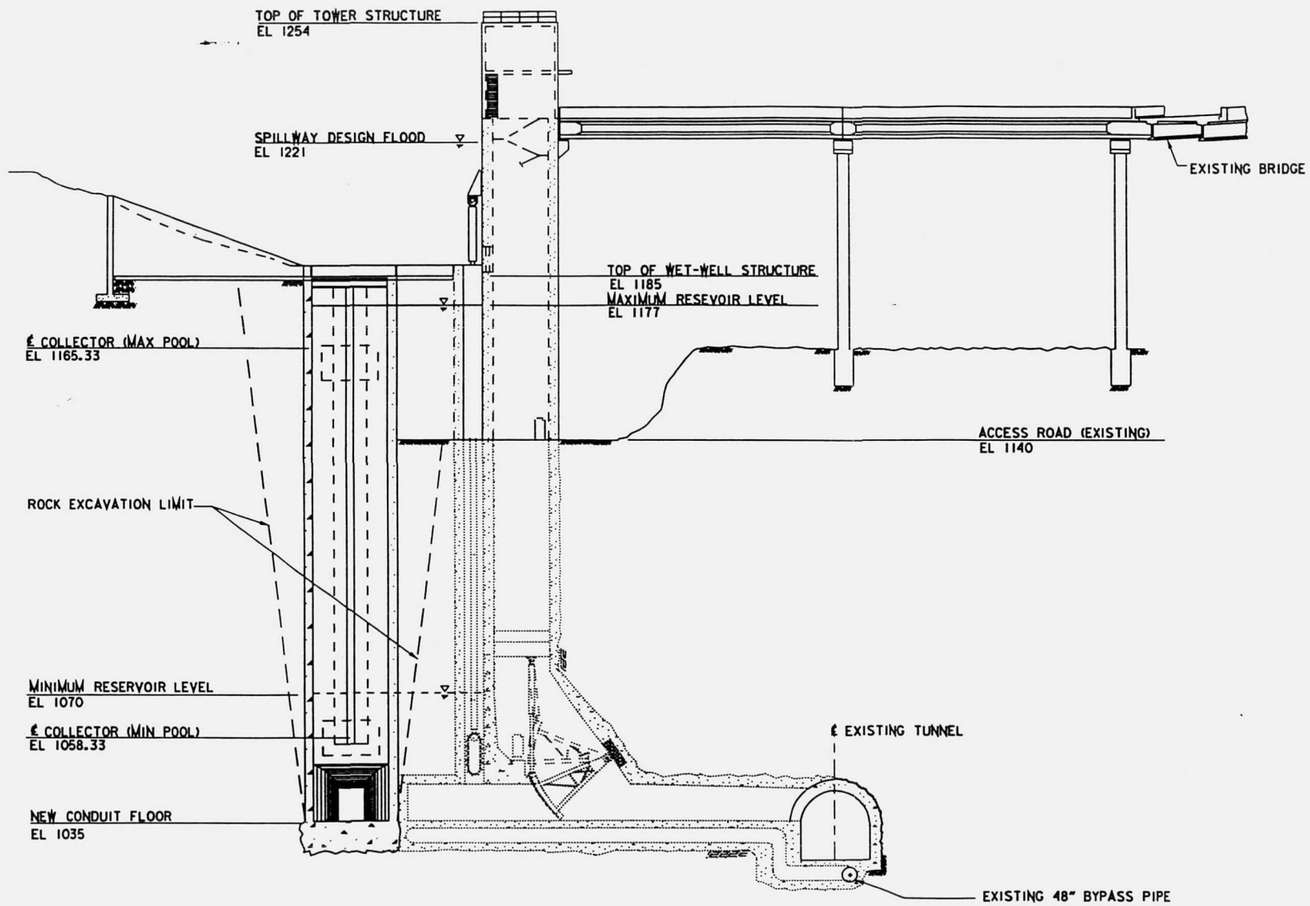

SECTION B / S.30

SCALE: 1" = 20'

1" = 20' 20' 10' 0 20' 40'

REDUCED TO 50% OF FULL SIZE

U.S. ARMY ENGINEER DISTRICT, SEATTLE
CORPS OF ENGINEERS
SEATTLE, WASHINGTON

HOWARD HANSON DAM
ADDITIONAL WATER STORAGE PROJECT

FISH COLLECTION FACILITY
ALTERNATIVE 9A8
WET-WELL STRUCTURE
CROSS-SECTION

GREEN RIVER WASHINGTON

SIZE	INVITATION NO.	FILE NO.	DATE	PLATE
D		E-56-14-17	98FEB18	S.32
DSGN. FRAGOMELI		CHK. NOYES	SHEET 33 OF 50	

DATE AND TIME PLOTTED: 18-FEB-1998 11:51 DESIGN FILE designs\hhowsstr\hhowse01.dgn

REVISIONS				
SYMBOL	ZONE	DESCRIPTION	DATE	BY

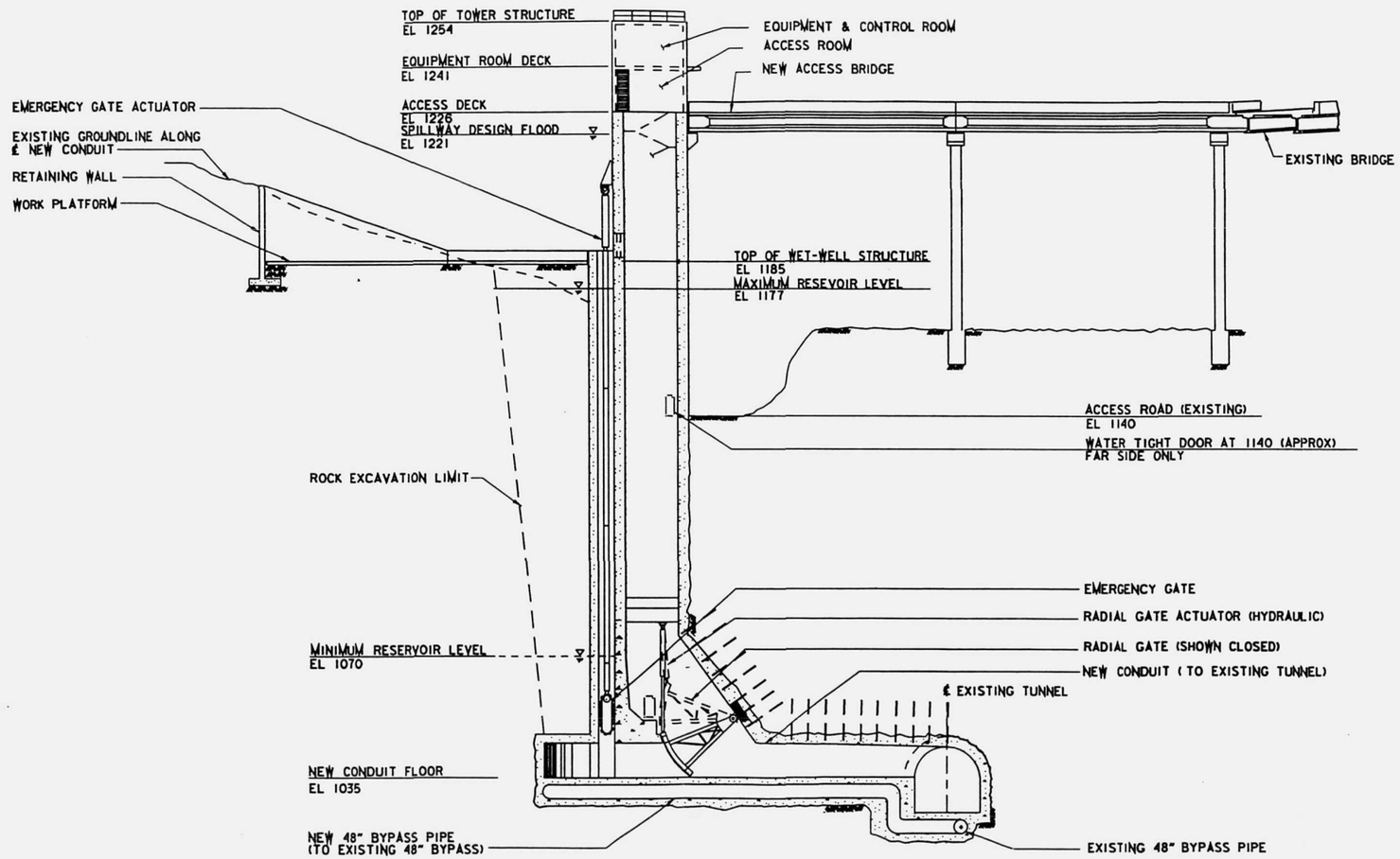

SECTION C/S.30

SCALE: 1" = 20'

1" = 20' 20' 10' 0 20' 40'

REDUCED TO 50% OF FULL SIZE

U.S. ARMY ENGINEER DISTRICT, SEATTLE
CORPS OF ENGINEERS
SEATTLE, WASHINGTON

HOWARD HANSON DAM
ADDITIONAL WATER STORAGE PROJECT
FISH COLLECTION FACILITY
ALTERNATIVE9A8
DISCHARGE CONDUIT AND INTAKE TOWER
SECTION ALONG CENTER LINE

GREEN RIVER WASHINGTON

SIZE	INVITATION NO.	FILE NO.	DATE	PLATE
D		E-56-14-17	98FEB18	S.33
DSGN. FRAGOMELI		CHK. NOYES	SHEET 34 OF 50	

DATE AND TIME PLOTTED: 18-FEB-1998 11:46 DESIGN FILE: signs#hhow#str#hhowse0h.dgn

REVISIONS				
SYMBOL	ZONE	DESCRIPTION	DATE	BY

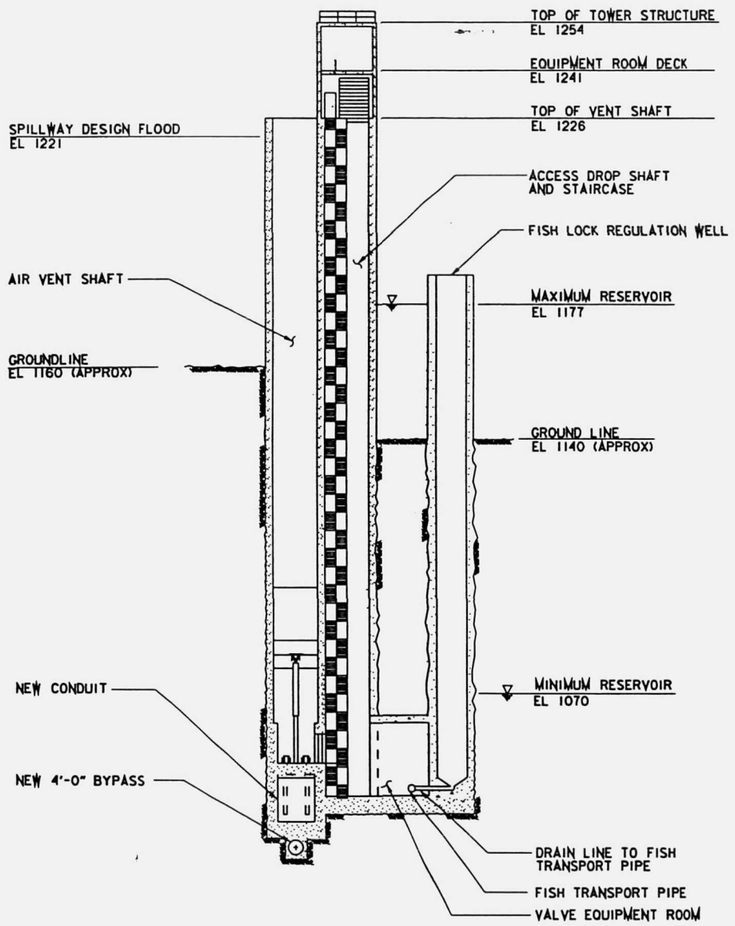

SECTION D / S.30

SCALE: 1" = 20'

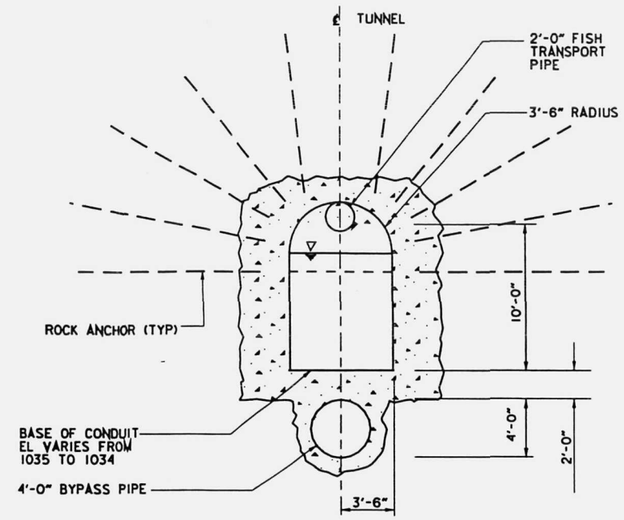

NEW DISCHARGE CONDUIT
CROSS-SECTION

SECTION E / S.30

SCALE: 1" = 5'

1" = 20' 20' 10' 0 20' 40'

REDUCED TO 50% OF FULL SIZE

U.S. ARMY ENGINEER DISTRICT, SEATTLE
CORPS OF ENGINEERS
SEATTLE, WASHINGTON

HOWARD HANSON DAM
ADDITIONAL WATER STORAGE PROJECT
FISH COLLECTION FACILITY
ALTERNATIVE 9A8
DISCHARGE CONDUIT AND INTAKE
TOWER CROSS SECTIONS

GREEN RIVER WASHINGTON

SIZE	SUBSTATION NO.	FILE NO.	DATE	PLATE
D		E-56-14-17	98FEB18	S.34
DSGN. FRAGOMELI		CHK. NOYES	SHEET 35 OF 50	

DESIGN FILE: I:\designs\hhows\str\hhowse01.dgn
DATE AND TIME PLOTTED: 18-FEB-1998 11:49

DESIGN FILE: I:\designs\hhows\str\hhowse01.dgn
DATE AND TIME PLOTTED: 18-FEB-1998 11:49

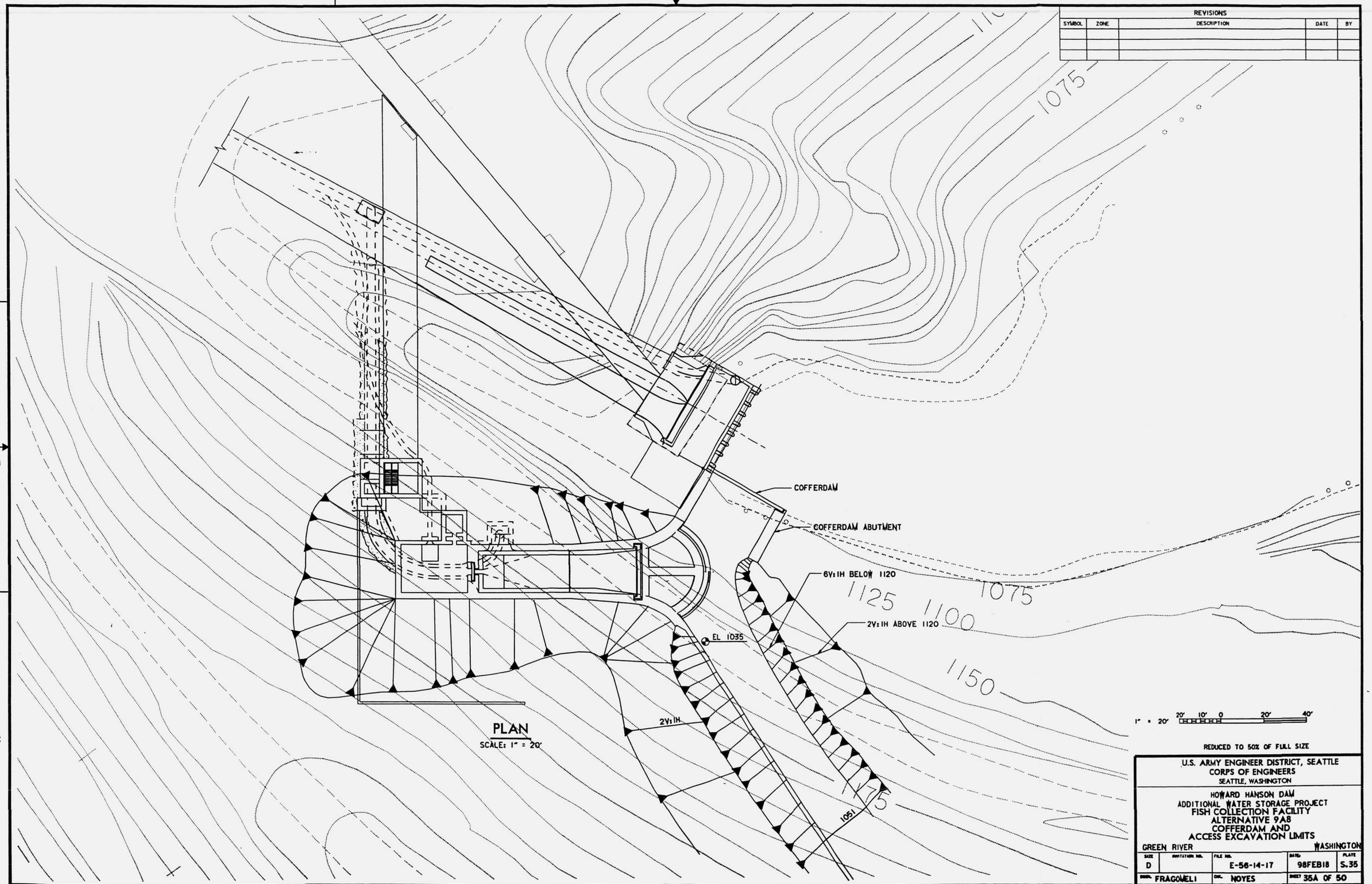

PLAN
SCALE: 1" = 20'

REVISIONS

SYMBOL	ZONE	DESCRIPTION	DATE	BY

REDUCED TO 50% OF FULL SIZE

U.S. ARMY ENGINEER DISTRICT, SEATTLE
CORPS OF ENGINEERS
SEATTLE, WASHINGTON

HOWARD HANSON DAM
ADDITIONAL WATER STORAGE PROJECT
FISH COLLECTION FACILITY
ALTERNATIVE 9A8
COFFERDAM AND
ACCESS EXCAVATION LIMITS

GREEN RIVER WASHINGTON

SIZE	INVITATION NO.	FILE NO.	DATE	PLATE
D		E-56-14-17	98FEB18	S.35
DSGN. FRAGOMELI		CHK. NOYES	SHEET 35A OF 50	

DESIGN FILE: ...signs#hhaw#str#hhawse0d.dgn
DATE AND TIME PLOTTED: 18-FEB-1998 13:20

REVISIONS				
SYMBOL	ZONE	DESCRIPTION	DATE	BY

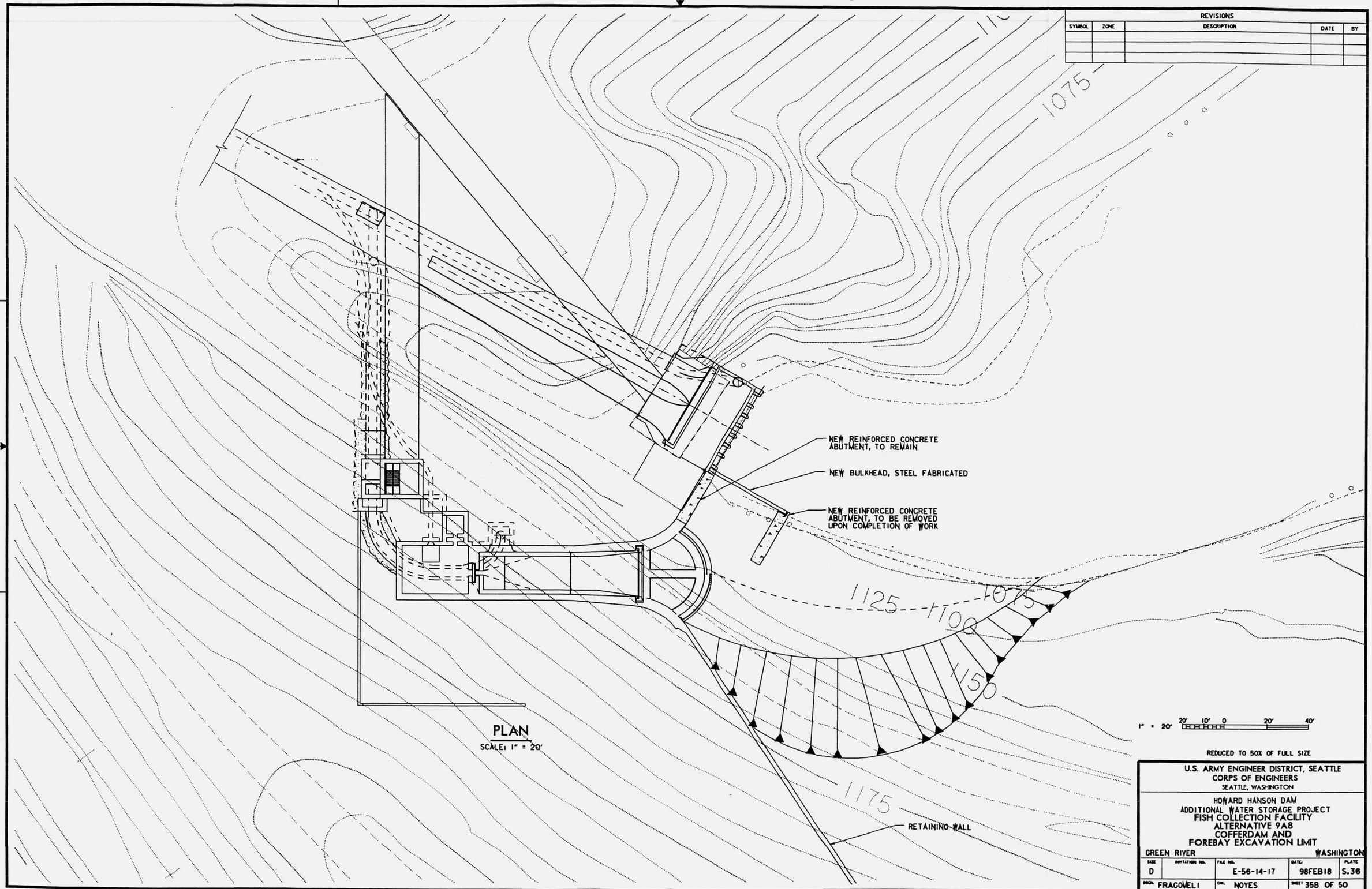

REDUCED TO 50% OF FULL SIZE

U.S. ARMY ENGINEER DISTRICT, SEATTLE
CORPS OF ENGINEERS
SEATTLE, WASHINGTON

HOWARD HANSON DAM
ADDITIONAL WATER STORAGE PROJECT
FISH COLLECTION FACILITY
ALTERNATIVE 9A8
COFFERDAM AND
FOREBAY EXCAVATION LIMIT

GREEN RIVER — WASHINGTON

SIZE	INVITATION NO.	FILE NO.	DATE	PLATE
D		E-56-14-17	98FEB18	S.36
DSGN. FRAGOMELI		CHK. NOYES	SHEET 35B OF 50	

DATE AND TIME PLOTTED: 18-FEB-1998 13:25 DESIGN FIL /designs/howstr/howse06.dgn

REVISIONS				
SYMBOL	ZONE	DESCRIPTION	DATE	BY

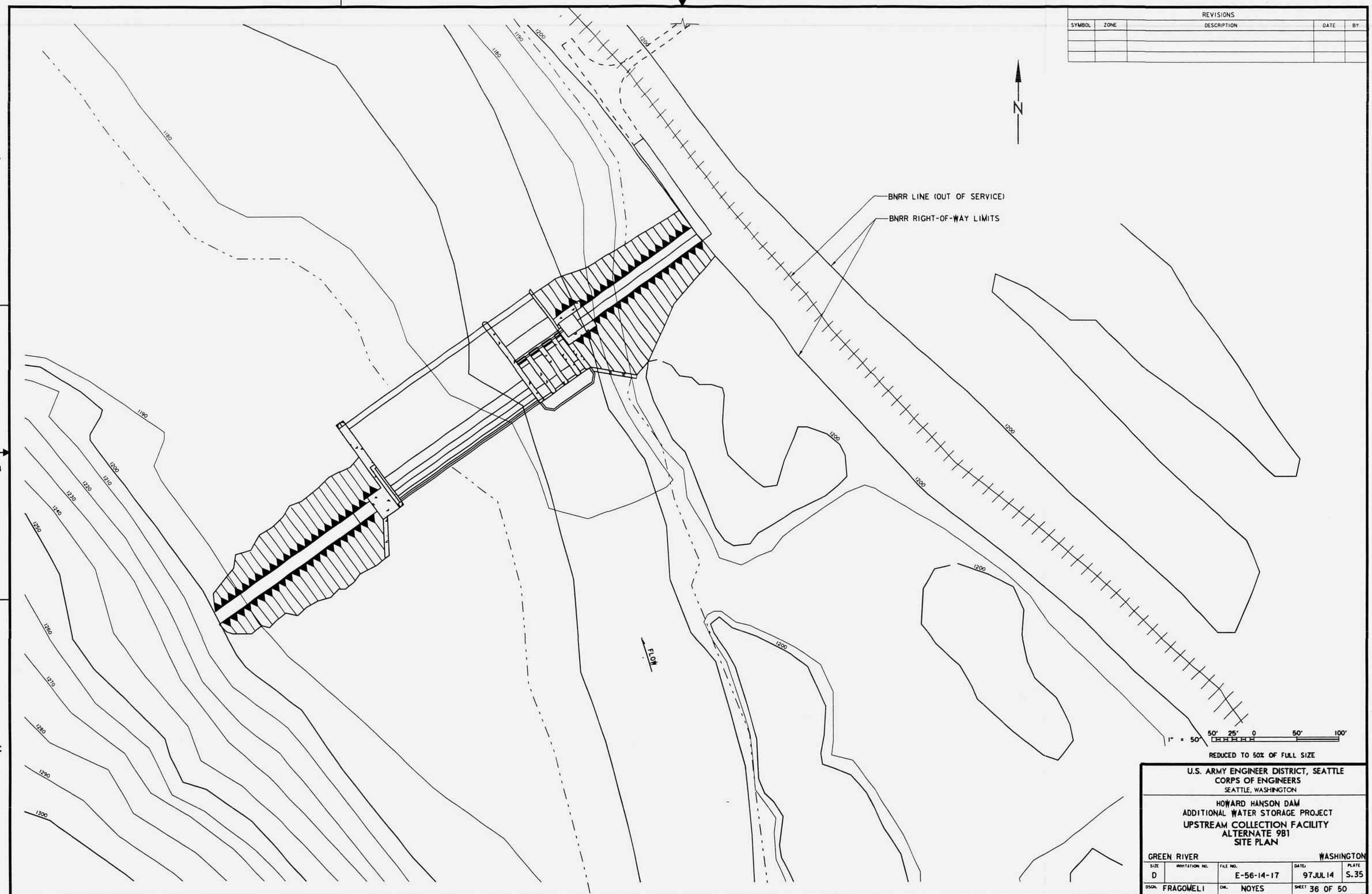

REDUCED TO 50% OF FULL SIZE

U.S. ARMY ENGINEER DISTRICT, SEATTLE
CORPS OF ENGINEERS
SEATTLE, WASHINGTON

HOWARD HANSON DAM
ADDITIONAL WATER STORAGE PROJECT
UPSTREAM COLLECTION FACILITY
ALTERNATE 9B1
SITE PLAN

GREEN RIVER WASHINGTON

SIZE	INVITATION NO.	FILE NO.	DATE	PLATE
D		E-56-14-17	97JUL14	S.35
DSGN. FRAGOMELI		CHK. NOYES	SHEET 36 OF 50	

DATE AND TIME PLOTTED: 09-JUL-1997 13:37
DESIGN FILE: I:#designs#hhaw#str#HHAWSA1B.dgn

DATE AND TIME PLOTTED: 09-JUL-1997 13:37 DESIGN FIL. I:#designs#hhaw#str#HHAWSA1B.dgn

REVISIONS				
SYMBOL	ZONE	DESCRIPTION	DATE	BY

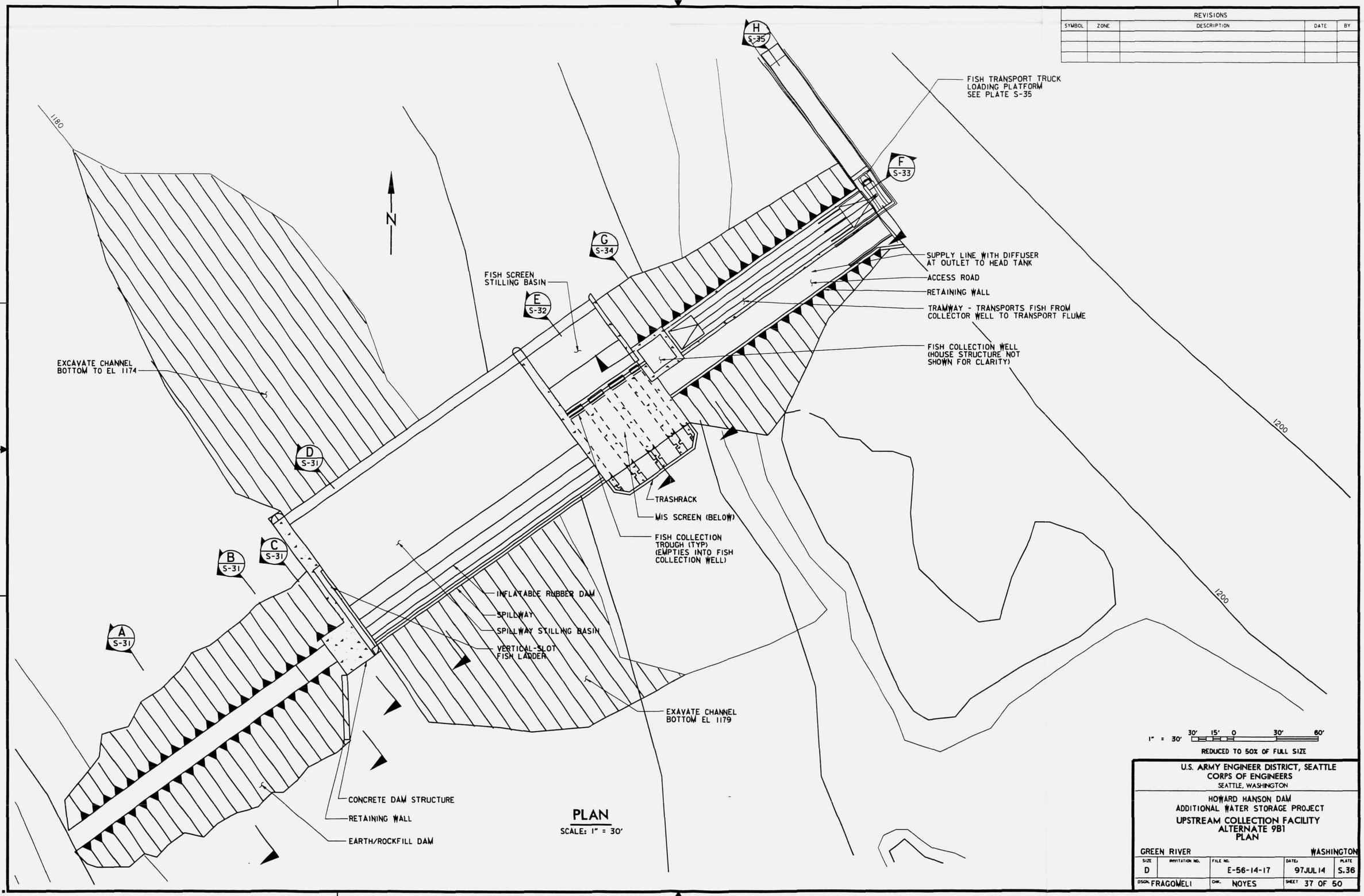

U.S. ARMY ENGINEER DISTRICT, SEATTLE
CORPS OF ENGINEERS
SEATTLE, WASHINGTON

HOWARD HANSON DAM
ADDITIONAL WATER STORAGE PROJECT

UPSTREAM COLLECTION FACILITY
ALTERNATE 9B1
PLAN

GREEN RIVER — WASHINGTON

SIZE	INVITATION NO.	FILE NO.	DATE	PLATE
D		E-56-14-17	97JUL14	S.36
DSGN. FRAGOMELI		CHK. NOYES	SHEET 37 OF 50	

DATE AND TIME PLOTTED: 09-JUL-1997 13:34
DESIGN FILE: I:#designs#hhaw#str#HHAWSAIF.dgn

DATE AND TIME PLOTTED: 09-JUL-1997 13:34
DESIGN FI :#designs#hhaw#str#HHAWSAIF.dgn

REVISIONS				
SYMBOL	ZONE	DESCRIPTION	DATE	BY

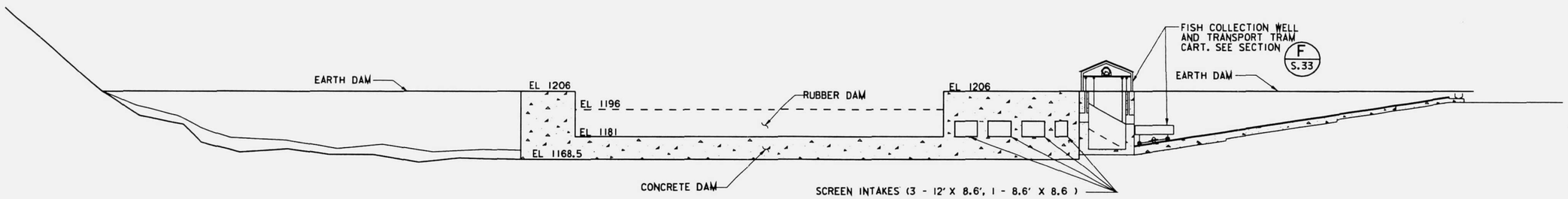

CROSS SECTION THROUGH CENTERLINE OF DAM

SCALE: 1" = 30'

1" = 30' 30' 15' 0 30' 60'

REDUCED TO 50% OF FULL SIZE

U.S. ARMY ENGINEER DISTRICT, SEATTLE
CORPS OF ENGINEERS
SEATTLE, WASHINGTON

HOWARD HANSON DAM
ADDITIONAL WATER STORAGE PROJECT
UPSTREAM COLLECTION FACILITY
ALTERNATE 9B1
CROSS SECTION

GREEN RIVER WASHINGTON

SIZE	INVITATION NO.	FILE NO.	DATE	PLATE
D		E-56-14-17	97JUL14	S.37
DSGN. FRAGOMELI		CHK. NOYES	SHEET 38 OF 50	

Computer Aided Design & Drafting

DATE AND TIME PLOTTED: 09-JUL-1997 13:44
DESIGN FILE: I:\designs\hhaw\str\HHAWSA11.dgn

DATE AND TIME PLOTTED: 09-JUL-1997 13:44
DESIGN FI... :\designs\hhaw\str\HHAWSA11.dgn

REVISIONS				
SYMBOL	ZONE	DESCRIPTION	DATE	BY

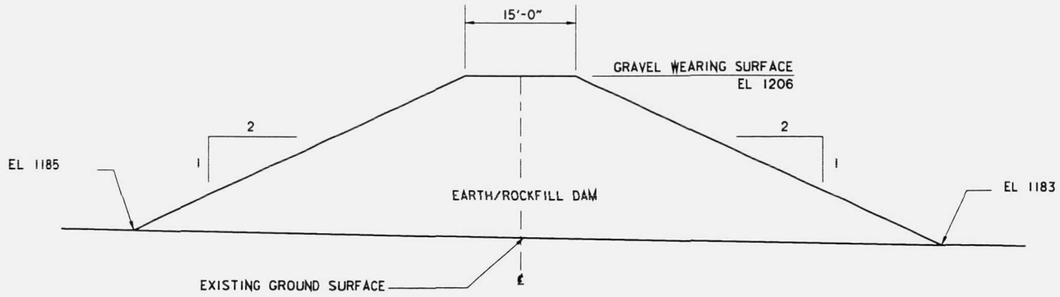

SECTION A S.29
SCALE: 1" = 10'

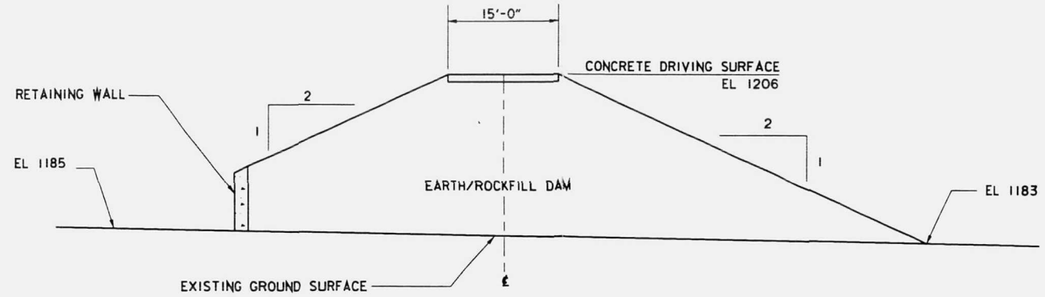

SECTION B S.29
SCALE: 1" = 10'

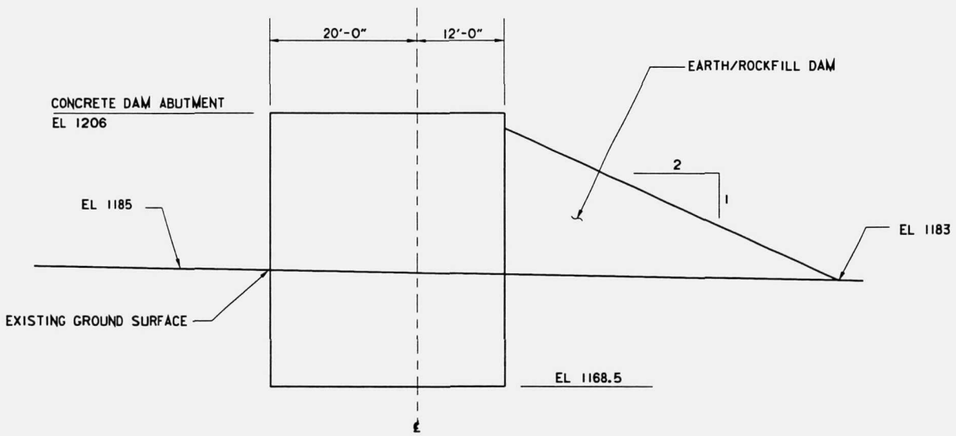

SECTION C S.29
SCALE: 1" = 10'

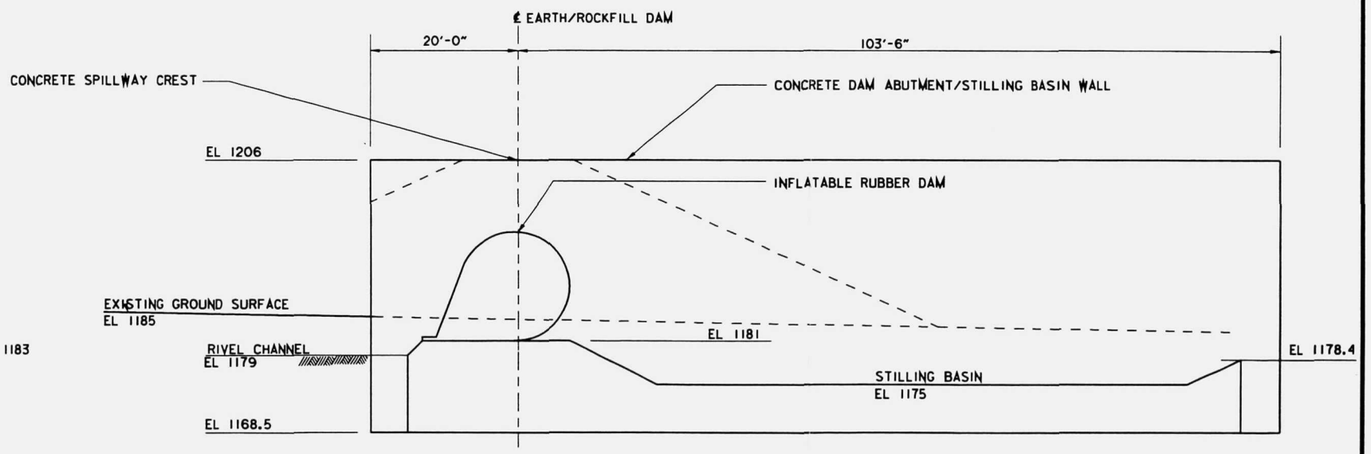

SECTION D S.29
SCALE: 1" = 10'

1" = 10' 10' 5' 0 10' 20'

REDUCED TO 50% OF FULL SIZE

U.S. ARMY ENGINEER DISTRICT, SEATTLE
CORPS OF ENGINEERS
SEATTLE, WASHINGTON

HOWARD HANSON DAM
ADDITIONAL WATER STORAGE PROJECT
UPSTREAM COLLECTION FACILITY
ALTERNATE 9B1
SECTIONS - I

GREEN RIVER WASHINGTON

SIZE	INVITATION NO.	FILE NO.	DATE:	PLATE
D		E-56-14-17	97JUL14	S.38
DSGN. FRAGOMELI		CHK. NOYES	SHEET 39 OF 50	

DATE AND TIME PLOTTED: 09-JUL-1997 13:45
DESIGN FILE: I:#designs#hhow#str#HHAWSAIC.dgn

DATE AND TIME PLOTTED: 09-JUL-1997 13:45
DESIGN FIL #designs#hhow#str#HHAWSAIC.dgn

REVISIONS				
SYMBOL	ZONE	DESCRIPTION	DATE	BY
------	--	----------	-------	---
------	--	----------	-------	---
------	--	----------	-------	---

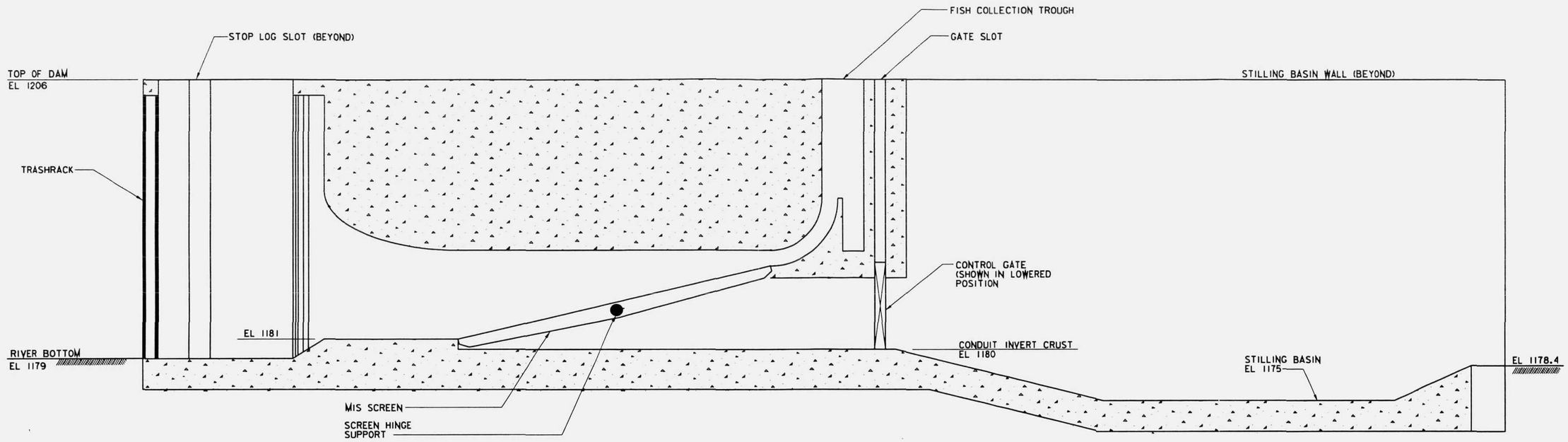

SECTION

SCALE: 1" = 5'

E
S.29

1" = 5' 5' 0 5' 10'

REDUCED TO 50% OF FULL SIZE

U.S. ARMY ENGINEER DISTRICT, SEATTLE
CORPS OF ENGINEERS
SEATTLE, WASHINGTON

HOWARD HANSON DAM
ADDITIONAL WATER STORAGE PROJECT
UPSTREAM COLLECTION FACILITY
ALTERNATE 9B1
SECTION - II

GREEN RIVER WASHINGTON

SIZE	INVITATION NO.	FILE NO.	DATE:	PLATE
D		E-56-14-17	97JUL14	S.39
DSGN. FRAGOMELI		CHK. NOYES	SHEET 40 OF 50	

DATE AND TIME PLOTTED: 09-JUL-1997 13:48
DESIGN FILE: I:\designs\hhaw\str\HHAWSAIH.dgn

DATE AND TIME PLOTTED: 09-JUL-1997 13:48
DESIGN FI designs\hhaw\str\HHAWSAIH.dgn

REVISIONS				
SYMBOL	ZONE	DESCRIPTION	DATE	BY

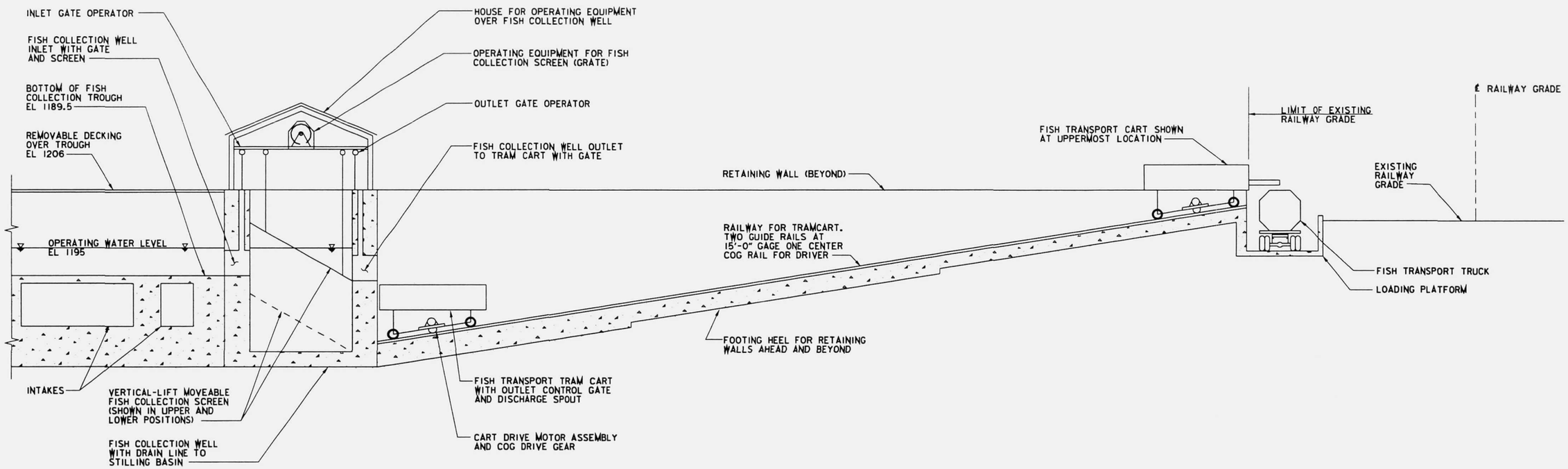

SECTION F S.29

SCALE: 1" = 10'

1" = 10' 10' 5' 0 10' 20'

REDUCED TO 50% OF FULL SIZE

U.S. ARMY ENGINEER DISTRICT, SEATTLE
CORPS OF ENGINEERS
SEATTLE, WASHINGTON

HOWARD HANSON DAM
ADDITIONAL WATER STORAGE PROJECT
USTREAM COLLECTION FACILITY
ALTERNATE 9B1
SECTION – III

GREEN RIVER WASHINGTON

SIZE	INVITATION NO.	FILE NO.	DATE	PLATE
D		E-56-14-17	97JUL14	S.40
DSGN. FRAGOMELI		CHK. NOYES	SHEET 41 OF 50	

Computer Aided Design & Drafting

DATE AND TIME PLOTTED: 09-JUL-1997 13:51
DESIGN FILE: I:\designs\hhaw\str\HHAWSA1J.dgn

DATE AND TIME PLOTTED: 09-JUL-1997 13:51 DESIGN FI... \designs\hhaw\str\HHAWSA1J.dgn

REVISIONS				
SYMBOL	ZONE	DESCRIPTION	DATE	BY

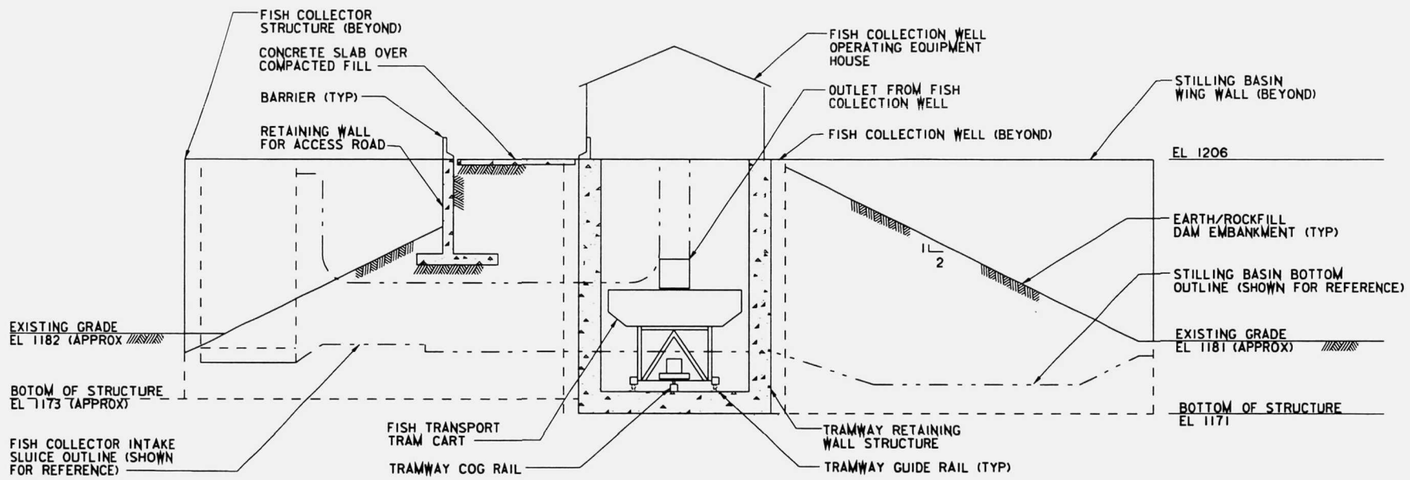

SECTION G / S.29

SCALE: 1" = 10'

1" = 10' 10' 5' 0 10' 20'

REDUCED TO 50% OF FULL SIZE

U.S. ARMY ENGINEER DISTRICT, SEATTLE
CORPS OF ENGINEERS
SEATTLE, WASHINGTON

HOWARD HANSON DAM
ADDITIONAL WATER STORAGE PROJECT

UPSTREAM COLLECTION FACILITY
ALTERNATE 9B1
SECTION - IV

GREEN RIVER WASHINGTON

SIZE	INVITATION NO.	FILE NO.	DATE	PLATE
D		E-56-14-17	97JUL14	S.41
DSGN. FRAGOMELI		CHK. NOYES	SHEET 42 OF 50	

DATE AND TIME PLOTTED: 09-JUL-1997 13:54
DESIGN FILE: I:#designs#hhaw#str#HHAWSAIK.dgn

REVISIONS				
SYMBOL	ZONE	DESCRIPTION	DATE	BY

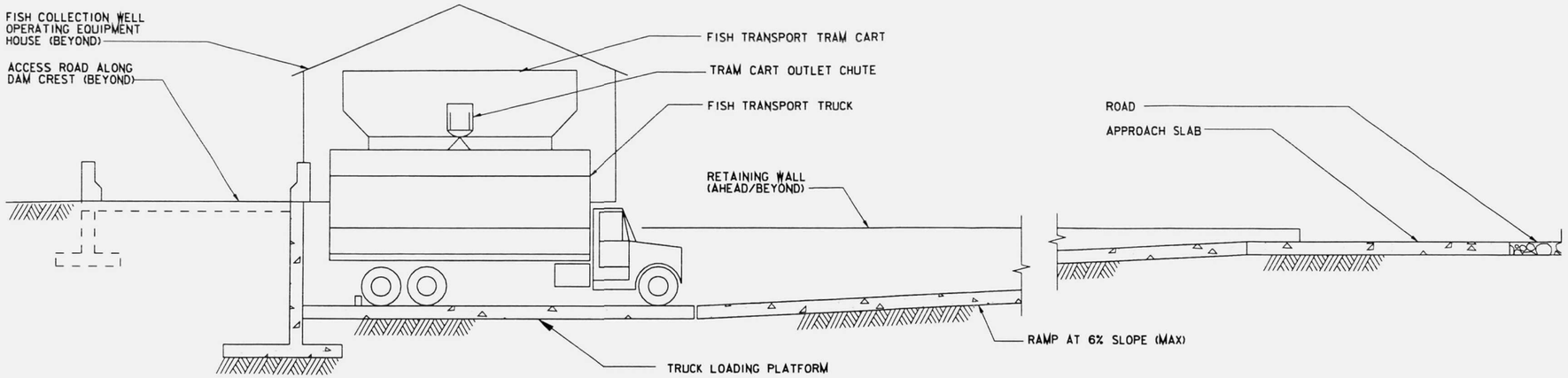

SECTION H S.29

SCALE: 1" = 5'

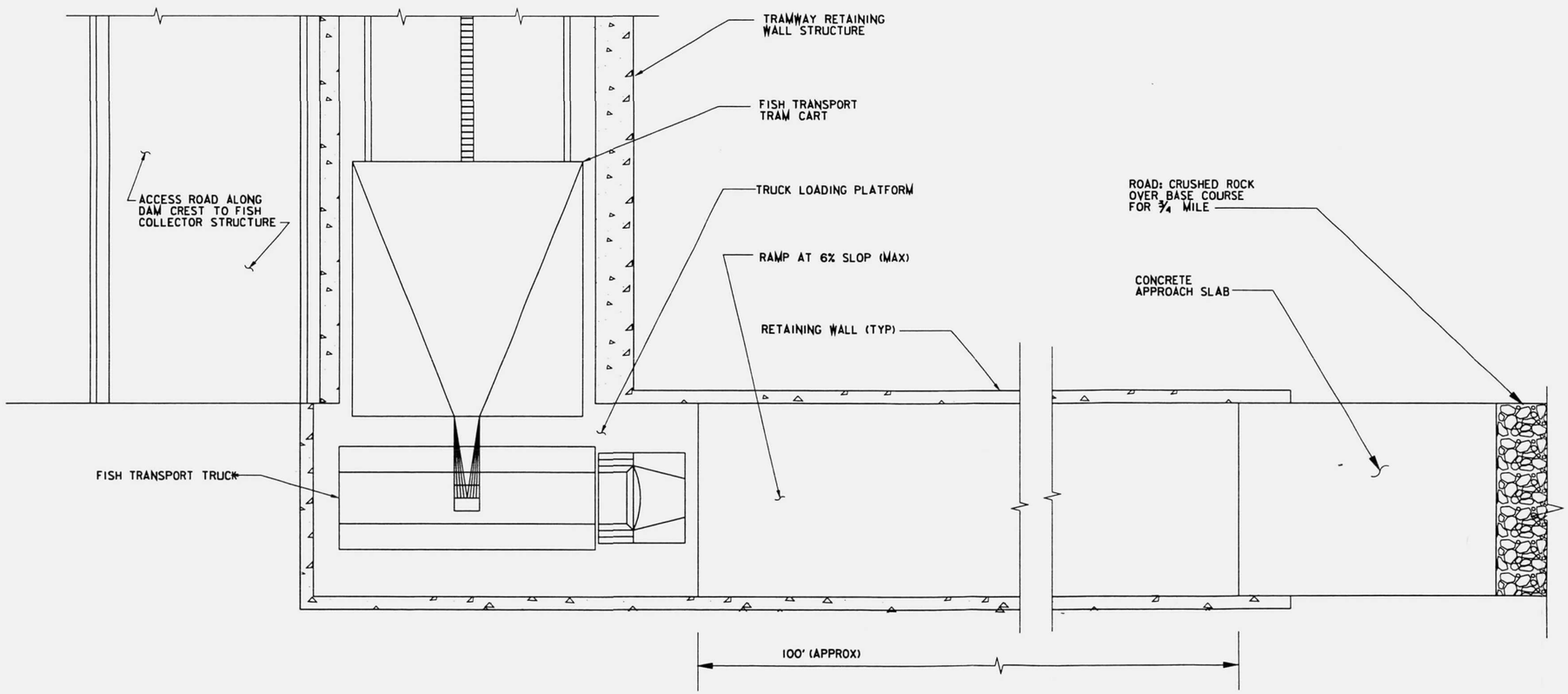

PLAN VIEW

SCALE: 1" = 5'

1" = 5' 5' 0 5' 10

REDUCED TO 50% OF FULL SIZE

U.S. ARMY ENGINEER DISTRICT, SEATTLE
CORPS OF ENGINEERS
SEATTLE, WASHINGTON

HOWARD HANSON DAM
ADDITIONAL WATER STORAGE PROJECT
UPSTREAM COLLECTION FACILITY
ALTERNATE 9B1
PLAN AND SECTION

GREEN RIVER WASHINGTON

SIZE	INVITATION NO.	FILE NO.	DATE	PLATE
D		E-56-14-17	97JUL14	S.42
DSGN. FRAGOMELI		CHK. NOYES	SHEET 43 OF 50	

DATE AND TIME PLOTTED: 09-JUL-1997 13:56
DESIGN FILE: I:#designs#hhow#str#HHAWSAIL.dgn

DATE AND TIME PLOTTED: 09-JUL-1997 13:56
DESIGN FIL #designs#hhow#str#HHAWSAIL.dgn

REVISIONS				
SYMBOL	ZONE	DESCRIPTION	DATE	BY

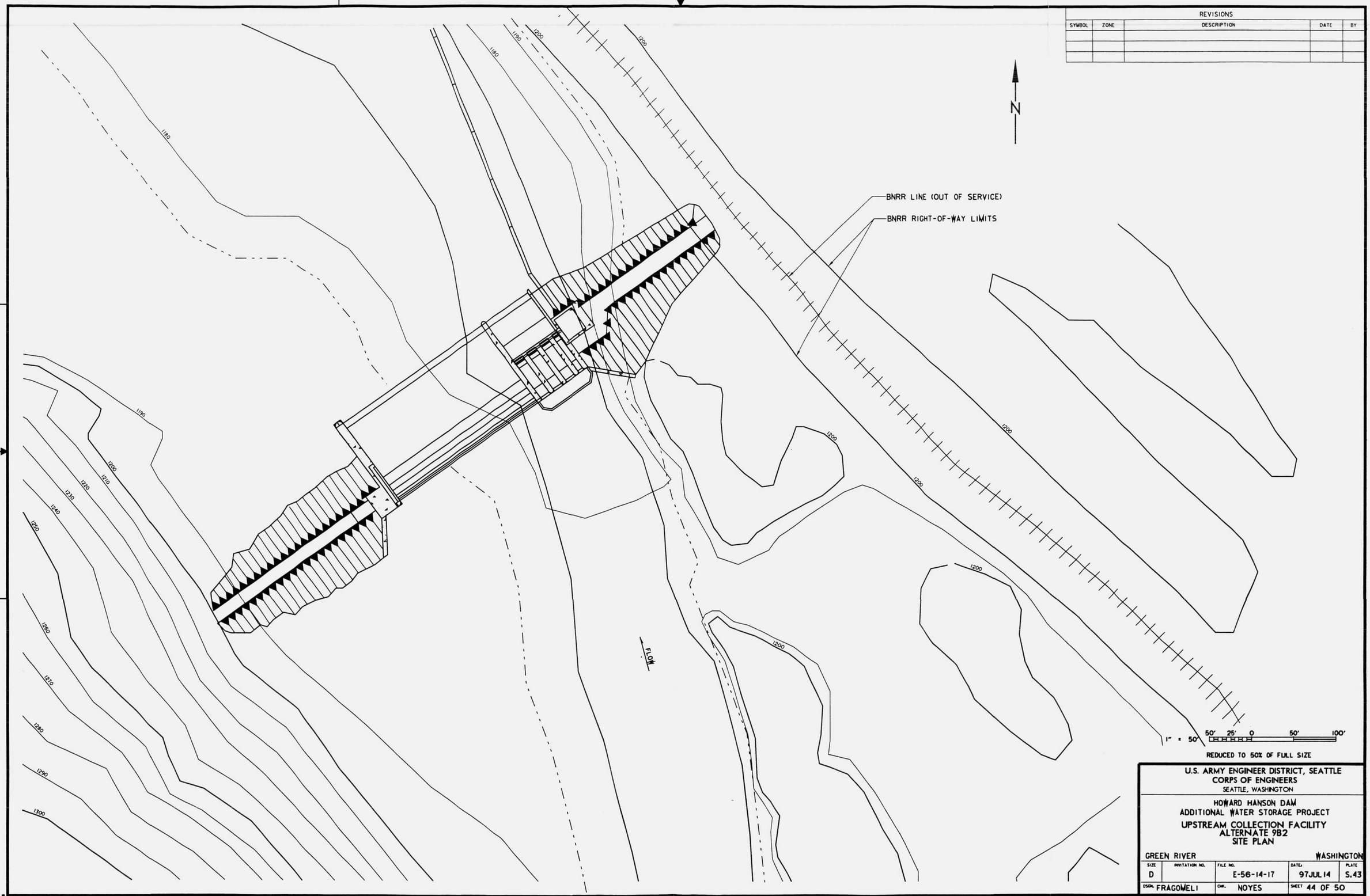

U.S. ARMY ENGINEER DISTRICT, SEATTLE
CORPS OF ENGINEERS
SEATTLE, WASHINGTON

HOWARD HANSON DAM
ADDITIONAL WATER STORAGE PROJECT

UPSTREAM COLLECTION FACILITY
ALTERNATE 9B2
SITE PLAN

GREEN RIVER WASHINGTON

SIZE	INVITATION NO.	FILE NO.	DATE	PLATE
D		E-56-14-17	97JUL14	S.43
DSGN. FRAGOMELI		CHK. NOYES	SHEET 44 OF 50	

DATE AND TIME PLOTTED: 09-JUL-1997 14:01
DESIGN FILE: I:#designs#hhaw#str#HHAWSAIN.dgn

DATE AND TIME PLOTTED: 09-JUL-1997 14:01 DESIGN FI
#designs#hhaw#str#HHAWSAIN.dgn

REVISIONS				
SYMBOL	ZONE	DESCRIPTION	DATE	BY

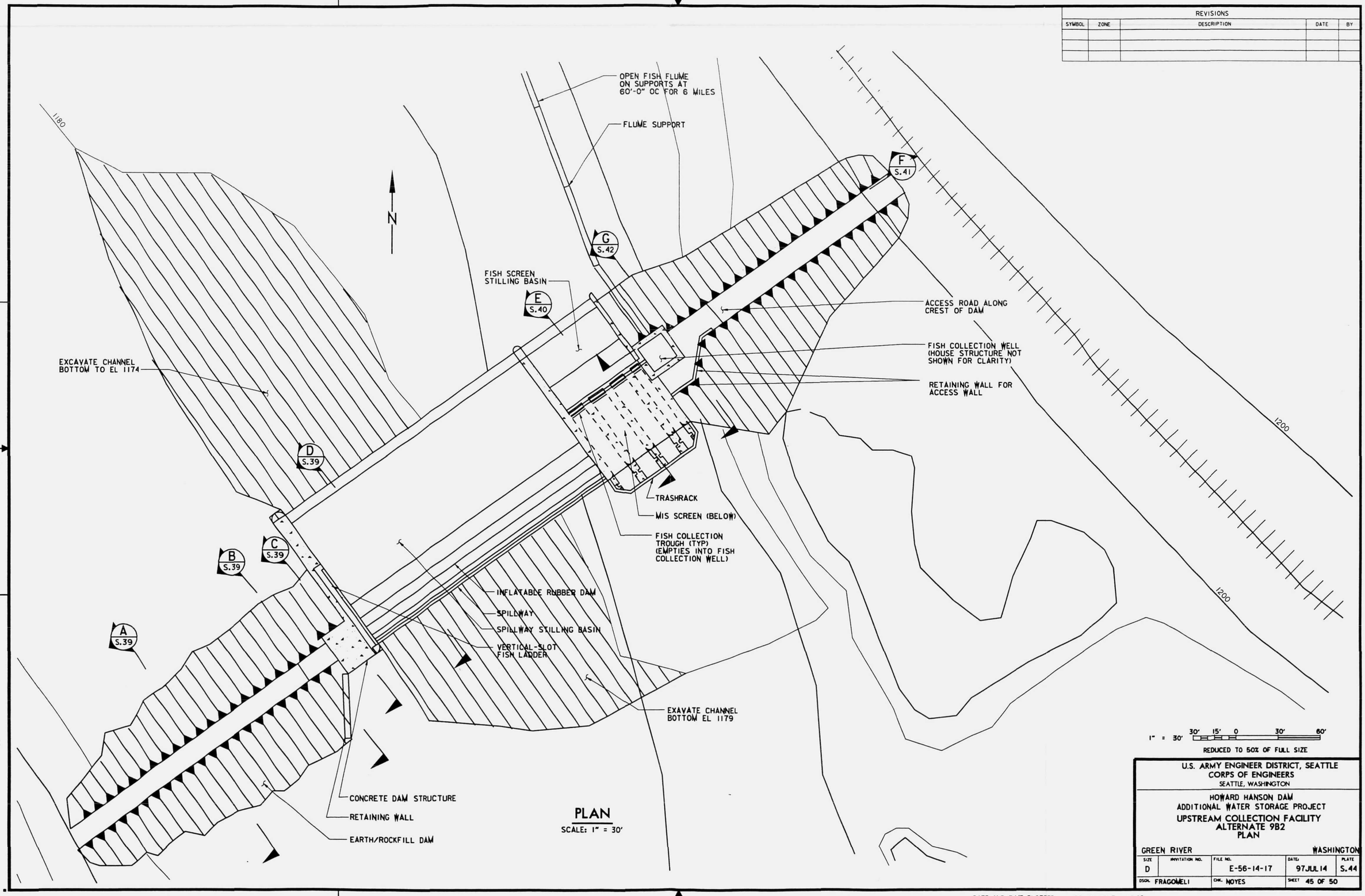

PLAN

SCALE: 1" = 30'

U.S. ARMY ENGINEER DISTRICT, SEATTLE
CORPS OF ENGINEERS
SEATTLE, WASHINGTON

HOWARD HANSON DAM
ADDITIONAL WATER STORAGE PROJECT
UPSTREAM COLLECTION FACILITY
ALTERNATE 9B2
PLAN

GREEN RIVER — WASHINGTON

SIZE	INVITATION NO.	FILE NO.	DATE	PLATE
D		E-56-14-17	97JUL14	S.44
DSGN. FRAGOMELI		CHK. NOYES	SHEET 45 OF 50	

DATE AND TIME PLOTTED: 09-JUL-1997 14:05
DESIGN FILE: I:\designs\hhaw\str\HHAWSA10.dgn

DATE AND TIME PLOTTED: 09-JUL-1997 14:05
DESIGN FI :\designs\hhaw\str\HHAWSA10.dgn

REVISIONS				
SYMBOL	ZONE	DESCRIPTION	DATE	BY

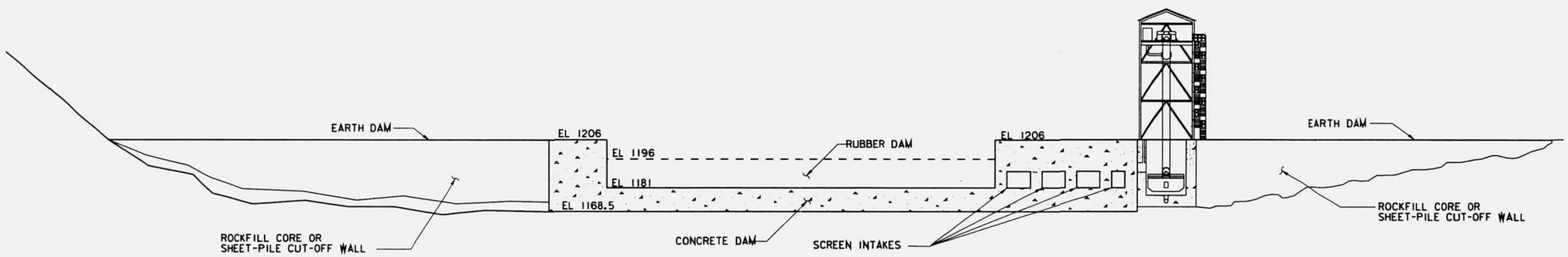

CROSS SECTION THROUGH CENTERLINE OF DAM

SCALE: 1" = 30'

1" = 30' 30' 15' 0 30' 60'

REDUCED TO 50% OF FULL SIZE

U.S. ARMY ENGINEER DISTRICT, SEATTLE
CORPS OF ENGINEERS
SEATTLE, WASHINGTON

HOWARD HANSON DAM
ADDITIONAL WATER STORAGE PROJECT

UPSTREAM COLLECTION FACILITY
ALTERNATE 9B2
CROSS SECTION

GREEN RIVER WASHINGTON

SIZE	INVITATION NO.	FILE NO.	DATE:	PLATE
D		E-56-14-17	97JUL14	S.45
DSGN. FRAGOMELI		CHK. NOYES	SHEET 46 OF 50	

DATE AND TIME PLOTTED: 09-JUL-1997 14:07
DESIGN FILE: I:#designs#hhow#str#HHAWSAIP.dgn

DATE AND TIME PLOTTED: 09-JUL-1997 14:07
DESIGN FILE: I:#designs#hhow#str#HHAWSAIP.dgn

REVISIONS				
SYMBOL	ZONE	DESCRIPTION	DATE	BY

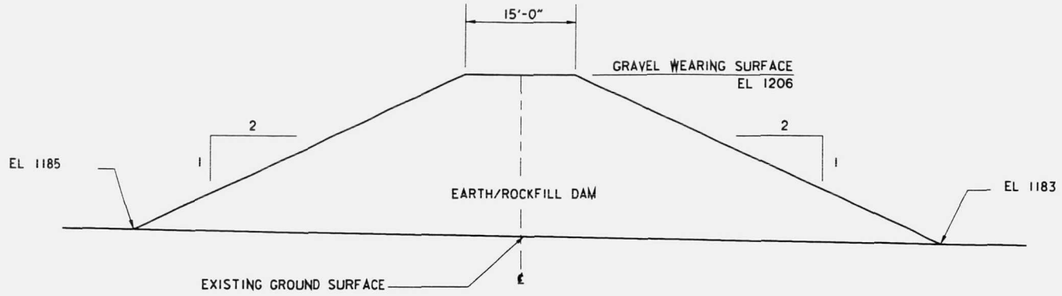

SECTION A S.37
SCALE: 1" = 10'

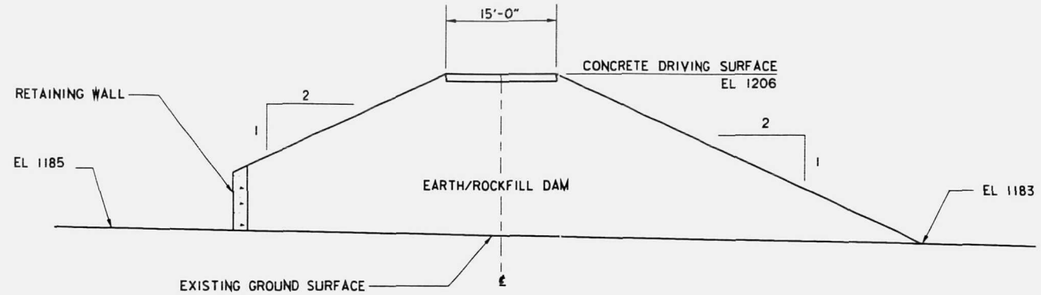

SECTION B S.37
SCALE: 1" = 10'

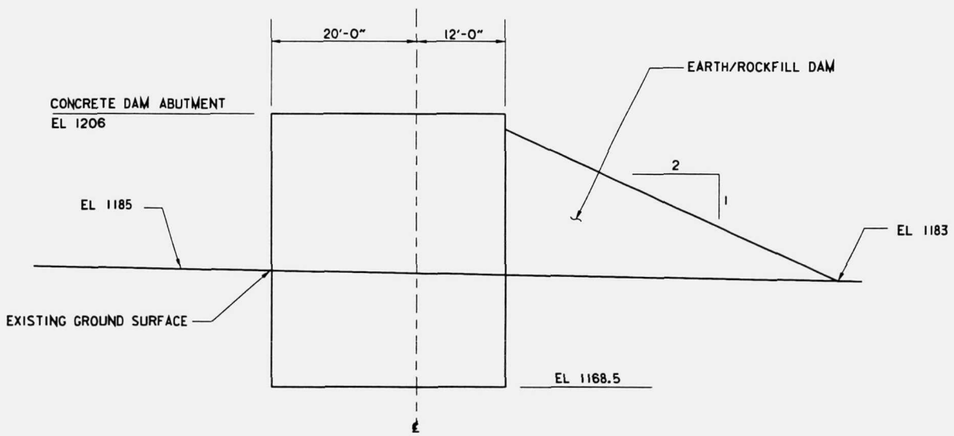

SECTION C S.37
SCALE: 1" = 10'

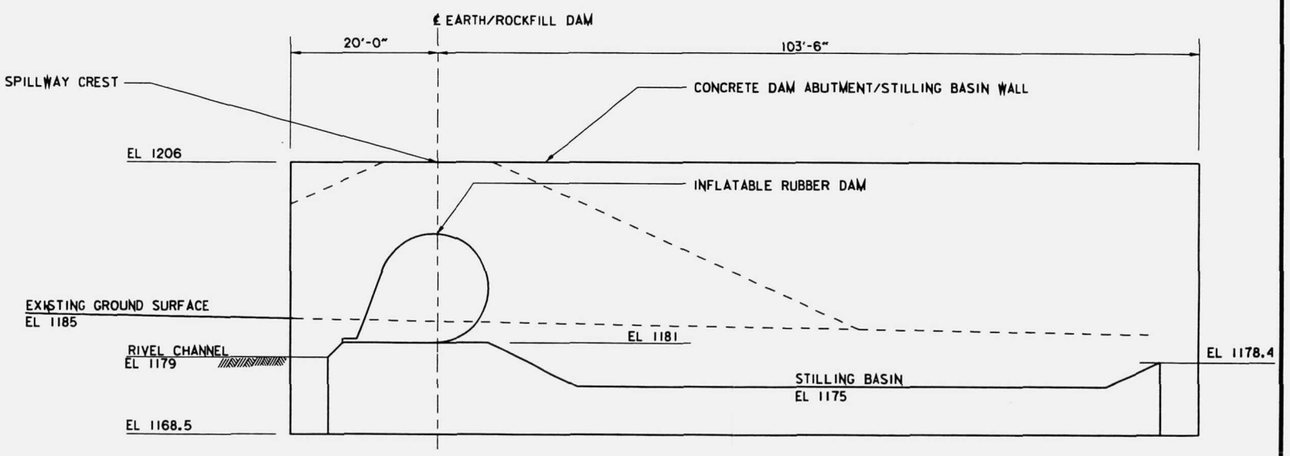

SECTION D S.37
SCALE: 1" = 10'

1" = 10' 10' 5' 0 10' 20'

REDUCED TO 50% OF FULL SIZE

U.S. ARMY ENGINEER DISTRICT, SEATTLE
CORPS OF ENGINEERS
SEATTLE, WASHINGTON

HOWARD HANSON DAM
ADDITIONAL WATER STORAGE PROJECT

UPSTREAM COLLECTION FACILITY
ALTERNATE 9B2
SECTIONS - I

GREEN RIVER WASHINGTON

SIZE	INVITATION NO.	FILE NO.	DATE:	PLATE
D		E-56-14-17	97JUL14	S.46
DSGN. FRAGOMELI		CHK. NOYES	SHEET 47 OF 50	

DATE AND TIME PLOTTED: 09-JUL-1997 14:10
DESIGN FILE: I:\designs\hhaw\str\HHAWSA10.dgn

DATE AND TIME PLOTTED: 09-JUL-1997 14:10
DESIGN FI ...\designs\hhaw\str\HHAWSA10.dgn

REVISIONS				
SYMBOL	ZONE	DESCRIPTION	DATE	BY

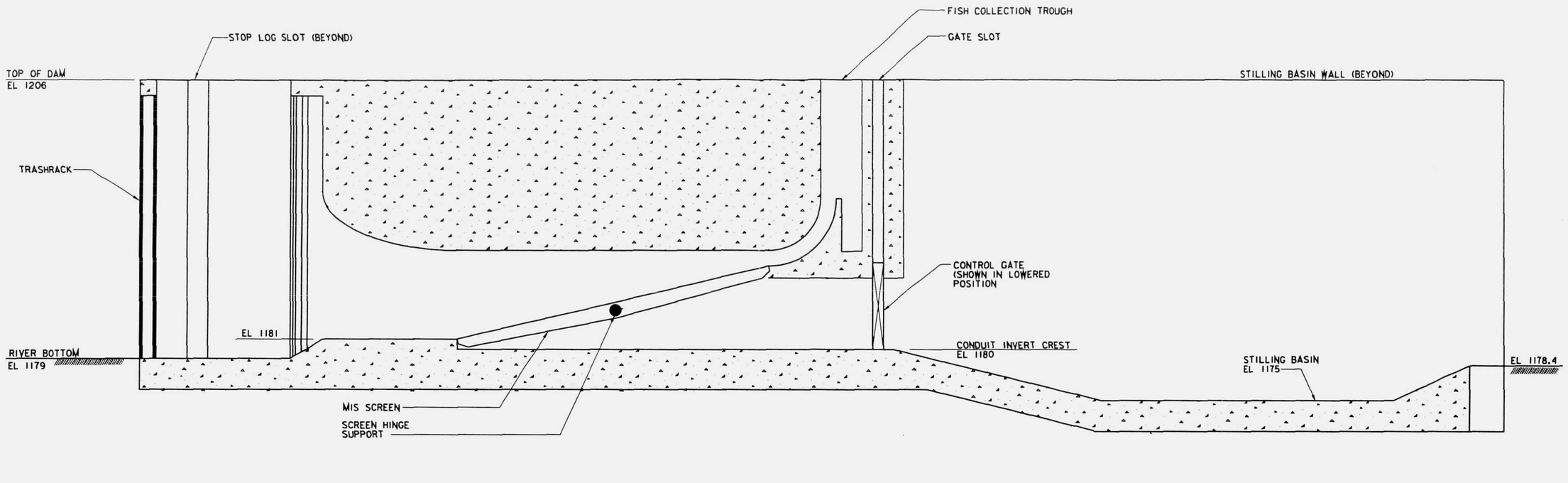

SECTION

SCALE: 1" = 5'

E
S.37

1" = 5' 5' 0 5' 10'

REDUCED TO 50% OF FULL SIZE

U.S. ARMY ENGINEER DISTRICT, SEATTLE
CORPS OF ENGINEERS
SEATTLE, WASHINGTON

HOWARD HANSON DAM
ADDITIONAL WATER STORAGE PROJECT
UPSTREAM COLLECTION FACILITY
ALTERNATE 9B2
SECTION - II

GREEN RIVER WASHINGTON

SIZE	INVITATION NO.	FILE NO.	DATE	PLATE
D		E-56-14-17	97JUL14	S.47
DSGN. FRAGOMELI		CHK. NOYES	SHEET 48 OF 50	

DATE AND TIME PLOTTED: 09-JUL-1997 14:13
DESIGN FILE: I:\designs\hhaw\str\HHAWSAIR.dgn

DATE AND TIME PLOTTED: 09-JUL-1997 14:13
DESIGN FILE: I:\designs\hhaw\str\HHAWSAIR.dgn

REVISIONS				
SYMBOL	ZONE	DESCRIPTION	DATE	BY

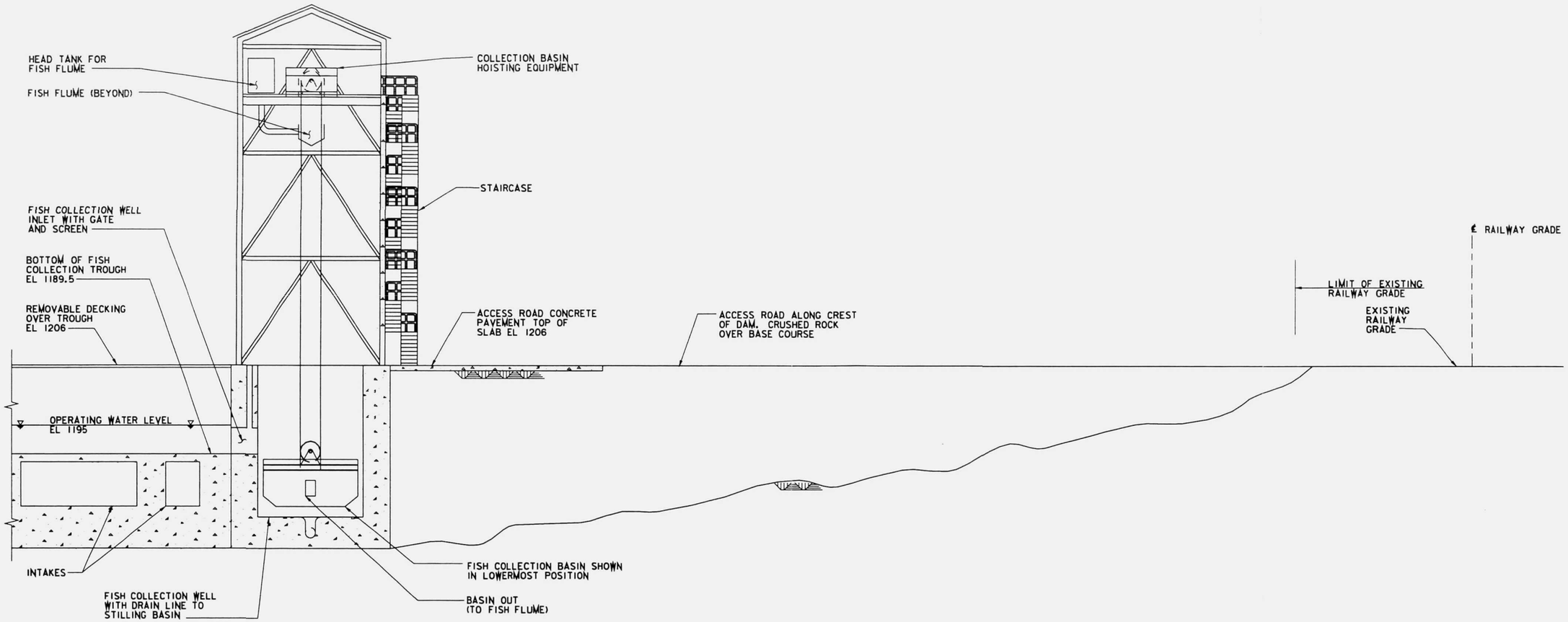

SECTION F / S.37

SCALE: 1" = 10'

1" = 10' 10' 5' 0 10' 20'

REDUCED TO 50% OF FULL SIZE

U.S. ARMY ENGINEER DISTRICT, SEATTLE
CORPS OF ENGINEERS
SEATTLE, WASHINGTON

HOWARD HANSON DAM
ADDITIONAL WATER STORAGE PROJECT
USTREAM COLLECTION FACILITY
ALTERNATE 9B2
SECTION - III

GREEN RIVER — WASHINGTON

SIZE	INVITATION NO.	FILE NO.	DATE	PLATE
D		E-56-14-17	97JUL14	S.48
DSGN. FRAGOMELI		CHK. NOYES	SHEET 49 OF 50	

Computer Aided Drafting & Drafting

DATE AND TIME PLOTTED: 09-JUL-1997 14:15
DESIGN FILE: I:\designs\hhaw\str\HHAWSA1S.dgn

DATE AND TIME PLOTTED: 09-JUL-1997 14:15
DESIGN FILE: I:\designs\hhaw\str\HHAWSA1S.dgn

REVISIONS				
SYMBOL	ZONE	DESCRIPTION	DATE	BY

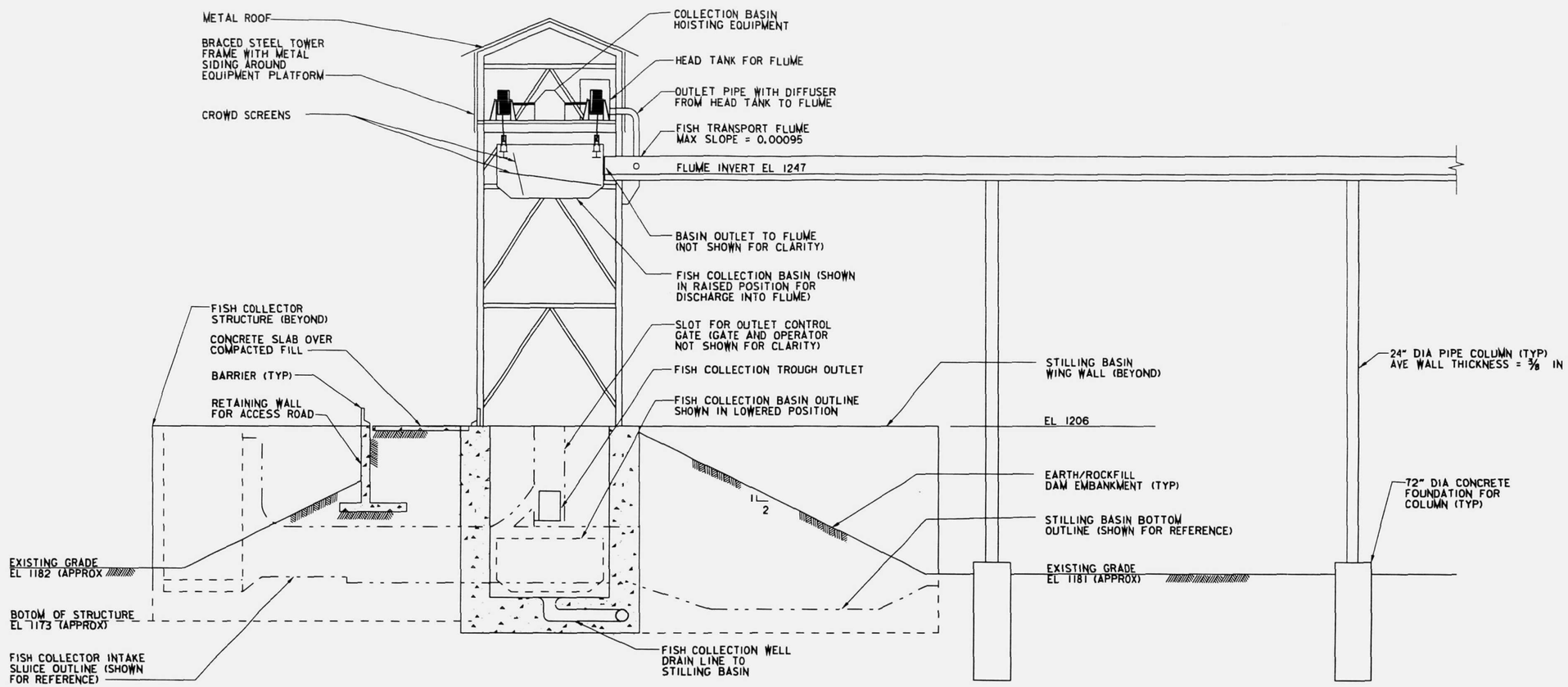

SECTION

SCALE: 1" = 10'

G
S-37

FLUME SUPPORT SCHEDULE		
COLUMN HEIGHT	FOUNDATION DEPTH	NUMBER REQUIRED
0	5'-0"	191
8'-0"	10'-0"	42
10'-0"	10'-0"	100
30'-0"	15'-0"	42
40'-0"	15'-0"	84
55'-0"	20'-0"	50
65'-0"	20'-0"	25

1" = 10' 10' 5' 0 10' 20'

REDUCED TO 50% OF FULL SIZE

U.S. ARMY ENGINEER DISTRICT, SEATTLE
CORPS OF ENGINEERS
SEATTLE, WASHINGTON

HOWARD HANSON DAM
ADDITIONAL WATER STORAGE PROJECT

UPSTREAM COLLECTION FACILITY
ALTERNATE 9B2
SECTION

GREEN RIVER WASHINGTON

SIZE	INVITATION NO.	FILE NO.	DATE:	PLATE
D		E-56-14-17	97JUL14	S.49
DSGN. FRAGOMELI		CHK. NOYES	SHEET 50 OF 50	

DATE AND TIME PLOTTED: 09-JUL-1997 14:18
DESIGN FILE: I:\designs\hhaw\str\HHAWSAIT.dgn

DATE AND TIME PLOTTED: 09-JUL-1997 14:18
DESIGN FILE: I:\designs\hhaw\str\HHAWSAIT.dgn