US Army Corps of Engineers
Seattle District

WASHINGTON STATE DEPARTMENT OF ECOLOGY

Joint Public Notice

Application for a Department of the Army Permit and a Washington Department of Ecology Water Quality Certification and/or Coastal Zone Management Consistency Concurrence – ERRATUM/REVISION

US Army Corps of Engineers
Regulatory Branch
Post Office Box 3755
Seattle, WA 98124-3755
Telephone (206) 764-6904
Attn: Pamela Sanguinetti,
Project Manager

WA Department of Ecology
SEA Program
Post Office Box 47600
Olympia, WA 98504-7600
Telephone (360) 407-6068
Attn: SEA Program, Federal Permit Coordinator

Erratum Date: November 3, 2014

Public Notice Date: March 15, 2013
Expiration Date: April 14, 2014

Reference No.: NWS-2012-1258
Name: Bel Lago Condominiums, LLC

Interested parties are hereby notified that the U.S. Army Corps of Engineers (Corps) and the Washington Department of Ecology (Ecology) have received a revised application to perform work in waters of the United States as described below and shown on the enclosed drawings dated October 23, 2014. The work was previously described in Public Notice Reference Number NWS-2012-1258, dated March 15, 2014.

The Corps will review the work in accordance with Section 404 of the Clean Water Act (CWA) and Section 10 of the Rivers and Harbors Act. Ecology will review the work pursuant to Section 401 of the CWA, with applicable provisions of State water pollution control laws and the Coastal Zone Management Act.

ERRATUM/REVISION: This erratum revises the contact information and project description on a Corps/Ecology Joint Public Notice dated March 15, 2013.

The corrected information is as follows:

APPLICANT: Waterfront II, LLC
Attention: Mr. Ken Nelson
9805 Northeast 116th Street
Kirkland, Washington 98034
Telephone: (425) 298-0980

AGENT: Ecco Design, Inc.
Attention: Mr. Troy Hussing
203 North 36th Street, Suite 301
Seattle, Washington 98103
Telephone: (206) 706-3907

Remove two existing piers with 1,758 square feet (sf) of over-water coverage and 30 support piles. Also remove an existing boat ramp and three mooring piles. Construct a new joint-use pier with 2,342 sf of over-water coverage and 46 six-inch-diameter steel support piles. Twenty-two free-standing boat lifts will be installed. The surface of the pier will be grated.

Thirty-five cubic yards of spawning gravel for beach nourishment will be placed and 2,903 sf of riparian vegetation installed for mitigation.

All other information shown on Public Notice NWS-2012-1258 remains unchanged.

COMMENT AND REVIEW PERIOD: Conventional mail or e-mail comments on this public notice will be accepted and made part of the record and will be considered in determining whether it would be in the public interest to authorize this proposal. In order to be accepted, e-mail comments must originate from the author's e-mail account and must include on the subject line of the e-mail message the permit applicant's name and reference number as shown below. Either conventional mail or e-mail comments must include the permit applicant's name and reference number, as shown below, and the commentator's name, address, and phone number. All comments whether conventional mail or e-mail must reach this office, no later than the expiration date of this public notice to ensure consideration.

CORPS COMMENTS: All e-mail comments should be sent to pamela.sanguinetti@usace.army.mil. Conventional mail comments should be sent to: U.S. Army Corps of Engineers, Regulatory Branch,
Attention: Ms. Pamela Sanguinetti, P.O. Box 3755, Seattle, Washington 98124-3755. All comments received will become part of the administrative record and are subject to public release under the Freedom of Information Act including any personally identifiable information such as names, phone numbers, and addresses.

ECOLOGY COMMENTS: Any person desiring to present views on the project pertaining to a request for water quality certification under Section 401 of the CWA and/or Coastal Zone Management consistency concurrence, may do so by submitting written comments to the following address: Washington State Department of Ecology, Attention: Federal Permit Coordinator, P.O. Box 47600, Olympia, Washington 98504-7600, or e-mail to ecyrefedpermits@ecy.wa.gov.

To ensure proper consideration of all comments, responders must include the following name and reference number in the text of their comments: Bel Lago Condominiums, LLC; NWS-2012-1258

Encl: Figures (16)

PROJECT INFORMATION

OWNER:
WATERFRONT II. LLC.
KEN NELSON
9123 NE JUANITA DRIVE
KIRKLAND, WA 98034
425-298-0980

SITE ADDRESS:
9049 & 9123 NE JUANITA DR.
KIRKLAND, WA 98034

PARCEL NUMBER:
3760500005 & 3760500010

BODY OF WATER:
LAKE WASHINGTON

LEGAL DESCRIPTION:
JUANITA POINT A RESIDENCE PARK LESS BLK O LAKE WASH SH LDS TGW UND INT IN COMMUNITY BEACH FOR ASSESSMENT PURPOSES ONLY LESS POR FOR RD PER REC # 20040709000554

PROJECT DESCRIPTION:
INSTALL NEW SHARED PIER. DEMOLISH TWO EXISTING PIERS (APPROX. 1,758 SF OF OVER WATER COVERAGE) WITH 30 PILES. REMOVE THREE EXISTING MOORING PILES. CONSTRUCT A NEW SHARED PIER (APPROX. 2,342 SQUARE FEET OF OVER WATER COVERAGE) WITH 46 STEEL PILES (6" DIAM. - QTY 46). GRATED DECKING WILL BE USED TO DECK THE ENTIRE SURFACE OF THE PROPOSED PIER. INSTALL 22 BOAT LIFTS AT THE PROPOSED PIER. PLANT NATIVE SHORELINE VEGETATION PER THE PLANTING PLAN.

VICINITY MAP

PURPOSE: Boat Moorage

DATUM: C.O.E. Locks Datum
Est. 1919

ADJACENT PROPERTY OWNERS:
1. Rose Point Condominiums
2. Juanita Bay Condominiums

NAME: Bel Lago Condominiums, L.L.C.

REFERENCE #:

SITE LOCATION ADDRESS:
9123 NE Juanita Drive
Kirkland, WA 98034

PROPOSED: Shared Pier & Boat Lifts
IN: Lake Washington
AT: Kirkland
COUNTY: King **STATE**: WA

SHEET 1 of 16

DATE: February 19, 2013
REV: September 11, 2014
REV: October 23, 2014

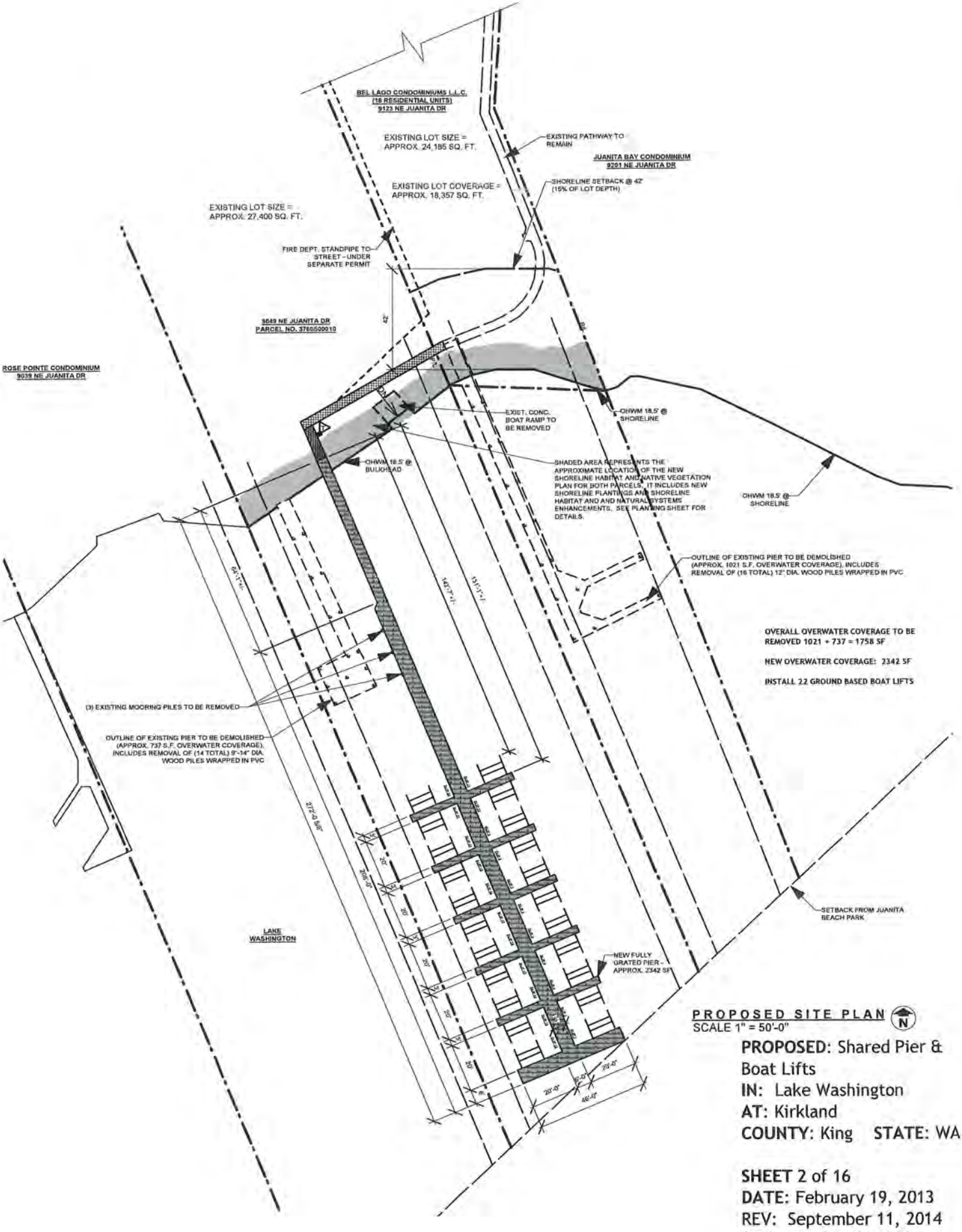

PROPOSED SITE PLAN
SCALE 1" = 50'-0"

PROPOSED: Shared Pier & Boat Lifts
IN: Lake Washington
AT: Kirkland
COUNTY: King **STATE:** WA

SHEET 2 of 16
DATE: February 19, 2013
REV: September 11, 2014
REV: October 21, 2014

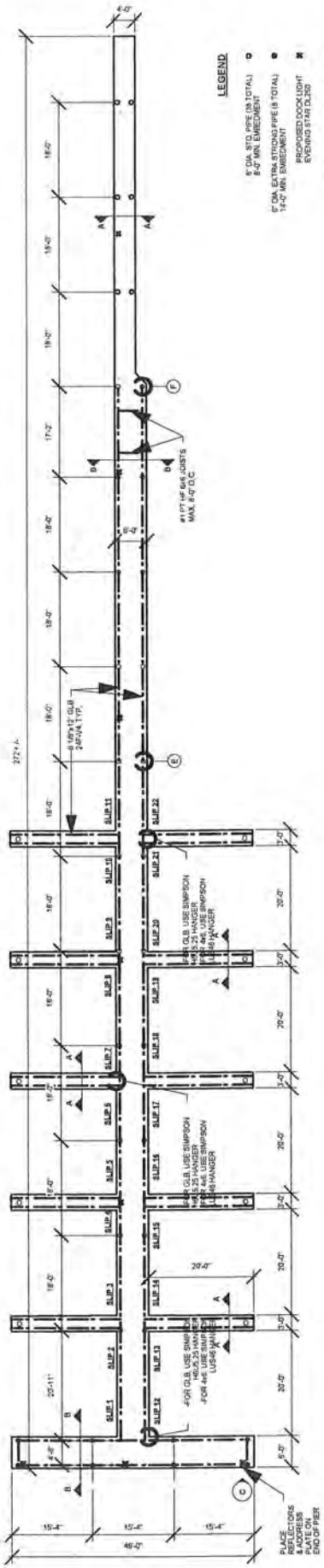

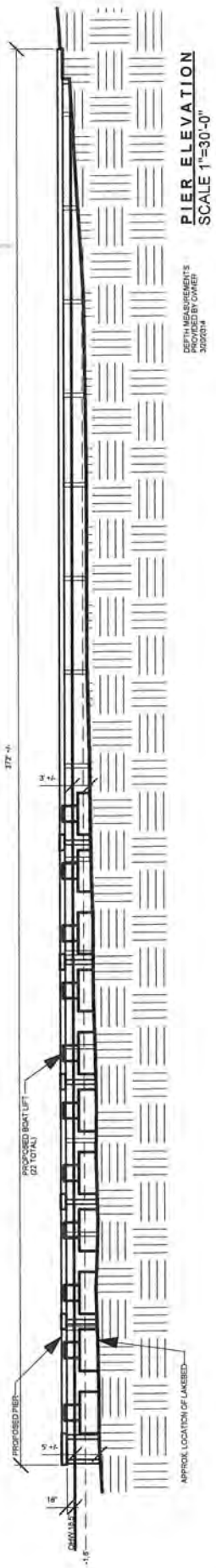

PROPOSED: Shared Pier & Boat Lifts
IN: Lake Washington
AT: Kirkland
COUNTY: King **STATE:** WA

SHEET 3 of 16

DATE: February 19, 2013
REV: September 11, 2014
REV: October 21, 2014

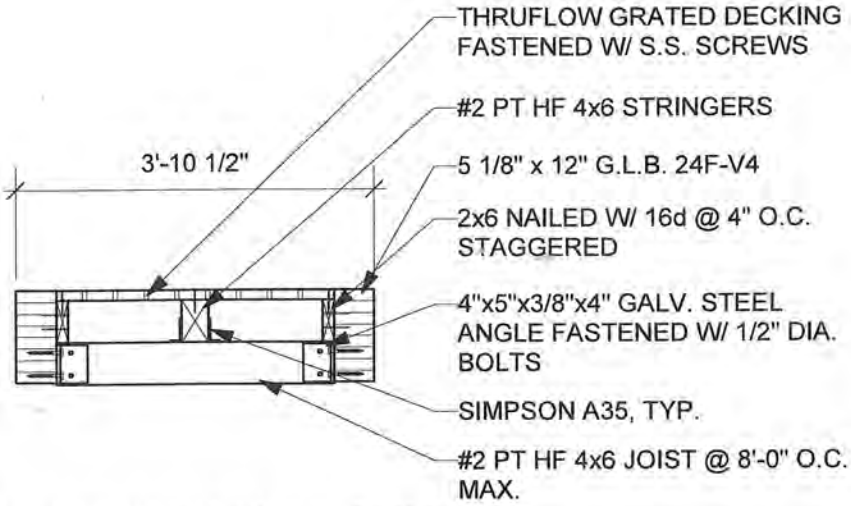

A-A MIDSPAN SECTION

SCALE 1/2" = 1'-0"

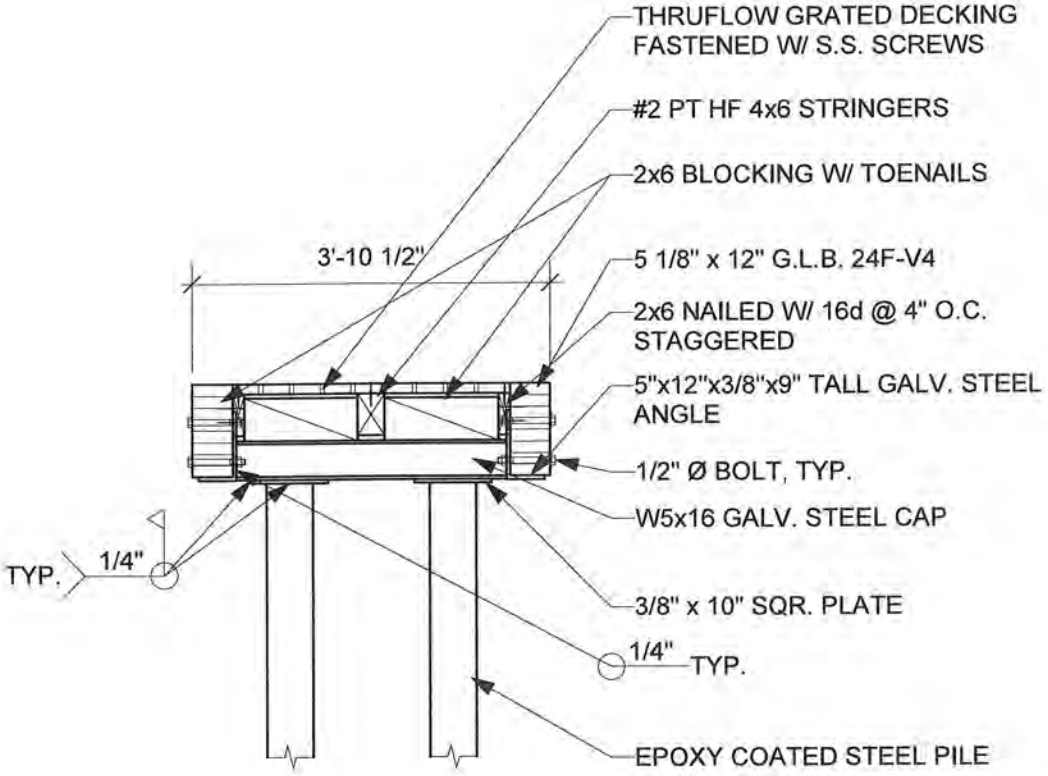

A-A PILE CAP SECTION

SCALE 1/2" = 1'-0"

PROPOSED: Shared Pier & Boat Lifts
IN: Lake Washington
AT: Kirkland
COUNTY: King **STATE:** WA

SHEET 4 of 16

DATE: February 19, 2013
REV: September 11, 2014
REV: October 21, 2014

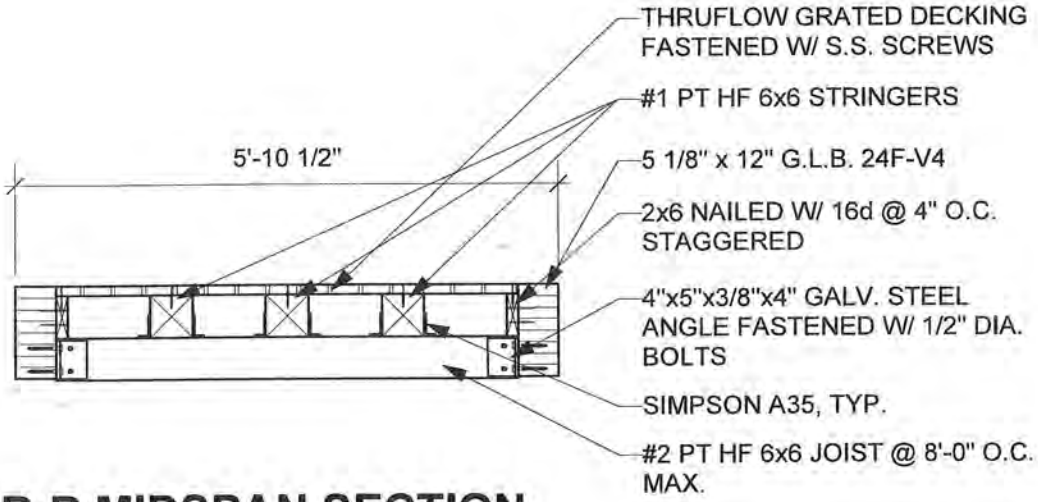

B-B MIDSPAN SECTION

SCALE 1/2" = 1'-0"

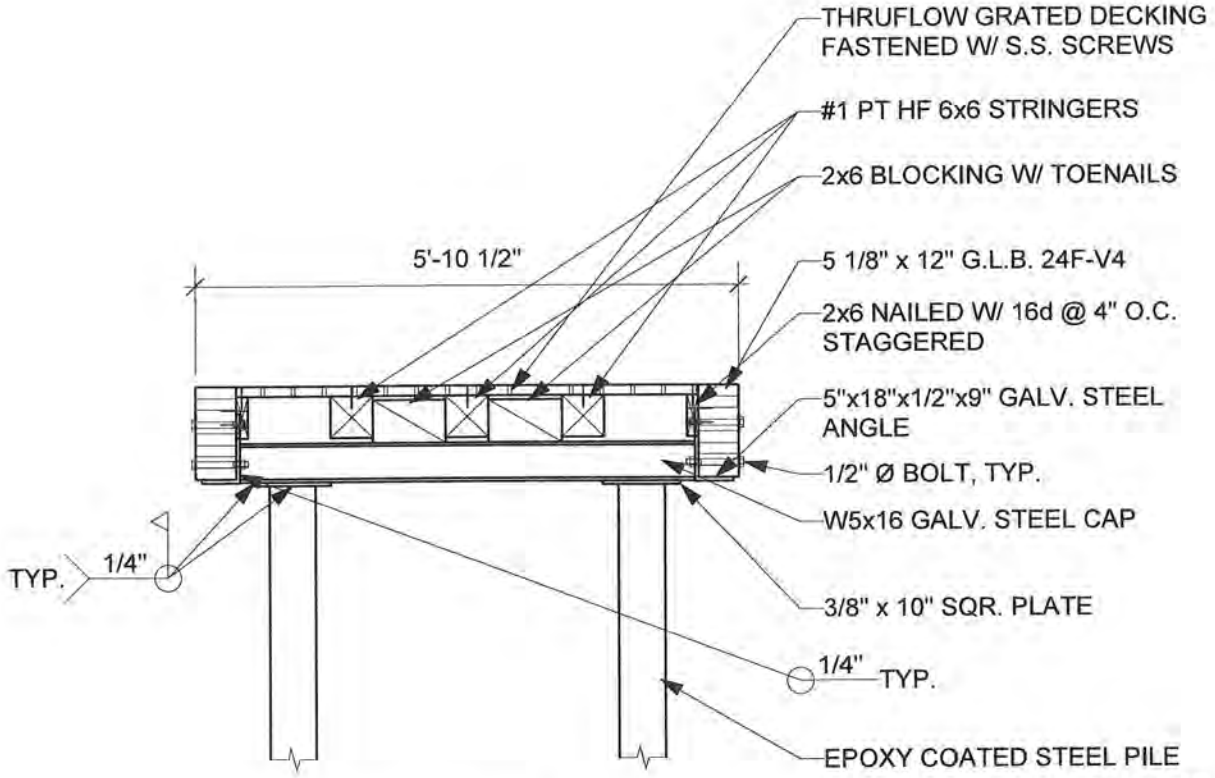

B-B PILE CAP SECTION

SCALE 1/2" = 1'-0"

PROPOSED: Shared Pier & Boat Lifts
IN: Lake Washington
AT: Kirkland
COUNTY: King **STATE:** WA

SHEET 5 of 16

DATE: February 19, 2013
REV: September 11, 2014
REV: October 21, 2014

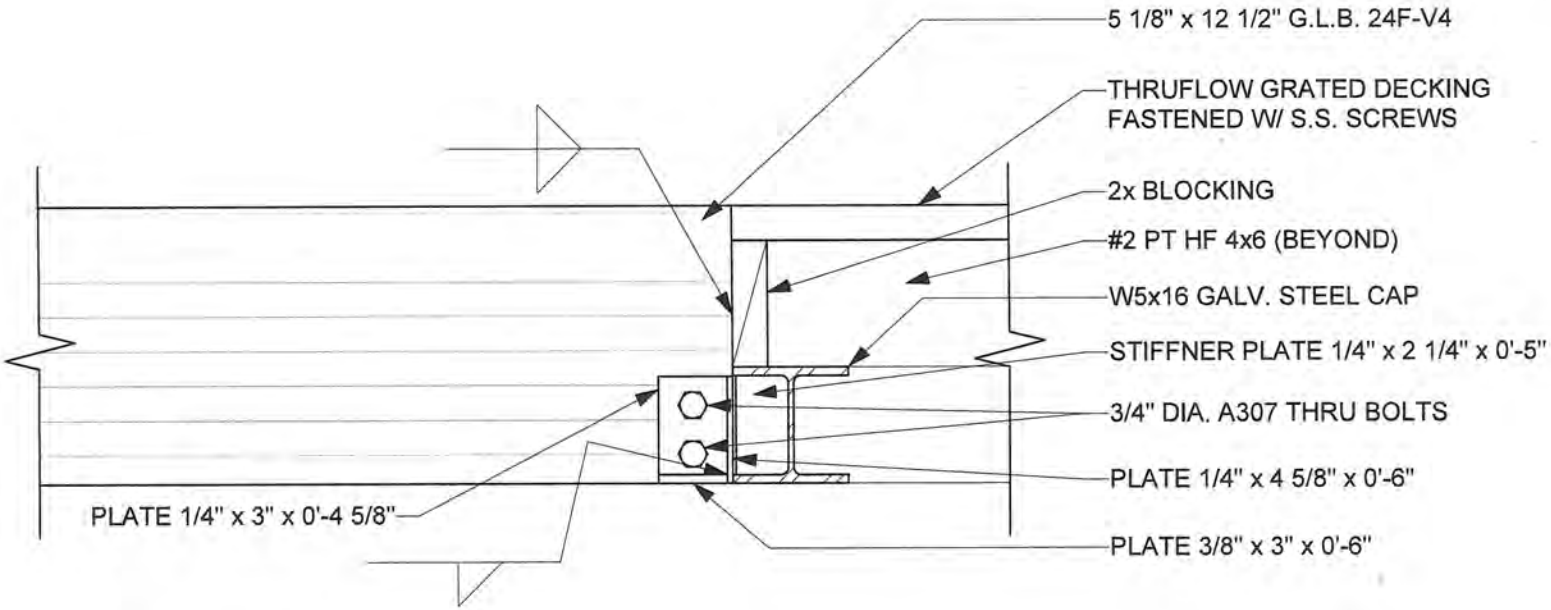

F WOOD GIRDER TO STEEL CAP CONNECTION

SCALE 1 1/2" = 1'-0"

PROPOSED: Shared Pier & Boat Lifts
IN: Lake Washington
AT: Kirkland
COUNTY: King **STATE:** WA

SHEET 6 of 16

DATE: February 19, 2013
REV: September 11, 2014
REV: October 21, 2014

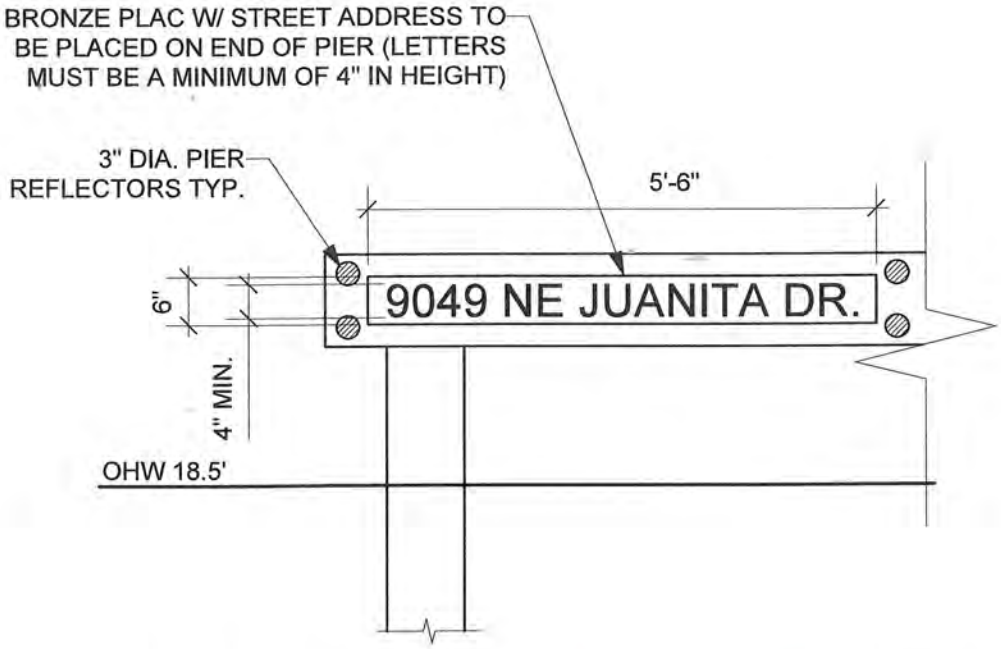

ELEVATION C - ADDRESS PLATE DETAIL

SCALE 1/2" = 1'-0"

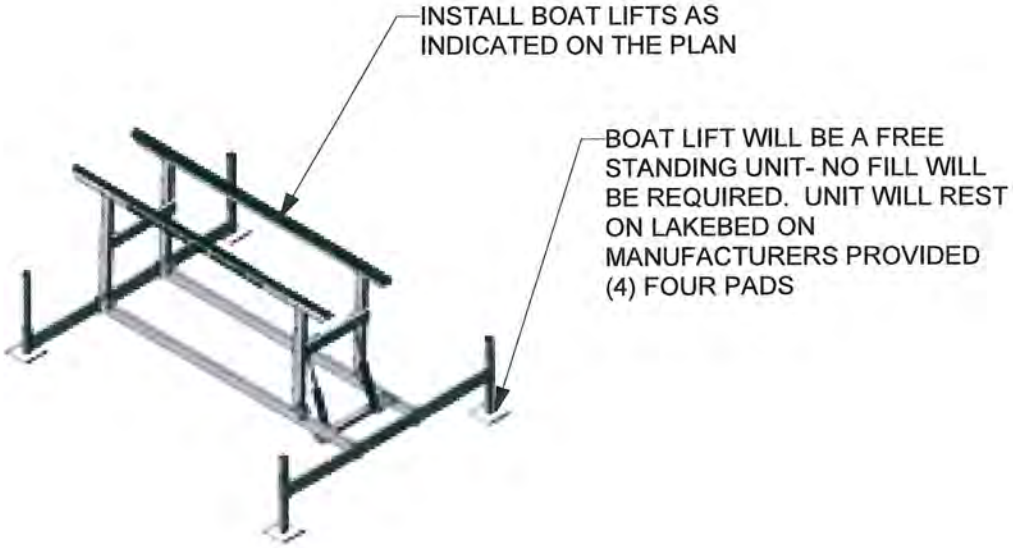

GROUND BASED BOATLIFT DETAIL

NO SCALE

PROPOSED: Shared Pier & Boat Lifts
IN: Lake Washington
AT: Kirkland
COUNTY: King **STATE:** WA

SHEET 7 of 16

DATE: February 19, 2013
REV: September 11, 2014
REV: October 21, 2014

MITIGATION, MONITORING AND MAINTENANCE NOTES

MITIGATION SEQUENCE:

1. THE LANDSCAPE CONTRACTOR SHALL LOCATE ALL EXISTING UTILITIES WITHIN THE LIMIT OF WORK AND IS RESPONSIBLE FOR ANY DAMAGE AS A RESULT OF THE LANDSCAPE CONSTRUCTION.
2. REMOVE ANY AND ALL INVASIVE WEEDS FROM THE MITIGATION PLANTING AREAS PRIOR TO PLANT INSTALLATION. CARE SHOULD BE TAKEN TO PROTECT EXISTING TREES AND VEGETATION TO REMAIN.
3. NEWLY INSTALLED PLANTS SHOULD RECEIVE AT LEAST 1" OF WATER PER WEEK DURING SUMMER MONTHS. INSTALL A BIDDER DESIGNED IRRIGATION SYSTEM.
4. SOIL WITHIN THE PLANTING AREAS SHALL BE AMENDED AS FOLLOWS:
   A. UPLAND PLANTING AREAS: THESE AREAS ARE TO BE ROTOTILLED/SCARIFIED TO A DEPTH OF 6". ALL LARGE ROCKS AND OTHER DEBRIS ARE TO BE REMOVED. 4" DEPTH OF 2-WAY TOPSOIL IS TO BE INCORPORATED INTO THE SUBGRADE. LIGHTLY COMPACT AND ADD TOPSOIL TO BRING LEVEL UP TO EXISTING FINISH GRADE.
   B. FRONT OF BULKHEAD PLANTING AREAS: DO NOT DISTURB EXISTING SOILS IN THESE BEDS AND DO NOT MULCH. INSTALL PLANTS DIRECTLY INTO EXISTING SUBSTRATE AFTER REMOVING INVASIVE WEEDS.
5. LAYOUT PLANT MATERIAL PER PLAN FOR INSPECTION BY THE LANDSCAPE ARCHITECT. PLANT SUBSTITUTIONS WILL NOT BE ALLOWED WITHOUT THE APPROVAL OF THE LANDSCAPE ARCHITECT.
6. INSTALL PLANTS INTO PREPARED BEDS USING APPROVED AND MOST RECENT ANSI STANDARDS FOR CONTAINER PLANT INSTALLATION.
7. WATER EACH PLANT THOROUGHLY.
8. AFTER PLANT INSTALLATION, MULCH ALL OF THE UPLAND PLANTING BEDS WITH 3" OF WOOD CHIP MULCH.

MONITORING PROTOCOL:

AN AS-BUILT PLAN WILL BE PREPARED THAT DOCUMENTS THE INSTALLATION OF THE SHORELINE PLANTING PLAN. ANY MINOR CHANGES TO THE APPROVED PLAN THAT ARE REQUIRED BY FIELD CONDITIONS WILL BE NOTED ON THE AS-BUILT PLAN.

THE MONITORING PERIOD BEGINS ONCE THE AS-BUILT PLAN HAS BEEN APPROVED. MONITORING VISITS IN YEARS 1 THROUGH 5 SHALL OCCUR BETWEEN JULY 1 AND SEPTEMBER 15. DURING EACH MONITORING VISIT, COLOR PHOTOGRAPHS WILL BE TAKEN FROM POINTS IDENTIFIED ON THE AS-BUILT PLAN THAT PROVIDE COMPLETE REPRESENTATION OF THE VEA. IN ADDITION, THE PLANTING AREA WILL BE EXAMINED AND THE FOLLOWING ITEMS NOTED:
1. THE PERCENT SURVIVAL OF EACH PLANTED SPECIES
2. ESTIMATE OF COVER BY PERCENTAGE FOR PERENNIALS, FERNS, EMERGENTS AND OTHER GROUNDCOVER; ESTIMATE OF COVER BY PERCENTAGE FOR INVASIVE SPECIES.
3. NOTES ABOUT NATIVE VOLUNTEERS WHICH CAN BE COUNTED TOWARDS THE PERCENT SURVIVAL ABOVE IN #1.
4. THE GENERAL HEALTH OF VEGETATION, NOTING WHETHER PESTS OR DISEASE ARE PRESENT.

PROPOSED: Shared Pier & Boat Lifts
IN: Lake Washington
AT: Kirkland
COUNTY: King **STATE:** WA

DATE: February 19, 2013
REV: September 11, 2014
REV: October 21, 2014

MITIGATION, MONITORING AND MAINTENANCE NOTES CONT.

ANNUAL MONITORING PROTOCOL ARMY CORP:

IMPACT REDUCTION REPORTS MUST BE SUBMITTED TO THE CORPS FOR ALL PROJECTS AS FOLLOWS:

A. A STATUS REPORT ON IMPACT REDUCTION CONSTRUCTION, INCLUDING AS-BUILT DRAWINGS, MUST BE SUBMITTED TO THE CORPS 12 MONTHS FROM THE DATE THE CORPS ISSUES permit TO THE PERMITTEE. STATUS REPORTS ON IMPACT REDUCTION CONSTRUCTION WILL BE DUE ANNUALLY TO THE CORPS UNTIL THE CORPS ACCEPTS THE AS-BUILT DRAWINGS. THE PERMITTEE CAN MEET THIS REPORTING REQUIREMENT BY SUBMITTING TO THE CORPS A COMPLETED STATUS REPORT FOR IMPACT REDUCTION CONSTRUCTION, FOUND IN APPENDIX D.

B. FOR IMPACT REDUCTION PLANTING, MONITORING REPORTS WILL BE DUE ANNUALLY FOR 5 YEARS FROM THE DATE THE CORPS ACCEPTS THE AS-BUILT DRAWINGS. THE IMPACT REDUCTION MONITORING REPORT WILL INCLUDE WRITTEN AND PHOTOGRAPHIC DOCUMENTATION ON TREE AND SHRUB MORTALITY AND REPLANTING EFFORTS. THE PERMITTEE CAN MEET THIS REPORTING REQUIREMENT BY SUBMITTING TO THE CORPS A COMPLETED IMPACT REDUCTION MONITORING REPORT, FOUND IN APPENDIX E.

ANNUAL MONITORING PROTOCOL CITY OF KIRKLAND:

ANNUAL MONITORING REPORTS FOR FIVE (5) YEARS, THAT INCLUDE WRITTEN AND PHOTOGRAPHIC DOCUMENTATION ON TREE AND SHRUB MORTALITY, SUBJECT TO THE FOLLOWING SUCCESS CRITERIA:

1. ONE HUNDRED (100) PERCENT SURVIVAL OF ALL PLANTED NATIVE TREES AND SHRUBS DURING HE FIRST TWO (2) YEARS AFTER PLANTING; AND
2. ONE HUNDRED (100) PERCENT SURVIVAL OF TREES AND 80 PERCENT SURVIVAL OF REMAINING NATIVE PLANTS IN YEARS THREE (3) THROUGH FIVE (5).

COPIES OF REPORTS THAT ARE SUBMITTED TO STATE OR FEDERAL AGENCIES IN COMPLIANCE WITH PERMIT APPROVALS MAY BE SUBMITTED IN LIEU OF A SEPARATE REPORT TO THE CITY, PROVIDED THAT THE REPORTS ADDRESS A 5-YEAR MAINTENANCE AND MONITORING PLAN.

WOODY DEBRIS EXISTING ON-SITE OR CONTRIBUTED TO THE SITE AS PART OF THE MITIGATION EFFORTS SHALL NOT BE REMOVED.

MAINTENANCE:

MAINTENANCE OF THE SHORELINE PLANTINGS DURING THE FIVE-YEAR MONITORING PERIOD SHALL BE CONDUCTED BY THE OWNER.

MAINTENANCE SHALL INCLUDE:
- REMOVAL AND REPLACEMENT OF DEAD OR DYING PLANTS
- WEEDING OF NON-NATIVE INVASIVE SPECIES, AND WATERING
- MAINTENANCE SHALL NOT INCLUDE APPLICATION OF TOXIC CHEMICAL TREATMENTS

PROPOSED: Shared Pier & Boat Lifts
IN: Lake Washington
AT: Kirkland
COUNTY: King **STATE**: WA

DATE: February 19, 2013
REV: September 11, 2014
REV: October 21, 2014

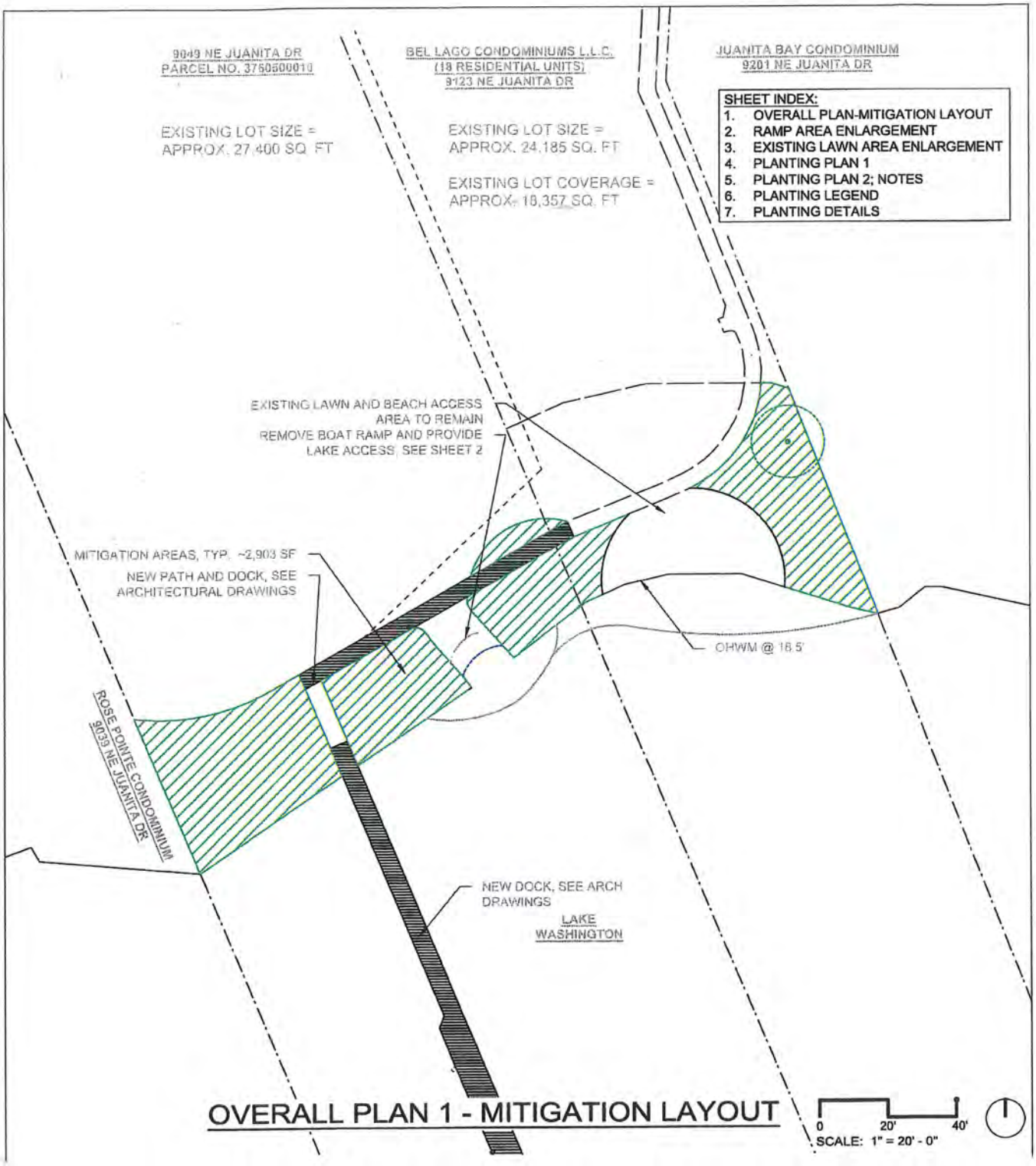

PROPOSED: Shared Pier & Boat Lifts
IN: Lake Washington
AT: Kirkland
COUNTY: King **STATE:** WA

SHEET 10 of 16

DATE: February 19, 2013
REV: September 11, 2014
REV: October 21, 2014

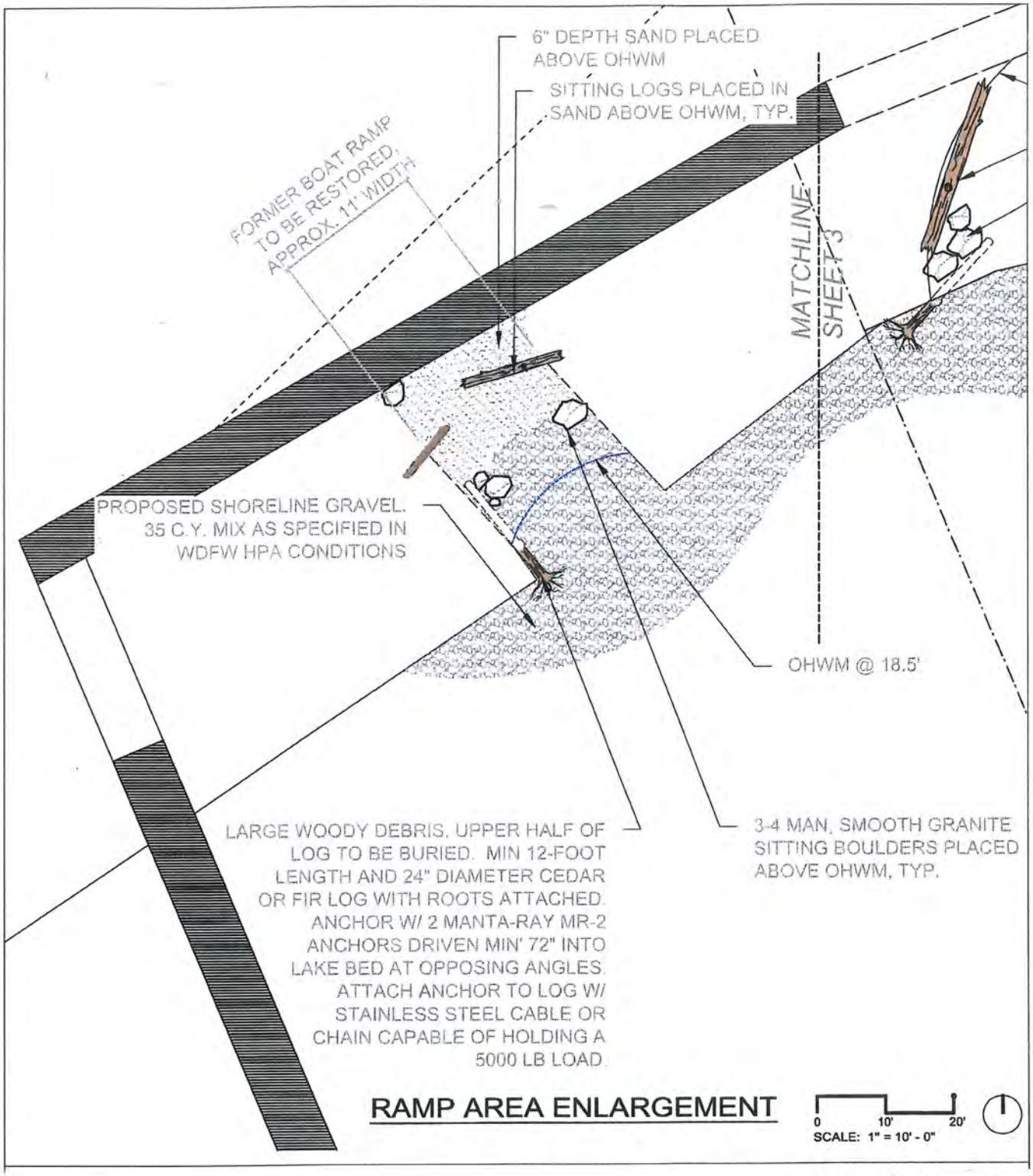

PROPOSED: Shared Pier & Boat Lifts
IN: Lake Washington
AT: Kirkland
COUNTY: King **STATE:** WA

SHEET 11 of 16

DATE: February 19, 2013
REV: September 11, 2014
REV: October 21, 2014

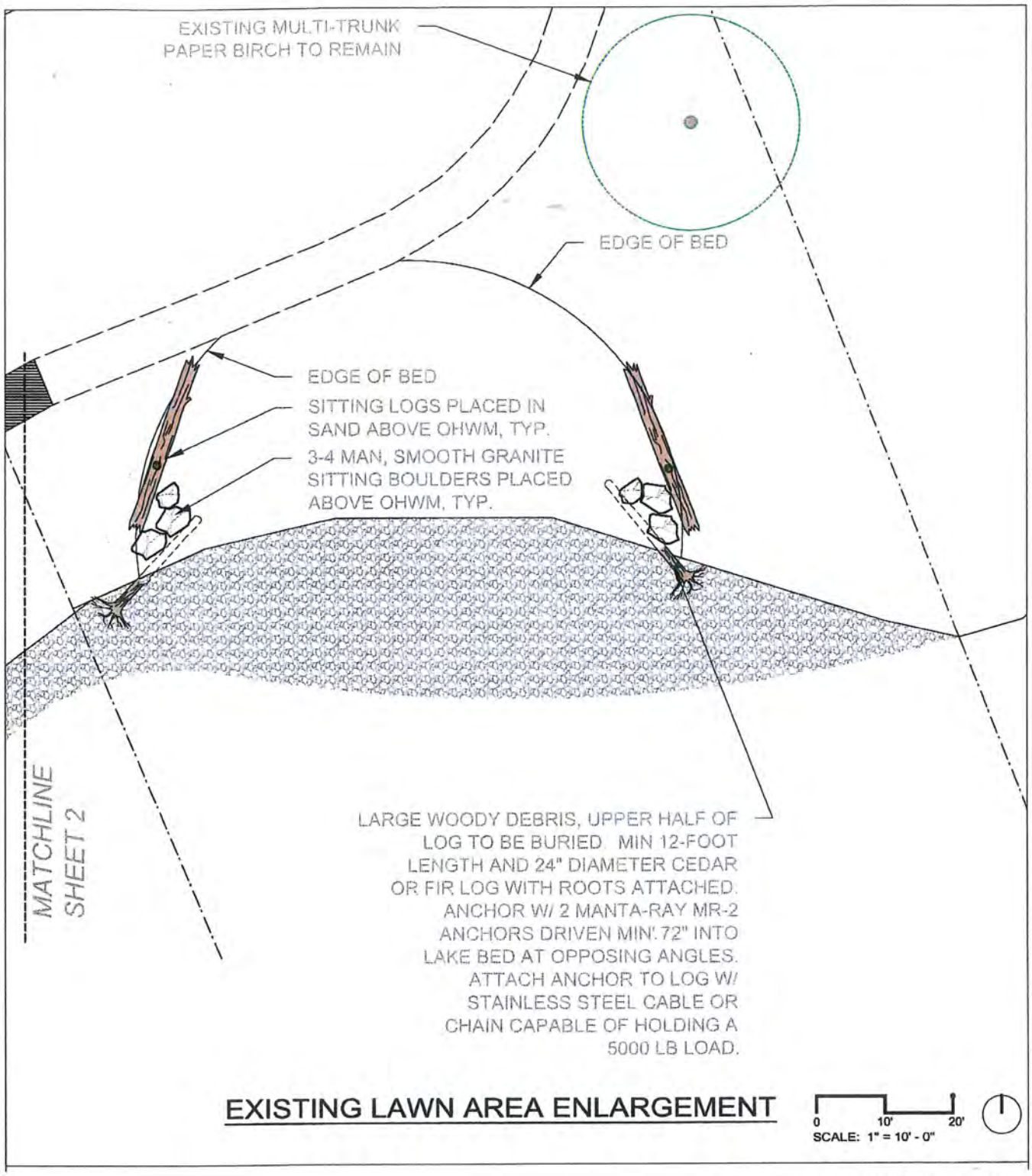

PROPOSED: Shared Pier & Boat Lifts
IN: Lake Washington
AT: Kirkland
COUNTY: King **STATE:** WA

SHEET 12 of 16

DATE: February 19, 2013
REV: September 11, 2014
REV: October 21, 2014

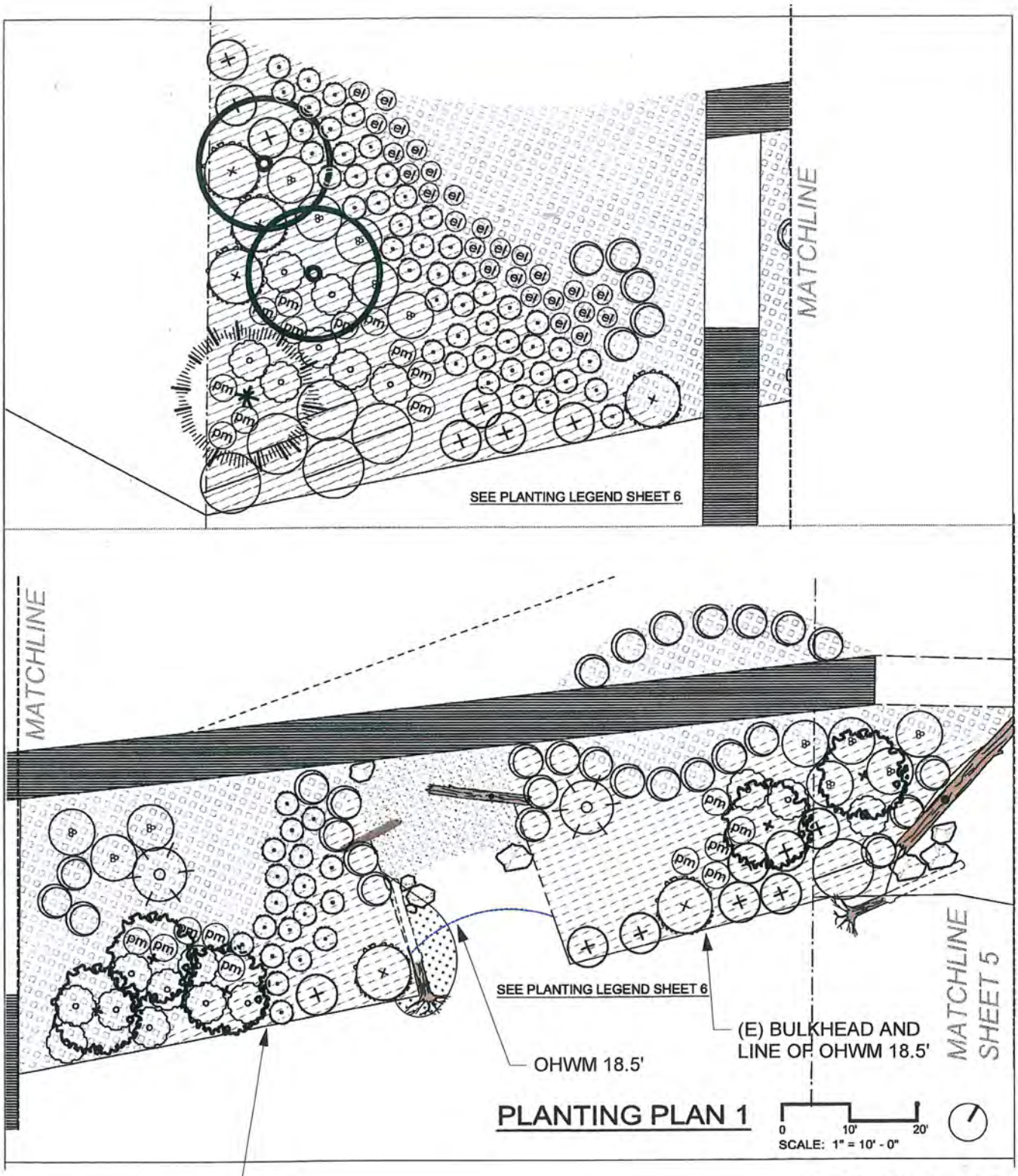

(E) BULKHEAD AND
LINE OF OHWM 18.5'

PROPOSED: Shared Pier & Boat Lifts
IN: Lake Washington
AT: Kirkland
COUNTY: King **STATE:** WA

SHEET 13 of 16

DATE: February 19, 2013
REV: September 11, 2014
REV: October 21, 2014

PLANTING NOTES

1. Prior to planting, the site must be completely weed-free.
2. The landscape contractor shall locate all existing utilities within the limit of work and is responsible for any damage as a result of the landscape construction.
3. Newly installed plants should receive at least 1" of water per week during summer months. Install a bidder-designed irrigation system.
4. Soil within the planting areas shall be amended as follows:
   - Typical planting areas: These areas are to be rototilled/scarified to a depth OF 7" where possible. All large rocks, concrete pieces, and other debris shall be removed.
   - Backfill to finish grade with 2-way topsoil.
   - Lightly compact and add 3" depth wood chip much after planting..
6. Layout plant material per plan for inspection by the landscape architect. Plant substitutions will not be allowed without the approval of the landscape architect.
7. Water each plant thoroughly immeadiatly after installation. Test and commission bidder-designed irrigation system prior each year prior to June 1.

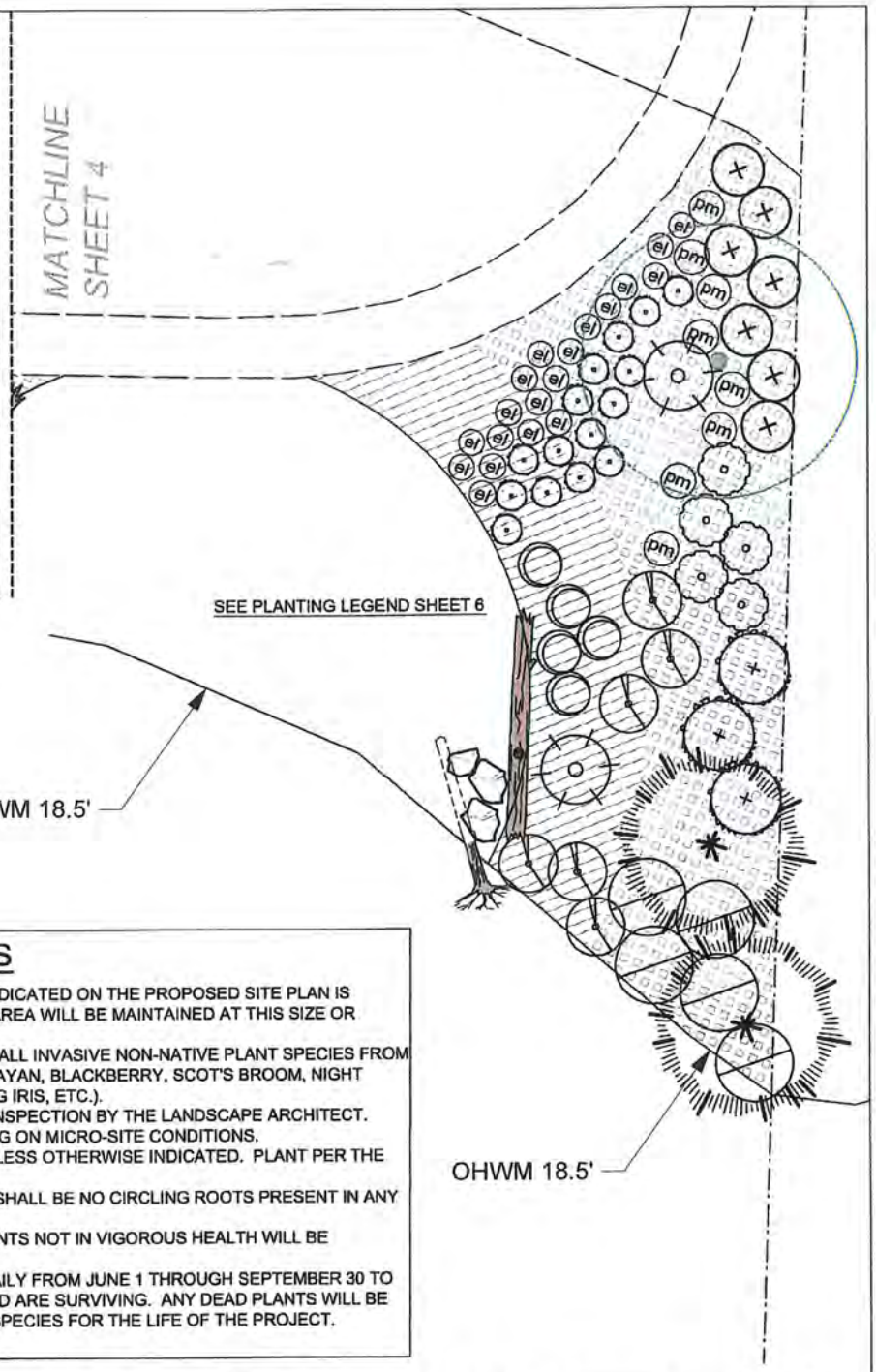

MITIGATION PLAN NOTES

1. THE NATIVE VEGETATION PLANTING AREA INDICATED ON THE PROPOSED SITE PLAN IS PROVIDED AS MITIGATION. THIS PLANTING AREA WILL BE MAINTAINED AT THIS SIZE OR LARGER FOR THE LIFE OF THE PROJECT.
2. PRIOR TO INSTALLATION, REMOVE ANY AND ALL INVASIVE NON-NATIVE PLANT SPECIES FROM THE AREA (KNOTWEED, ENGLISH IVY, HIMALAYAN, BLACKBERRY, SCOT'S BROOM, NIGHT SHADE, REED CANARY GRASS, YELLOW FLAG IRIS, ETC.).
3. PRIOR TO PLANTING, LAYOUT PLANTS FOR INSPECTION BY THE LANDSCAPE ARCHITECT. PLANTS MAY BE FIELD ADJUSTED DEPENDING ON MICRO-SITE CONDITIONS.
4. PROVIDE CONTAINERIZED PLANTS ONLY UNLESS OTHERWISE INDICATED. PLANT PER THE PLANTING DETAILS ON SHEET 6.
5. PLANTS SHALL NOT BE POT-BOUND; THERE SHALL BE NO CIRCLING ROOTS PRESENT IN ANY PLANT.
6. TREES WITH BROKEN LEADERS AND/OR PLANTS NOT IN VIGOROUS HEALTH WILL BE REJECTED
7. THE PLANTING AREA SHALL BE WATERED DAILY FROM JUNE 1 THROUGH SEPTEMBER 30 TO ENSURE THE PLANTS HAVE TAKEN ROOT AND ARE SURVIVING. ANY DEAD PLANTS WILL BE REPLACED WITH SAME OR SIMILAR NATIVE SPECIES FOR THE LIFE OF THE PROJECT.

PLANTING PLAN 2; NOTES

0 10' 20'
SCALE: 1" = 10' - 0"

PROPOSED: Shared Pier & Boat Lifts
IN: Lake Washington
AT: Kirkland
COUNTY: King **STATE**: WA

SHEET 14 of 16

DATE: February 19, 2013
REV: September 11, 2014
REV: October 21, 2014

PLANTING LEGEND

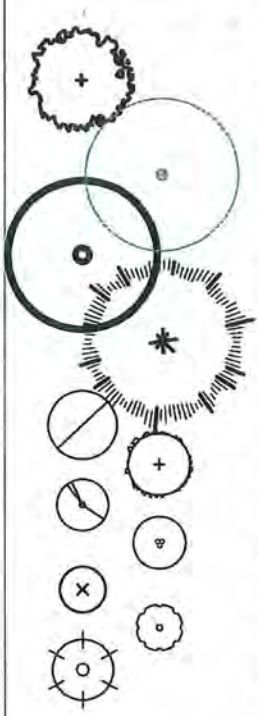

Type	Botanical Name	Common Name	Quantity	Size	Spacing or Notes
Tree-D.	*Acer circinatum*	Vine maple	5	5 Gal.	Multistem
Tree-D.	*Betula papyrifera*	Paper Birch	1	EX.	Existing multi-trunk birch to remain
Tree-D.	*Betula papyrifera*	Paper Birch	2	5 Gal.	Single trunk
Tree-Ev.	*Thuja plicata*	Western Redcedar	3	60" Ht. min	Well branched, full
		Tree Total	11		
Shrub-D.	*Cornus sericea*	Red-osier dogwood	11	2 or 5 Gal.	All shrubs full an vigorous
Shrub-D.	*Holodiscus discolor*	Ocean spray	8	2 or 5 Gal.	
Shrub-D.	*Physocarpus capitatus*	Pacific ninebark	6	2 or 5 Gal.	
Shrub-D.	*Ribes sanguineum*	Red flowering currant	13	2 or 5 Gal.	
Shrub-D.	*Symporocarpus albus*	Snowberry	22	2 or 5 Gal.	
Shrub-Ev.	*Vacinnium ovatum*	Evergreen huckleberry	24	2 or 5 Gal.	
Shrub-D.	*Viburnum edule*	Highbush cranberry	4	2 or 5 Gal.	
		Shrub Total	88		
Type	**Botanical Name**	**Common Name**	**Quantity**	**Size**	**Spacing or Notes**
Emergent	*Carex obnupta*	Slough sedge	25	Plug	Group emergents together
Emergent	*Juncus ensifolius*	Daggerleaf rush	25	Plug	and plant at 12" O.C.
Emergent	*Schoenoplectus acutus*	Hardstem bulrush	25	Plug	throughout area shown
		Cutting Total	75		on plan
Fern	*Polystichum munitum*	Western Sword Fern	28	4" Pots	
		Fern Total	28		
Perennial	*Eriophyllum lanatum*	Oregon Sunshine	45	4" Pots	
Grasses	*Deschampsia cespitosa*	Tufted hairgrass	81	4" Pots	
Grasses	*Elymus mollis*	Dunegrass	38	1 Gal	
		Perennial/Grass Total	164		
G.cover	*Arctostaphylos uva-ursi*	Kinikinnick	216	2"-4" pots	18" O.C. spacing
G.cover	*Fragaria chiloensis*	Sand strawberry	216	2"-4" pots	24" On-Center spacing
		Groundcover Total	432		

PLANTING LEGEND

0 10' 20'
SCALE: 1" = 10' - 0"

PROPOSED: Shared Pier & Boat Lifts
IN: Lake Washington
AT: Kirkland
COUNTY: King **STATE:** WA

SHEET 15 of 16

DATE: February 19, 2013
REV: September 11, 2014
REV: October 21, 2014

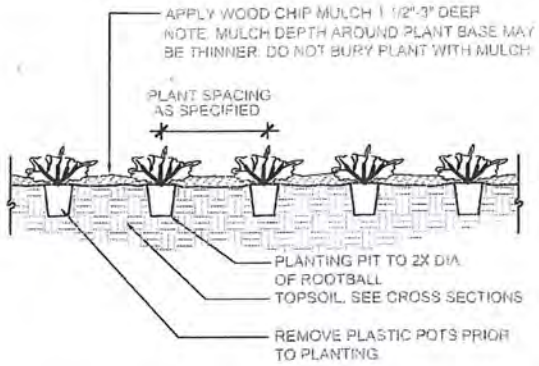

(A) GROUNDCOVER PLANTING
NTS

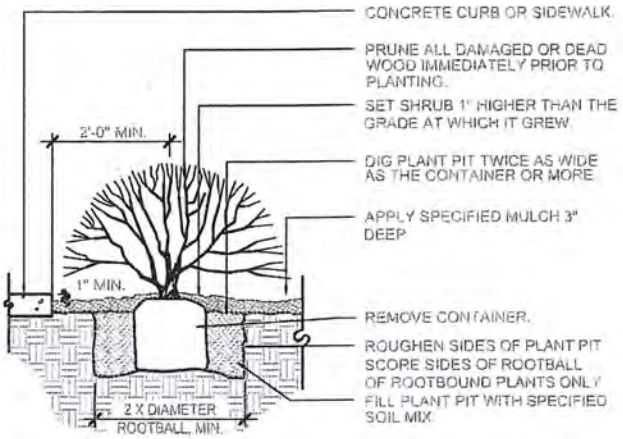

NOTE: ANY BROKEN OR CRUMBLING ROOTBALL WILL BE REJECTED. REMOVING THE CONTAINERS WILL NOT BE AN EXCUSE FOR DAMAGED ROOTBALLS.
NOTE: HOLD GRADE 1" BELOW EDGE OF WALK OR CURB
NOTE: TREES OVER 60" HEIGHT SHALL BE STAKED FROM TWO SIDES

(B) TREE AND SHRUB PLANTING
NTS

**PLANT SPACING	A	B	C	D
6"	6"	6"	5"	6"
8"	8"	8"	7"	8"
12"	12"	8"	10"	12"
18"	18"	9"	15"	18"
24"	24"	12"	21"	24"
30"	30"	15"	26"	30"
36"	36"	30"	31"	36"
48"	48"	30"	42"	48"
60"	60"	36"	52"	60"

**OR AS SHOWN ON PLAN

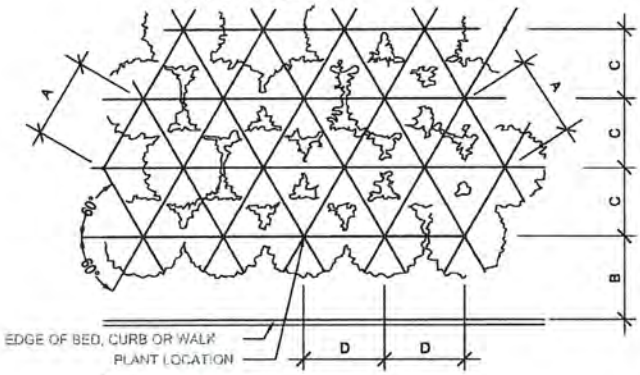

NOTE:
ALIGN FRONT ROW PARALLEL TO BED LINE

(C) GROUNDCOVER LAYOUT AND SPACING
NTS

PROPOSED: Shared Pier & Boat Lifts
IN: Lake Washington
AT: Kirkland
COUNTY: King **STATE**: WA

SHEET 16 of 16

DATE: February 19, 2013
REV: September 11, 2014
REV: October 21, 2014