US Army Corps of Engineers
Seattle District

WASHINGTON STATE DEPARTMENT OF ECOLOGY

Joint Public Notice

Application for a Department of the Army Permit and a Washington Department of Ecology Water Quality Certification and/or Coastal Zone Management Consistency Concurrence

US Army Corps of Engineers
Regulatory Branch
Post Office Box 3755
Seattle, WA 98124-3755
Telephone: (206) 764-5527
ATTN: Susan Powell,
Project Manager

WA Department of Ecology
SEA Program
Post Office Box 47600
Olympia, WA 98504-7600
Telephone: (360) 407-6068
ATTN: SEA Program,
Federal Permit Coordinator

Public Notice Date: May 19, 2015
Expiration Date: June 18, 2015

Reference No.: NWS-2014-476
Name: Orca Dreams, LLC.

Interested parties are hereby notified that the U.S. Army Corps of Engineers (Corps) and the Washington Department of Ecology (Ecology) have received an application to perform work in waters of the U.S. as described below and shown on the enclosed drawings dated September 24, 2014.

The Corps will review the work in accordance with Section 10 of the Rivers and Harbors Act. Ecology will review the work pursuant to the Coastal Zone Management Act.

APPLICANT: Orca Dreams, LLC.
Attention: Mr. David Honeywell
P.O. Box 928
Friday Harbor, Washington 98250
Telephone: (509) 993-8413

AGENT: Law Office of Stephanie Johnson O'Day
Attention: Ms. Francine Shaw
P.O. Box 2112
Friday Harbor, Washington 98250
Telephone: (360) 378-6278

LOCATION: In False Bay at 1601A False Bay Drive, San Juan Island, San Juan County, Washington.

WORK: Construct a 120' by 6' pier; and install a 4'8" by 60' ramp and an 8' by 60' moorage float. The structure will include ten 10" diameter steel piles and two float anchors. The piling will be installed by vibratory method or rock drilling.

PURPOSE: The structure will provide moorage for three waterfront parcels.

MITIGATION: The applicant proposes to remove two existing creosote-treated piles.

ENDANGERED SPECIES: The Endangered Species Act (ESA) requires Federal agencies to consult with the National Marine Fisheries Service (NMFS) and/or U.S. Fish and Wildlife Service pursuant to Section 7 of the ESA

on all actions that may affect a species listed (or proposed for listing) under the ESA as threatened or endangered or any designated critical habitat.

After receipt of comments from this public notice, the Corps will evaluate the potential impacts to proposed and/or listed species and their designated critical habitat.

ESSENTIAL FISH HABITAT: The Magnuson-Stevens Fishery Conservation and Management Act, as amended by the Sustainable Fisheries Act of 1996, requires all Federal agencies to consult with the NMFS on all actions, or proposed actions, permitted, funded, or undertaken by the agency, that may adversely affect Essential Fish Habitat (EFH). The proposed action would impact EFH in the project area.

The Corps has determined that the proposed action will not adversely affect designated EFH for federally managed fisheries in Washington waters. No further EFH consultation is necessary.

CULTURAL RESOURCES: The Corps has reviewed the latest published version of the National Register of Historic Places, Washington Information System for Architectural and Archaeological Records Data and other sources of information. There are no recorded historic properties within the permit area. The proposed work is of such a limited nature and extent that little likelihood exists for the project to impinge upon an unrecorded historic property.

The Corps invites responses to this public notice from Native American Tribes or Tribal governments; Federal, State, and local agencies; historical and archeological societies; and other parties likely to have knowledge of or concerns regarding historic properties and sites of religious and cultural significance at or near the project area. After receipt of comments from this public notice, the Corps will evaluate potential impacts and consult with the State Historic Preservation Officer and Native American Tribes in accordance with Section 106 of the National Historic Preservation Act, as appropriate.

PUBLIC HEARING: Any person may request, in writing, within the comment period specified in this notice, that a public hearing be held to consider this application. Requests for public hearings shall state, with particularity, the reasons for holding a public hearing.

EVALUATION – CORPS: The decision whether to issue a permit will be based on an evaluation of the probable impacts, including cumulative impacts, of the proposed activity on the public interest. That decision will reflect the national concern for both protection and utilization of important resources. The benefits, which reasonably may be expected to accrue from the proposal, must be balanced against its reasonably foreseeable detriments. All factors which may be relevant to the proposal will be considered, including the cumulative effects thereof; among those are conservation, economics, aesthetics, general environmental concerns, wetlands, historic properties, fish and wildlife values, flood hazards, floodplain values, land use, navigation, shoreline erosion and accretion, recreation, water supply and conservation, water quality, energy needs, safety, food and fiber production, mineral needs, considerations of property ownership, and, in general, the needs and welfare of the people.

The Corps is soliciting comments from the public; Native American Nations or Tribal governments; Federal, State, and local agencies and officials; and other interested parties in order to consider and evaluate the impacts of this activity. Any comments received will be considered by the Corps to determine whether to issue, modify, condition or deny a permit for the work. To make this decision, comments are used to assess impacts on endangered species, historic properties, water quality, general environmental effects, and the other public interest factors listed above. Comments are used in the preparation of an Environmental Assessment and/or an Environmental Impact Statement pursuant to the National Environmental Policy Act. Comments are also used to determine the need for a public hearing and to determine the overall public interest of the activity.

NWS-2014-476, Orca Dreams, LLC

EVALUATION – ECOLOGY: Ecology is soliciting comments from the public; Federal, Native American Nations or Tribal governments, State, and local agencies and officials; and other interested parties in order to consider and evaluate the impacts of this activity. Ecology will be considering all comments to determine whether to certify or deny certification for the proposed project.

ADDITIONAL EVALUATION:

This proposal is the subject of Shorelines Substantial Development Permit No. PSJ000-14-0007, being processed by San Juan County.

COMMENT AND REVIEW PERIOD: Conventional mail or e-mail comments on this public notice will be accepted and made part of the record and will be considered in determining whether authorizing the work would not be contrary to the public interest. In order to be accepted, e-mail comments must originate from the author's e-mail account and must include on the subject line of the e-mail message the permit applicant's name and reference number as shown below. Either conventional mail or e-mail comments must include the permit applicant's name and reference number, as shown below, and the commenter's name, address, and phone number. All comments whether conventional mail or e-mail must reach this office, no later than the expiration date of this public notice to ensure consideration.

CORPS COMMENTS: All e-mail comments should be sent to susan.m.powell@usace.army.mil. Conventional mail comments should be sent to: U.S. Army Corps of Engineers, Regulatory Branch, Attention: Ms. Susan Powell, P.O. Box 3755, Seattle, Washington 98124-3755. All comments received will become part of the administrative record and are subject to public release under the Freedom of Information Act including any personally identifiable information such as names, phone numbers, and addresses.

ECOLOGY COMMENTS: Any person desiring to present views on the project pertaining to a Coastal Zone Management consistency concurrence, may do so by submitting written comments to the following address: Washington State Department of Ecology, Attention: Federal Permit Coordinator, P.O. Box 47600, Olympia, Washington 98504-7600, or e-mail to ecyrefedpermits@ecy.wa.gov.

To ensure proper consideration of all comments, responders must include the following name and reference number in the text of their comments: Orca Dreams, LLC., NWS-2014-476

Encl: Figures (8)

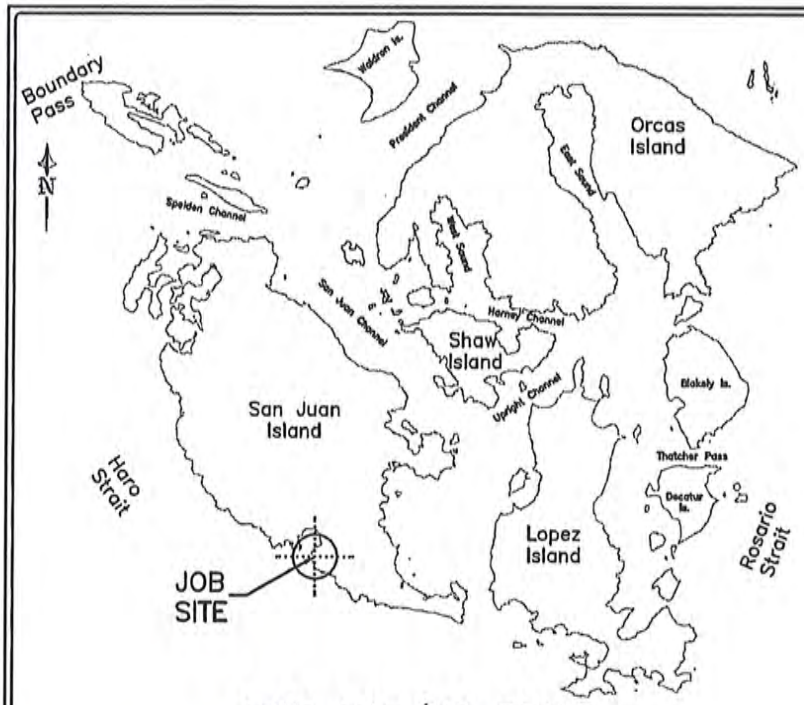

AREA MAP/NO SCALE

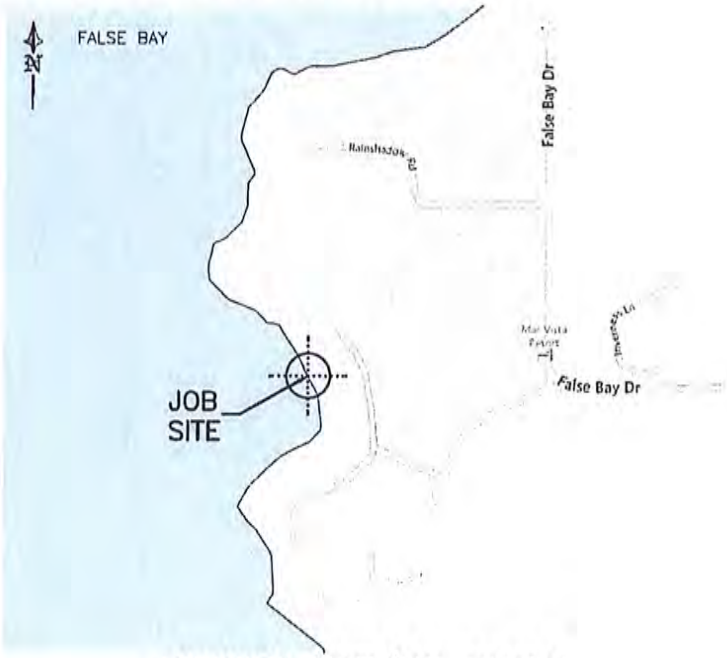

VICINITY MAP/NO SCALE

LEGAL DESCRIPTIONS

TAXLOT #: 353344005000

PR S345.16' OF GL 9 EX CO RD (LESS ANY MOBILE OR MANUFACTURED HOMES) SEC 33, T 35N, R 3W

LAT: 48.4786688
LONG: −123.0660695

TAXLOT #: 353344008000

PR GL 9 SEC 33 T34N R3W PR GL 1 SEC 4 T34N R3W (LESS ANY MOBILE OR MANUFACTURED HOMES) SEC 33, T35N, R3W SEC 4, T34N, R3W

LAT: 48.4774882
LONG: −123.0657477

TAXLOT #: 340411002000

PR GL 1 SEC 04, T 34N, R 3W

LAT: 48.4754825
LONG: −123.0665416

MOVED PIER NORTH TO SUIT NEW SURVEY & MADE SMALLER DOCK/PIER FOOTPRINT **REVISED 09-24-2014**

PROJECT DESIGNED BY:
Waterfront Construction Inc.

THIS DOCUMENT IS **PROPRIETARY** PROPERTY OF WATERFRONT CONSTRUCTION INC., AND IS NOT TO BE USED, IN WHOLE OR IN PART, FOR ANY OTHER PROJECT WITHOUT THE WRITTEN AUTHORIZATION OF WATERFRONT CONSTRUCTION INC.

PURPOSE: PROVIDE BOAT MOORAGE	PROJECT NAME: ORCAS DREAMS, LLC	PROPOSED: CONSTRUCT NEW PIER, RAMP AND FLOAT
ADJACENT OWNERS: ① FRIDAY HARBOR ASSOCIATES LP c/o MICHAEL V PRENTISS PRES P.O. BOX 7046 DALLAS, TX. 75209 ② CATHERINE LINN GOULD 2015 14TH AVE E SEATTLE, WA. 98112	DATUM: MLLW = 0.00' REFERENCE #: 2014 - 476 SITE LOCATION ADDRESS: 1601 A FALSE BAY DR FRIDAY HARBOR, WA. 98250 DWG#: 14-31020-A.1-4	IN: FALSE BAY NEAR/AT: SAN JUAN ISLAND COUNTY: SAN JUAN — STATE: WA APPL BY: ORCAS DREAMS, LLC c/o DAVID HONEYWELL SHEET: 1 OF: 8 — DATE: 3-31-14

PROJECT DESIGNED BY:
Waterfront Construction Inc.

THIS DOCUMENT IS **PROPRIETARY** PROPERTY OF WATERFRONT CONSTRUCTION INC., AND IS NOT TO BE USED, IN WHOLE OR IN PART, FOR ANY OTHER PROJECT WITHOUT THE WRITTEN AUTHORIZATION OF WATERFRONT CONSTRUCTION INC.

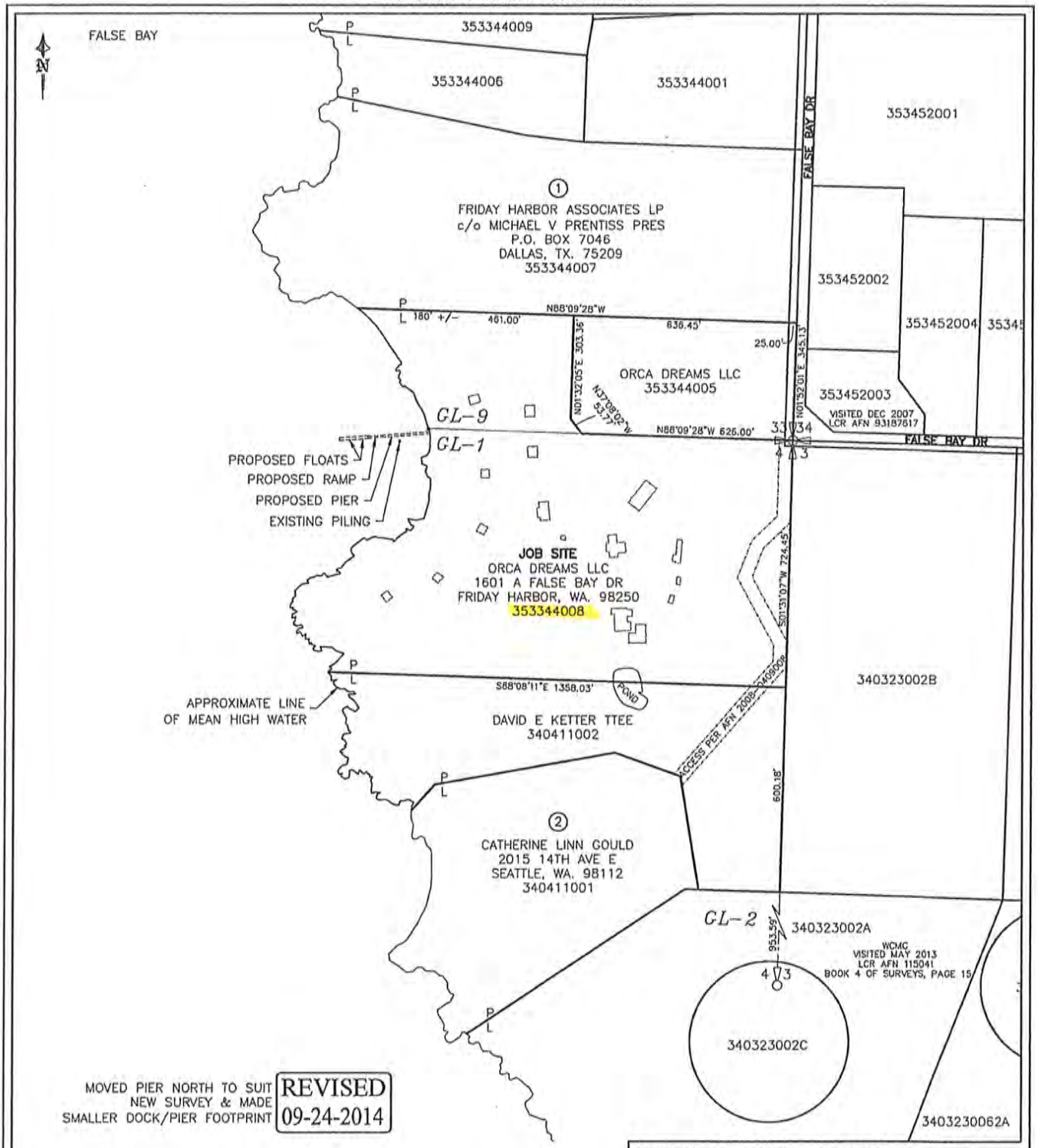

MOVED PIER NORTH TO SUIT NEW SURVEY & MADE SMALLER DOCK/PIER FOOTPRINT

REVISED 09-24-2014

SITE PLAN

400' 200' 0' 400'

SCALE: 1"=400'

REFERENCE #: NWS 2014-476	
APPLICANT: ORCAS DREAMS, LLC c/o DAVID HONEYWELL	
PROPOSED: CONSTRUCT NEW PIER, RAMP AND FLOAT	
NEAR/AT: SAN JUAN ISLAND	
SHEET: 2 OF: 8	
DATE: 3-31-14	DWG#: 14-31020-A.2-4

PROJECT DESIGNED BY:
Waterfront Construction Inc.

THIS DOCUMENT IS **PROPRIETARY** PROPERTY OF WATERFRONT CONSTRUCTION INC., AND IS NOT TO BE USED, IN WHOLE OR IN PART, FOR ANY OTHER PROJECT WITHOUT THE WRITTEN AUTHORIZATION OF WATERFRONT CONSTRUCTION INC.

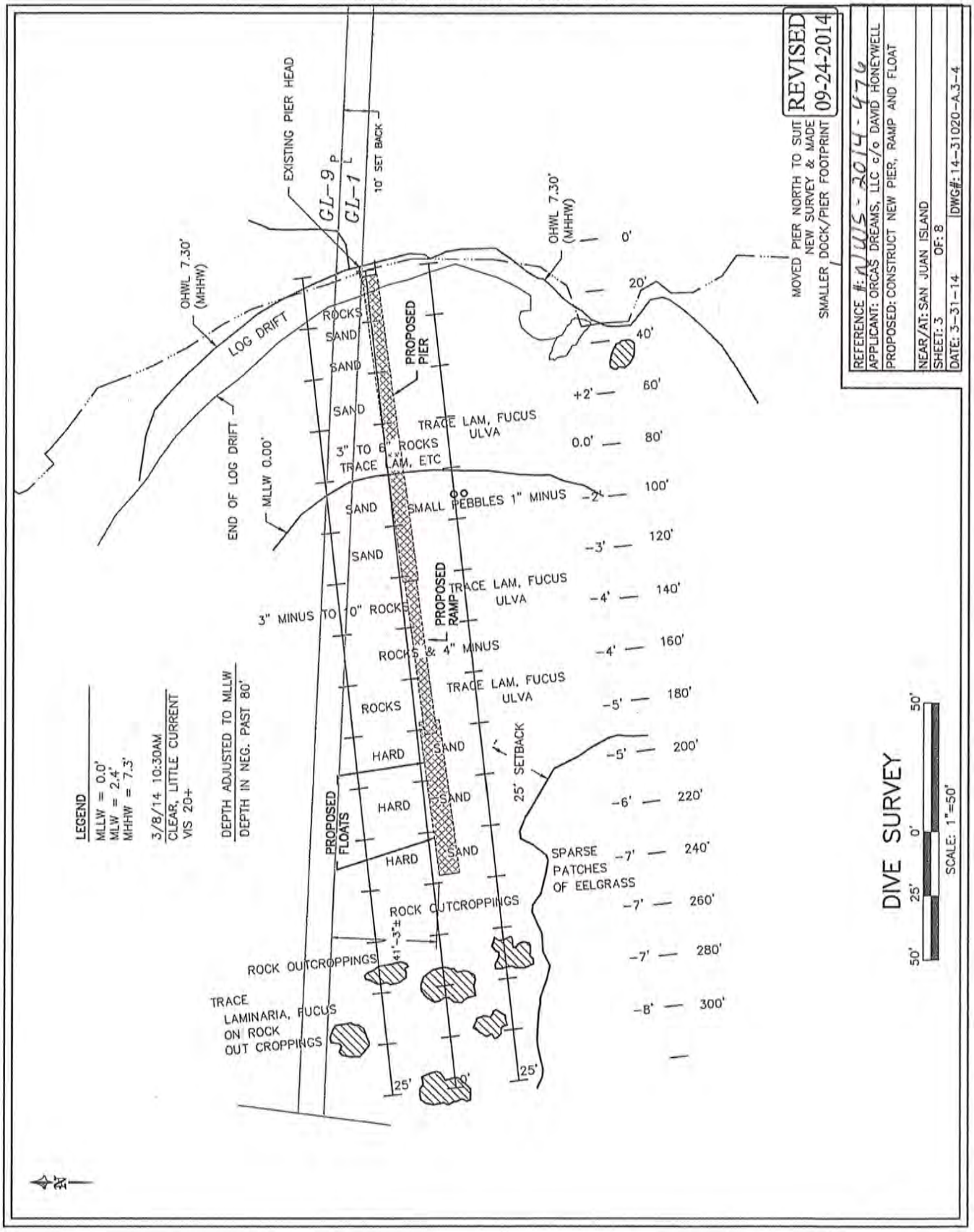

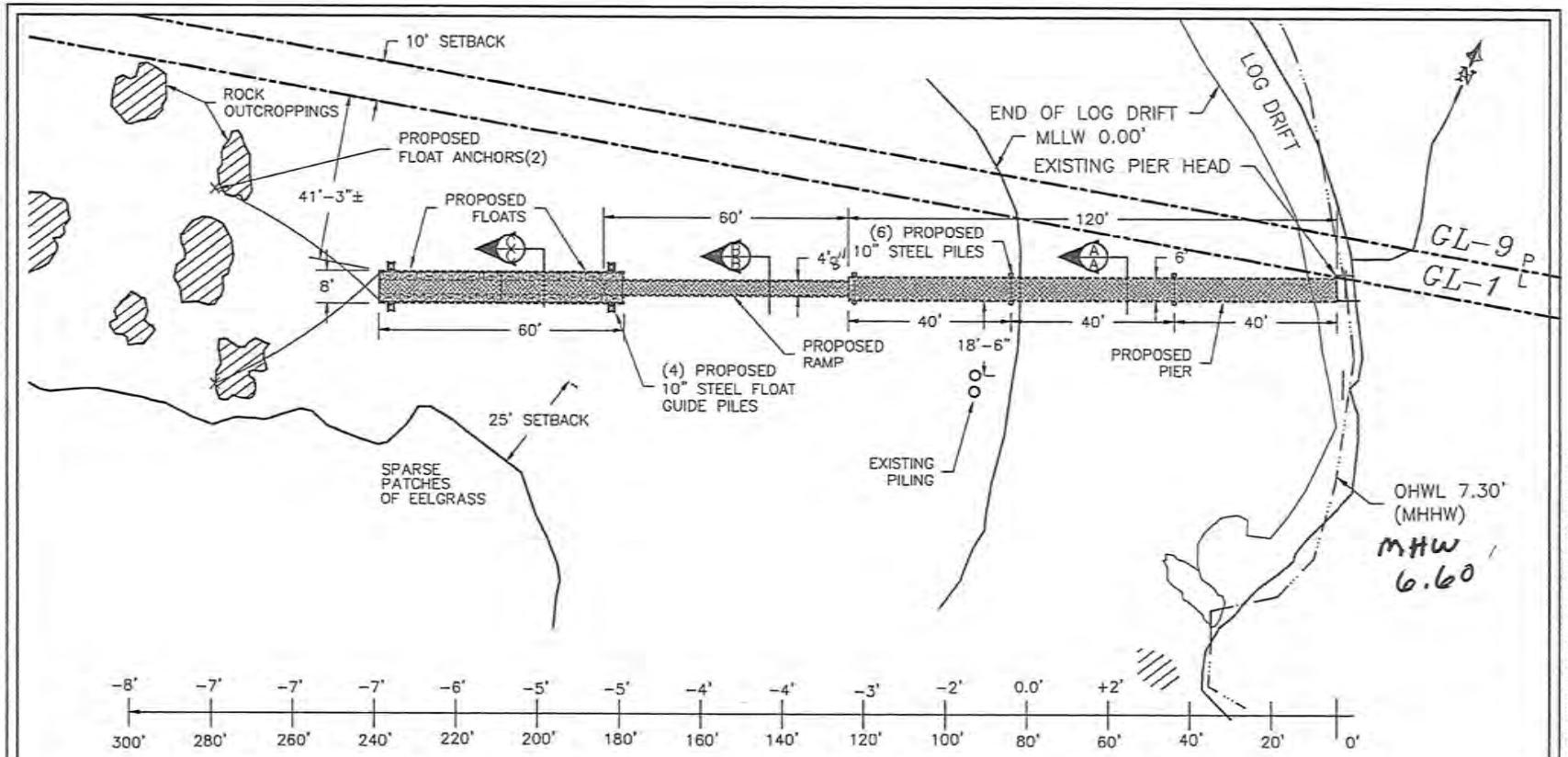

DETAIL PLAN VIEW

SCALE: 1"=40'

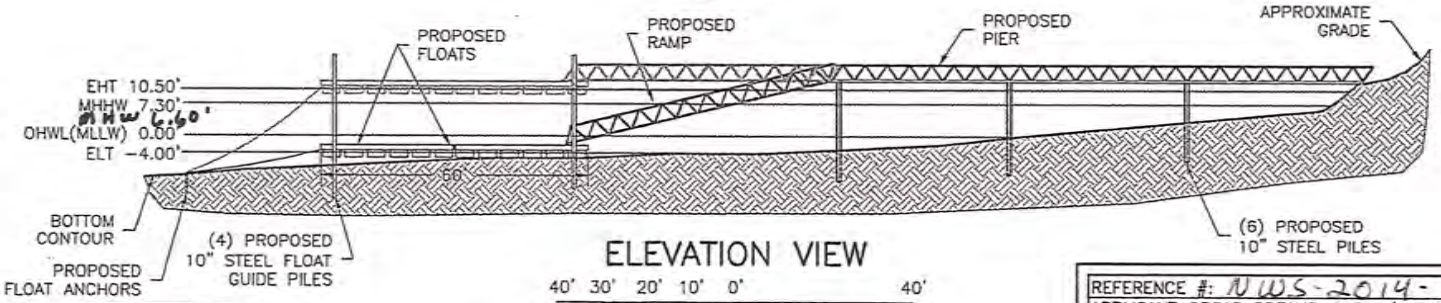

ELEVATION VIEW

40' 30' 20' 10' 0' 40'

SCALE: 1"=40'

PROPOSED PIER	720 S/F
PROPOSED RAMP	240 S/F
PROPOSED FLOATS	480 S/F
LESS RAMP OVERLAP	-19.7 S/F
TOTAL FOOTPRINT	**1420.3 S/F**

MOVED PIER NORTH TO SUIT NEW SURVEY & MADE SMALLER DOCK/PIER FOOTPRINT

REVISED 09-24-2014

REFERENCE #: NWS-2014-476	
APPLICANT: ORCAS DREAMS, LLC c/o DAVID HONEYWELL	
PROPOSED: CONSTRUCT NEW PIER, RAMP AND FLOAT	
NEAR/AT: SAN JUAN ISLAND	
SHEET: 4 OF: 8	
DATE: 3-31-14	DWG#: 14-31020-A.4-4

PROJECT DESIGNED BY: Waterfront Construction Inc.

THIS DOCUMENT IS PROPRIETARY PROPERTY OF WATERFRONT CONSTRUCTION INC., AND IS NOT TO BE USED, IN WHOLE OR IN PART, FOR ANY OTHER PROJECT WITHOUT THE WRITTEN AUTHORIZATION OF WATERFRONT CONSTRUCTION INC.

PROJECT DESIGNED BY:
Waterfront Construction Inc.

THIS DOCUMENT IS **PROPRIETARY** PROPERTY OF WATERFRONT CONSTRUCTION INC., AND IS NOT TO BE USED, IN WHOLE OR IN PART, FOR ANY OTHER PROJECT WITHOUT THE WRITTEN AUTHORIZATION OF WATERFRONT CONSTRUCTION INC.

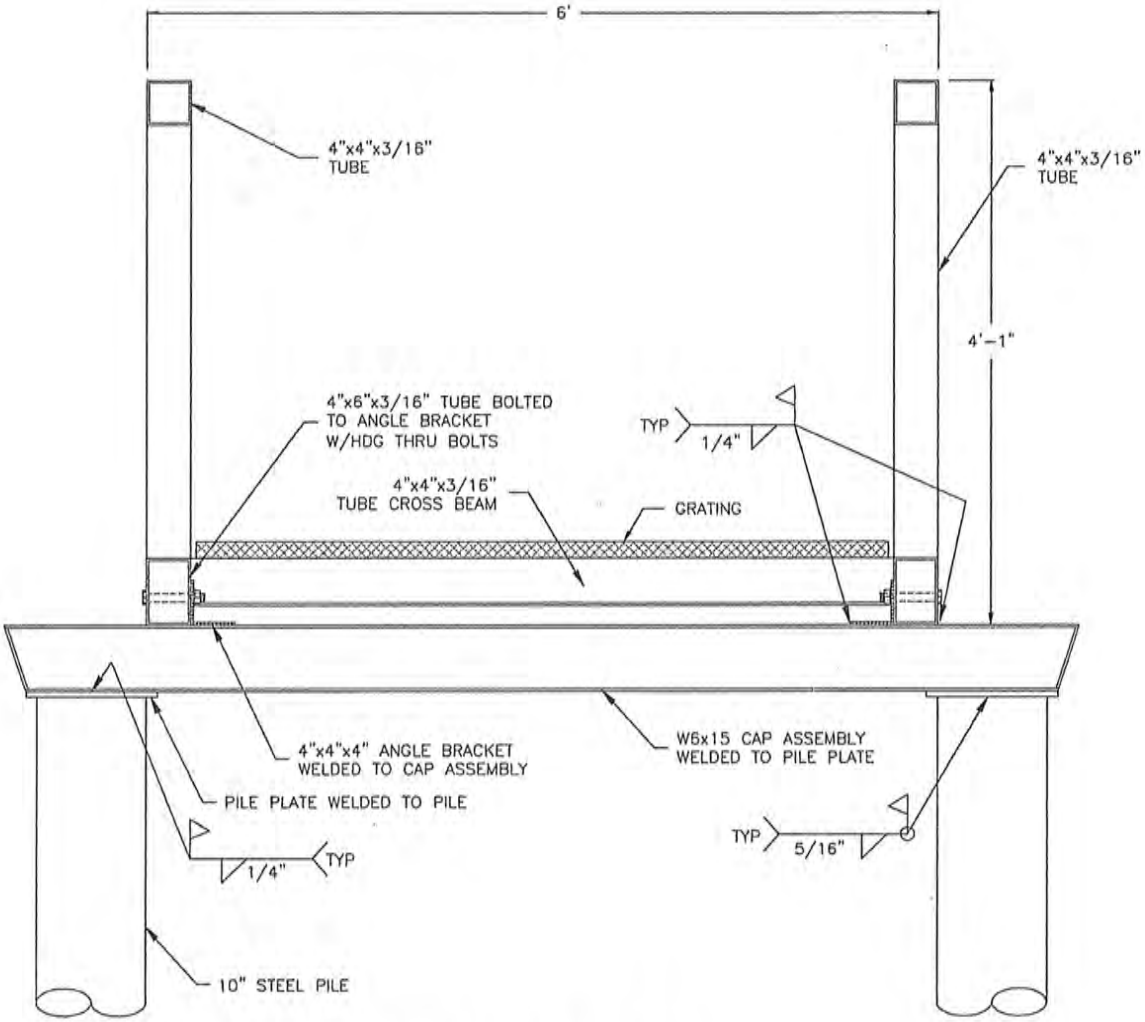

PIER SECTION VIEW A–A

12" 6" 3" 0' 1'

SCALE: 3/4"=1'

MOVED PIER NORTH TO SUIT NEW SURVEY & MADE SMALLER DOCK/PIER FOOTPRINT

REVISED 09-24-2014

REFERENCE #: NWS-2014-476	
APPLICANT: ORCAS DREAMS, LLC c/o DAVID HONEYWELL	
PROPOSED: CONSTRUCT NEW PIER, RAMP AND FLOAT	
NEAR/AT: SAN JUAN ISLAND	
SHEET: 5 OF: 8	
DATE: 3-31-14	DWG#: 14-31020-A.5-4

PROJECT DESIGNED BY:
Waterfront Construction Inc.
THIS DOCUMENT IS **PROPRIETARY** PROPERTY OF WATERFRONT CONSTRUCTION INC., AND IS NOT TO BE USED, IN WHOLE OR IN PART, FOR ANY OTHER PROJECT WITHOUT THE WRITTEN AUTHORIZATION OF WATERFRONT CONSTRUCTION INC.

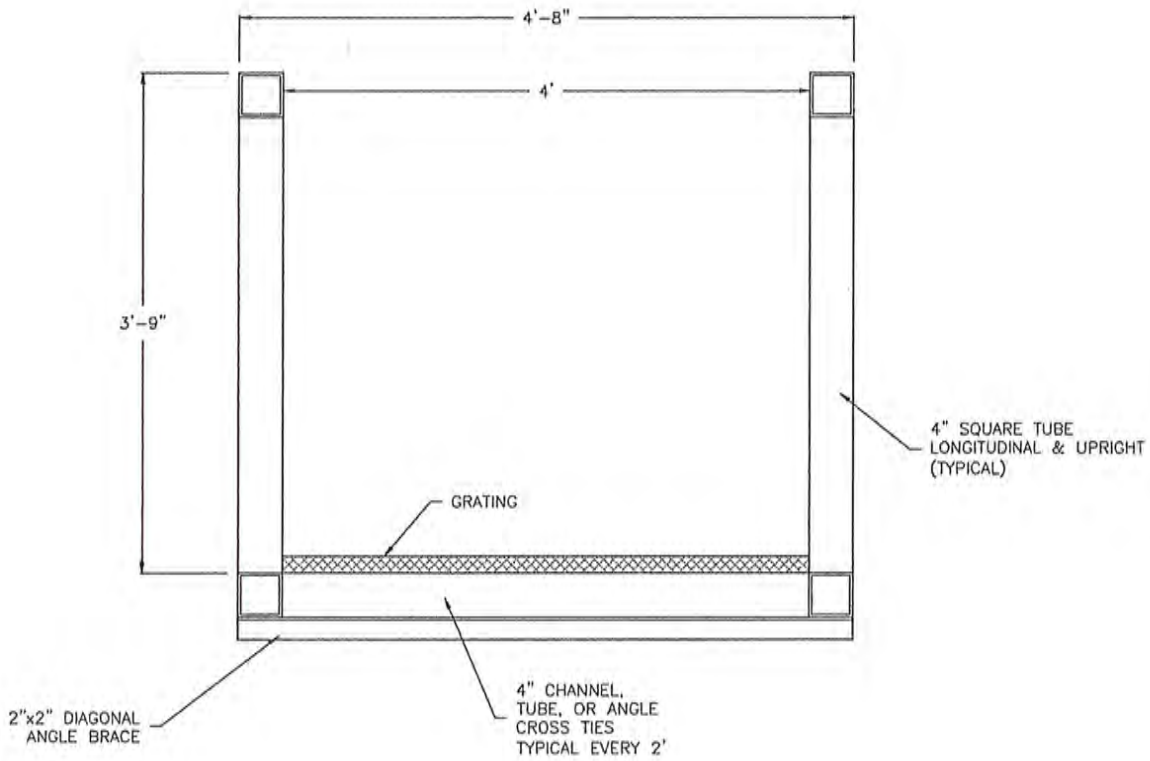

RAMP SECTION VIEW B–B

12" 6" 3" 0' 1'

SCALE: 3/4"=1'

MOVED PIER NORTH TO SUIT NEW SURVEY & MADE SMALLER DOCK/PIER FOOTPRINT

REVISED 09-24-2014

REFERENCE #: NWS-2014-476	
APPLICANT: ORCAS DREAMS, LLC c/o DAVID HONEYWELL	
PROPOSED: CONSTRUCT NEW PIER, RAMP AND FLOAT	
NEAR/AT: SAN JUAN ISLAND	
SHEET: 6 OF: 8	
DATE: 3-31-14	DWG#: 14-31020-A.6-4

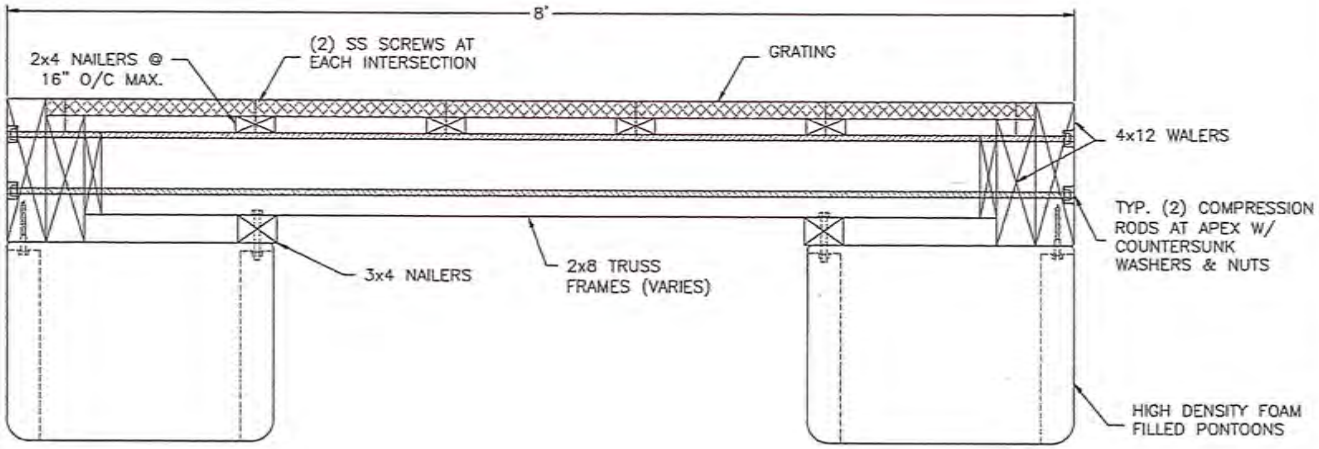

FLOAT SECTION C–C

12" 6" 3" 0' 1'

SCALE: 3/4"=1'

PATENT NO.
US 7,708,497 B2
MAY 4, 2010

MATERIAL SPECIFICATIONS

PART	SPECIFICATIONS	TREATMENT
FLOAT GUIDE PILING	10" STD WALL STEEL PIPE	EPOXY COATED
FLOAT NAILERS	2x4 & 3x4 DF #2 OR BTR	ACZA
FLOAT RIM JOIST	2x8 DF #2 OR BTR	ACZA
FLOAT JOIST	2x8 DF #2 OR BTR	ACZA
FLOAT STRINGERS	4x12 DF # 2 OR BTR	ACZA
FLOAT GRATING	MOLDED PLASTIC	NONE
ALL HARDWARE	STEEL	HDG

REFERENCE #: NWS-2014-476	
APPLICANT: ORCAS DREAMS, LLC c/o DAVID HONEYWELL	
PROPOSED: CONSTRUCT NEW PIER, RAMP AND FLOAT	
NEAR/AT: SAN JUAN ISLAND	
SHEET: 7 OF: 8	
DATE: 3–31–14	DWG#: 14–31020–A.7–4

PROJECT DESIGNED BY:
Waterfront Construction Inc.

THIS DOCUMENT IS PROPRIETARY PROPERTY OF WATERFRONT CONSTRUCTION INC., AND IS NOT TO BE USED, IN WHOLE OR IN PART, FOR ANY OTHER PROJECT WITHOUT THE WRITTEN AUTHORIZATION OF WATERFRONT CONSTRUCTION INC.

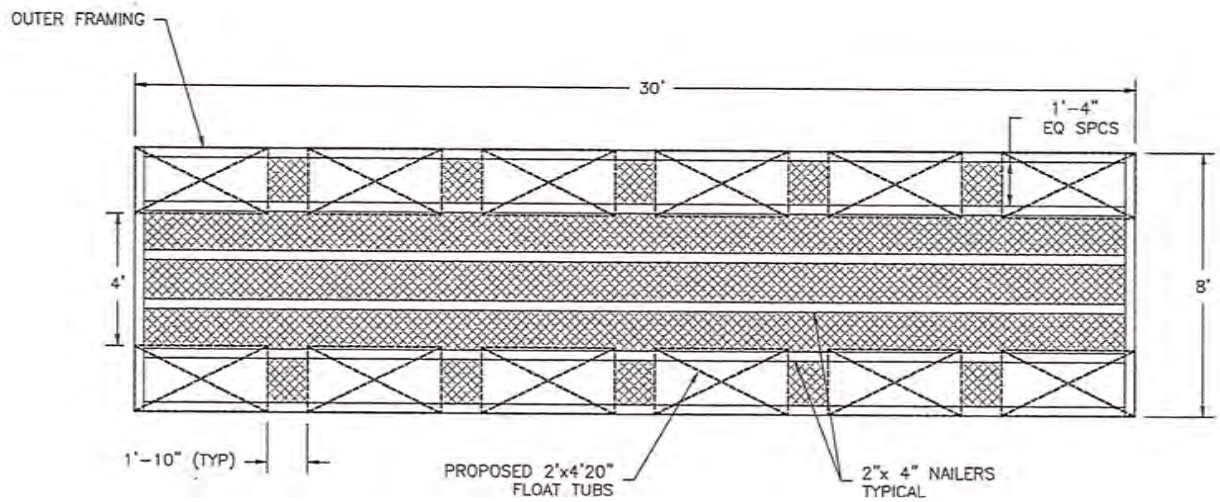

FLOAT TUB LAYOUT (TYP)

4' 3' 2' 1' 0' 4'

SCALE: 3/16"=1'

= OPEN GRATING AREA

(1) 8'x30' FLOAT TOTAL GRATING= 218.2 S/F.
(2) LESS FLOATS AND FRAMING= 117/218= .536
(3) 8'x30' FLOAT FUNCTIONAL GRATING AT 54%

MOVED PIER NORTH TO SUIT
NEW SURVEY & MADE
SMALLER DOCK/PIER FOOTPRINT

REVISED
09-24-2014

REFERENCE #: NWS-2014-476	
APPLICANT: ORCAS DREAMS, LLC c/o DAVID HONEYWELL	
PROPOSED: CONSTRUCT NEW PIER, RAMP AND FLOAT	
NEAR/AT: SAN JUAN ISLAND	
SHEET: 8 OF: 8	
DATE: 3-31-14	DWG#: 14-31020-A.8-4

PROJECT DESIGNED BY:
Waterfront Construction Inc.

THIS DOCUMENT, IS PROPRIETARY PROPERTY OF WATERFRONT CONSTRUCTION INC., AND IS NOT TO BE USED, IN WHOLE OR IN PART, FOR ANY OTHER PROJECT WITHOUT THE WRITTEN AUTHORIZATION OF WATERFRONT CONSTRUCTION INC.