US Army Corps of Engineers
Seattle District

Joint Public Notice

Application for a Department of the Army Permit and a Washington Department of Ecology Water Quality Certification and/or Coastal Zone Management Consistency Concurrence

US Army Corps of Engineers
Regulatory Branch
Post Office Box 3755
Seattle, WA 98124-3755
Telephone: (206) 258-1371
ATTN: Debbie Knaub,
Project Manager

WA Department of Ecology
SEA Program
Post Office Box 47600
Olympia, WA 98504-7600
Telephone: (360) 407-6068
ATTN: SEA Program,
Federal Permit Coordinator

Public Notice Date: February 25, 2016
Expiration Date: March 26, 2016

Reference No.: NWS-2016-103
Name: Bureau of Reclamation (Cle Elum Reservoir Juvenile Fish Passage Facility)

Interested parties are hereby notified that the U.S. Army Corps of Engineers (Corps) and the Washington Department of Ecology (Ecology) have received an application to perform work in waters of the U.S. as described below and shown on the enclosed drawings dated January 20, 2016.

The Corps will review the work in accordance with Section 404 of the Clean Water Act (CWA). Ecology will review the work pursuant to Section 401 of the CWA, with applicable provisions of State water pollution control laws and the Coastal Zone Management Act.

APPLICANT: Bureau of Reclamation
Attention: Mr. Walt Larrick
USDI, Bureau of Reclamation, Columbia-Cascades Area Office
1917 March Road
Yakima, Washington 98901
Telephone: (509) 575-5848

LOCATION: In the Cle Elum Reservoir, near Cle Elum, Kittitas County, Washington.

WORK: Construct a permanent juvenile fish passage facility in the Cle Elum Reservoir. The project would be constructed in two stages as described below:

Stage 1: Place 2,700 cubic yards of excavated upland native spoil material and riprap to construct a 23,600 square foot temporary cofferdam and place 90 cubic yards of excavated upland native spoil material to construct a 2,200 square foot permanent work platform for construction of a permanent intake structure (stage 2 work) for juvenile fish passage. Remove temporary Stage 1 cofferdam before Stage 2 begins. All Stage 1 work will occur during reservoir drawdown.

Stage 2: Place 29,500 cubic yards of excavated upland native spoil material and riprap and install 160 sheet piles with a vibratory hammer to construct a temporary 25 foot high, 64,000 square foot temporary cofferdam; excavate 24,500 cubic yards of native material (11,000 square feet) for an intake structure; grade and contour 24,500 cubic yards of the excavated material in a 200,000 square foot area; place 750 cubic yards of aggregate to surface 40,500 square feet of permanent operation and maintenance roads; place 16,000 cubic yards of imported sand and

structural concrete (11,000 square feet) to construct an intake structure. Remove temporary Stage 2 cofferdam at end of project construction. All Stage 2 work will occur during reservoir drawdown.

PURPOSE: To provide juvenile fish passage at Cle Elum Dam.

ADDITIONAL INFORMATION: **Stage 1 and 2 would be completed over a 9 year period.**

MITIGATION: No compensatory mitigation proposed.

ENDANGERED SPECIES: The Endangered Species Act (ESA) requires federal agencies to consult with the National Marine Fisheries Service (NMFS) and/or U.S. Fish and Wildlife Service pursuant to Section 7 of the ESA on all actions that may affect a species listed (or proposed for listing) under the ESA as threatened or endangered or any designated critical habitat. The Bureau of Reclamation, as the lead agency for ESA consultation, has consulted with the NMFS and/or the USFWS as required under Section 7 of the ESA. NMFS and USFWS have concurred with the Bureau of Reclamation's determination of effect for the proposed facilities.

ESSENTIAL FISH HABITAT: The Magnuson-Stevens Fishery Conservation and Management Act, as amended by the Sustainable Fisheries Act of 1996, requires all Federal agencies to consult with the NMFS on all actions, or proposed actions, permitted, funded, or undertaken by the agency, that may adversely affect Essential Fish Habitat (EFH). The proposed action would impact EFH in the project area. The Bureau of Reclamation, as the lead agency for a determination regarding EFH, has consulted with the National Marine Fisheries Services. NMFS has determined that the project will have adverse effects on EFH species. The Bureau of Reclamation accepted all conservation measures recommended by NMFS.

CULTURAL RESOURCES: The Bureau of Reclamation, as the lead agency for determining compliance with Section 106 of the National Historic Preservation Act, will consult with the State Historic Preservation Officer and Native American Tribes as appropriate.

PUBLIC HEARING: Any person may request, in writing, within the comment period specified in this notice, that a public hearing be held to consider this application. Requests for public hearings shall state, with particularity, the reasons for holding a public hearing.

EVALUATION – CORPS: The decision whether to issue a permit will be based on an evaluation of the probable impacts, including cumulative impacts, of the proposed activity on the public interest. That decision will reflect the national concern for both protection and utilization of important resources. The benefits, which reasonably may be expected to accrue from the proposal, must be balanced against its reasonably foreseeable detriments. All factors which may be relevant to the proposal will be considered, including the cumulative effects thereof; among those are conservation, economics, aesthetics, general environmental concerns, wetlands, historic properties, fish and wildlife values, flood hazards, floodplain values, land use, navigation, shoreline erosion and accretion, recreation, water supply and conservation, water quality, energy needs, safety, food and fiber production, mineral needs, considerations of property ownership, and, in general, the needs and welfare of the people.

The Corps is soliciting comments from the public; Native American Nations or tribal governments; Federal, State, and local agencies and officials; and other interested parties in order to consider and evaluate the impacts of this activity. Any comments received will be considered by the Corps to determine whether to issue, modify, condition or deny a permit for the work. To make this decision, comments are used to assess impacts on endangered species, historic properties, water quality, general environmental effects, and the other public interest factors listed above. Comments are used in the preparation of an Environmental Assessment and/or an Environmental Impact Statement pursuant to the National Environmental Policy Act. Comments are also used to determine the need for a public hearing and to determine the overall public interest of the activity.

NWS-2016-130, Bureau of Reclamation (Cle Elum Reservoir Juvenile Fish Passage Facility)

The described discharge will be evaluated for compliance with guidelines promulgated by the Environmental Protection Agency under authority of Section 404(b) (1) of the CWA. These guidelines require an alternatives analysis for any proposed discharge of dredged or fill material into waters of the United States.

SOURCE OF FILL MATERIAL: The source of the fill material will be native spoils and commercial sources.

EVALUATION – ECOLOGY: Ecology is soliciting comments from the public; Federal, Native American Nations or tribal governments, State, and local agencies and officials; and other interested parties in order to consider and evaluate the impacts of this activity. Ecology will be considering all comments to determine whether to certify or deny certification for the proposed project.

ADDITIONAL EVALUATION: The local regulatory authority has issued an exemption from the requirement of obtaining a Shorelines Substantial Development permit for this project.

COMMENT AND REVIEW PERIOD: Conventional mail or e-mail comments on this public notice will be accepted and made part of the record and will be considered in determining whether authorizing the work would not be contrary to the public interest. In order to be accepted, e-mail comments must originate from the author's e-mail account and must include on the subject line of the e-mail message the permit applicant's name and reference number as shown below. Either conventional mail or e-mail comments must include the permit applicant's name and reference number, as shown below, and the commenter's name, address, and phone number. All comments whether conventional mail or e-mail must reach this office, no later than the expiration date of this public notice to ensure consideration.

Copies of this public notice which have been mailed or otherwise physically distributed feature project drawings in black and white. The electronic version features those drawings in color, which we think more accurately communicates the scope of project impacts. To access the electronic version of this public notice, go to the Seattle District's web page at http://www.nws.usace.army.mil/ and under the heading Open Public Comment Periods select Regulatory Public Notices. Recently-issued public notices are listed in chronological order of the date of issuance. Select and view the listing for this project.

CORPS COMMENTS: All e-mail comments should be sent to deborah.j.knaub@usace.army.mil. Conventional mail comments should be sent to: U.S. Army Corps of Engineers, Regulatory Branch, Attention: Deborah Knaub, P.O. Box 3755, Seattle, Washington 98124-3755. All comments received will become part of the administrative record and are subject to public release under the Freedom of Information Act including any personally identifiable information such as names, phone numbers, and addresses.

ECOLOGY COMMENTS: Any person desiring to present views on the project pertaining to a request for water quality certification under Section 401 of the CWA and/or Coastal Zone Management consistency concurrence, may do so by submitting written comments to the following address: Washington State Department of Ecology, Attention: Federal Permit Coordinator, Post Office Box 47600, Olympia, Washington 98504-7600, or e-mail to ecyrefedpermits@ecy.wa.gov.

To ensure proper consideration of all comments, responders must include the following name and reference number in the text of their comments: Bureau of Reclamation (Cle Elum Reservoir Juvenile Fish Passage Facility; NWS-2016-103

Encl: Figures (21)

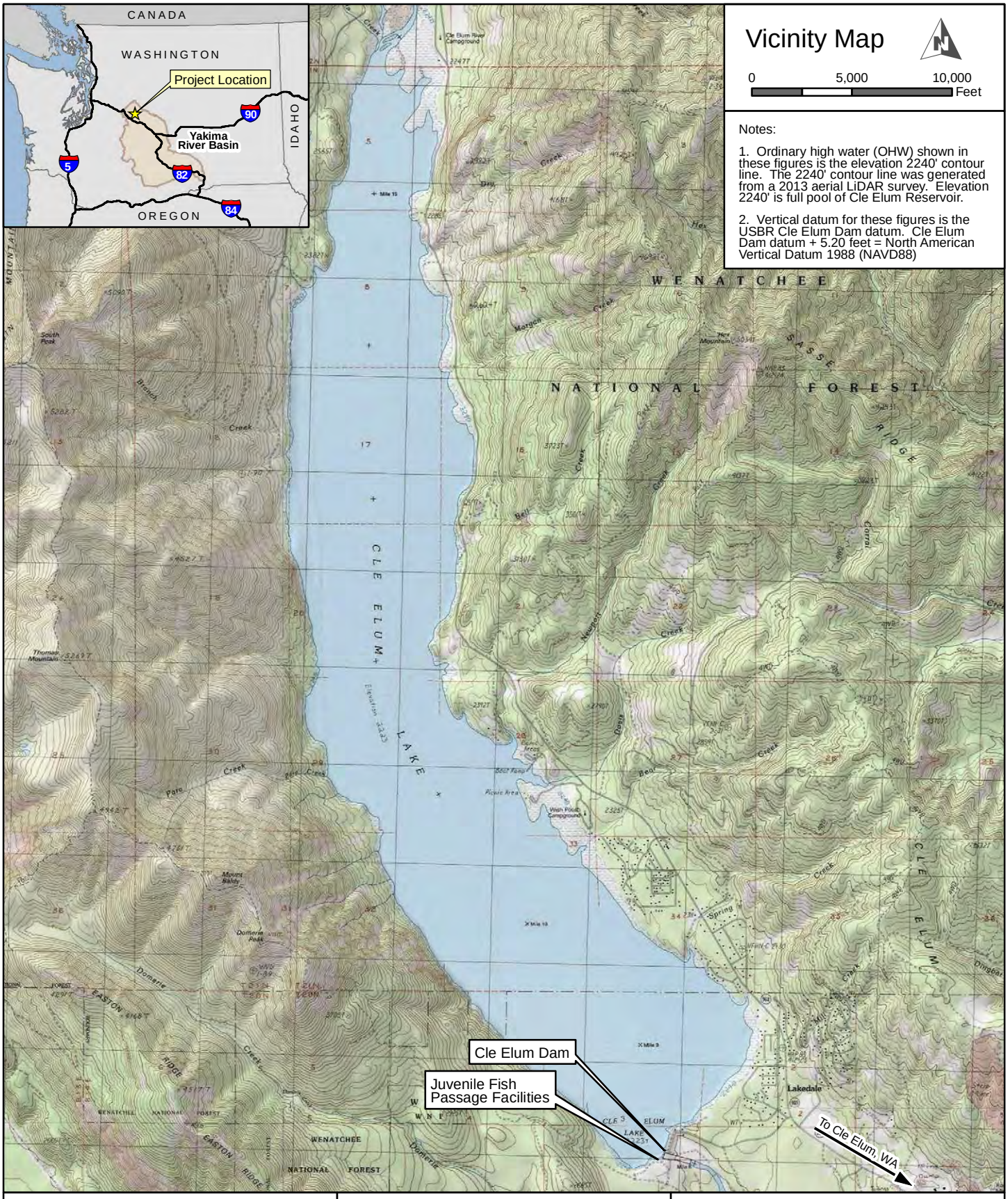

REFERENCE: NWS-2016-103
APPLICANT: USBR

ADJACENT PROPERTY OWNERS:
1. Forest Service
2.

LOCATION: PID 102434
Section 10, T20N, R14E
LAT/LONG: 47.2449N
-121.0753W

PAGE 1 OF 21 DATE: 01-20-16

PROJECT: Cle Elum Dam Juvenile Fish Passage Facilities
IN: Cle Elum Reservoir
NEAR/AT: Cle Elum
COUNTY: Kittitas County
STATE: Washington

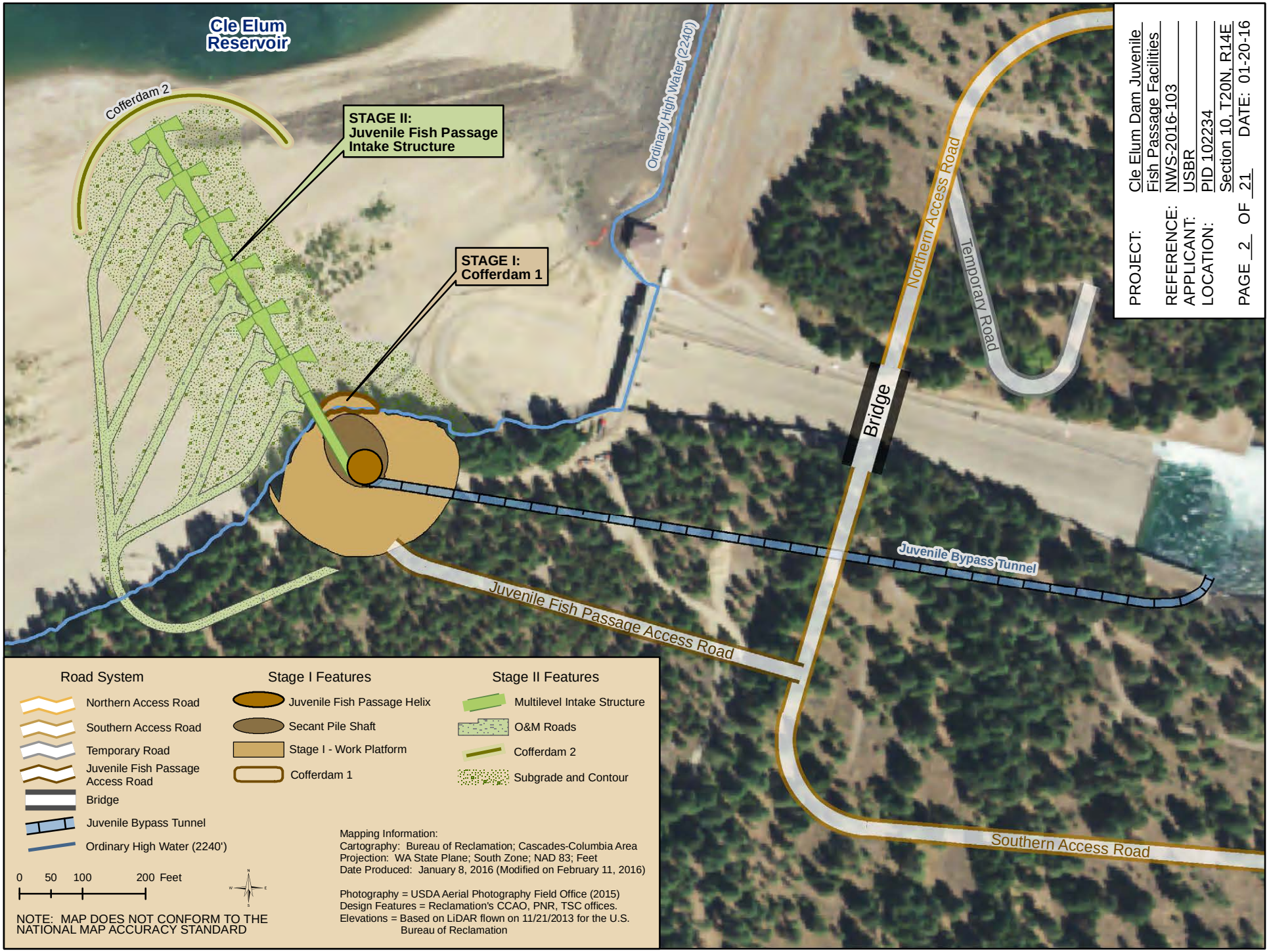
Cle Elum Reservoir
Cofferdam 2
STAGE II: Juvenile Fish Passage Intake Structure
STAGE I: Cofferdam 1
Ordinary High Water (2240')
Northern Access Road
Temporary Road
Bridge
Juvenile Bypass Tunnel
Juvenile Fish Passage Access Road
Southern Access Road
Road System
Northern Access Road
Southern Access Road
Temporary Road
Juvenile Fish Passage Access Road
Bridge
Juvenile Bypass Tunnel
Ordinary High Water (2240')
Stage I Features
Juvenile Fish Passage Helix
Secant Pile Shaft
Stage I - Work Platform
Cofferdam 1
Stage II Features
Multilevel Intake Structure
O&M Roads
Cofferdam 2
Subgrade and Contour
0 50 100 200 Feet
NOTE: MAP DOES NOT CONFORM TO THE NATIONAL MAP ACCURACY STANDARD
Mapping Information:
Cartography: Bureau of Reclamation; Cascades-Columbia Area
Projection: WA State Plane; South Zone; NAD 83; Feet
Date Produced: January 8, 2016 (Modified on February 11, 2016)
Photography = USDA Aerial Photography Field Office (2015)
Design Features = Reclamation's CCAO, PNR, TSC offices.
Elevations = Based on LiDAR flown on 11/21/2013 for the U.S. Bureau of Reclamation
PROJECT: Cle Elum Dam Juvenile Fish Passage Facilities
REFERENCE: NWS-2016-103
APPLICANT: USBR
LOCATION: PID 102234 Section 10, T20N, R14E
PAGE 2 OF 21 DATE: 01-20-16

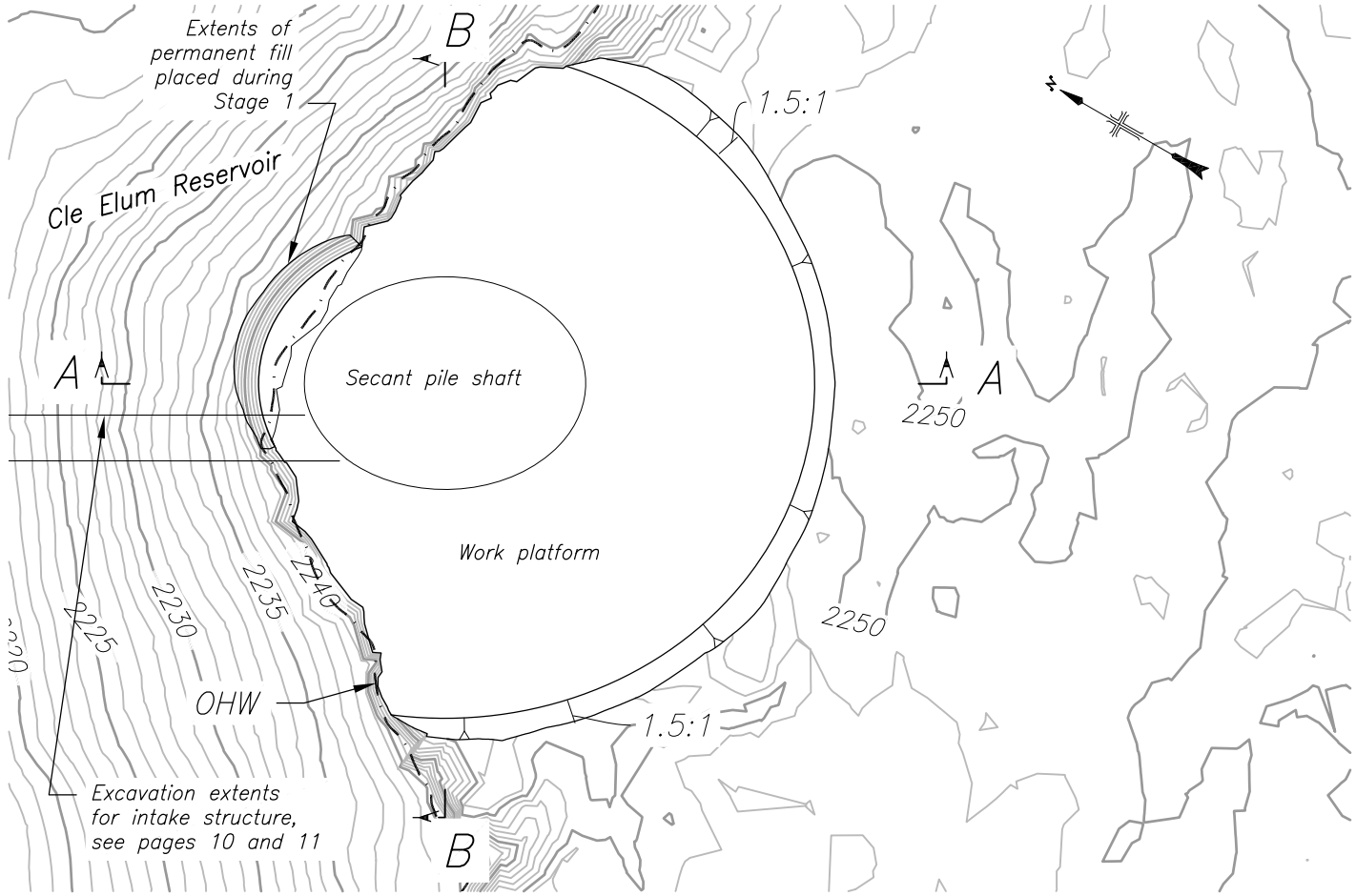

Juvenile Facility Work Platform (Stage I)

Plan

1" = 80'

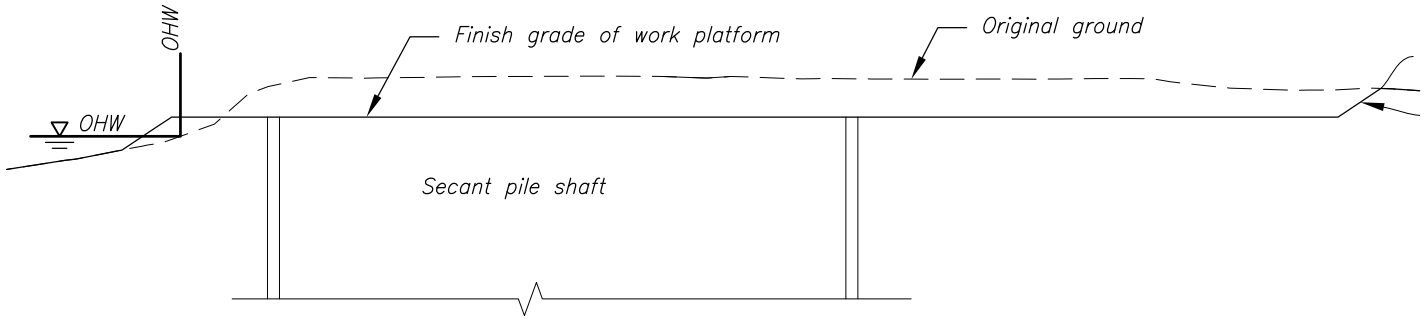

Section A–A

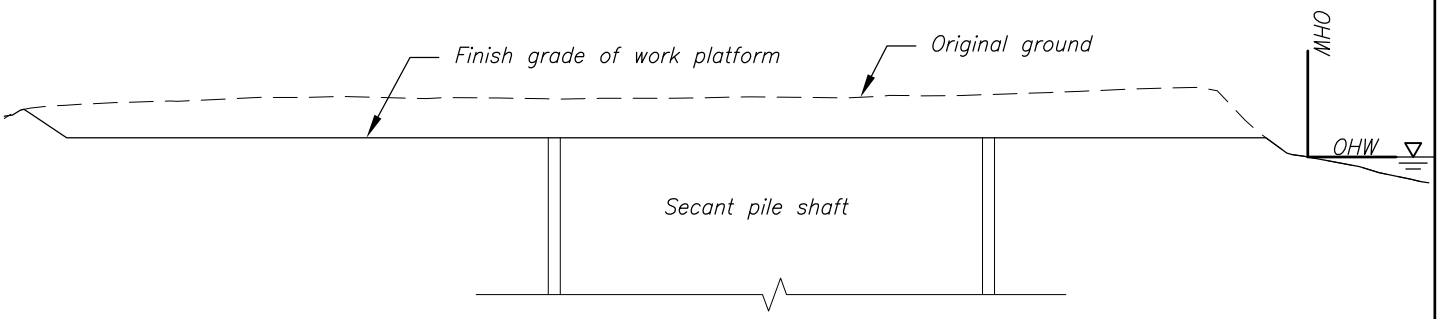

Section B–B

0 20' 40' 80'

Scale for sections

PROJECT:	Cle Elum Dam Juvenile Fish Passage Facilities
REFERENCE:	NWS–2016–103
APPLICANT:	USBR
LOCATION:	47.2449N, –121.0753W Section 10, T20N, R14E

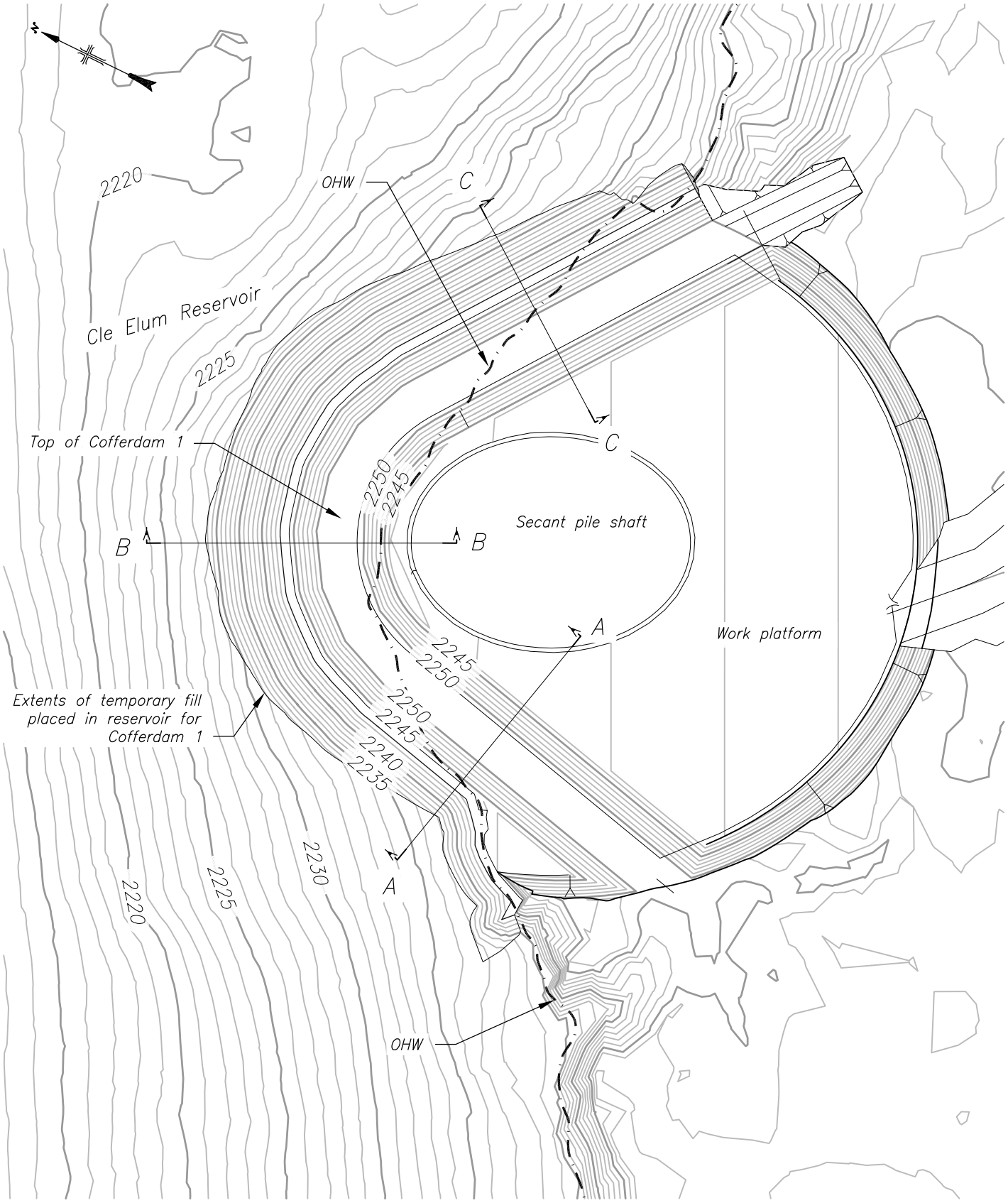

Cofferdam 1 (Stage I)

Plan

0 60' 120'

PROJECT:	Cle Elum Dam Juvenile Fish Passage Facilities
REFERENCE:	NWS-2016-103
APPLICANT:	USBR
LOCATION:	47.2449N, -121.0753W Section 10, T20N, R14E

PAGE 4 OF 21 DATE: 01-21-16

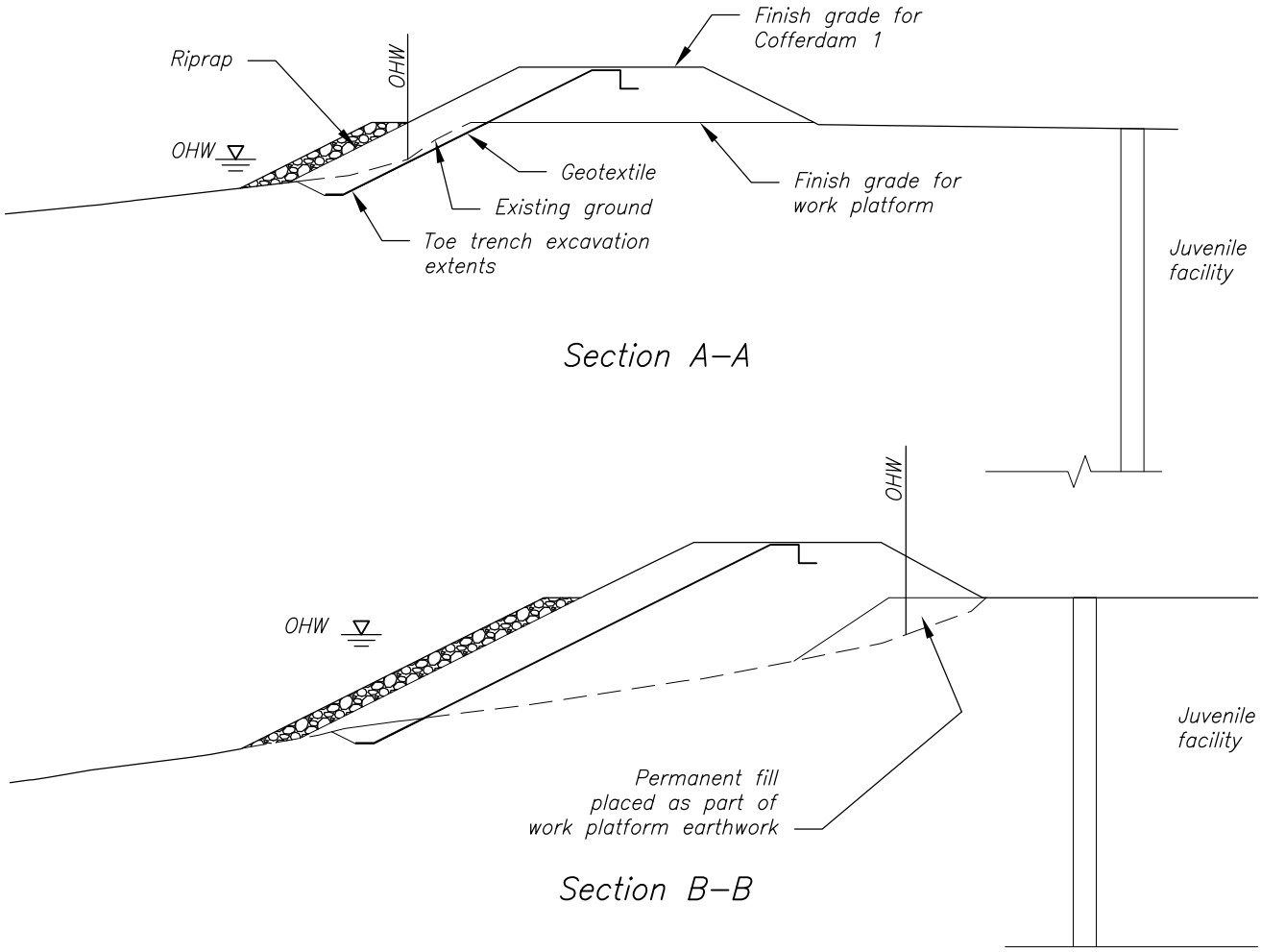

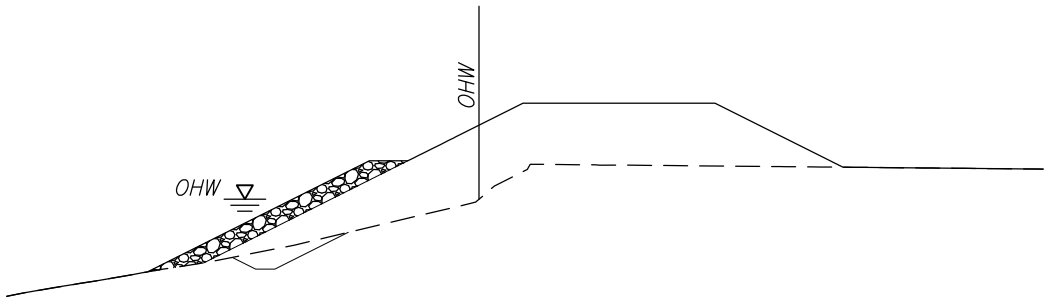

Cofferdam 1 (Stage I)

Sections

0 10' 20' 40'

PROJECT:	Cle Elum Dam Juvenile Fish Passage Facilities
REFERENCE:	NWS–2016–103
APPLICANT:	USBR
LOCATION:	47.2449N, –121.0753W Section 10, T20N, R14E

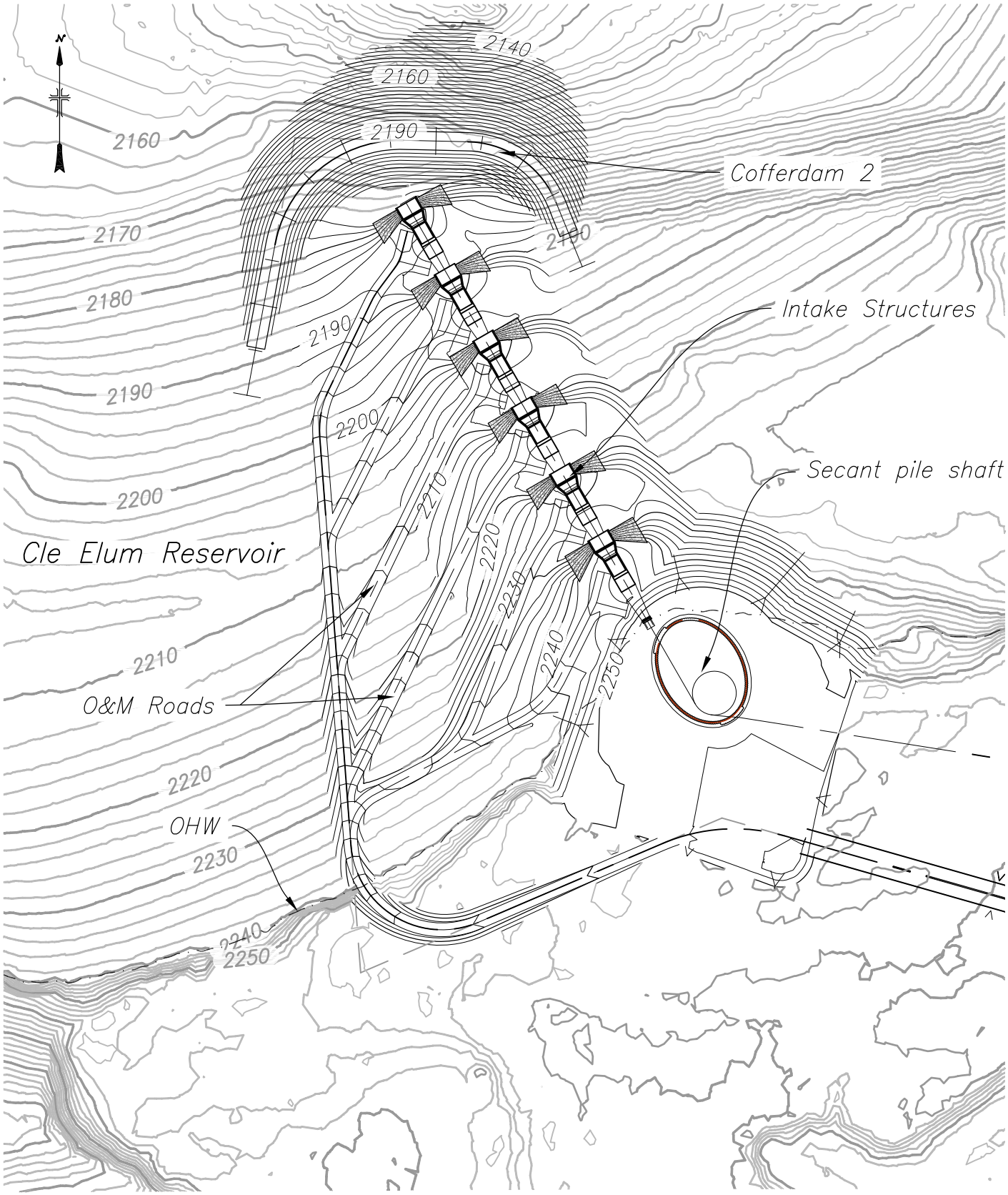

COFFERDAM 2 (Stage II)

PLAN

0 150' 300'

PROJECT:	Cle Elum Dam Juvenile Fish Passage Facilities
REFERENCE:	NWS-2016-103
APPLICANT:	USBR
LOCATION:	47.2449N, -121.0753W Section 10, T20N, R14E

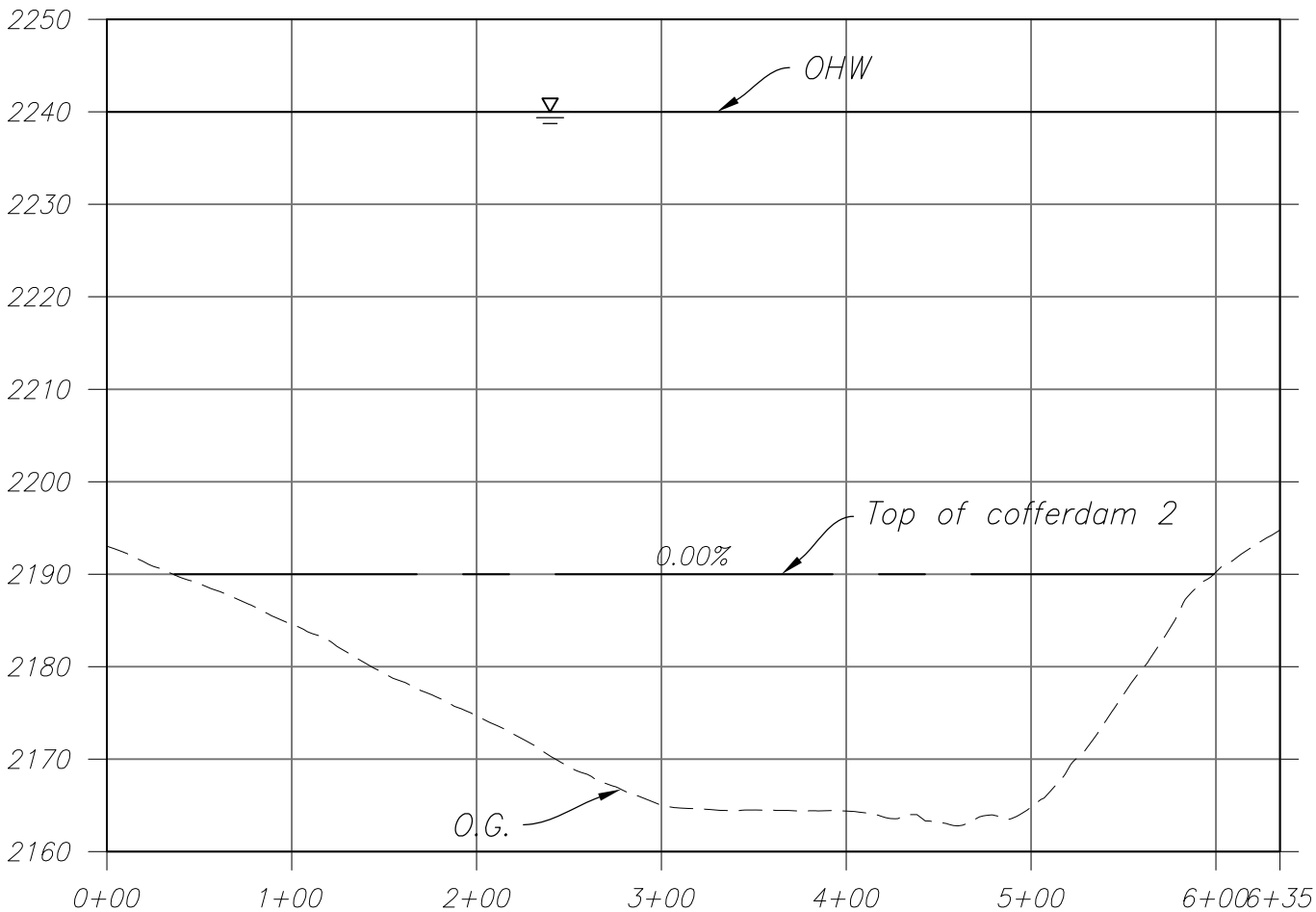

COFFERDAM 2 (Stage II)
PROFILE

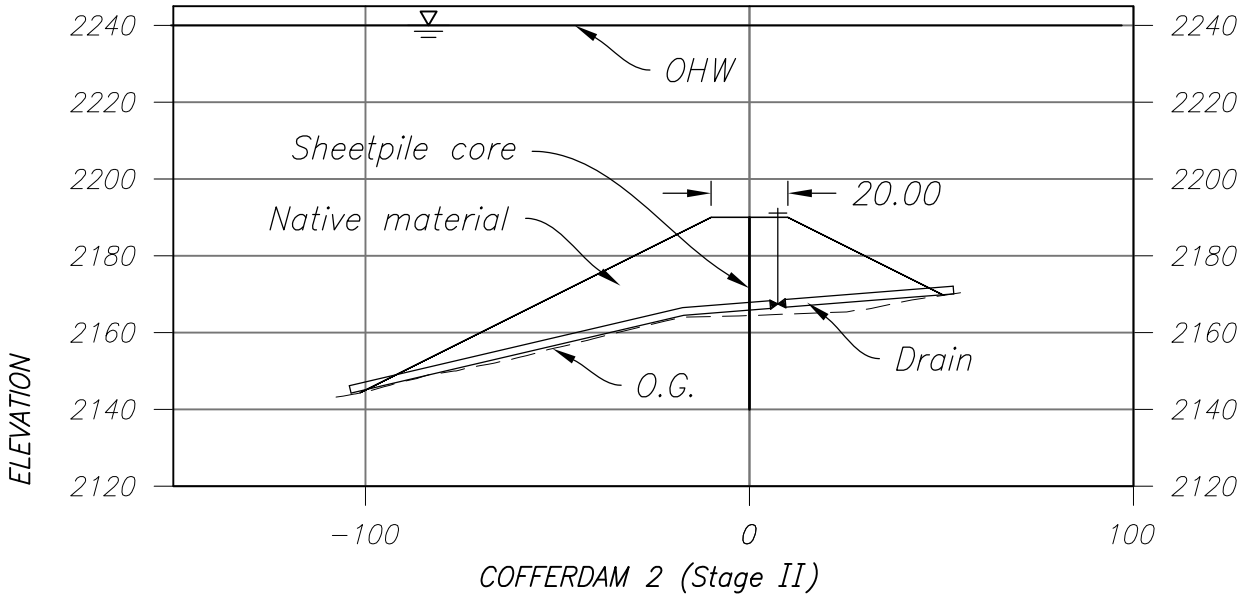

COFFERDAM 2 (Stage II)
SECTION 1

PROJECT:	Cle Elum Dam Juvenile Fish Passage Facilities
REFERENCE:	NWS−2016−103
APPLICANT:	USBR
LOCATION:	47.2449N, −121.0753W Section 10, T20N, R14E

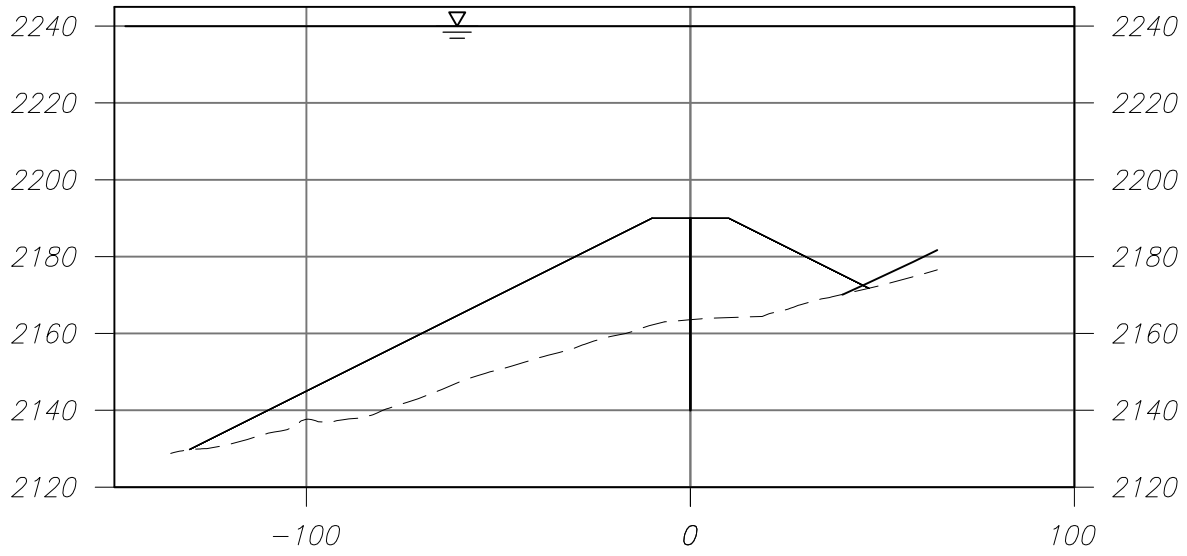

COFFERDAM 2 (Stage II)
SECTION 2

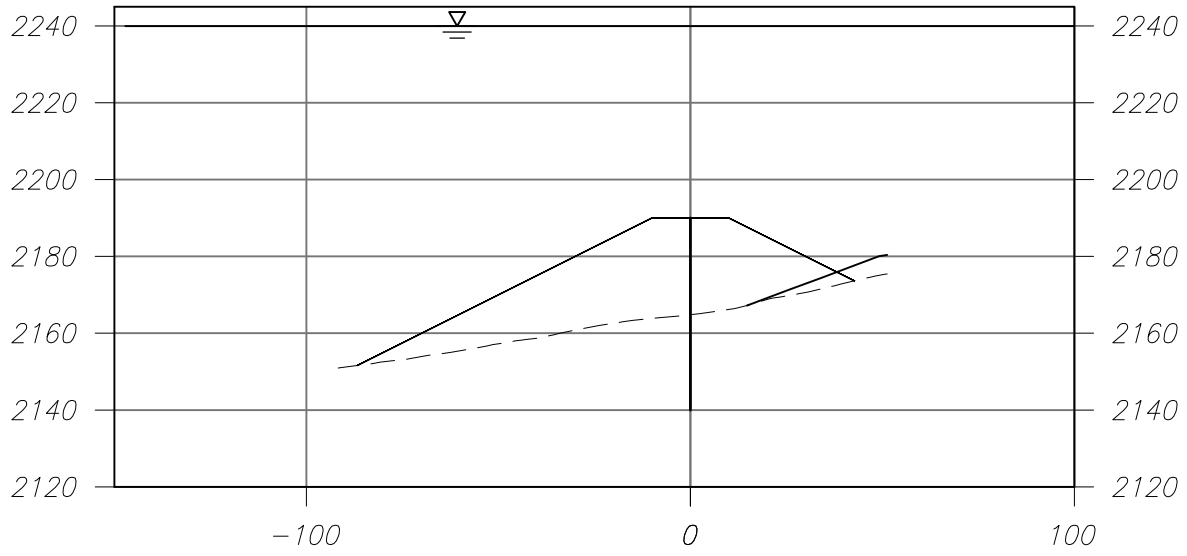

COFFERDAM 2 (Stage II)
SECTION 3

PROJECT:	Cle Elum Dam Juvenile Fish Passage Facilities
REFERENCE:	NWS-2016-103
APPLICANT:	USBR
LOCATION:	47.2449N, -121.0753W Section 10, T20N, R14E

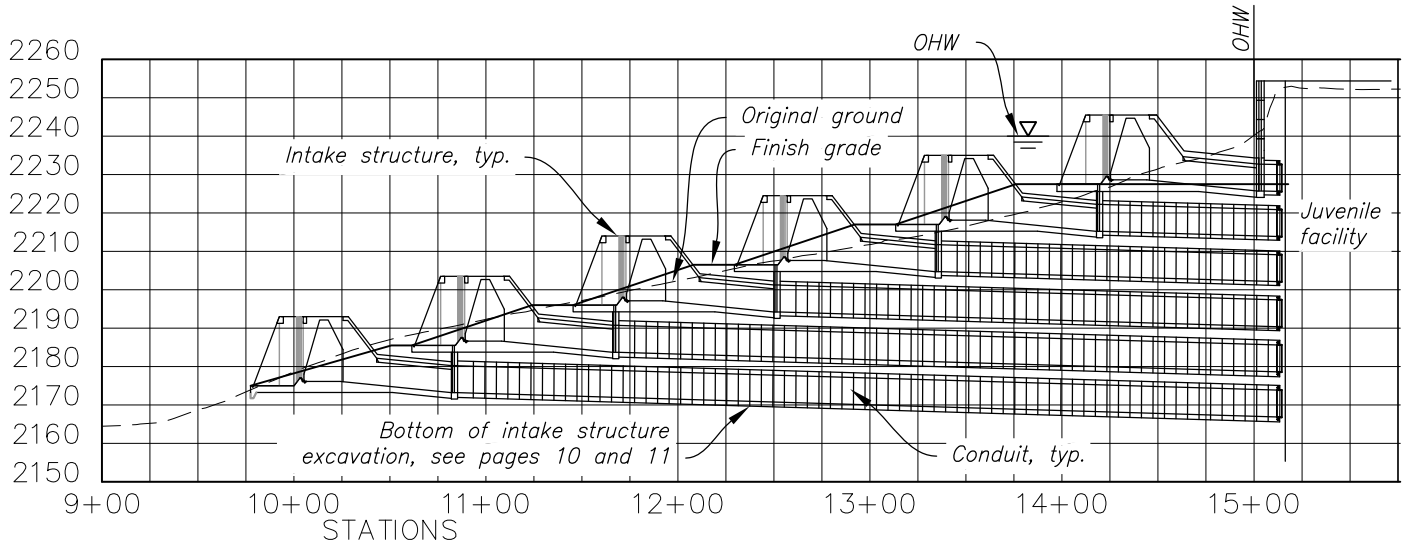

Intake Structure (Stage II)
Profile

PROJECT:	Cle Elum Dam Juvenile Fish Passage Facilities
REFERENCE:	NWS–2016–103
APPLICANT:	USBR
LOCATION:	47.2449N, –121.0753W Section 10, T20N, R14E

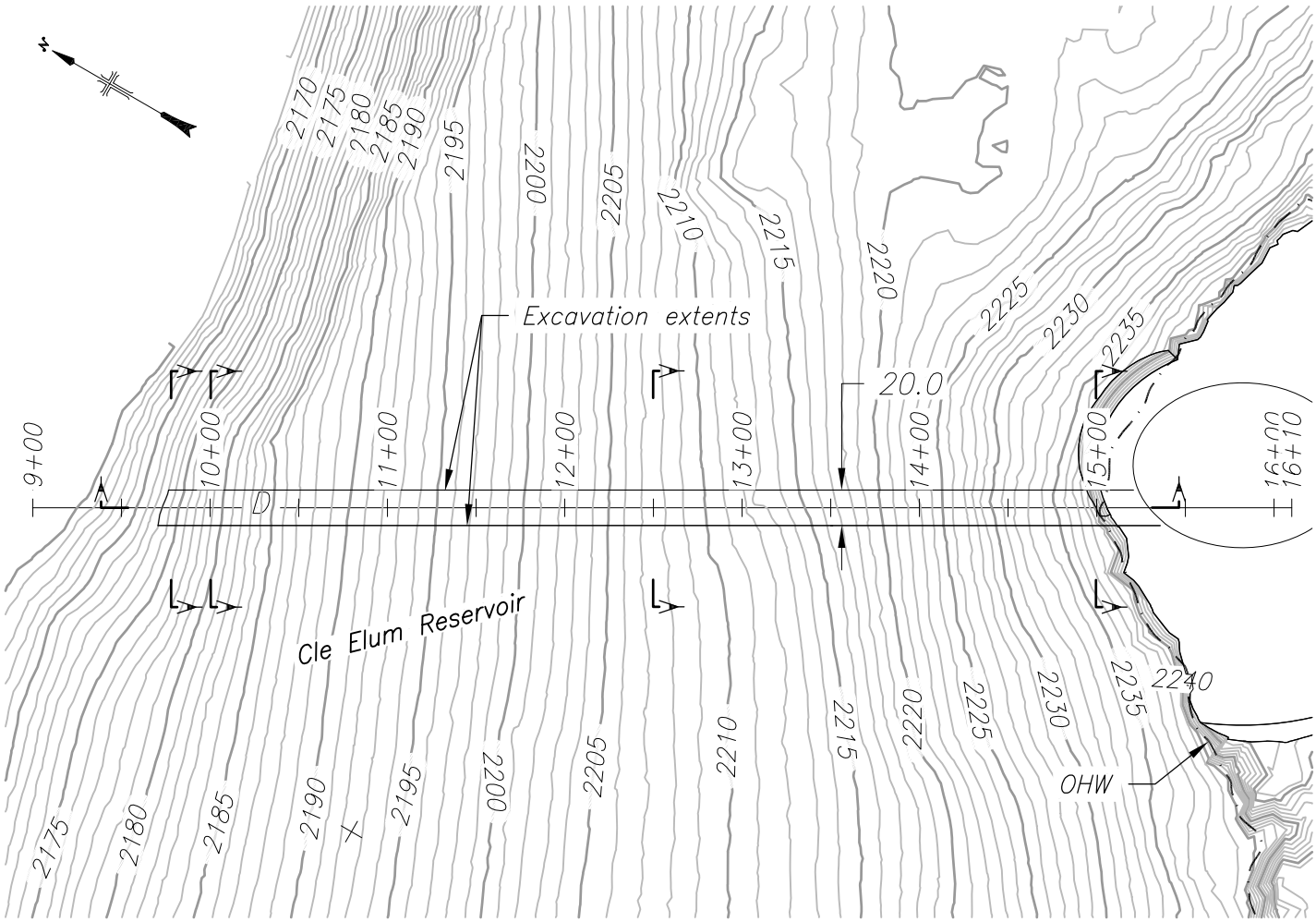

Intake Structure Excavation (Stage II)

Plan

0 100' 200'

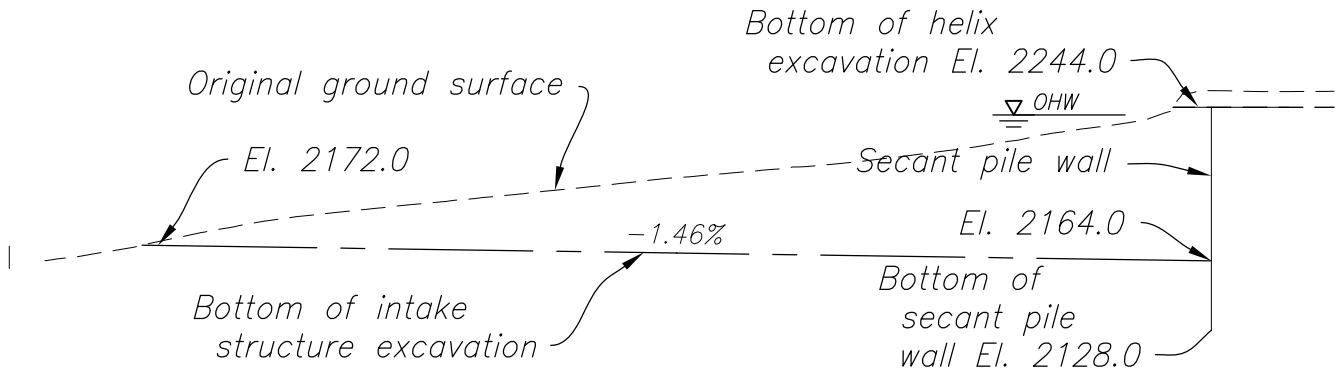

Intake Structure Excavation (Stage II)

Profile

PROJECT:	Cle Elum Dam Juvenile Fish Passage Facilities
REFERENCE:	NWS-2016-103
APPLICANT:	USBR
LOCATION:	47.2449N, -121.0753W Section 10, T20N, R14E

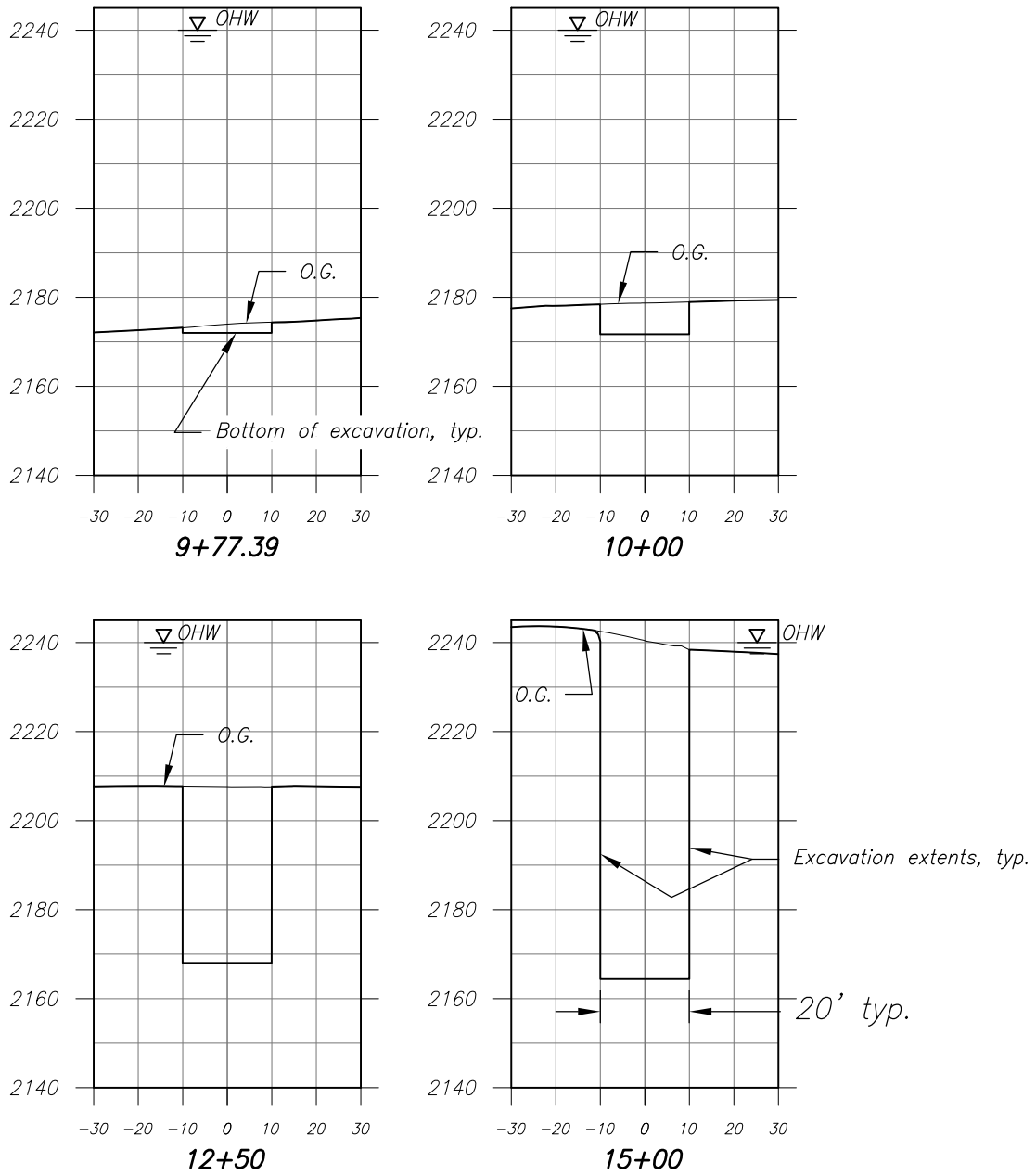

Excavation for Intake Structure (Stage II)
Sections

PROJECT:	Cle Elum Dam Juvenile Fish Passage Facilities
REFERENCE:	NWS−2016−103
APPLICANT:	USBR
LOCATION:	47.2449N, −121.0753W Section 10, T20N, R14E

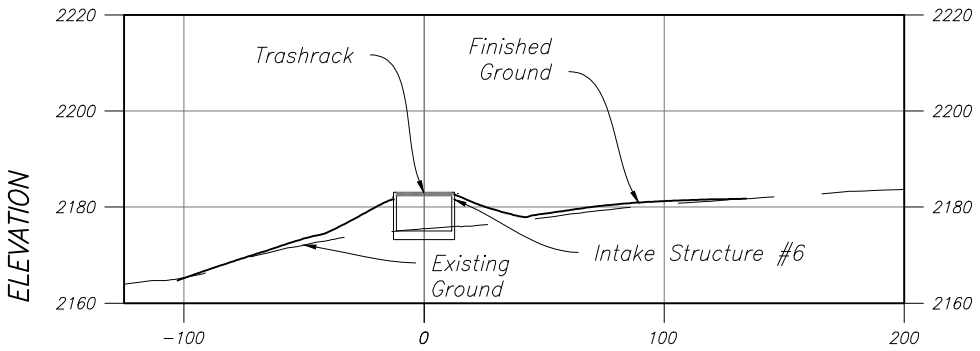

SECTION D–D (Stage II)

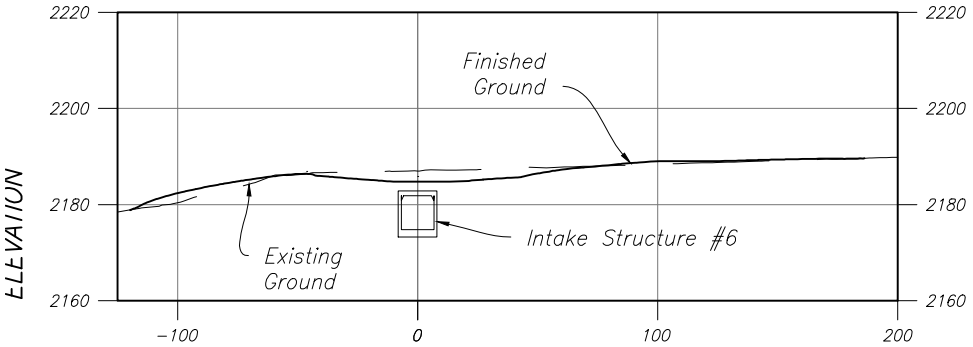

SECTION E–E (Stage II)

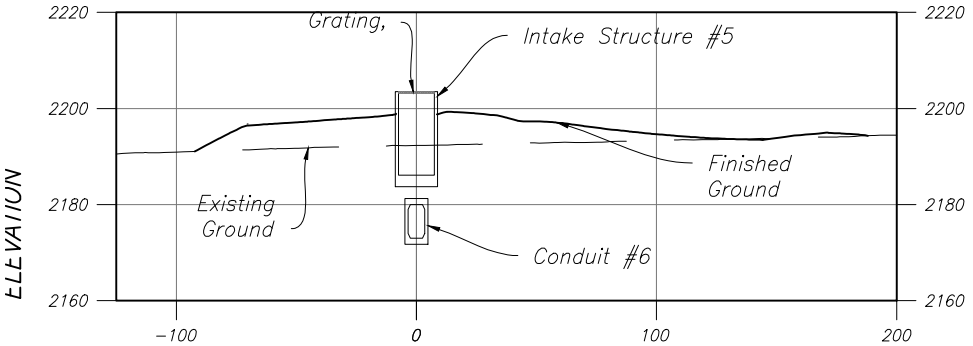

SECTION F–F (Stage II)

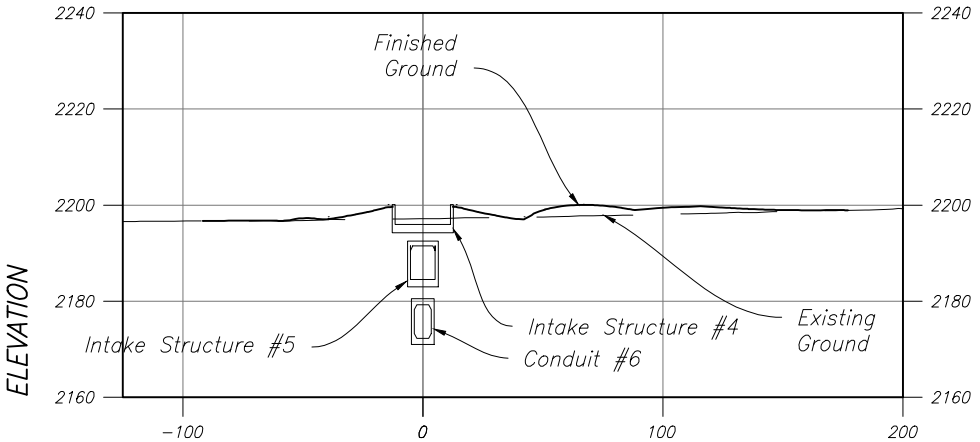

SECTION G–G (Stage II)

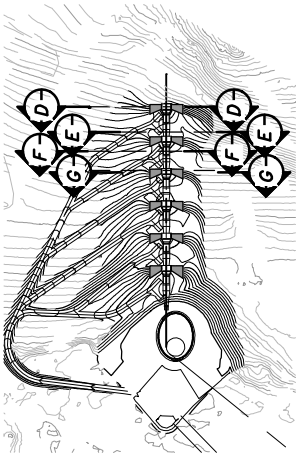

KEY PLAN
(Stage II)

N

Horizontal Scale 1" = 80'
Vertical Scale 1" = 40'

80 0 80 160 240

SCALE OF FEET

PROJECT:	Cle Elum Dam Juvenile Fish Passage Facilities
REFERENCE:	NWS–2016–103
APPLICANT:	USBR
LOCATION:	47.2449N, –121.0753W Section 10, T20N, R14E

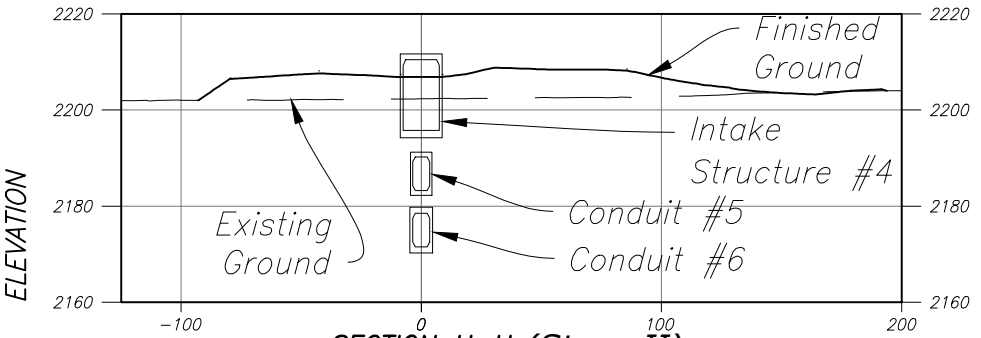

SECTION H–H (Stage II)

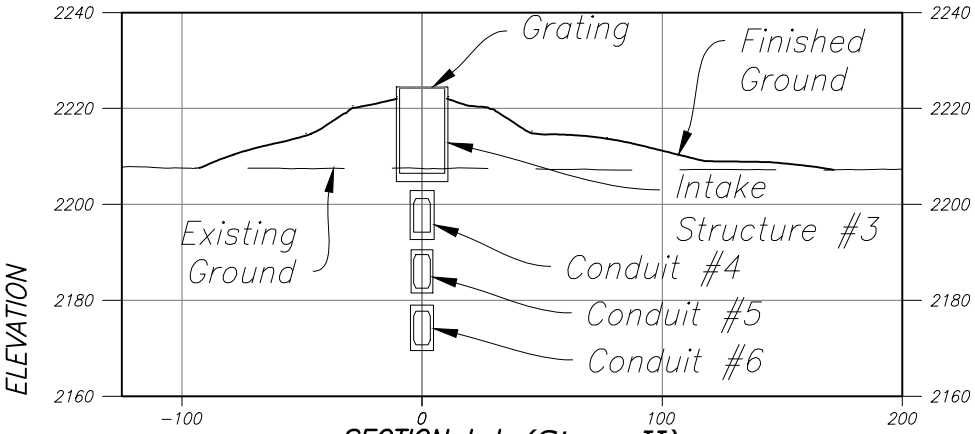

SECTION I–I (Stage II)

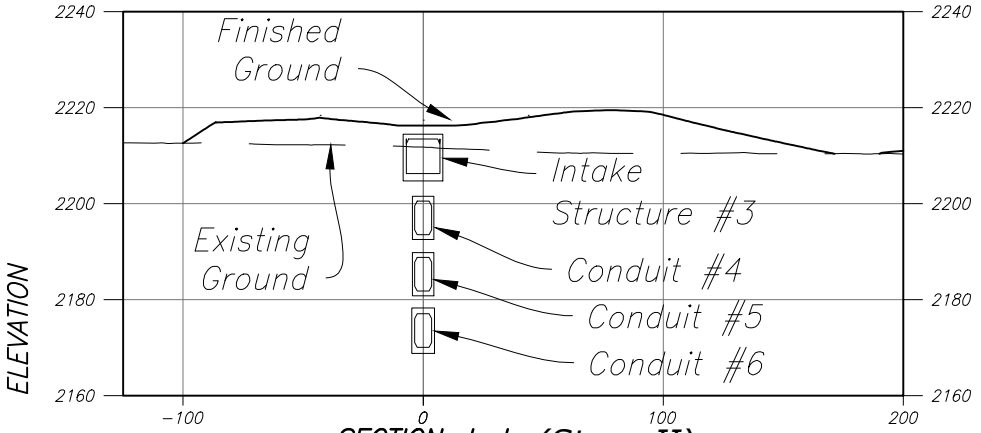

SECTION J–J (Stage II)

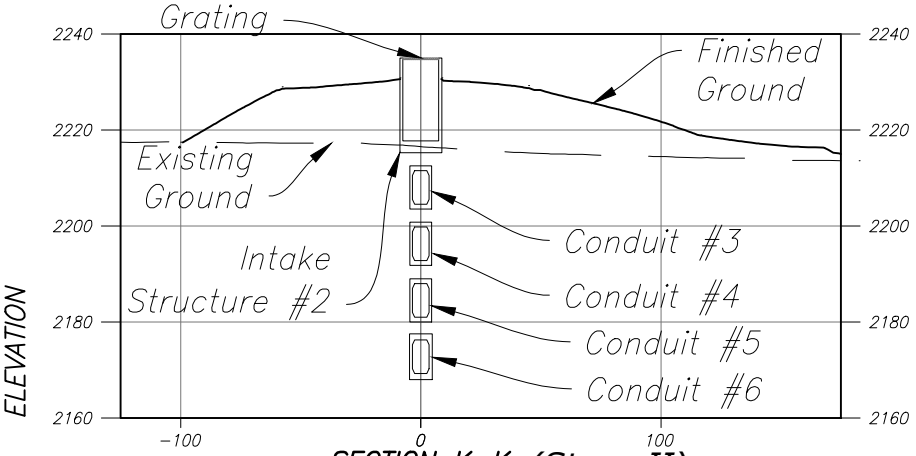

SECTION K–K (Stage II)

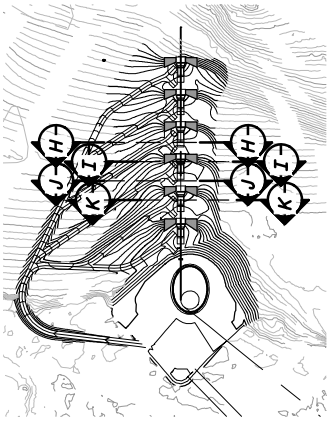

KEY PLAN
(Stage II)

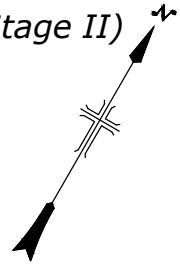

80 0 80 160 240

SCALE OF FEET

Horizontal Scale 1" = 80'
Vertical Scale 1" = 40'

PROJECT:	Cle Elum Dam Juvenile Fish Passage Facilities
REFERENCE:	NWS–2016–103
APPLICANT:	USBR
LOCATION:	47.2449N, −121.0753W Section 10, T20N, R14E

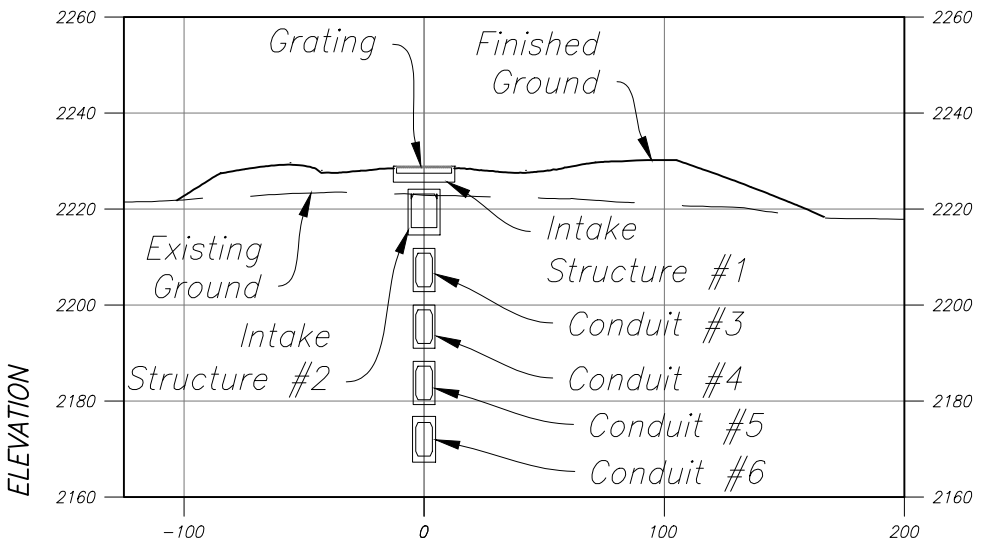

SECTION L–L (Stage II)

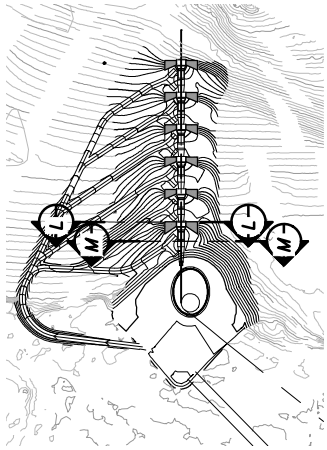

KEY PLAN
(Stage II)

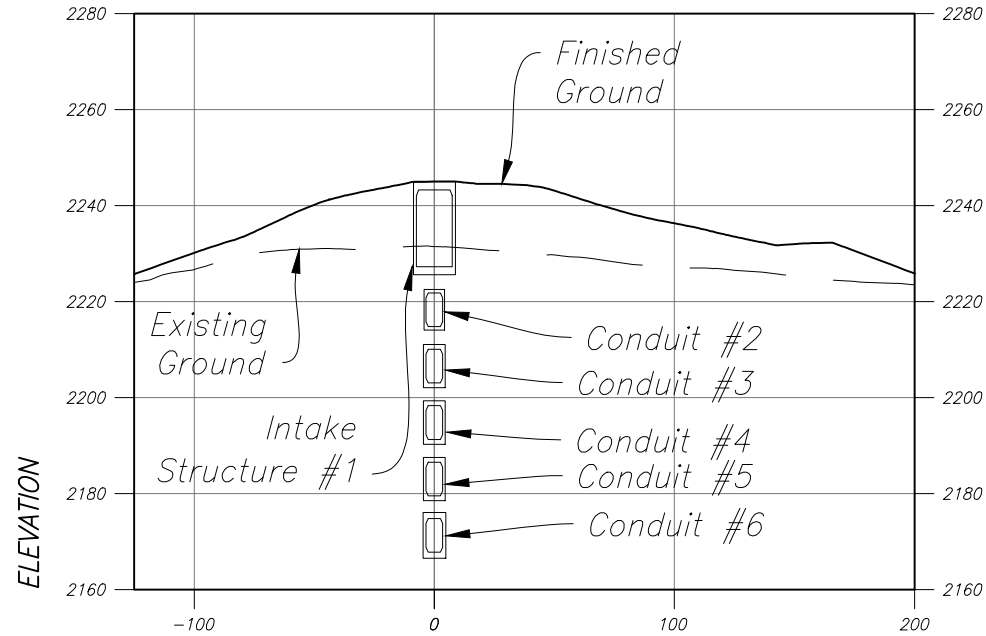

SECTION M–M (Stage II)

Horizontal Scale 1" = 80'
Vertical Scale 1" = 40'

80 0 80 160 240
SCALE OF FEET

PROJECT:	Cle Elum Dam Juvenile Fish Passage Facilities
REFERENCE:	NWS–2016–103
APPLICANT:	USBR
LOCATION:	47.2449N, –121.0753W Section 10, T20N, R14E

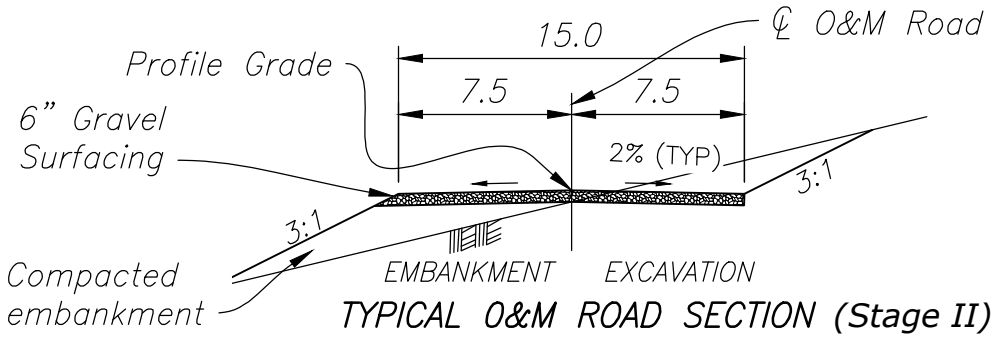

TYPICAL O&M ROAD SECTION (Stage II)

NO SCALE

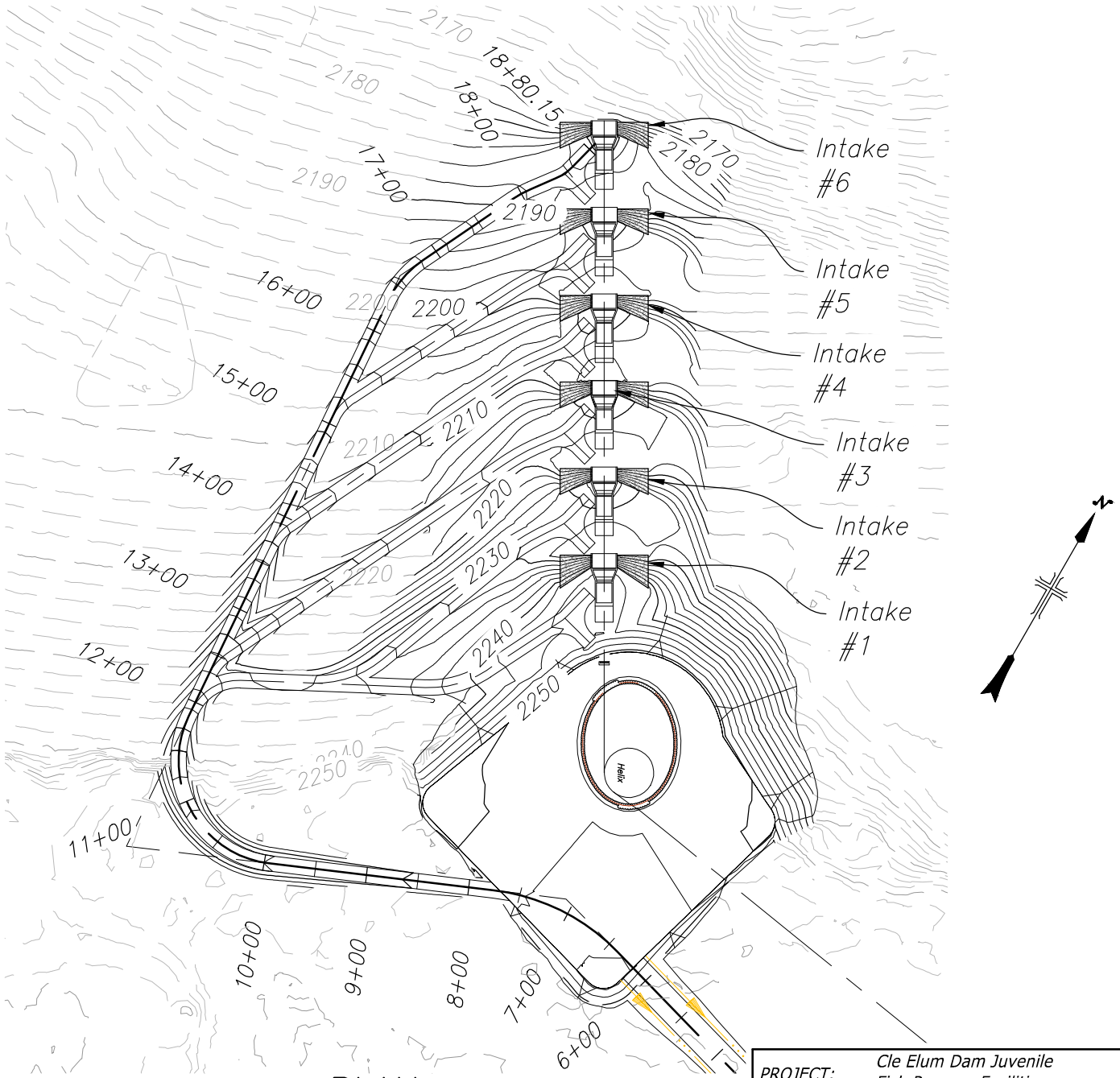

PLAN (Stage II)

150 0 150 300 600

SCALE OF FEET

1"=150'

PROJECT:	Cle Elum Dam Juvenile Fish Passage Facilities
REFERENCE:	NWS-2016-103
APPLICANT:	USBR
LOCATION:	47.2449N, -121.0753W Section 10, T20N, R14E

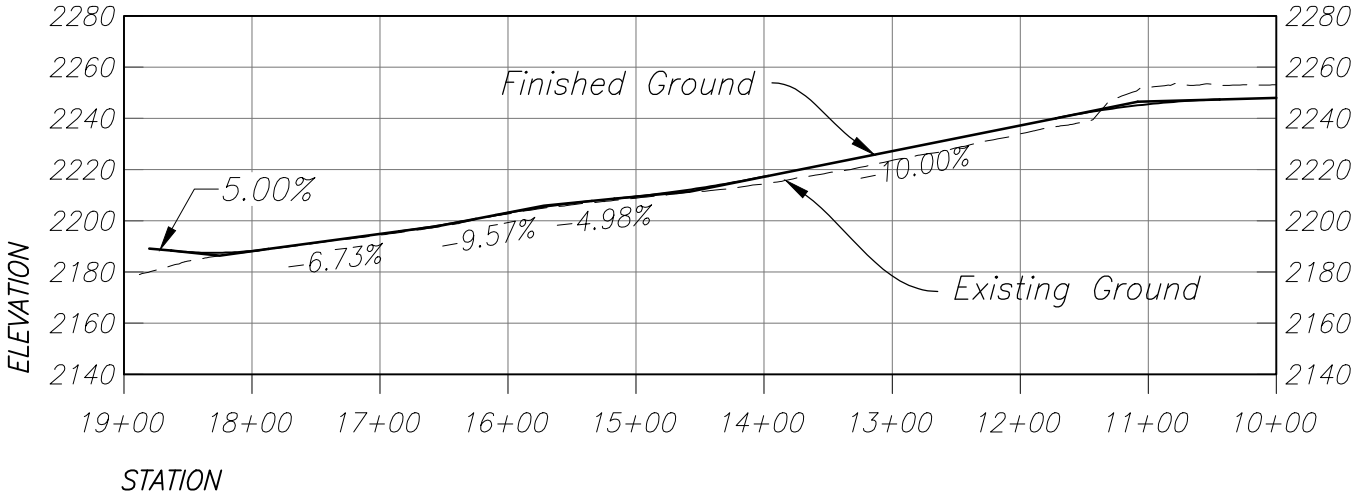

MAIN–O&M ROAD PROFILE

(Stage II)

Horizontal Scale 1" = 150'
Vertical Scale 1" 75'

150 0 150 300 600

SCALE OF FEET
1"=150'

PROJECT:	Cle Elum Dam Juvenile Fish Passage Facilities
REFERENCE:	NWS–2016–103
APPLICANT:	USBR
LOCATION:	47.2449N, –121.0753W Section 10, T20N, R14E
PAGE 16 OF 21	DATE: 01-20-16

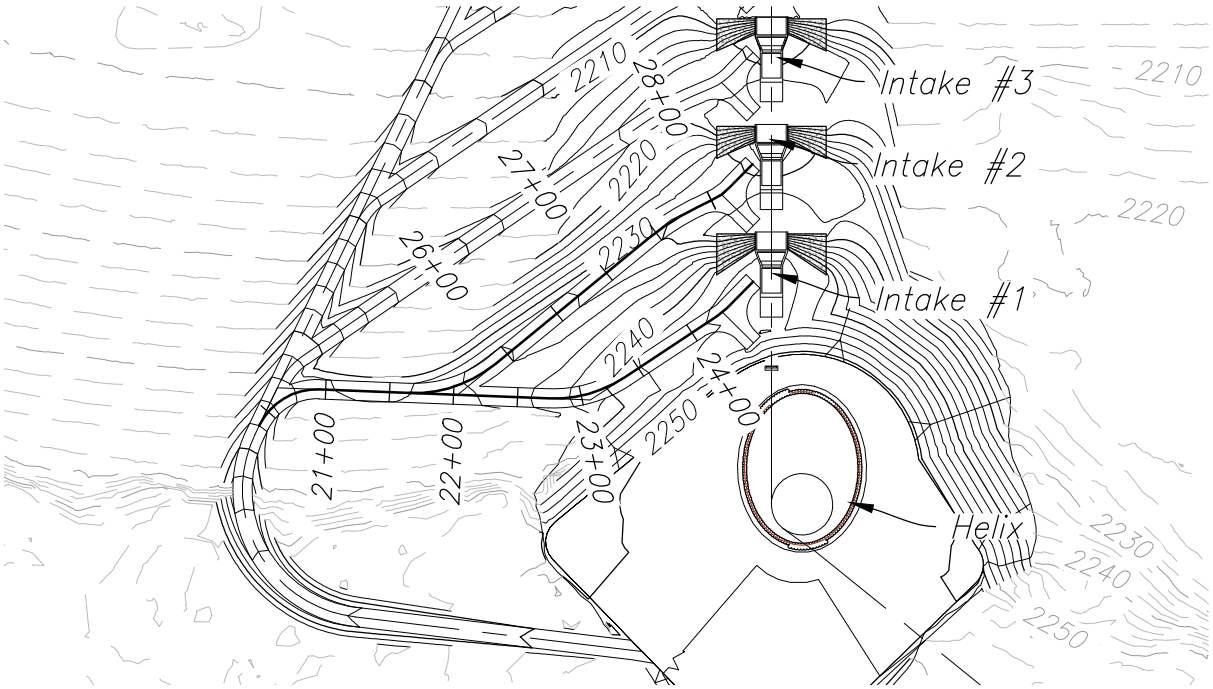

PLAN (Stage II)

150 0 150 300 600

SCALE OF FEET
1"=150'

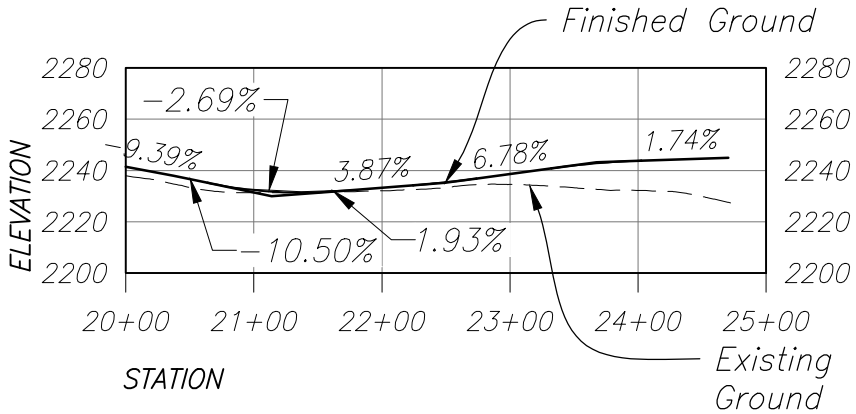

INTAKE 1 LATERAL PROFILE
(Stage II)

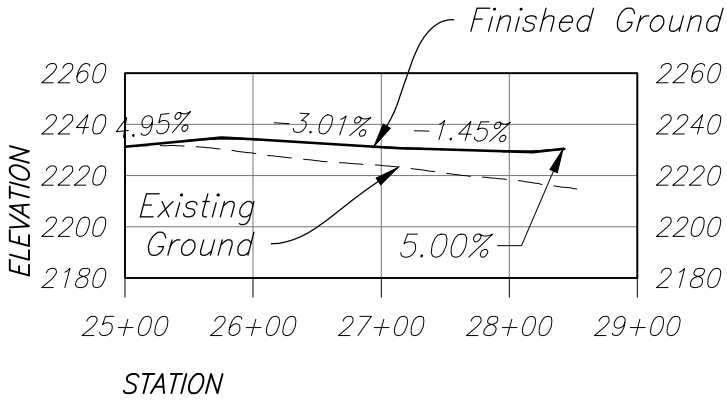

INTAKE 2 LATERAL PROFILE
(Stage II)

Horizontal Scale 1" = 150'
Vertical Scale 1" 75'

PROJECT:	Cle Elum Dam Juvenile Fish Passage Facilities
REFERENCE:	NWS-2016-103
APPLICANT:	USBR
LOCATION:	47.2449N, -121.0753W Section 10, T20N, R14E

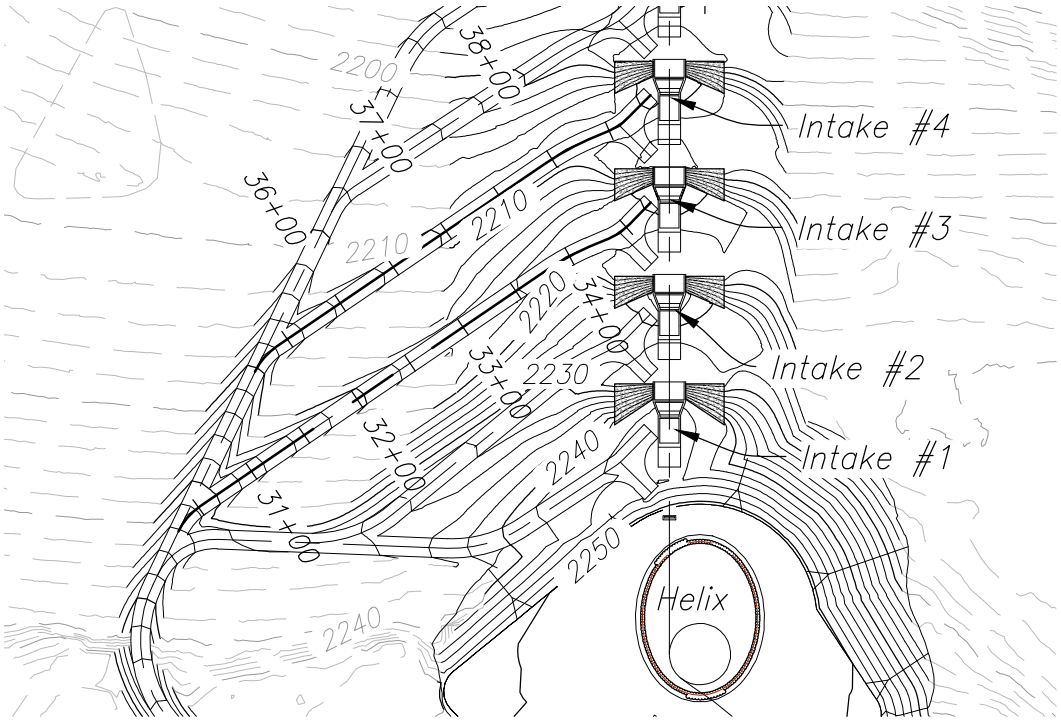

PLAN (Stage II)

150 0 150 300 600

SCALE OF FEET
1"=150'

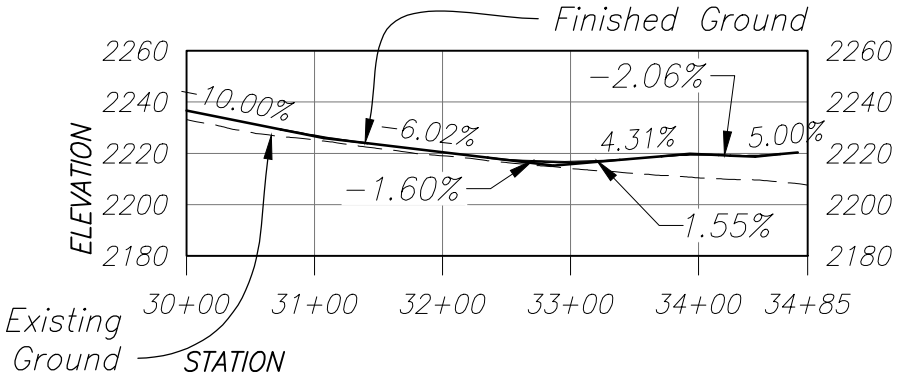

INTAKE 3 LATERAL PROFILE
(Stage II)

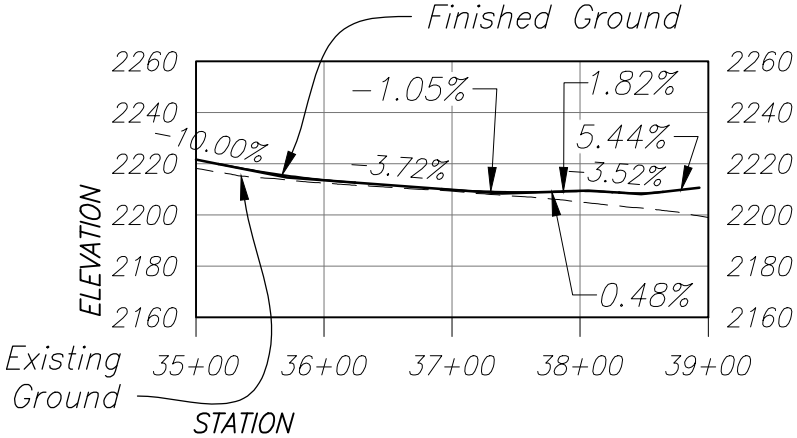

INTAKE 4 LATERAL PROFILE (Stage II)

Horizontal Scale 1" = 150'
Vertical Scale 1" 75'

PROJECT:	Cle Elum Dam Juvenile Fish Passage Facilities
REFERENCE:	NWS-2016-103
APPLICANT:	USBR
LOCATION:	47.2449N, -121.0753W Section 10, T20N, R14E

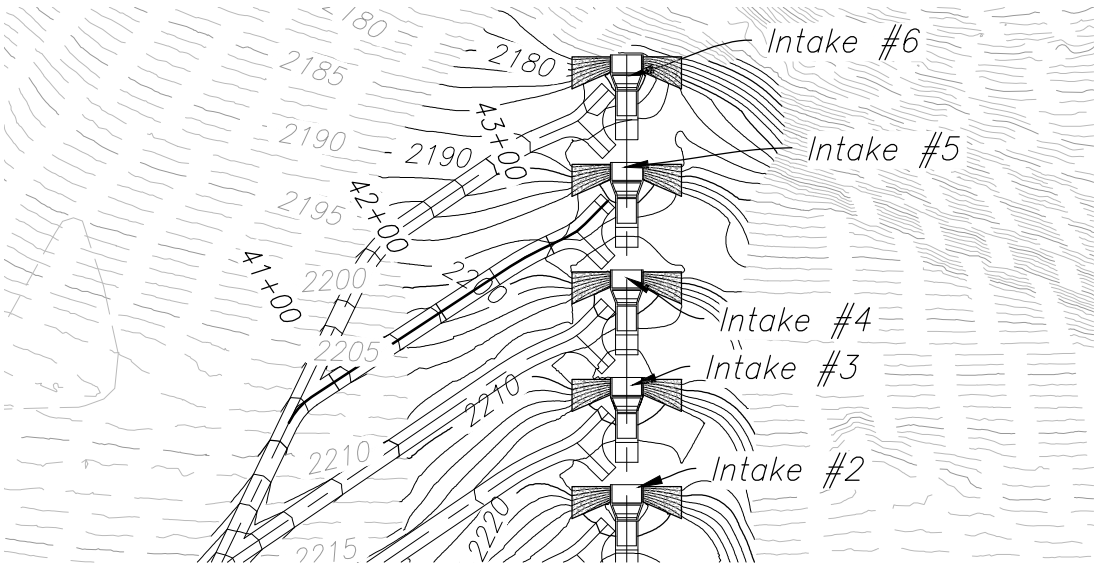

PLAN (Stage II)

150 0 150 300 600

SCALE OF FEET
1"=150'

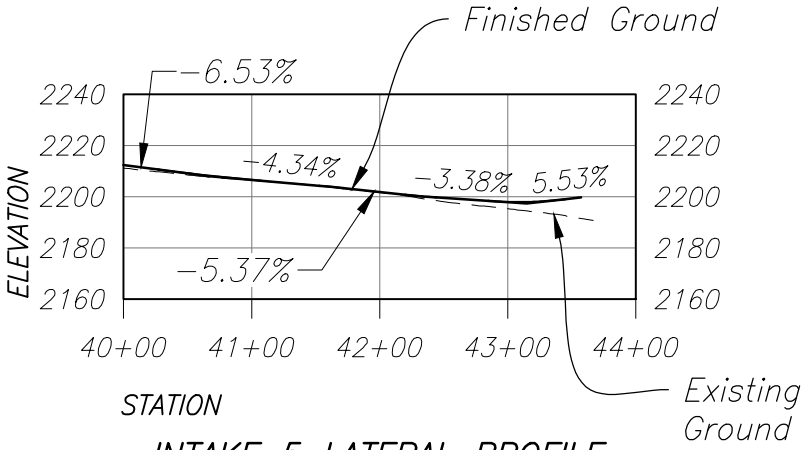

INTAKE 5 LATERAL PROFILE
(Stage II)

Horizontal Scale 1" = 150'
Vertical Scale 1" 75'

PROJECT:	Cle Elum Dam Juvenile Fish Passage Facilities
REFERENCE:	NWS-2016-103
APPLICANT:	USBR
LOCATION:	47.2449N, -121.0753W Section 10, T20N, R14E

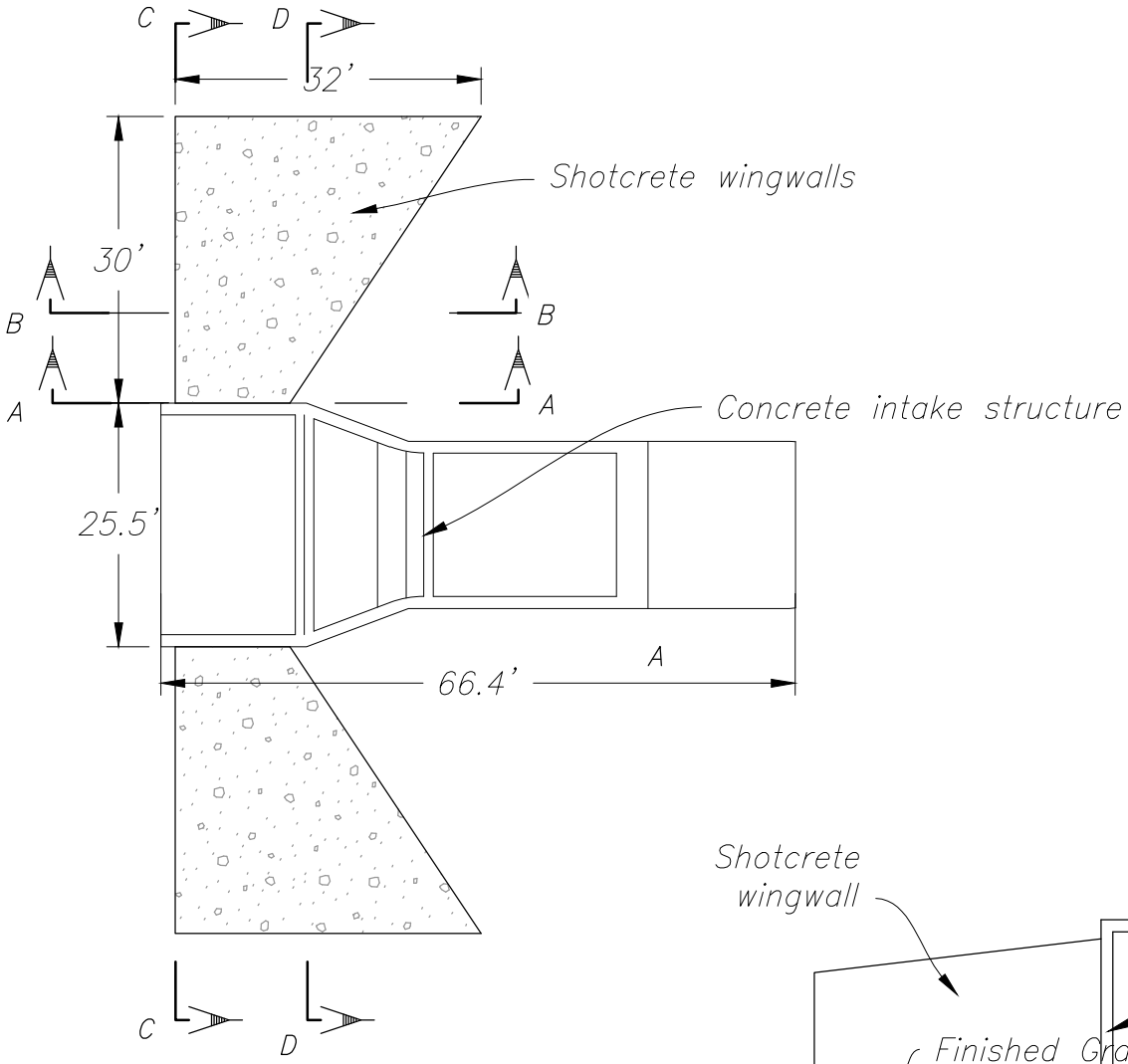

Intake Structure, typ. (Stage II)
(6 structures total)
Plan

0 10' 20'

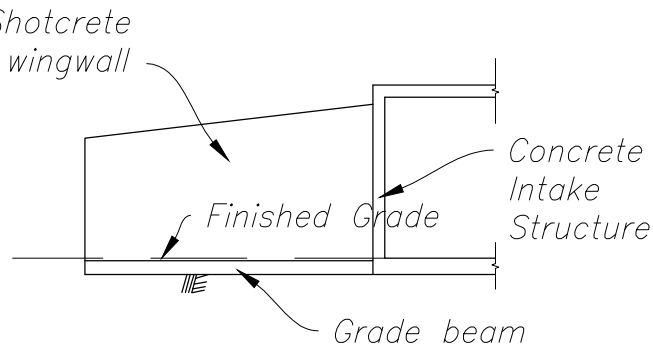

Section C–C
(Stage II)

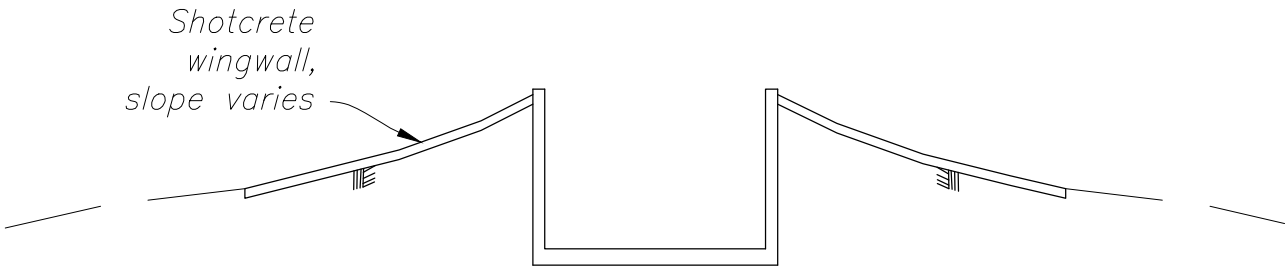

Section D–D
(Stage II)

PROJECT:	Cle Elum Dam Juvenile Fish Passage Facilities
REFERENCE:	NWS–2016–103
APPLICANT:	USBR
LOCATION:	47.2449N, –121.0753W Section 10, T20N, R14E

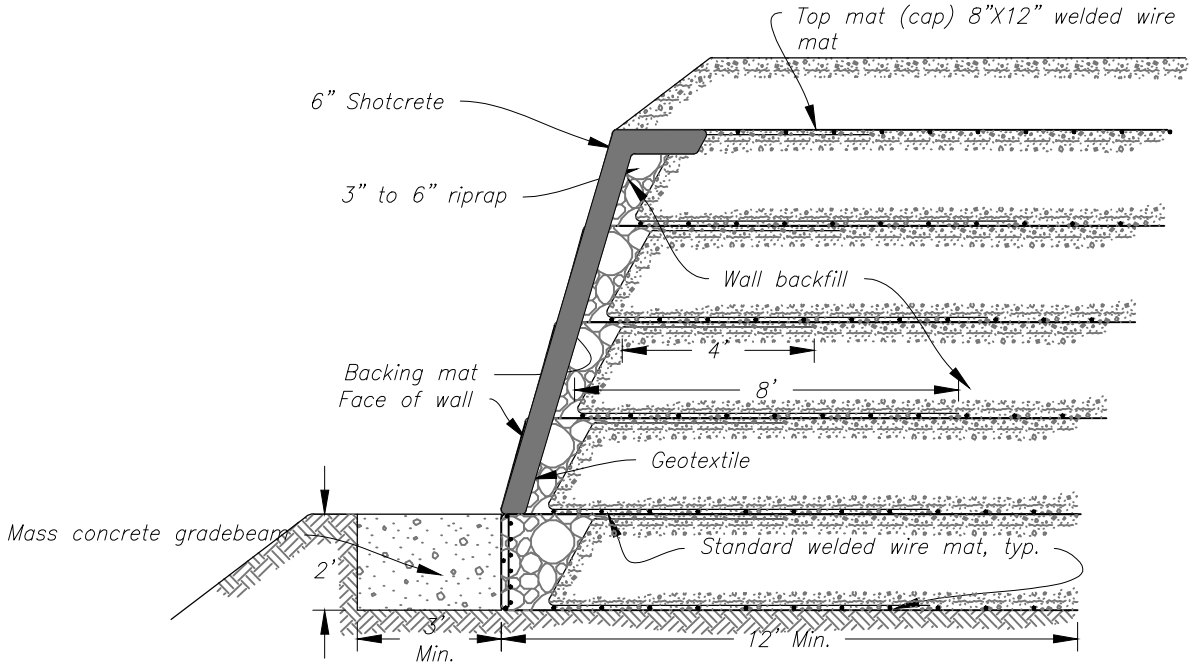

Section A–A

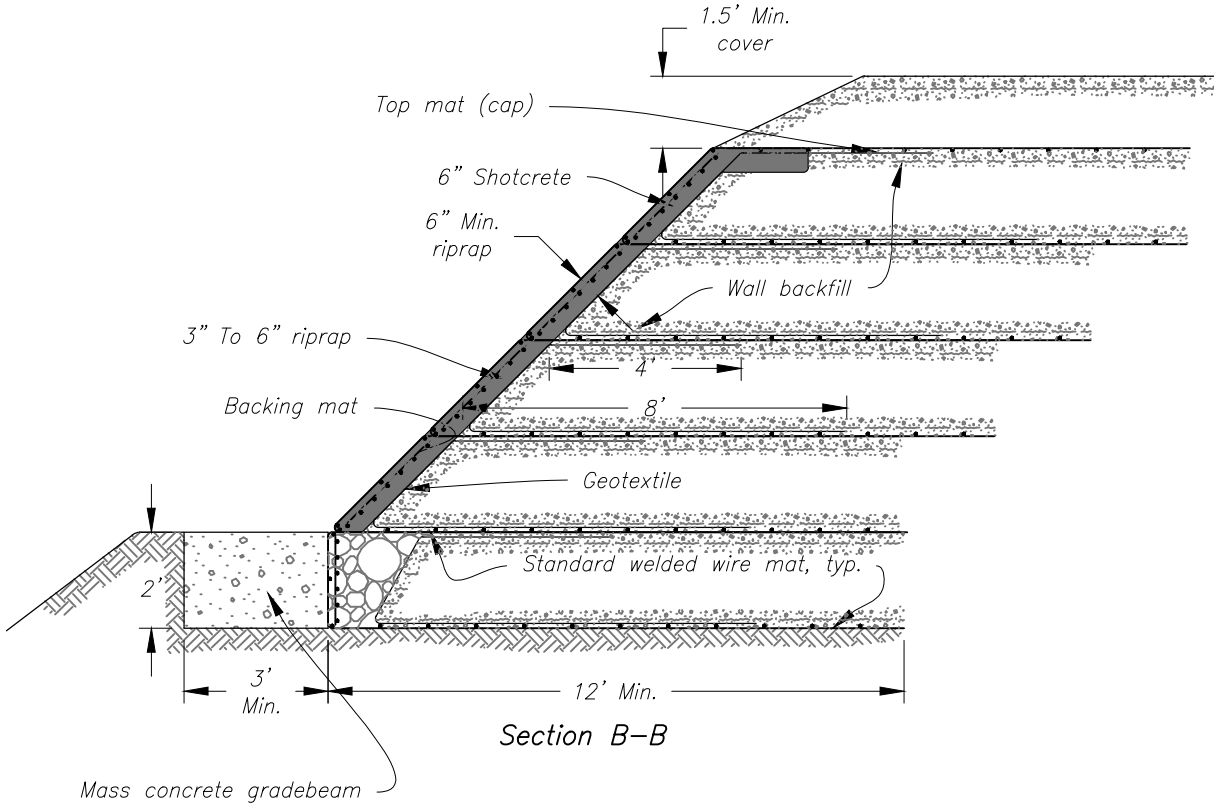

Section B–B

Intake Structure Sections, typ.

1" = 4'

(Stage II)

PROJECT:	Cle Elum Dam Juvenile Fish Passage Facilities
REFERENCE:	NWS–2016–103
APPLICANT:	USBR
LOCATION:	47.2449N, –121.0753W Section 10, T20N, R14E

 DATE: 01–21–16