US Army Corps
of Engineers
Seattle District

Public Notice of Application for Permit

Regulatory Branch
Post Office Box 3755
Seattle, Washington 98124-3755
Telephone (206) 764-3495
ATTN: Olivia Romano, Project Manager

Public Notice Date: April 24, 2009
Expiration Date: May 23, 2009
Reference: NWS-2006-1348
Name: High Tide Seafoods

Interested parties are hereby notified that an application has been received for a Department of the Army permit in accordance with Section 10 of the Rivers and Harbors Act of 1899, for certain work described below and shown on the enclosed drawings.

APPLICANT: High Tide Seafoods
Post Office Box 2141
Port Angeles, Washington 98362
ATTN: Mr. Jim Shefler
Telephone: (360) 452-8488

AGENT: Westech Company
Post Office Box 2876
Port Angeles, Washington 98362
ATTN: Mr. Bradford Shea
Telephone: (360) 565-1333

LOCATION: In Neah Bay, in Makah Nation, town of Neah Bay, Clallam County, Washington.

WORK: Demolition and replacement of existing pier and repair to the existing fish loading dock. Work includes the demolition of an existing 410-foot by 16-foot wooden pier, removal about 350 creosote-treated timber piles and replacement of the existing pier with precast concrete decking, pile caps and 113 closed-bottom 12-inch steel piling. Repair of an existing 169-foot by 90-foot fish loading dock includes the replacement of 31 creosote-treated wood fender piles with 31 Chemonite-treaded wooden fender piles and replacement of 85 creosote-treated timber support piles with 40 closed-bottom 12-inch steel piles. Section of the dock's decking would be replaced with precast concrete decking and some wood boards would be replaced along the perimeter of the dock. All piles would be installed using vibratory method and proofed with impact pile driver. All steel piles would be filled with concrete.

PURPOSE: To resume fish off-loading operations at the pier.

ENDANGERED SPECIES: The Endangered Species Act (ESA) requires federal agencies to consult with the National Marine Fisheries Service (NMFS) and/or U.S. Fish and Wildlife Service (USFWS) pursuant to Section 7 of ESA on all actions that may affect a species listed (or proposed for listing) under the ESA as threatened or endangered or any designated critical habitat.

ESSENTIAL FISH HABITAT: The Magnuson-Stevens Fishery Conservation and Management Act, as amended by the Sustainable Fisheries Act of 1996, requires all Federal agencies to consult with the NMFS on all actions, or proposed actions, permitted, funded, or undertaken by the agency, that may adversely affect Essential Fish Habitat (EFH). The proposed action would impact EFH in the project area. The U.S. Army Corps of Engineers (Corps) has determined that the proposed action will not adversely affect designated EFH for federally managed fisheries in Washington waters. No further EFH consultation is necessary.

CULTURAL RESOURCES: The District Engineer has reviewed the latest published version of the National Register of Historic Places, lists of properties determined eligible and other sources of information. There are no recorded historic properties within the permit area. The proposed work is of such a limited nature and extent that little likelihood exists for the project to impinge upon an unrecorded historic property. The District Engineer invites responses to this public notice from Native American Nations or tribal governments; Federal, State, and local agencies; historical and archeological societies; and other parties likely to have knowledge of or concerns with historic properties in the area. This public notice initiates consultation under Section 106 of the National Historic Preservation Act (36 CFR 800.4[a][3]), with any Tribe that has information or concerns with historic properties in the proposed permit area.

PUBLIC HEARING: Any person may request, in writing, within the comment period specified in this notice, that a public hearing be held to consider this application. Requests for public hearings shall state, with particularity, the reasons for holding a public hearing.

EVALUATION: The decision whether to issue a permit will be based on an evaluation of the probable impacts, including cumulative impacts, of the proposed activity on the public interest. That decision will reflect the national concern for both protection and utilization of important resources. The benefits, which reasonably may be expected to accrue from the proposal, must be balanced against its reasonably foreseeable detriments. All factors which may be relevant to the proposal will be considered, including the cumulative effects thereof; among those are conservation, economics, aesthetics, general environmental concerns, wetlands, historic properties, fish and wildlife values, flood hazards, floodplain values, land use, navigation, shoreline erosion and accretion, recreation, water supply and conservation, water quality, energy needs, safety, food and fiber production, mineral needs, considerations of property ownership, and, in general, the needs and welfare of the people.

The U.S. Army Corps of Engineers is soliciting comments from the public; Native American Nations or tribal governments; Federal, State, and local agencies and officials; and other interested parties in order to consider and evaluate the impacts of this activity. Any comments received will be considered by the Corps to determine whether to issue, modify, condition or deny a permit for the work. To make this decision, comments are used to assess impacts on endangered species, historic properties, water quality, general environmental effects, and the other public interest factors listed above. Comments are used in the preparation of an Environmental Assessment and/or an Environmental Impact Statement pursuant to the National Environmental Policy Act. Comments are also used to determine the need for a public hearing and to determine the overall public interest of the activity.

COMMENT AND REVIEW PERIOD: Conventional mail or e-mail comments on this public notice will be accepted and made part of the record and will be considered in determining whether it would be in the public interest to authorize this proposal. In order to be accepted, e-mail comments must originate from the author's e-mail account and must include on the subject line of the e-mail message the permit applicant's name and reference number as shown below. All e-mail comments should be sent to olivia.h.romano@usace.army.mil. Conventional mail comments should be sent U.S. Army Corps of Engineers, Regulatory Branch, Post Office Box 3755, Seattle, Washington, 98124-3755. Both conventional mail or e-mail comments must include the permit applicant's name and reference number, as shown below, and the commentor's name, address, and phone number. All comments

whether conventional mail or e-mail must reach this office, no later than the expiration date of this public notice to ensure consideration. Please include the following name and reference number:

High Tide Seafoods, NWS-2006-1348

Encl: Figures 15

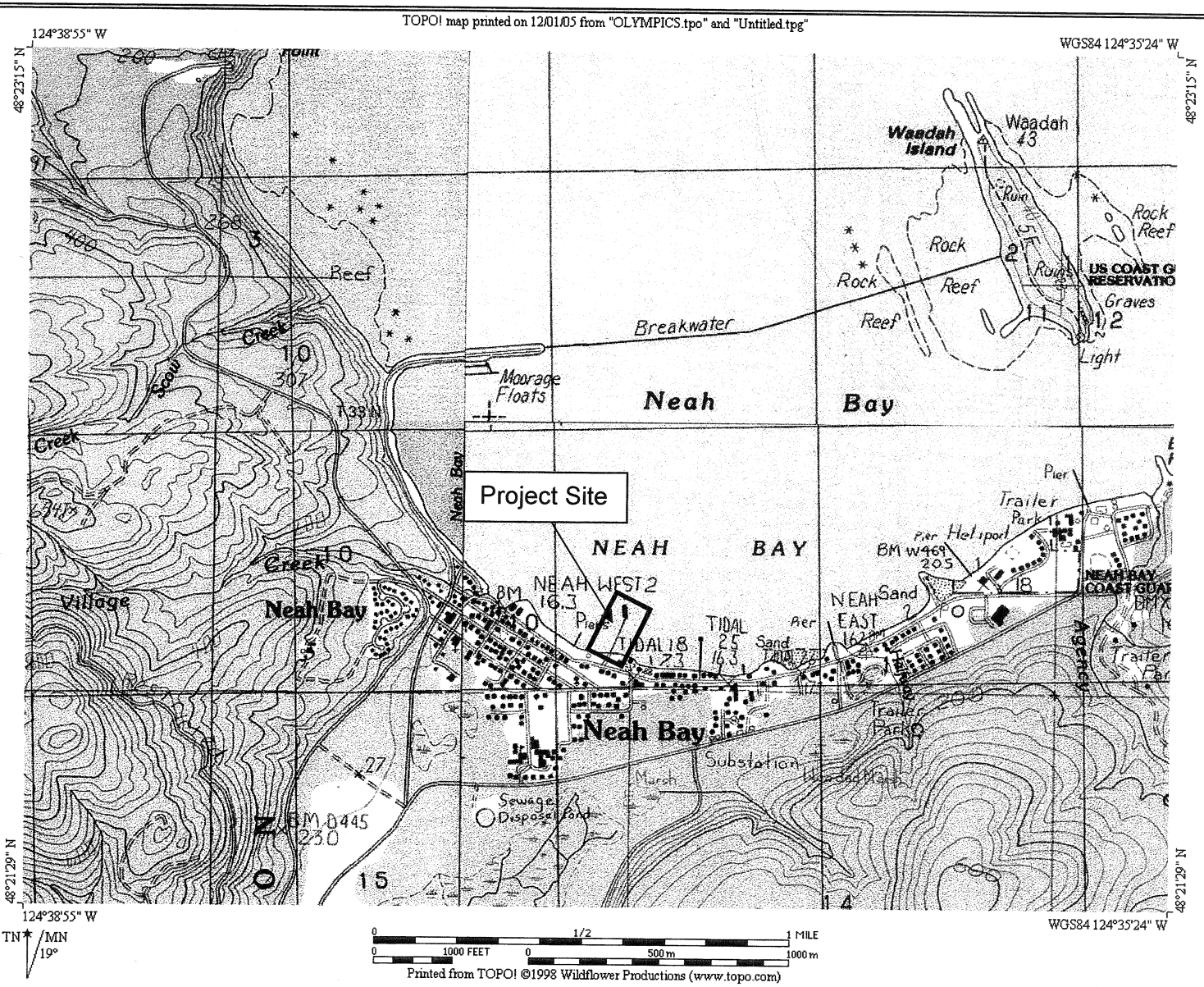

Applicant: High Tide Seafoods
Reference: NWS-2006-1348
Proposed: Pier replacement and dock repair, in Neah Bay, Clallam County, Washington
Date: March 2009 **Sheet 1 of 15**

Figure 2. Vicinity Map

Westech Company 2007
Source: TOPO 1997

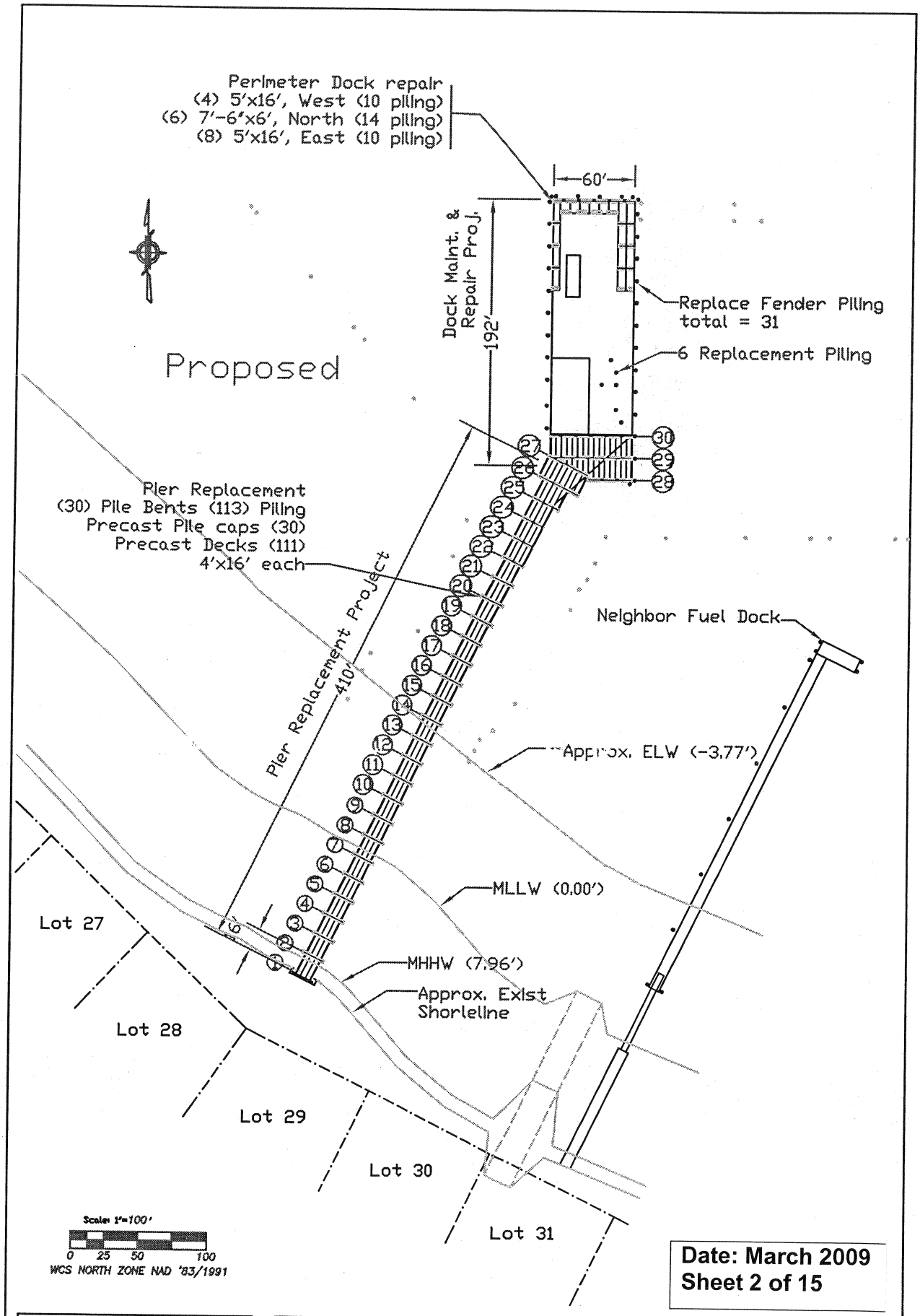

Date: March 2009
Sheet 2 of 15

PURPOSE: Replace Existing Deck & Substructure.
DATUM: NGVD 1991
ADJACENT PROPERTY OWNERS:
1. Washington DNR
2. Makah Indian Nation

APPLICANT: High Tide Seafoods
REFERENCE: NWS-2006-1348-SO
LOCATION: 851 Bayview Ave.

PROPOSED: Pier Replacement Project
IN: Neah Bay
COUNTY: Clallam
STATE: WA

LATITUDE: 48°22'5.4"N
LONGITUDE: 124°37'4.2"W
SECTION: 10
TOWNSHIP: 33N
RANGE: 15W

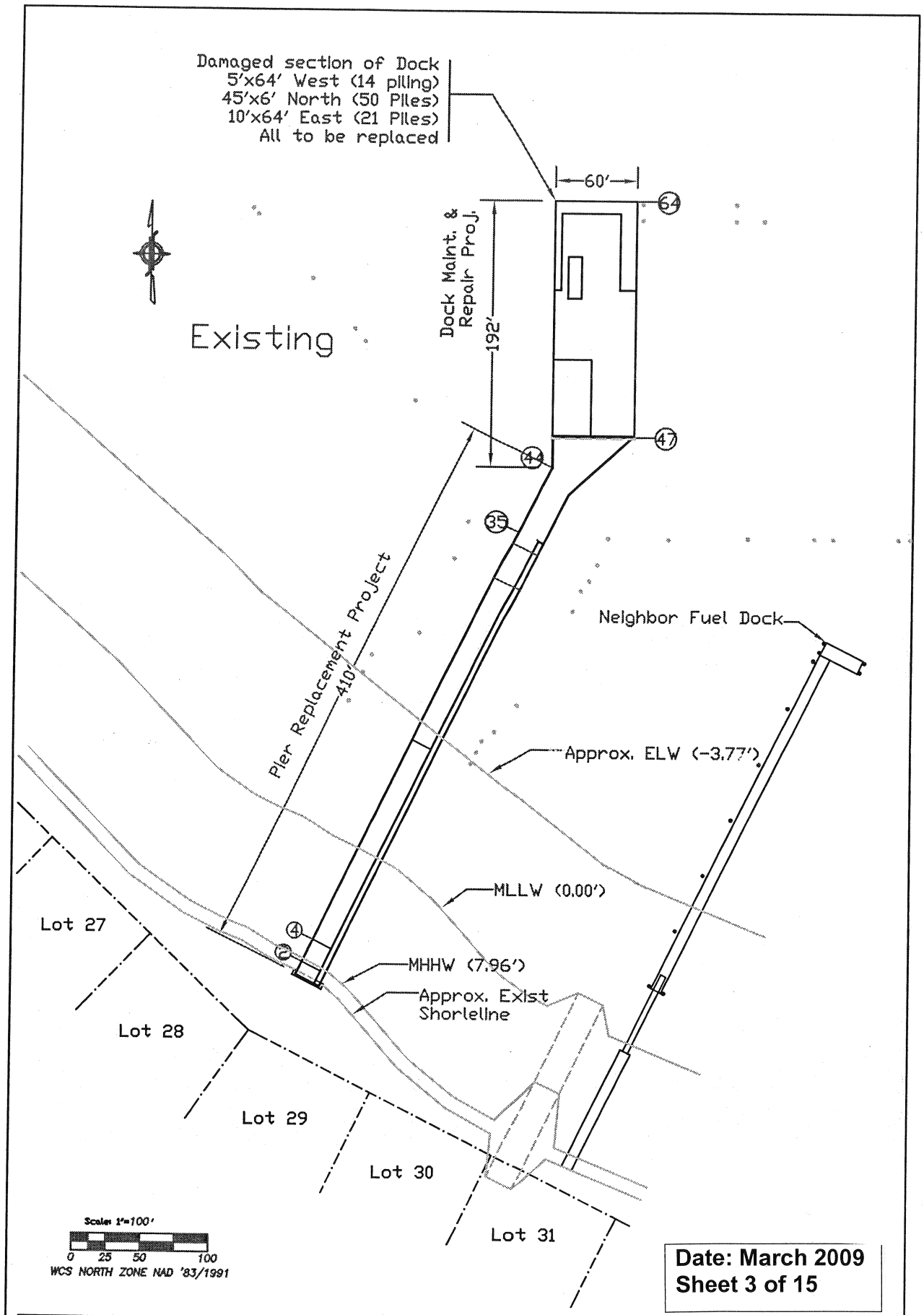

Date: March 2009
Sheet 3 of 15

PURPOSE: Replace Existing Deck & Substructure.
DATUM: NGVD 1991
ADJACENT PROPERTY OWNERS:
1. Washington DNR
2. Makah Indian Nation

APPLICANT: High Tide Seafoods
REFERENCE: NWS-2006-1348-SO
LOCATION: 851 Bayview Ave.

PROPOSED: Pier Replacement Project
IN: Neah Bay
COUNTY: Clallam
STATE: WA

LATITUDE: 48°22'5.4"N
LONGITUDE: 124°37'4.2"W
SECTION: 10
TOWNSHIP: 33N
RANGE: 15W

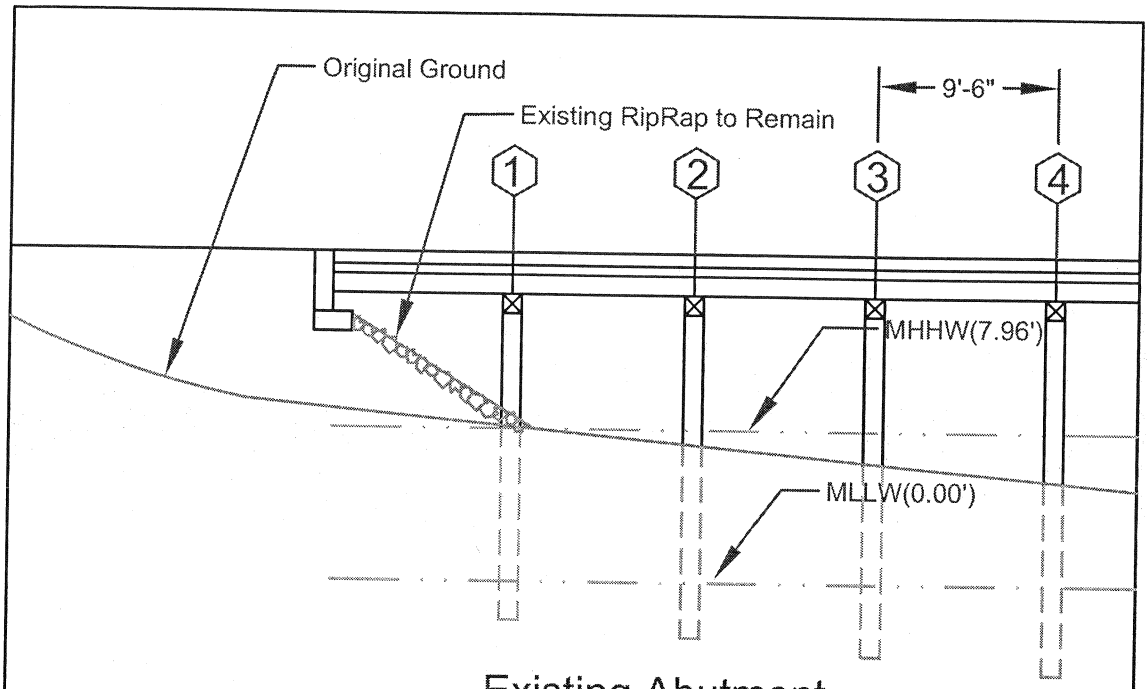

Existing Abutment
Scale: 1"=10'

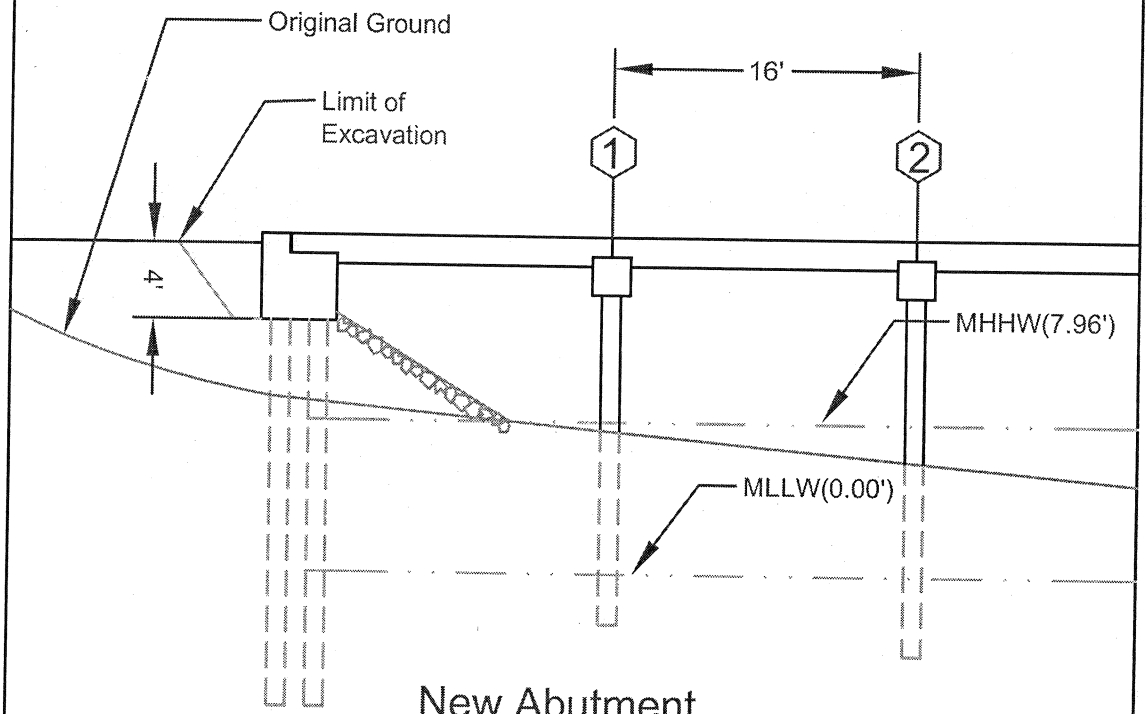

New Abutment
Scale: 1"=10'

Date: March 2009
Sheet 4 of 15

PURPOSE: Replace Existing Deck & Substructure.
DATUM: NGVD 1991
ADJACENT PROPERTY OWNERS:
1. Washington DNR
2. Makah Indian Nation

APPLICANT: High Tide Seafoods
REFERENCE: NWS-2006-1348-SO
LOCATION: 851 Bayview Ave.

PROPOSED: Pier Replacement Project
IN: Neah Bay
COUNTY: Clallam
STATE: WA

LATITUDE: 48°22'5.4"N
LONGITUDE: 124°37'4.2"W
SECTION: 10
TOWNSHIP: 33N
RANGE: 15W

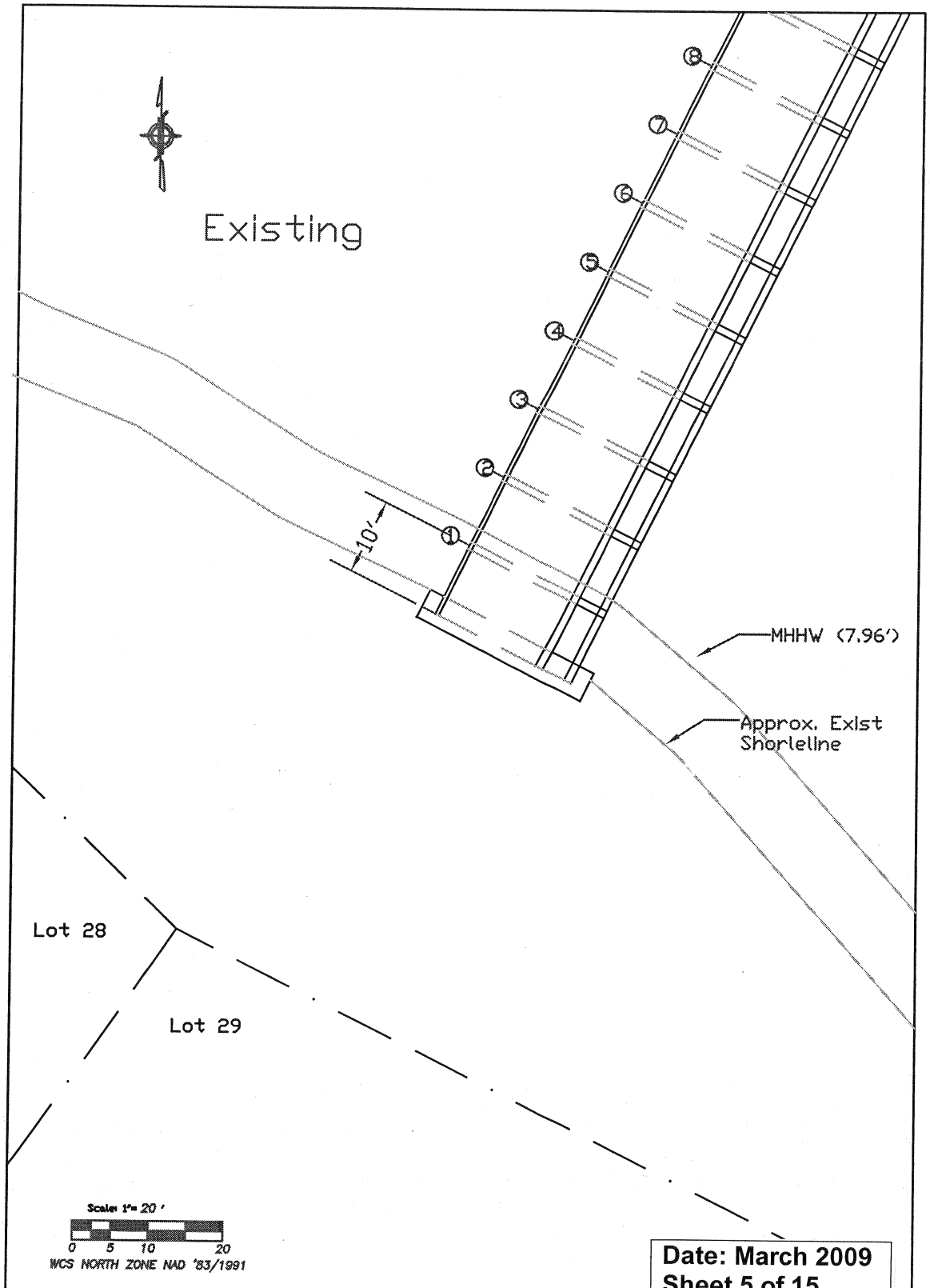

Date: March 2009
Sheet 5 of 15

PURPOSE: Replace Existing Deck & Substructure.
DATUM: NGVD 1991
ADJACENT PROPERTY OWNERS:
1. Washington DNR
2. Makah Indian Nation

APPLICANT: High Tide Seafoods
REFERENCE: NWS-2006-1348-SD
LOCATION: 851 Bayview Ave.

PROPOSED: Pier Replacement Project
IN: Neah Bay
COUNTY: Clallam
STATE: WA

LATITUDE: 48°22'5.4"N
LONGITUDE: 124°37'4.2"W
SECTION: 10
TOWNSHIP: 33N
RANGE: 15W

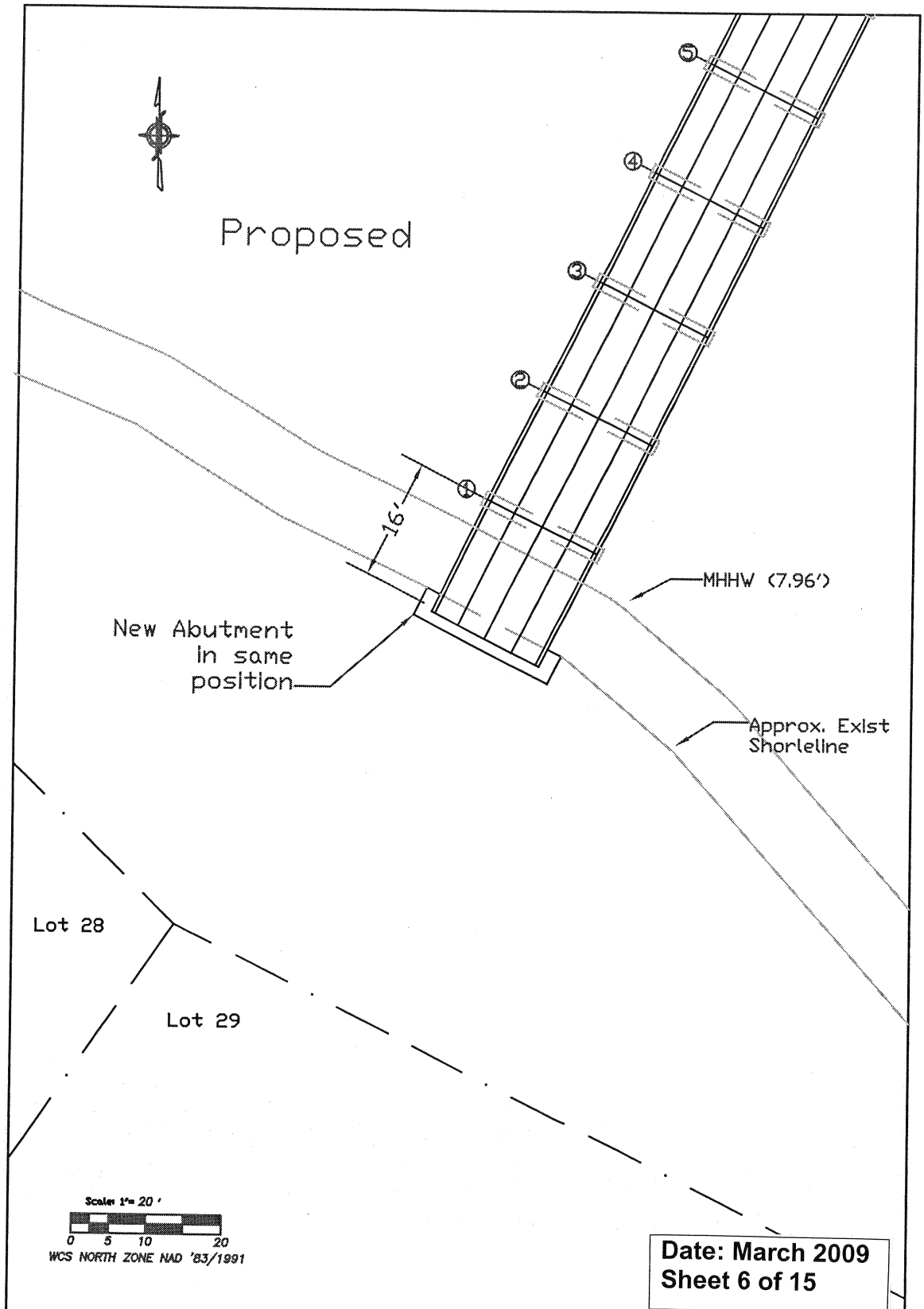

Date: March 2009
Sheet 6 of 15

PURPOSE: Replace Existing Deck & Substructure.
DATUM: NGVD 1991
ADJACENT PROPERTY OWNERS:
1. Washington DNR
2. Makah Indian Nation

APPLICANT: High Tide Seafoods
REFERENCE: NWS-2006-1348-SO
LOCATION: 851 Bayview Ave.

PROPOSED: Pier Replacement Project
IN: Neah Bay
COUNTY: Clallam
STATE: WA

LATITUDE: 48°22'5.4"N
LONGITUDE: 124°37'4.2"W
SECTION: 10
TOWNSHIP: 33N
RANGE: 15W

Work Area Portection
Scale: 1"=20'

Date: March 2009
Sheet 7 of 15

PURPOSE: Replace Existing Deck & Substructure.
DATUM: NGVD 1991
ADJACENT PROPERTY OWNERS:
1. Washington DNR
2. Makah Indian Nation

APPLICANT: High Tide Seafoods
REFERENCE: NWS-2006-1348-SO
LOCATION: 851 Bayview Ave.

PROPOSED: Pier
IN: Neah Bay
COUNTY: Clallam
STATE: WA

LATITUDE: 48°22'5.4"N
LONGITUDE: 124°37'4.2"W
SECTION: 10
TOWNSHIP: 33N
RANGE: 15W

350 Existing unsound Creosote piling to be removed in this project.

Date: March 2009
Sheet 8 of 15

PURPOSE: Replace Existing Deck & Substructure.
DATUM: NGVD 1991
ADJACENT PROPERTY OWNERS:
1. Washington DNR
2. Makah Indian Nation

APPLICANT: High Tide Seafoods
REFERENCE: NWS-2006-1348-SO
LOCATION: 851 Bayview Ave.

PROPOSED: Pier Replacement Project
IN: Neah Bay
COUNTY: Clallam
STATE: WA

LATITUDE: 48°22'5.4"N
LONGITUDE: 124°37'4.2"W
SECTION: 10
TOWNSHIP: 33N
RANGE: 15W

PURPOSE: Replace Existing Deck & Substructure.
DATUM: NGVD 1991
ADJACENT PROPERTY OWNERS:
1. Washington DNR
2. Makah Indian Nation

APPLICANT: High Tide Seafoods
REFERENCE: NWS-2006-1348-SO
LOCATION: 851 Bayview Ave.

PROPOSED: Pier Replacement Project
IN: Neah Bay
COUNTY: Clallam
STATE: WA

LATITUDE: 48°22'5.4"N
LONGITUDE: 124°37'4.2"W
SECTION: 10
TOWNSHIP: 33N
RANGE: 15W

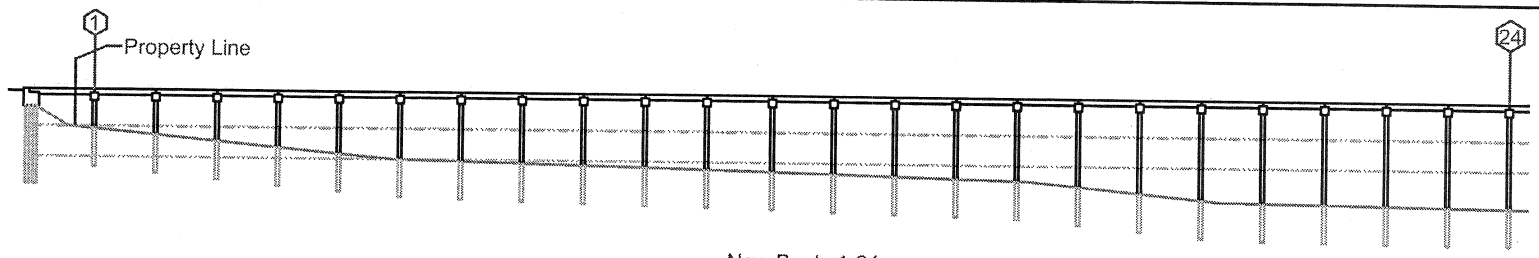

New Bents 1-24
Scale: 1"=50'

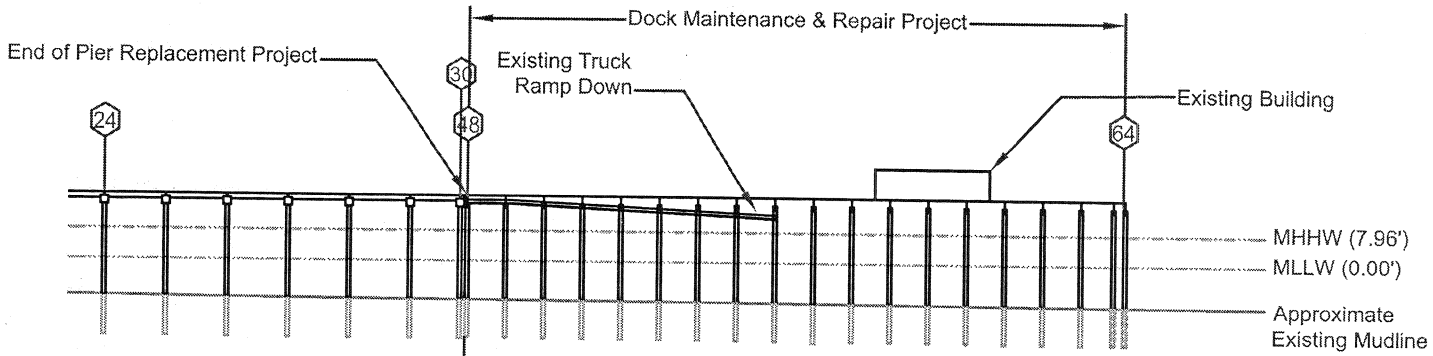

New Bents 24-30

Maintenance & Repair Project bents 48-64.

Scale: 1"=50'

Date: March 2009
Sheet 9 of 15

113 Galvanized Steel Piling
closed bottom
filled with concrete to be
installed in this project.

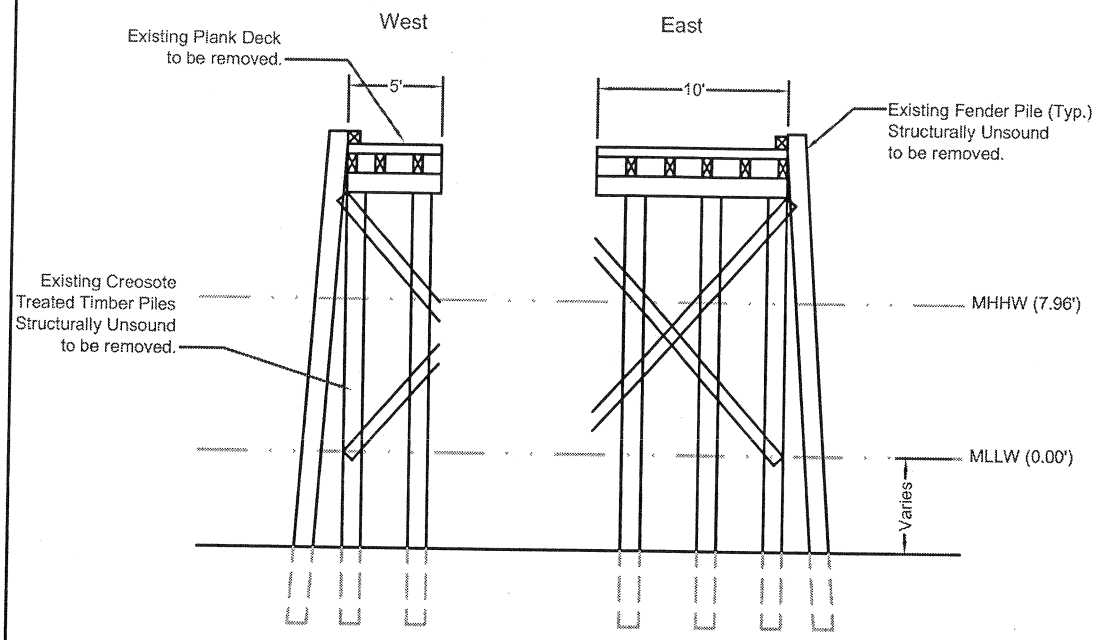

Perimeter Dock Damage

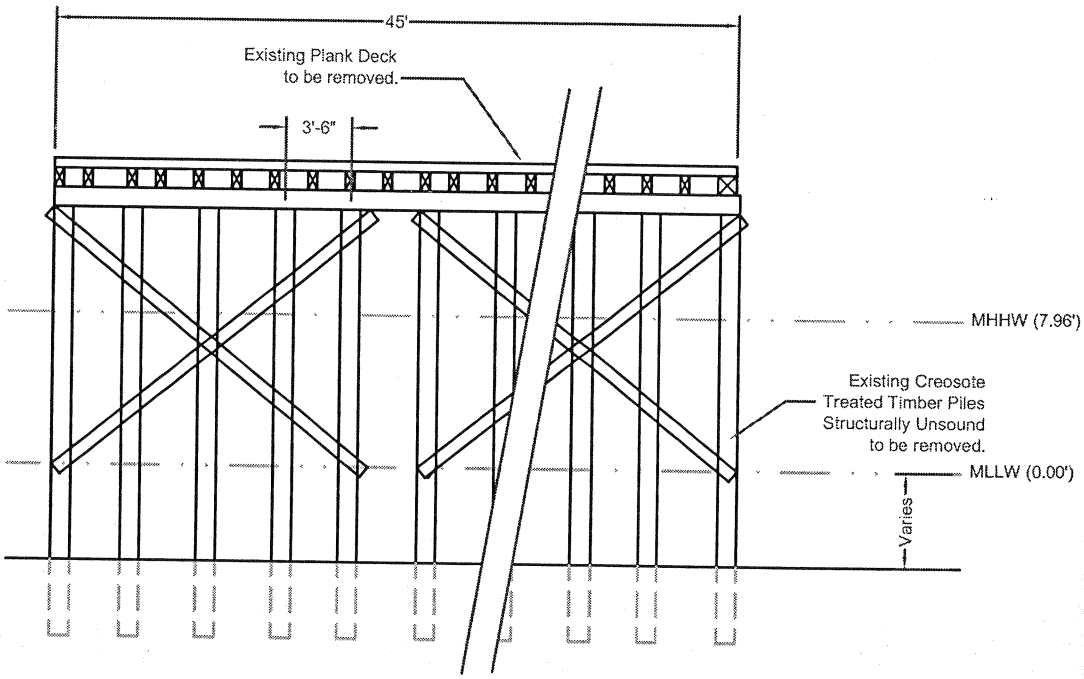

North End of Dock Damage

Scale: 1"=10'

Date: March 2009
Sheet 10 of 15

PURPOSE: Replace Existing Deck & Substructure.
DATUM: NGVD 1991
ADJACENT PROPERTY OWNERS:
1. Washington DNR
2. Makah Indian Nation

APPLICANT: High Tide Seafoods
REFERENCE: NWS-2006-1348-SO
LOCATION: 851 Bayview Ave.

PROPOSED: Dock Repair & Maintenance
IN: Neah Bay
COUNTY: Clallam
STATE: WA

LATITUDE: 48°22'5.4"N
LONGITUDE: 124°37'4.2"W
SECTION: 10
TOWNSHIP: 33N
RANGE: 15W

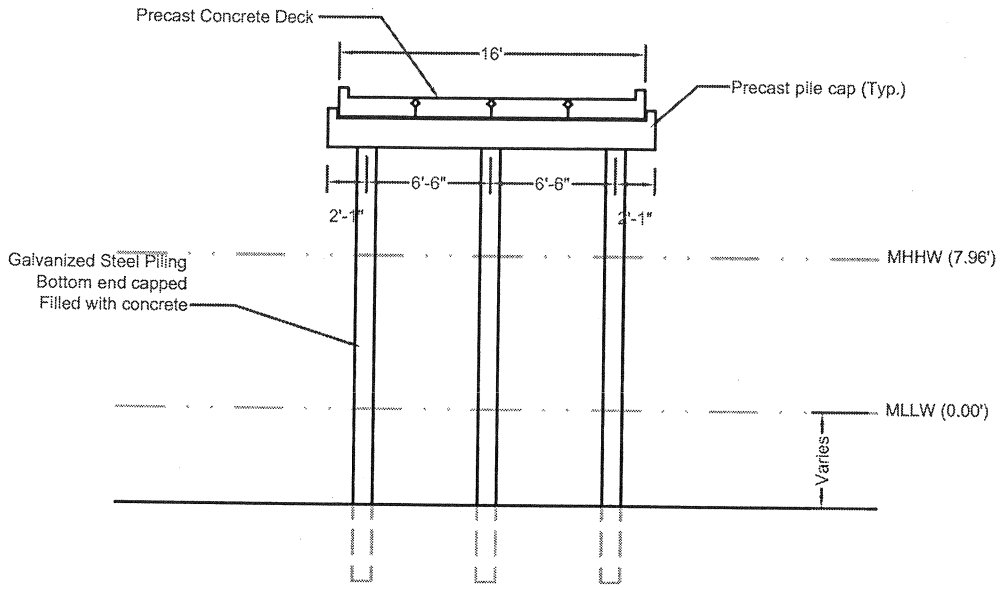

New Bents 1-25

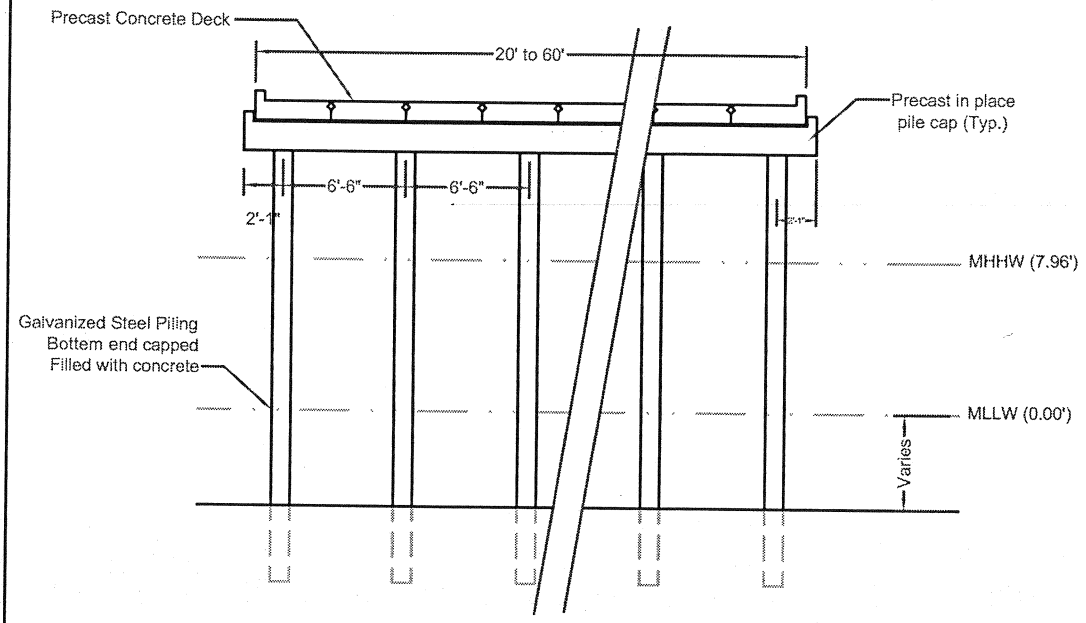

New Bents 26-30

Scale: 1"=10'

Date: March 2009
Sheet 11 of 15

PURPOSE: Replace Existing Deck & Substructure.
DATUM: NGVD 1991
ADJACENT PROPERTY OWNERS:
1. Washington DNR
2. Makah Indian Nation

APPLICANT: High Tide Seafoods
REFERENCE: NWS-2006-1348-SO
LOCATION: 851 Bayview Ave.

PROPOSED: Pier Replacement Project
IN: Neah Bay
COUNTY: Clallam
STATE: WA

LATITUDE: 48°22'5.4"N
LONGITUDE: 124°37'4.2"W
SECTION: 10
TOWNSHIP: 33N
RANGE: 15W

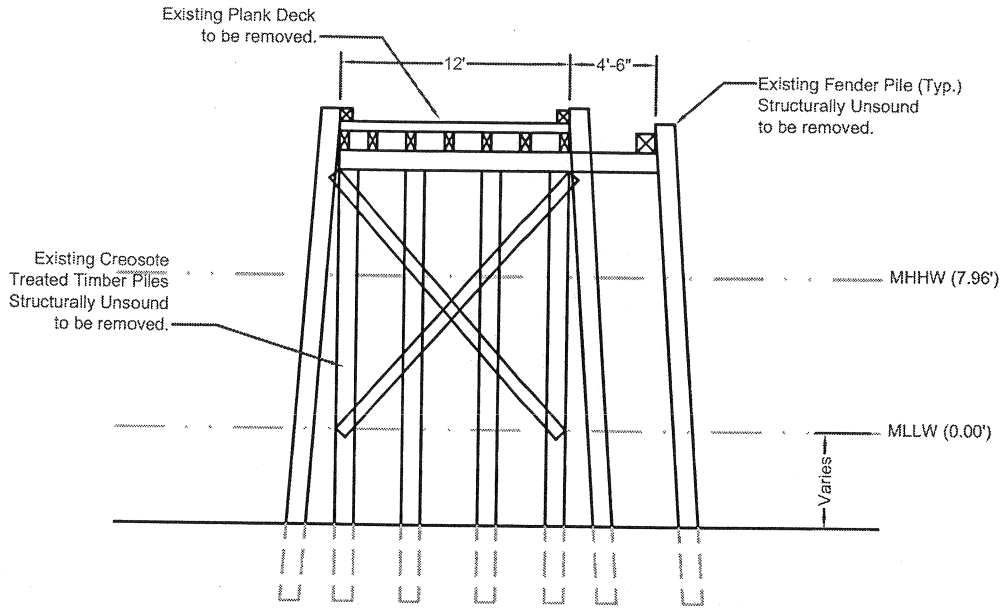

Existing Bents 1-35

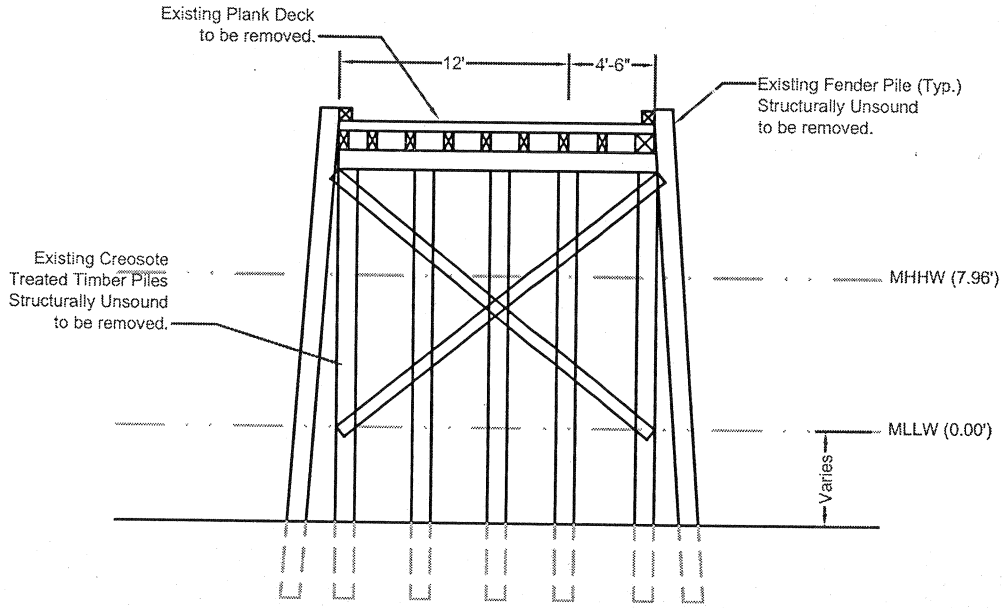

Existing Bents 36-46

Scale: 1"=10'

Date: March 2009
Sheet 12 of 15

PURPOSE: Replace Existing Deck & Substructure.
DATUM: NGVD 1991
ADJACENT PROPERTY OWNERS:
1. Washington DNR
2. Makah Indian Nation

APPLICANT: High Tide Seafoods
REFERENCE: NWS-2006-1348-SO
LOCATION: 851 Bayview Ave.

PROPOSED: Pier Replacement Project
IN: Neah Bay
COUNTY: Clallam
STATE: WA

LATITUDE: 48°22'5.4"N
LONGITUDE: 124°37'4.2"W
SECTION: 10
TOWNSHIP: 33N
RANGE: 15W

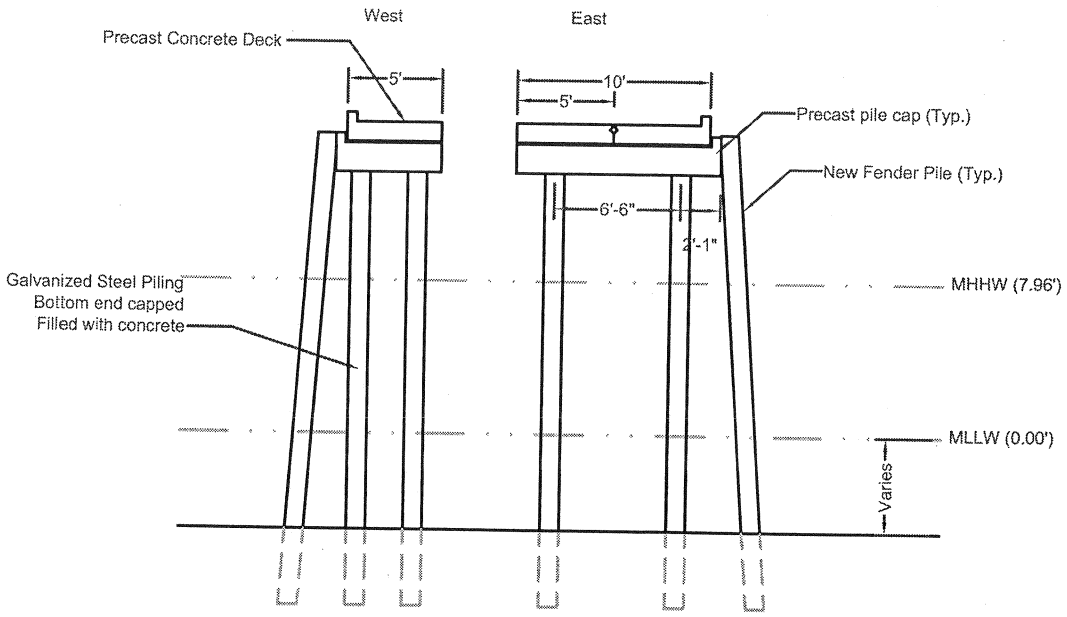

New Perimeter Dock

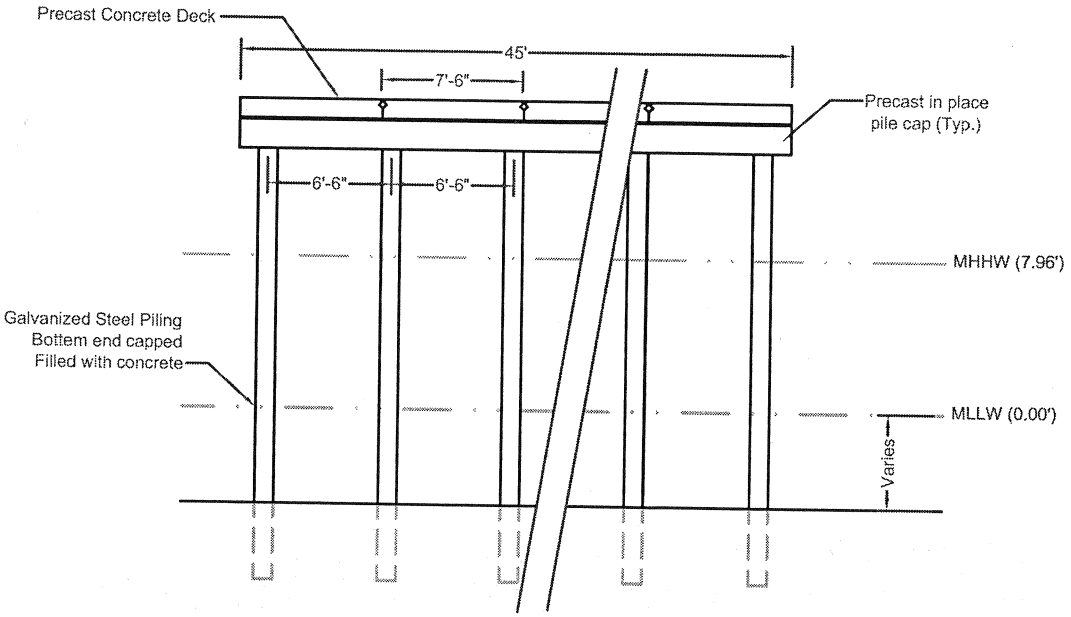

New North End of Dock

Scale: 1"=10'

Date: March 2009
Sheet 13 of 15

PURPOSE: Replace Existing Deck & Substructure.
DATUM: NGVD 1991
ADJACENT PROPERTY OWNERS:
1. Washington DNR
2. Makah Indian Nation

APPLICANT: High Tide Seafoods
REFERENCE: NWS-2006-1348-SO
LOCATION: 851 Bayview Ave.

PROPOSED: Dock Repair & Maintenance
IN: Neah Bay
COUNTY: Clallam
STATE: WA

LATITUDE: 48°22'5.4"N
LONGITUDE: 124°37'4.2"W
SECTION: 10
TOWNSHIP: 33N
RANGE: 15W

PURPOSE: Replace Existing Deck & Substructure.
DATUM: NGVD 1991
ADJACENT PROPERTY OWNERS:
1. Washington DNR
2. Makah Indian Nation

APPLICANT: High Tide Seafoods
REFERENCE: 200501007
LOCATION: 851 Bayview Ave.

PROPOSED: Dock Maintenance & Repair
IN: Neah Bay
COUNTY: Clallam
STATE: WA

LATITUDE: 48°22'5.4"N
LONGITUDE: 124°37'4.2"W
SECTION: 10
TOWNSHIP: 33N
RANGE: 15W

Date: March 2009
Sheet 14 of 15

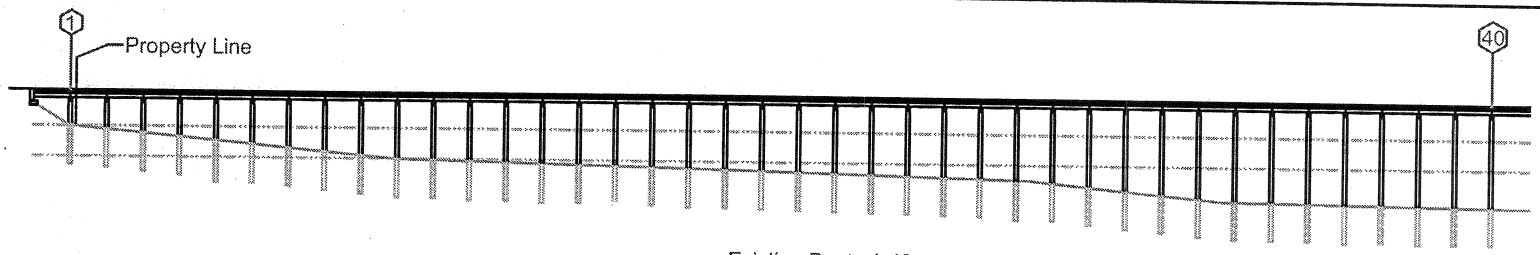

Existing Bents 1-40
Scale: 1"=50'

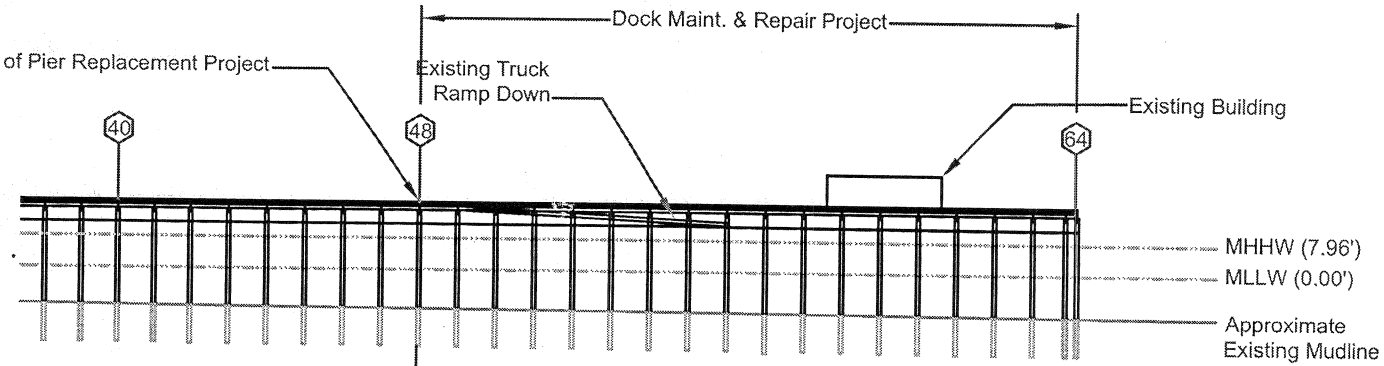

Existing Bents 38-64
Scale: 1"=50'

31 unsound Fender Piling
to be removed
85 unsound Creosote piling
to be removed this project.

31 Fender Piling
installed in this project.
40 Galv. Steel closed bottom
Conc. filled dock repl. piles.

Date: March 2009
Sheet 15 of 15

PURPOSE: Replace Existing Deck & Substructure.
DATUM: NGVD 1991
ADJACENT PROPERTY OWNERS:
1. Washington DNR
2. Makah Indian Nation

APPLICANT: High Tide Seafoods
REFERENCE: 200501007
LOCATION: 851 Bayview Ave.

PROPOSED: Dock Maintenance & Repair
IN: Neah Bay
COUNTY: Clallam
STATE: WA

LATITUDE: 48°22'5.4"N
LONGITUDE: 124°37'4.2"W
SECTION: 10
TOWNSHIP: 33N
RANGE: 15W