US Army Corps of Engineers
Seattle District

WASHINGTON STATE DEPARTMENT OF ECOLOGY

Joint Public Notice

Application for a Department of the Army Permit and a Washington Department of Ecology Water Quality Certification and/or Coastal Zone Management Consistency Concurrence

US Army Corps of Engineers
Regulatory Branch
Post Office Box 3755
Seattle, WA 98124-3755
Telephone (206) 766-6665
Attn: Jerald Gregory, Project Manager

WA Department of Ecology
SEA Program
300 Desmond Drive Southeast
Olympia, WA 98503-7600
Telephone (360) 407-6068
Attn: SEA Program, Federal Permit Coordinator

Public Notice Date: February 18, 2009
Expiration Date: March 19, 2009

Reference No.: NWS-2009-00026
Name: Bender, Nathaniel & Paul Vander Hoek

Interested parties are hereby notified that the U.S. Army Corps of Engineers (Corps) and the Washington Department of Ecology (Ecology) have received an application to perform work in waters of the United States as described below and shown on the enclosed drawings.

The Corps will review the work in accordance with Section 404 of the Clean Water Act (CWA) and Section 10 of the Rivers and Harbors Act. Ecology will review the work pursuant to Section 401 of the CWA, with applicable provisions of State water pollution control laws.

APPLICANT: Mr. Nathaniel Bender
2220 Wapato Way
Chelan, Washington 98816
Telephone: (509) 687-3080

Mr. Paul Vander Hoek
2810 131st Place N.E.
Bellevue, Washington 98005

AGENT: Grette Associates
151 South Worthen Street, Suite 101
Wenatchee, Washington 98801
ATTN: Mr. Larry Lehman
Telephone: (509) 663-6300

LOCATION: In Lake Chelan, near Chelan, Chelan County, Washington.

WORK: Construct a 4-foot by 110-foot pier; excavate and place up to 10 cubic yards for piling footings; and install two ground-based boat lifts.

PURPOSE: Joint-use recreational access to Lake Chelan.

ADDITIONAL INFORMATION – Copies of this public notice which have been mailed or otherwise physically distributed, feature project drawings in black and white. The electronic version features those drawings in color, which we think more accurately communicates the scope of project impacts. To access the electronic version of this public notice, go to the Seattle District's web page at http://www.nws.usace.army.mil/ and scroll down the alphabetical listing of District elements, and click on "Regulatory" and then "Regulatory – Permits" for the Seattle District's Regulatory homepage. Select the prominently displayed "Public Notices" heading and a list of recently-issued public notices will appear, in chronological order of the date of issuance. Select and view the listing for this project.

MITIGATION: As part of the original application, the applicant submitted a large woody debris plan consisting of three large woody debris structures to offset impacts to the aquatic environment. These structures will provide approximately 576 square feet of habitat.

ENDANGERED SPECIES: The Endangered Species Act (ESA) requires federal agencies to consult with the U.S. Fish and Wildlife Service (USFWS) pursuant to Section 7 of ESA on all actions that may affect a species listed (or proposed for listing) under the ESA as threatened or endangered or any designated critical habitat. After receipt of comments from this public notice, the U.S. Army Corps of Engineers will evaluate the potential impacts to proposed and/or listed species and their designated critical habitat.

CULTURAL RESOURCES: The District Engineer has reviewed the latest published version of the National Register of Historic Places, lists of properties determined eligible and other sources of information. Due to the project area's position in the landscape (i.e. adjacent to a river), there is the potential for unknown historic properties to occur in the project area. An historic properties investigation will be required during the permit review. The District Engineer invites responses to this public notice from Native American Nations or tribal governments; Federal, State, and local agencies; historical and archeological societies; and other parties likely to have knowledge of or concerns with historic properties in the area. This public notice initiates consultation under Section 106 of the National Historic Preservation Act with any Tribe that has information or concerns with historic properties in the proposed permit area.

PUBLIC HEARING: Any person may request, in writing, within the comment period specified in this notice, that a public hearing be held to consider this application. Requests for public hearings shall state, with particularity, the reasons for holding a public hearing.

EVALUATION – CORPS - The decision whether to issue a permit will be based on an evaluation of the probable impacts, including cumulative impacts, of the proposed activity on the public interest. That decision will reflect the national concern for both protection and utilization of important resources. The benefits, which reasonably may be expected to accrue from the proposal, must be balanced against its reasonably foreseeable detriments. All factors which may be relevant to the proposal will be considered, including the cumulative effects thereof; among those are conservation, economics, aesthetics, general environmental concerns, wetlands, historic properties, fish and wildlife values, flood hazards, floodplain values, land use, navigation, shoreline erosion and accretion, recreation, water supply and conservation, water quality, energy needs, safety, food and fiber production, mineral needs, considerations of property ownership, and, in general, the needs and welfare of the people.

The Corps is soliciting comments from the public; Native American Nations or tribal governments; Federal, State, and local agencies and officials; and other interested parties in order to consider and evaluate the impacts of this activity. Any comments received will be considered by the Corps to determine whether to issue, modify, condition or deny a permit for the work. To make this decision, comments are used to assess impacts on endangered species, historic properties, water quality, general environmental effects, and the other public interest factors listed above. Comments are used in the preparation of an Environmental Assessment and/or an Environmental Impact Statement pursuant to the National Environmental Policy Act. Comments are also used to determine the need for a public hearing and to determine the overall public interest of the activity.

The described discharge will be evaluated for compliance with guidelines promulgated by the Environmental Protection Agency under authority of Section 404(b)(1) of the CWA. These guidelines require an alternatives analysis for any proposed discharge of dredged or fill material into waters of the United States.

EVALUATION—ECOLOGY: Ecology is soliciting comments from the public; Federal, Native American Nations or tribal governments, State, and local agencies and officials; and other interested parties in order to consider and evaluate the impacts of this activity. Ecology will be considering all comments to determine whether to certify or deny certification for the proposed project.

ADDITIONAL EVALUATION: This proposal is the subject of Shorelines Substantial Development Permit being processed by Chelan County.

COMMENT AND REVIEW PERIOD: Conventional mail or e-mail comments on this public notice will be accepted and made part of the record and will be considered in determining whether it would be in the public interest to authorize this proposal. In order to be accepted, e-mail comments must originate from the author's e-mail account and must include on the subject line of the e-mail message the permit applicant's name and reference number as shown below. Either conventional mail or e-mail comments must include the permit applicant's name and reference number, as shown below, and the commentor's name, address, and phone number. All comments whether conventional mail or e-mail must reach this office, no later than the expiration date of this public notice to ensure consideration.

Corps comments: All e-mail comments should be sent to Jerald.J.Gregory@usace.army.mil. Conventional mail comments should be sent to U.S. Army Corps of Engineers, Regulatory Branch, Attn: Mr. Jerald J. Gregory, Post Office Box 3755, Seattle, Washington, 98124-3755.

Ecology Comments: Any person desiring to present views on the project pertaining to a request for water quality certification under Section 401 of the CWA, may do so by submitting written comments to the following address: Department of Ecology, Attn: SEA program – Federal Permit Coordinator, P.O. Box 47600, Olympia, Washington, 98503-7600, or e-mail to ecyfedpermit@ecy.wa.gov

To ensure proper consideration of all comments, responders must include the following name and reference number in the text of their comments: Bender, Nathaniel and Paul Vander Hoek, NWS-2009-00026

Encl: Figures (5)

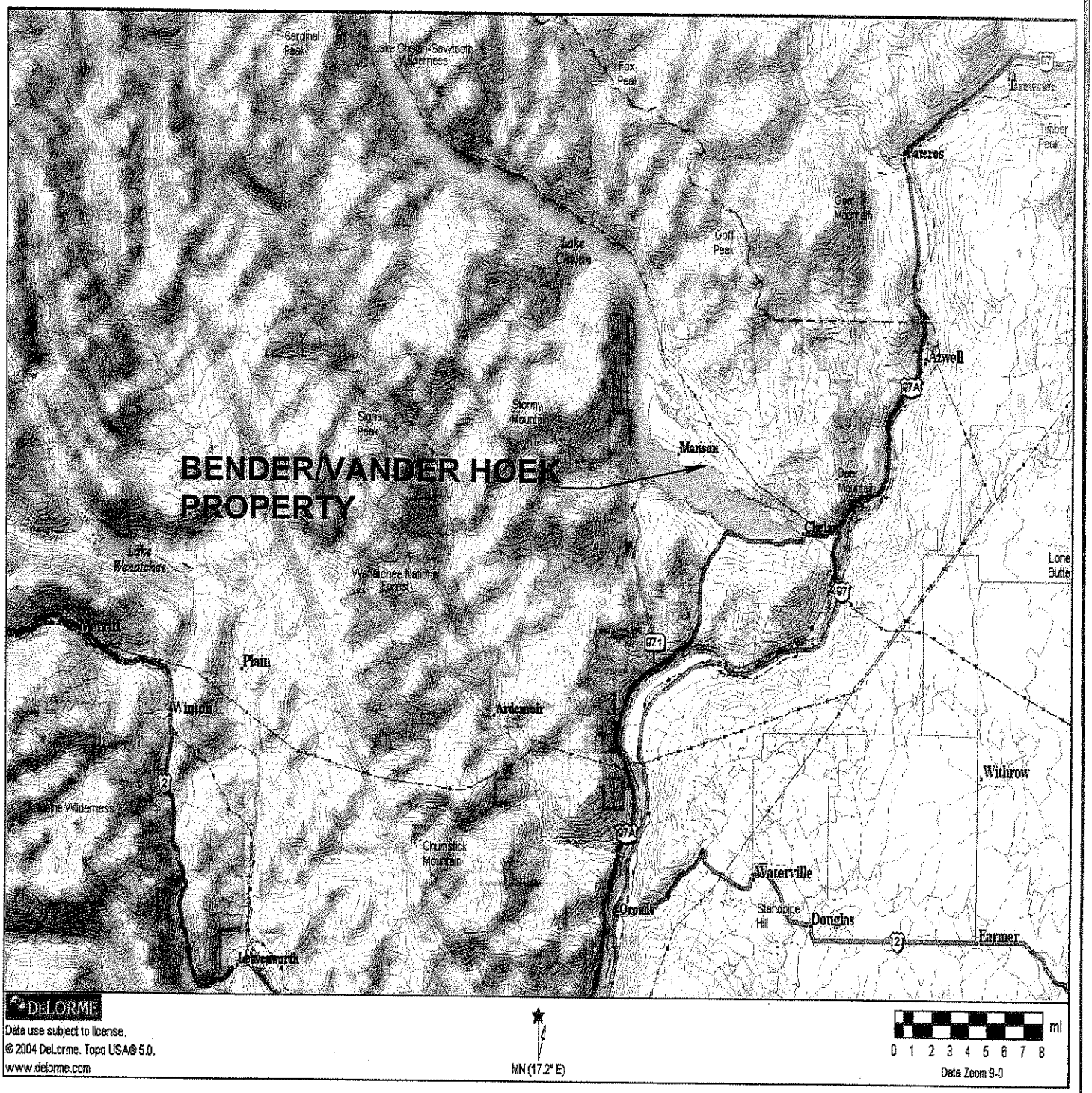

47.8792 N, 120.1244 W

PURPOSE:
INSTALLATION OF JOINT-USE PIER, RELOCATION OF PERMITTED GROUND BASED BOATLIFT AND INSTALLATION OF A NEW GROUND BASED BOATLIFT

ADJACENT PROPERTY OWNERS:

① PATRICK FAHEY (UPRIVER)
205 WALL ST
MANSON, WA. 98831

② THOMAS TOBEY (DOWNRIVER)
2252 SR 150
MANSON, WA. 98831

VICINITY MAP

Grette Associates LLC
ENVIRONMENTAL CONSULTANTS

NWS-2009-00026

BENDER/VANDER HOEK PIER
IN: LAKE CHELAN
2220 WAPATO WAY
MANSON, WA 98831

COUNTY OF: CHELAN
STATE: WA
APPLICATION BY: NATHANIEL BENDER
PAUL VANDER HOEK

rev 2/12/09

SHEET NO. 1 OF 5 DATE: ~~12/15/08~~

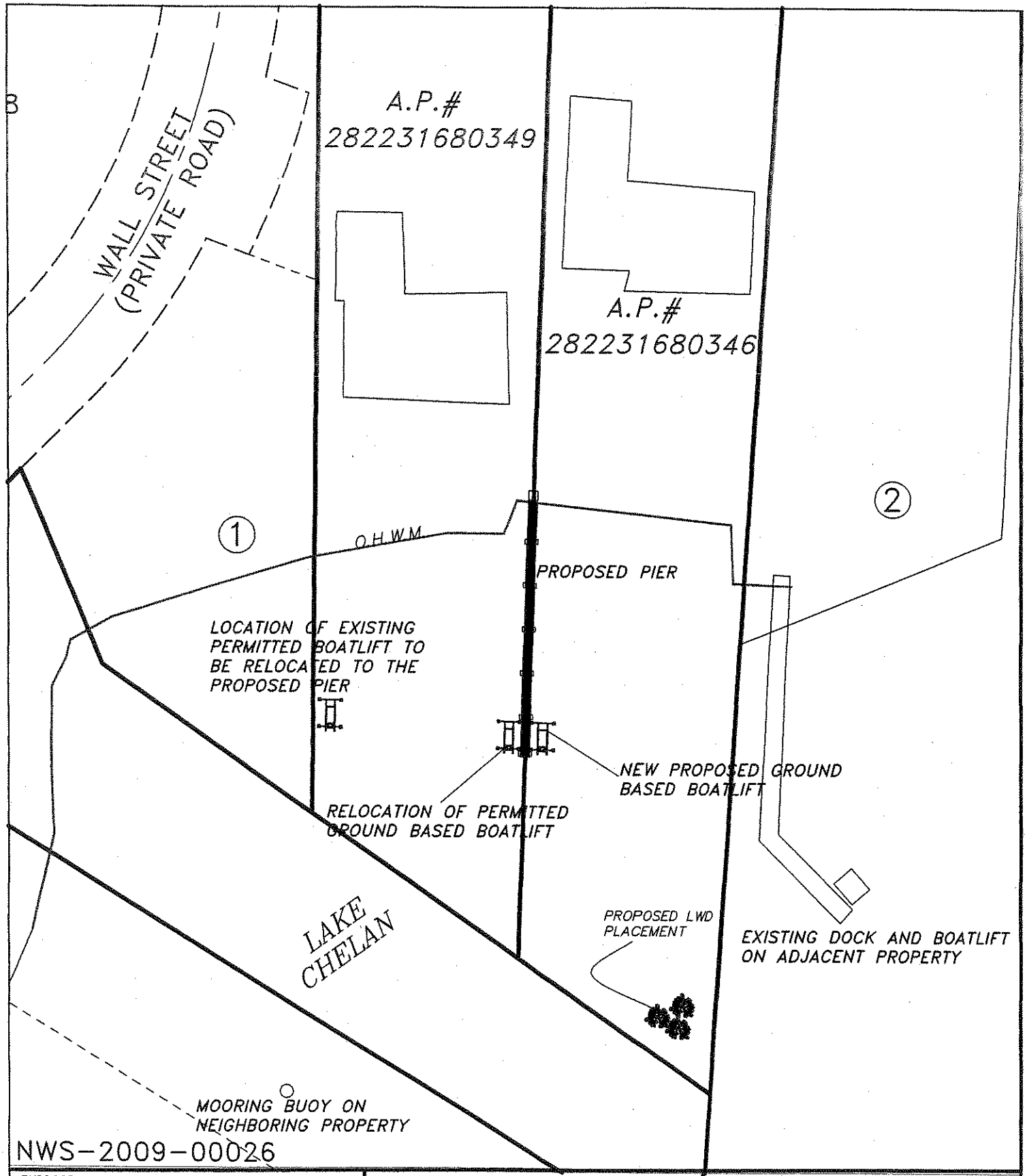

PURPOSE:
INSTALLATION OF JOINT-USE PIER, RELOCATION OF PERMITTED GROUND BASED BOATLIFT AND INSTALLATION OF A NEW GROUND BASED BOATLIFT

ADJACENT PROPERTY OWNERS:

① PATRICK FAHEY (UPRIVER)
205 WALL ST
MANSON, WA. 98831

② THOMAS TOBEY (DOWNRIVER)
2252 SR 150
MANSON, WA. 98831

SITE PLAN

Grette Associates LLC
ENVIRONMENTAL CONSULTANTS

BENDER/VANDER HOEK PIER
IN: LAKE CHELAN
2220 WAPATO WAY
MANSON, WA 98831

COUNTY OF: CHELAN
STATE: WA
APPLICATION BY: NATHANIEL BENDER
PAUL VANDER HOEK

REVISED
02/12/09

SHEET NO. 2 OF 5 DATE: 12/15/08

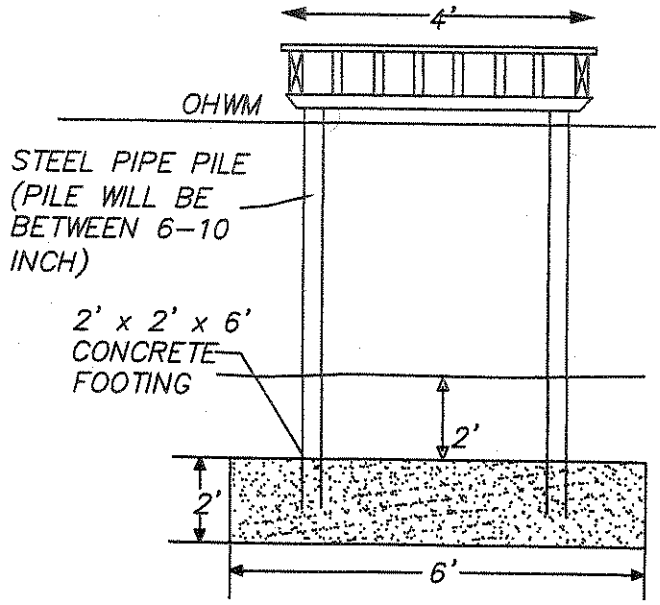

NOT TO SCALE

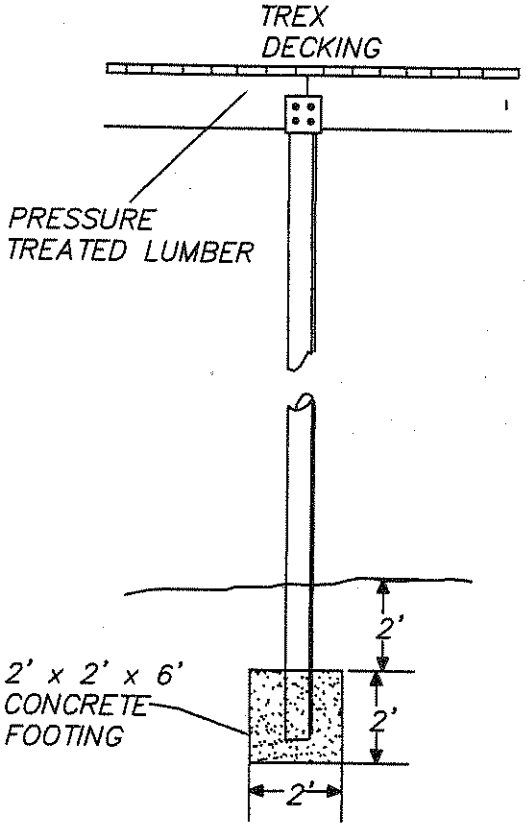

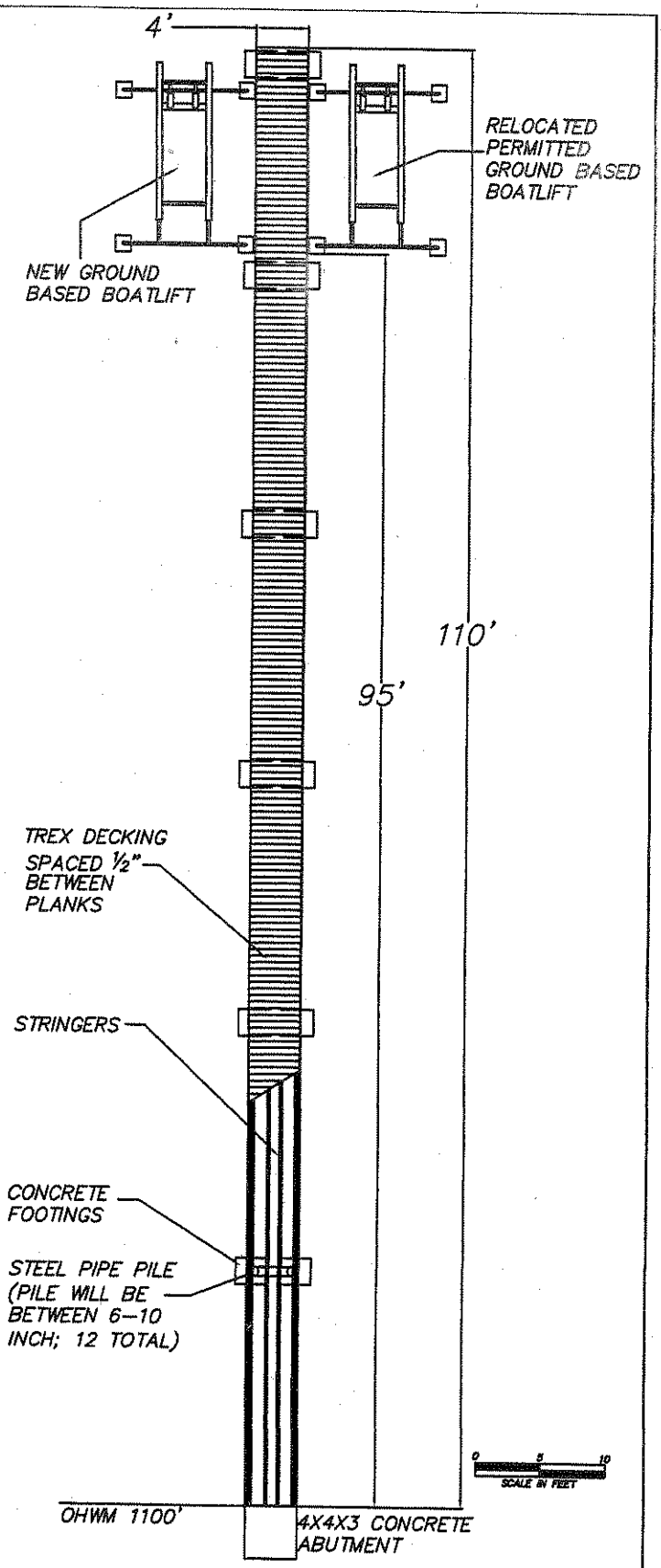

PURPOSE:
INSTALLATION OF JOINT–USE PIER, RELOCATION OF PERMITTED GROUND BASED BOATLIFT AND INSTALLATION OF A NEW GROUND BASED BOATLIFT

ADJACENT PROPERTY OWNERS:

① PATRICK FAHEY (UPRIVER)
205 WALL ST
MANSON, WA. 98831

② THOMAS TOBEY (DOWNRIVER)
2252 SR 150
MANSON, WA. 98831

PIER PLAN

Grette Associates LLC
ENVIRONMENTAL CONSULTANTS

NWS-2009-00026

BENDER/VANDER HOEK PIER
IN: LAKE CHELAN
2220 WAPATO WAY
MANSON, WA 98831

COUNTY OF: CHELAN
STATE: WA
APPLICATION BY: NATHANIEL BENDER
PAUL VANDER HOEK

Rev. 2/12/09

SHEET NO. 3 OF 5 DATE: ~~12/15/08~~

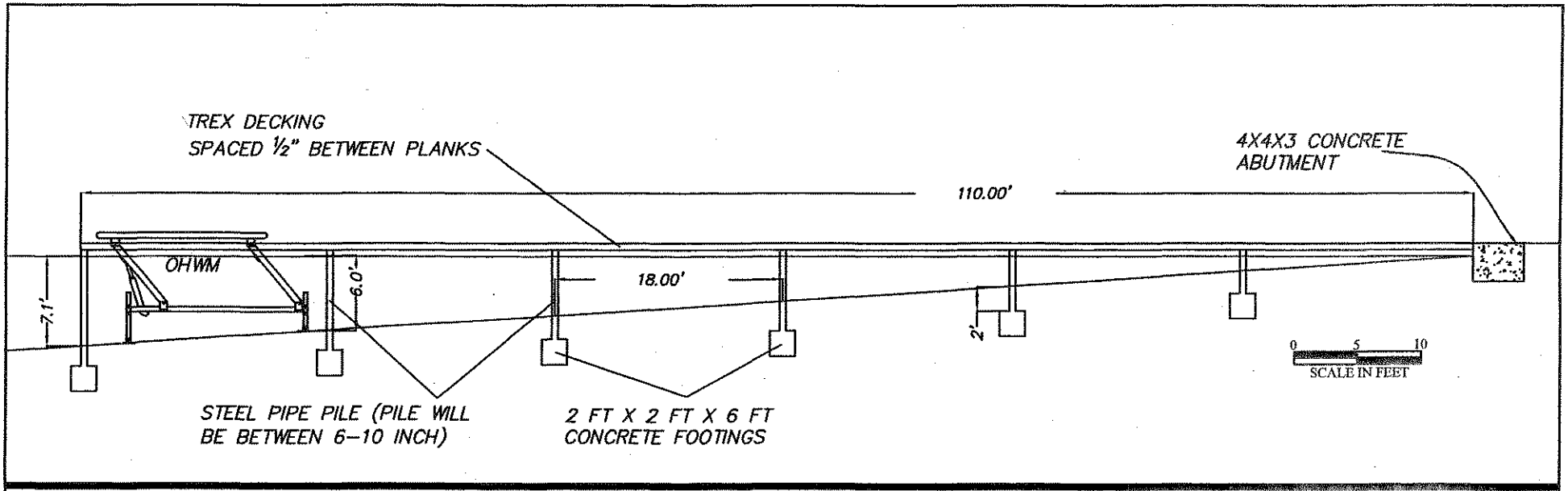

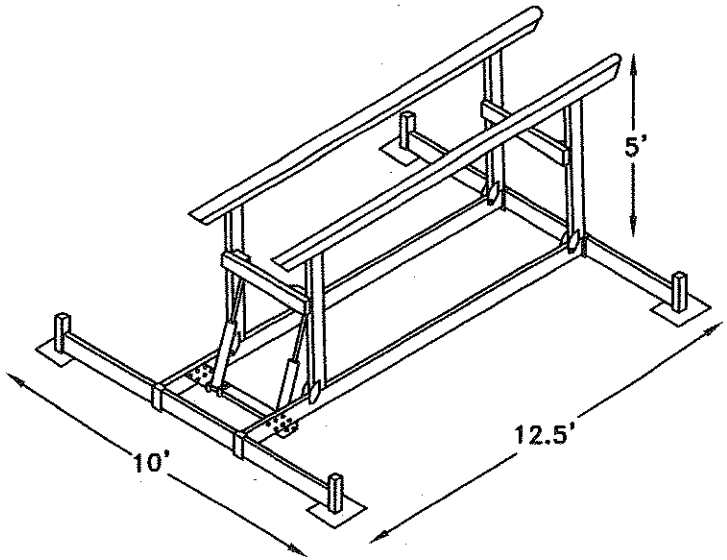

OBLIQUE VIEW

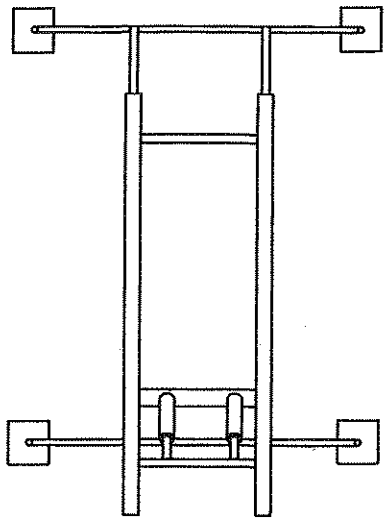

AERIAL VIEW

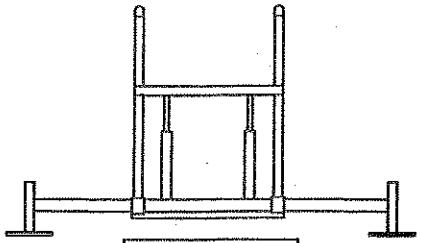

FRONT VIEW

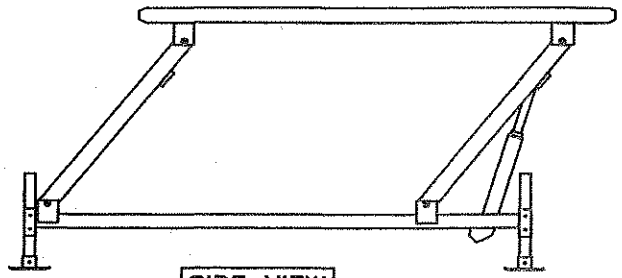

SIDE VIEW

PURPOSE:
INSTALLATION OF JOINT–USE PIER, RELOCATION OF PERMITTED GROUND BASED BOATLIFT AND INSTALLATION OF A NEW GROUND BASED BOATLIFT

ADJACENT PROPERTY OWNERS:

① PATRICK FAHEY (UPRIVER)
205 WALL ST
MANSON, WA. 98831

② THOMAS TOBEY (DOWNRIVER)
2252 SR 150
MANSON, WA. 98831

CROSS SECTION
BOATLIFT DETAIL

Grette Associates LLC
ENVIRONMENTAL CONSULTANTS

NWS-2009-00026

BENDER/VANDER HOEK PIER
IN: LAKE CHELAN
2220 WAPATO WAY
MANSON, WA 98831

COUNTY OF: CHELAN
STATE: WA
APPLICATION BY: NATHANIEL BENDER
PAUL VANDER HOEK

REV. 2/12/09

SHEET NO. 4 OF 5 DATE: ~~12/15/08~~

TYPICAL LWD COVER STRUCTURE

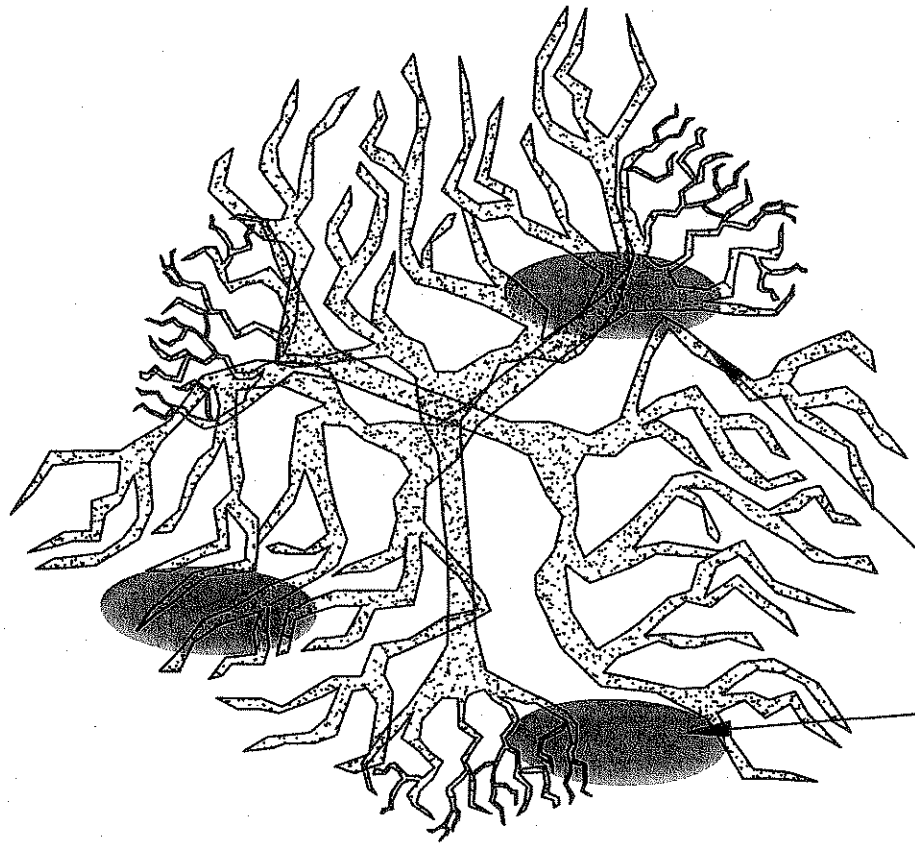

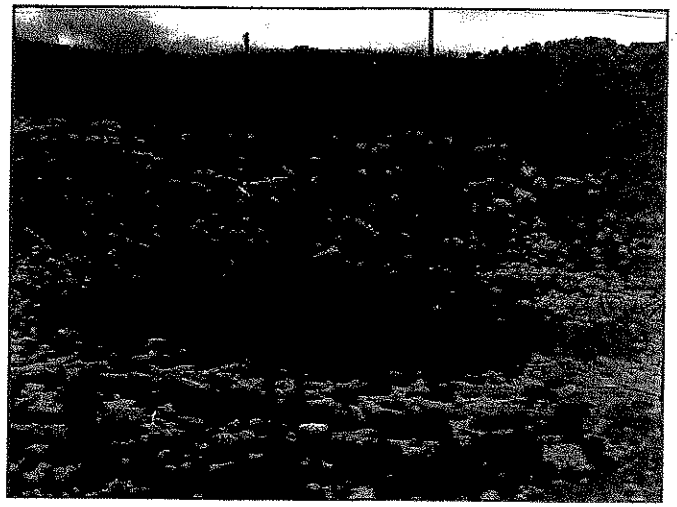

PHOTOGRAPH OF ACTUAL LWD IN LAKE CHELAN

TREES CABLED TOGETHER AND ANCHORED WITH LARGE ROCK OR SCREW ANCHORS

EACH LWD STRUCTURE WILL CONSIST OF 3 WHOLE MATURE FRUIT TREES WITH LIMBS AND ROOTWADS ATTACHED. THIS WILL RESULT IN A TOTAL OF 9 TOTAL TREES INSTALLED

PURPOSE:
INSTALLATION OF JOINT-USE PIER, RELOCATION OF PERMITTED GROUND BASED BOATLIFT AND INSTALLATION OF A NEW GROUND BASED BOATLIFT

ADJACENT PROPERTY OWNERS:

① PATRICK FAHEY (UPRIVER)
205 WALL ST
MANSON, WA. 98831

② THOMAS TOBEY (DOWNRIVER)
2252 SR 150
MANSON, WA. 98831

LWD STRUCTURE

Grette Associates LLC
ENVIRONMENTAL CONSULTANTS

NWS-2009-00026

BENDER/VANDER HOEK PIER
IN: LAKE CHELAN
2220 WAPATO WAY
MANSON, WA 98831

COUNTY OF: CHELAN
STATE: WA
APPLICATION BY: NATHANIEL BENDER
PAUL VANDER HOEK

SHEET NO. 5 OF 5 DATE: ~~10/15/08~~ 2/12/09