DEPARTMENT OF THE ARMY
SEATTLE DISTRICT, CORPS OF ENGINEERS
P.O. BOX 3755
SEATTLE, WASHINGTON 98124-3755

REPLY TO
ATTENTION OF

23 October 2001

Civil/HTRW Unit
Contracting Division

SUBJECT: Request for Proposal DACW67-02-T-0001, Operations and Maintenance of the Existing Treatment Plant, Wyckoff/Eagle Harbor Superfund Site, Bainbridge Island, Washington

To: SCS Engineer, Inc. DACW67-01-D-1007
2405 140th Avenue NE, Suite
Bellevue, WA 98005

Project Performance Corp., DACW67-01-D-1008
7600 ColshireDrive, Suite 500
McLean, VA 22102-7600

Garry Struthers Associates, Inc. DACW67-01-D-1009
3150 Richards Road, Suite 100
Bellevue, WA 98005

Gentlemen:

Reference is made to Long-Term Monitoring/Long-Term Operations Multiple Award Remediation Contracts (LTM/LTO MARC) Numbers DACW67-01-D-1007, DACW67-01-D-1008, and DACW67-01-D-1009.

Enclosed is one copy of the Request for Proposal (RFP) for DACW67-02-T-0001 entitled "Operations and Maintenance of the Existing Treatment Plant, Wyckoff/Eagle Harbor Superfund Site, Bainbridge Island, Washington". The enclosure via EBS consists of the following: a) DD1155 and b) technical specifications.

This project is subject to the Service Contract Act; the current Wage Determination is attached to this solicitation. It is your responsibility to distribute copies of the solicitation to Plan Centers and Subcontractors. All requests for plans and specifications received in this office will be referred to you.

Your proposal will be due to the Seattle District, Attn: Sharon Gonzalez, no later than 2:00 p.m. local time on 5 November 2001. Proposals may be mailed to P.O. Box 3755, Seattle, WA 98124-3755 or hand carried to 4735 East Marginal Way South, Seattle, WA 98134-2385. Any proposal received after the above date and time will be processed in accordance with Late Proposals and Revisions contained in Federal Acquisition Regulation 15.209..

Award will be made to the responsive, responsible offeror submitting the lowest priced offer. The contents of your proposal should include the following:

a. DD1155, (Original). Complete Block 9; Contractor Name and Address and Block 12 Discount Terms (optional). Sign and date Block 16.

b. A statement that your proposal is good for a period of 90 calendar days from the date of submittal of your proposal.

Any questions regarding the technical aspects of this project should be addressed to Kathy LaProwse at telephone (206)764-3505. Administrative questions should be addressed to the undersigned (206) 764-6696.

Sincerely,

Sharon Gonzalez
Senior Contract Specialist

Enclosure
as

ORDER FOR SUPPLIES OR SERVICES
(Contractor must submit four copies of invoice.)

Form Approved
OMB No. 0704-0187
Expires Dec 31, 1993

PAGE 1 OF

Public reporting burden for this collection of information is estimated to average 1 hour per response, including the time for reviewing instructions, searching existing data sources, gathering and maintaining the data needed, and completing and reviewing the collection of information. Send comments regarding this burden estimate or any other aspect of this collection of information, including suggestions for reducing this burden, to Department of Defense, Washington Headquarters Services, Directorate for Information Operations and Reports, 1215 Jefferson Davis Highway, Suite 1204, Arlington, VA 22202-4302, and to the Office of Management and Budget, Paperwork Reduction Project (0704-0187), Washington, DC 20503.

PLEASE DO NOT RETURN YOUR FORM TO EITHER OF THESE ADDRESSES.
SEND YOUR COMPLETED FORM TO THE PROCUREMENT OFFICIAL IDENTIFIED IN ITEM 6.

1. CONTRACT/PURCH ORDER NO.	2. DELIVERY ORDER NO.	3. DATE OF ORDER (YYMMMDD)	4. REQUISITION/PURCH REQUEST NO.	5. PRIORITY
	DACW67-02-T-0001	01/10/23	W68MD9-1285-5370	

6. ISSUED BY CODE
US Army Corps of Engineers, Seattle District
CENWS-CT-CB-CU (S. Gonzalez)
PO Box 3755
Seattle, WA 98124-3755

7. ADMINISTERED BY *(If other than 6)* CODE
Same as Block #6

8. DELIVERY FOB
[X] DEST
[ ] OTHER
(See Schedule if other)

9. CONTRACTOR CODE
FACILITY CODE
NAME AND ADDRESS

10. DELIVER TO FOB POINT BY *(Date) (YYMMDD)*

11. MARK IF BUSINESS IS
[ ] SMALL
[ ] SMALL DISADVANTAGED
[ ] WOMEN-OWNED

12. DISCOUNT TERMS

13. MAIL INVOICES TO
See Block #15

14. SHIP TO CODE
See Schedule

15. PAYMENT WILL BE MADE BY CODE
US Army Corps of Engineers Finance Center
CEFC-AO-P (901)874-8556
5722 Integrity Drive
Millington, TN 38054-5005

MARK ALL PACKAGES AND PAPERS WITH CONTRACT OR ORDER NUMBER

16. TYPE OF ORDER
DELIVERY [ ] This delivery order is issued on another Government agency or in accordance with and subject to terms and conditions of above numbered contract.
PURCHASE [ ] Reference your furnish the following on terms specified herein.
ACCEPTANCE. THE CONTRACTOR HEREBY ACCEPTS THE OFFER REPRESENTED BY THE NUMBERED PURCHASE ORDER AS IT MAY PREVIOUSLY HAVE BEEN OR IS NOW MODIFIED, SUBJECT TO ALL OF THE TERMS AND CONDITIONS SET FORTH, AND AGREES TO PERFORM THE SAME.

NAME OF CONTRACTOR | SIGNATURE | TYPED NAME AND TITLE | DATE SIGNED *(YYMMDD)*

[ ] If this box is marked, supplier must sign Acceptance and return the following number of copies:

17. ACCOUNTING AND APPROPRIATION DATE/LOCAL USE

18. ITEM NO.	19. SCHEDULE OF SUPPLIES/SERVICE	20. QUANTITY ORDERED/ ACCEPTED*	21. UNIT	22. UNIT PRICE	23. AMOUNT
0001	Request for Proposal DACW67-02-T-0002 to provide all labor, services, equipment, and materials required to perform the work as defined in the attached Technical Specifications for Operation and Maintenance of the Existing Treatment Plant, Wyckoff/Eagle Harbor, Bainbridge Island, Washington. Sharon Gonzalez, (206)764-6696				

** If quantity accepted by the Government is same as quantity ordered, indicate by X. If different, enter actual quantity accepted below quantity ordered and encircle.*

24. UNITED STATES OF AMERICA
BY: CONTRACTING/ORDERING OFFICER

25. TOTAL
29. DIFFERENCES

26. QUANTITY IN COLUMN 20 HAS BEEN
[ ] INSPECTED [ ] RECEIVED [ ] ACCEPTED, AND CONFORMS TO THE CONTRACT EXCEPT AS NOTED
DATE | SIGNATURE OF AUTHORIZED GOVERNMENT REPRESENTATIVE

27. SHIP. NO.
[ ] PARTIAL
[ ] FINAL

28. D.O. VOUCHER NO.

30. INITIALS

32. PAID BY

33. AMOUNT VERIFIED CORRECT FOR

31. PAYMENT
[ ] COMPLETE
[ ] PARTIAL
[ ] FINAL

34. CHECK NUMBER

35. BILL OF LADING NO.

36. I certify this account is correct and proper for payment.
DATE | SIGNATURE AND TITLE OF CERTIFYING OFFICER

37. RECEIVED AT	38. RECEIVED BY *(Print)*	39. DATE RECEIVED *(YYMMMDD)*	40. TOTAL CONTAINERS	41. S/R ACCOUNT NUMBER	42. S/R VOUCHER NO.

This page intentionally blank

SECTION B

SUPPLIES OR SERVICES AND PRICES/COSTS

Item No.	Description of Item	Quantity	Unit	Unit Price	Amount
BASE ITEMS					
0001	Transition Activities, Including all Pre-Mobilization Submittals except Item 0003AA	1	Job	LS	$_____
0002	Treatment Plant Operations and Maintenance				NSP
0002AA	Operations and General Maintenance	6	MONTH	$_____	$_____
0002AB	Preventative Maintenance Program	6	MONTH	$_____	$_____
0003	Contract Data [4/]				
0003AA	Management Plan	1	Job	LS	$5,000
0003AB	All Data During O&M Services Except for 0003AC				NSP 1/
0003AC	Final Field Report	1	Job	LS	$10,000
	FIXED PRICE WORK - TOTAL PRICE FOR BASE ITEMS (LINE ITEMS 0001 THROUGH 0003AC)				$_____
OPTIONAL ITEMS					
0004	Treatment Plant Operations and Maintenance – Additional Monthly Periods				NSP
0004AA	Operations and General Maintenance-First additional month	1	MONTH	$_____	$_____
0004AB	Preventative Maintenance Program-First additional month	1	MONTH	$_____	$_____
0004AC	Operations and General Maintenance - each additional month beyond first additional month	5*	MONTH	$_____	$_____
0004AD	Preventative Maintenance Program- each additional month beyond first additional month	5*	MONTH	$_____	$_____

This page intentionally blank

SECTION B

SUPPLIES OR SERVICES AND PRICES/COSTS

Item No.	Description of Item	Quantity	Unit	Unit Price	Amount
OPTIONAL ITEMS					
0005	All Work for Granular Activated Carbon Change-out and Replacement with Carbon as Specified				
0005AA	First 3 GAC Change-outs	3	EA	$_____	$_____
0005AB	All Over 3 GAC Change-outs	3	EA	$_____	$_____
0006	All Work for Granular Activated Carbon Change-out as F032/F034 Listed Waste and Replacement with Carbon as Specified				
0006AA	First 3 GAC Change-outs	3	EA	$_____	$_____
0006AB	All Over 3 GAC Change-outs	3	EA	$_____	$_____
0007	14 Calendar Day Changeover Transition Period to Follow-on Contractor. Applies at end of final Contract Period.	1	JOB	LS	$_____
0008	Hazardous Waste Disposal (Incineration)				NSP 1/
0008AA	Non-NAPL – First 10,000 pounds	10,000	LB	$_____	$_____
0008AB	Non-NAPL – Over 10,000 pounds	70,000	LB	$_____	$_____
0008AC	Non-Aqueous Phase Liquid (NAPL) – First 10,000 gallons	10,000	GAL	$_____	$_____
0008AD	Non-Aqueous Phase Liquid– Over 10,000 gallons	30,000	GAL	$_____	$_____
	FIXED PRICE WORK – TOTAL PRICE FOR OPTIONAL ITEMS (LINE ITEMS 0004 THROUGH 0008AD)				$_____
	FIXED PRICE WORK – TOTAL PRICE FOR BASE AND OPTIONAL LINE ITEMS 0001 THROUGH 0008AD				$_____

This page intentionally blank

SECTION B

SUPPLIES OR SERVICES AND PRICES/COSTS

Item No.	Description of Item	Quantity	Unit	Unit Price	Amount
0009	INDEFINITE QUANTITY WORK – LABOR (SERVICE WAGES)				NSP
0009AA	Trouble/Service Call (Plant Operator time -See H2.5 for limits)	100*	HR	$_____	$_____
0009AB	Electrician	100*	HR	$_____	$_____
0009AC	Plumbing /Pipefitting	100*	HR	$_____	$_____
0009AD	Machinery Maintenance Mechanic	100*	HR	$_____	$_____
0009AE	Welder, Combination, Maintenance	100*	HR	$_____	$_____
0009AF	Painter	100*	HR	$_____	$_____
0009AG	Laborer	100*	HR	$_____	$_____
0009AH	Miscellaneous Labor	1	--	NTE	$25,000
0010	INDEFINITE QUANTITY WORK – MATERIALS ALLOWANCE AND SPARE PARTS	1	--	NTE	$25,000
	TOTAL PRICE FOR INDEFINITE QUANTITY WORK LINE ITEMS 0009 AND 0010				$_____
	TOTAL PRICE FOR ALL CONTRACT LINE ITEMS 0001 THROUGH 0010				$_____

Notes:

1. NSP - not separately priced
2. NTE - not to exceed
3. * - estimated quantity. No cost variation for actual quantities will be allowed within the total quantity shown on the schedule
4. The dollar amounts established in Items 0003AA and 0003AC shall not be revised by bidders.

This page intentionally blank

SECTION C

DESCRIPTIONS/SPECIFICATIONS/WORK STATEMENT

C.1 DESCRIPTION OF WORK

The Contractor is to operate and maintain an existing water treatment plant further described under Section 01100 SUMMARY OF WORK. All work shall be in accordance with the specifications, requirements and operations as generally described in this contract.

C.2 TECHNICAL SPECIFICATIONS

Technical specifications including Technical Exhibits accompanying this section and made a part thereof are listed under and bound to Section J LIST OF ATTACHMENTS. (Attachment J4 Technical Specifications).

C.3 DEFINITIONS

C.3.1 Directed, Required, Ordered, Designated, Prescribed

Wherever in the specifications or upon the drawings the words "directed," "required," "ordered," "designated," "prescribed," or words of like import are used, it shall be understood that the "direction," "requirement," "order," "designation," or "prescription" of the Contracting Officer is intended and similarly the words "approved," "acceptable," "satisfactory," or words of like import shall mean "approved by," or "acceptable to," or "satisfactory to" the Contracting Officer unless otherwise expressly stated.

C.3.2 As Shown, As Indicated, As Detailed

Where "as shown," "as indicated," "as detailed," or words of similar import are used, it shall be understood that the reference is made to the drawings accompanying this contract unless stated otherwise. The word "provided" as used herein shall be understood to mean "provided complete in-place," that is "furnished and installed." (FAR 52.236-21 (b and c).)

C.3.3 Contracting Officer (CO), Contracting Officer’s Representative (COR)

Wherever in these specifications or upon the drawings the words "Contracting Officer" (CO) or "Contracting Officer's Representative" (COR), are used, it shall be understood to also mean "Government" unless otherwise expressly stated.

C.3.4 Government Quality Assurance Representative (GQAR)

Wherever in these specifications the word "GQAR" is used, it shall be understood to mean "Government Quality Assurance Representative," unless otherwise stated.

C.3.5 Weekend(s)

Wherever in these specifications the word "weekend(s)" is used, it shall be understood to mean "Saturday, Sunday and Federal Holidays," unless otherwise expressly stated.

C.4 EXTENT OF SERVICES

The detailed requirements for the services listed in the Schedule of Prices are covered under the technical specifications, associated technical exhibits and contract drawings.

C.4.1 Non-Recurring Work

Non-recurring work may be required during the performance of the contract. The Contractor shall provide all resources (except as expressly stated in this contract as furnished by the Government) necessary to provide such work. Non-recurring work will be paid at the appropriate price under the contract line item for such work or, for work not identified in the Schedule of Prices, at the negotiated fixed price under the applicable wage provision.

C.5 DESIGNATION OF CONTRACT MANAGER.

Within five calendar days from the date of award, the Contractor shall notify the Government as to whom it has designated as the Contract Manager for the work to be performed under this contract. The Contract Manager shall serve as the point of contact between the Government and the Contractor and shall have full authority to act on behalf of the Contractor. See specific requirements under Section 01430, CONTRACTOR QUALIFICATIONS and related duties under Section 01830 TREATMENT PLANT OPERATION AND MAINTENANCE.

****

SECTION F

DELIVERIES OR PERFORMANCE

F.1 CONTRACT PERIOD

F.1.1 Services Work – Operation and Maintenance Activities

(a) General: The services required under this Contract will be for a "BASE " period (Item 0002) for the purpose of operation and maintenance of the existing water treatment plant and, if awarded, additional performance under an "OPTION" period (Item 0004) for the purpose of continuing operation and maintenance of the existing water treatment plant and systems. (Refer to Section I clause entitled "Option to Extend Term of Contract"). Notice to proceed may be issued verbally at time of award but will usually be issued by separate correspondence.

(b) Contract Periods: Initial base contract period for O&M services will commence after successful completion of transition period unless sooner terminated under the provisions of the contract. See Sections 01110 SUMMARY OF WORK, and 01120 CONTRACT TRANSITION AND INTERFACE for detailed requirements.

The work includes the following Base and Optional contract periods:

O&M Work Schedule

Item of Work	Contract Period
BASE PERIOD (Phase IIIA)	
(A) CLIN 0002	6-month period
ADDITIONAL OPTIONAL PERIOD	
(B) CLIN 0004	Up to 6 months additional

If the ensuing "OPTIONAL PERIOD," is exercised, the commencement date will be the first calendar date following the last day of the previous contract period and end no later than the specified option period (as identified on the Schedule) after commencement date unless terminated under the provisions of the contract. The total contract period for all O&M services shall not exceed 12 months without a contract modification.

F.1.2 OPTIONAL O&M PERIODS (Applicable only to Optional Items 0004 and 0007)

a. The Government may exercise the Optional Contract Line Item Nos. 0004 and 0007 for additional O& M services, no later than 30 calendar days prior to the end of the base contract period, including any extensions. Notice to proceed on work Item(s) added by exercise of the option(s) will be given upon execution of consent of surety.

b. The parties hereto further agree that any option herein shall be considered to have been exercised at the time the Government deposits written notification to the Contractor in the mails.

F.2 OPTIONAL ITEMS (Applicable only to Optional Items 0005, 0006, and 0008)

a. The Government may exercise any one or more of the Optional Contract Line Items 0005, 0006, and 0008, no later than 35 calendar days prior to the end of any contract period, including any extensions. Notice to proceed on work Item(s) added by exercise of the option(s) will be given upon execution of consent of surety.

b. The parties hereto further agree that any option herein shall be considered to have been exercised at the time the Government deposits written notification to the Contractor in the mails.

c. The time allowed for completion of any one of the specified optional items awarded under this contract will be to the end of the associated contract period but not less than 30 calendar days except for the following items:

1) Items 0005 and 0006 – 14 calendar days for each GAC unit carbon changeout.

F.3 PLACE OF PERFORMANCE

Installation and Services under this contract are required to be performed at the following location: Wyckoff/Eagle Harbor Superfund Site, Bainbridge Island, Washington.

F.4 MEASUREMENT AND PAYMENT

See Section 01270 Measurement and Payment under the technical specifications.

END OF SECTION F

SECTION H

TABLE OF CONTENTS

SPECIAL CONTRACT REQUIREMENTS

SECTION	TITLE
H	SPECIAL CONTRACT REQUIREMENTS - GENERAL
H1	(NOT USED)
H2	SPECIAL CONTRACT REQUIREMENTS - SERVICES

This page intentionally blank

SECTION H

SPECIAL CONTRACT REQUIREMENTS - GENERAL

PARAGRAPH NO.	PARAGRAPH TITLE
H.1	COMMENCEMENT, PROSECUTION, AND COMPLETION OF WORK
H.2	PROVISION ON CONTRACTING OFFICER'S AUTHORITY.
H.3	SUBCONTRACTOR
H.4	SITE CONDITIONS
H.5	INSURANCE - WORK ON A GOVERNMENT INSTALLATION
H.6	IDENTIFICATION OF GOVERNMENT FURNISHED PROPERTY
H.7	APPROVALS BY GOVERNMENT
H.8	CONTRACT DRAWINGS, MAPS, AND SPECIFICATIONS
H.9	EXISTING DRAWINGS AND DETAILS
H.10	DRAWINGS AND OTHER DATA TO BECOME PROPERTY OF GOVERNMENT
H.11	WORK AUTHORIZATION DIRECTIVES
H.12	VARIATIONS IN ESTIMATED QUANTITIES - SUBDIVIDED ITEMS

This page intentionally blank.

SECTION H

SPECIAL CONTRACT REQUIREMENTS - GENERAL

H.1 COMMENCEMENT, PROSECUTION, AND COMPLETION OF WORK

See Section F DELIVERIES OR PERFORMANCE, under CONTRACT PERIODS for requirements.

H.2 PROVISION ON CONTRACTING OFFICER'S AUTHORITY

No oral statement of any person whomever shall, in any manner or degree, modify or otherwise affect the terms of this contract. The Contracting Officer, or his ·authorized representative is the only person authorized to approve changes in any of the requirements and/or terms of this contract and notwithstanding terms contained elsewhere, the said authority remains solely with the Contracting Officer. In the event the contractor effects a change at the direction of any person other than the Contracting Officer, or his authorized representative, the change will be considered to have been made without authority, and no adjustment will be made in the contract price to cover any increase in costs incurred.

H.3 SUBCONTRACTOR

a. Provisions in Subcontract. The Contractor shall cause appropriate provisions to be inserted in all subcontracts relating to this contract, and insure sufficient fulfillment by subcontractors of all contractual provisions.

b. Relationship Between Subcontractor and Government. Nothing contained in this contract shall be construed as a contractual relationship between any subcontractor and the Government.

H.4 SITE CONDITIONS

(a.) Transportation Facilities. The Contractor shall make its own investigation of the conditions of existing public and private roads and of clearances, restrictions, bridge load limits and other limitations affecting transportation and ingress and egress at the job site.

(b.) The Contractor may transport onto the site, such necessary temporary facilities as trailers for field offices and storage, to be located where approved by the Contracting Officer.

H.5 INSURANCE - WORK ON A GOVERNMENT INSTALLATION (SEP 1989) (FAR 52.228-5)

(a) The Contractor shall, at its own expense, provide and maintain during the entire performance period of this Contract at least the kinds and minimum amounts of insurance required in the Insurance Liability Schedule or elsewhere in the Contract.

(b) Before commencing work under this Contract, the Contractor shall certify to the Contracting Officer in writing that the required insurance has been obtained. The policies evidencing required

insurance shall contain an endorsement to the effect that any cancellation or any material change adversely affecting the Government's interest shall not be effective:

(1) for such period as the laws of the State in which this Contract is to be performed prescribe; or

(2) until 30 days after the insurer or the Contractor gives written notice to the Contracting Officer, whichever period is longer.

(c) The Contractor shall insert the substance of this clause, including this paragraph (c), in subcontracts under this Contract that require work on a Government installation and shall require subcontractors to provide and maintain the insurance required in the Schedule or elsewhere in the Contract. The Contractor shall maintain a copy of all subcontractors' proofs of required insurance, and shall make copies available to the Contracting Officer upon request.

(d) Insurance Liability Schedule (FAR 28.307-2)

(1) Workers' compensation and employer's liability. Contractors are required to comply with applicable Federal and State workers' compensation and occupational disease statutes. If occupational diseases are not compensable under those statutes, they shall be covered under the employer's liability section of the insurance policy, except when Contract operations are so commingled with a Contractor's commercial operation that it would not be practical to require this coverage. Employer's liability coverage of at least $100,000 shall be required, except in states with exclusive or monopolistic funds that do not permit workers' compensation to be written by private carriers.

(2) General Liability.

a. The Contracting Officer shall require bodily injury liability insurance coverage written on the comprehensive form of policy of at least $500,000 per occurrence.

b. Property damage liability insurance shall be required only in special circumstances as determined by the agency.

(3) Automobile liability. The Contracting Officer shall require automobile liability insurance written on the comprehensive form of policy. The policy shall provide for bodily injury and property damage liability covering the operation of all automobiles used in connection with performing the Contract. Policies covering automobiles operated in the United States shall provide coverage of at least $200,000 per person and $500,000 per occurrence for bodily injury and $20,000 per occurrence for property damage. The amount of liability coverage on other policies shall be commensurate with any legal requirements of the locality and sufficient to meet normal and customary claims.

(4) Aircraft public and passenger liability. When aircraft are used in connection with performing the Contract, the Contracting Officer shall require aircraft public and passenger liability insurance. Coverage shall be at least $200,000 per person and $500,000 per occurrence for bodily injury, other than passenger liability, and $200,000 per occurrence for property damage. Coverage for passenger liability

bodily injury shall be at least $200,000 multiplied by the number of seats or passengers, whichever is greater.

(5) Vessel liability. When Contract performance involves use of vessels, the Contracting Officer shall require, as determined by the agency, vessel collision liability and protection and indemnity liability insurance.

(6) Environmental Liability If this contract includes the transport, treatment, storage, or disposal of hazardous material waste the following coverage is required.

The Contractor shall ensure the transporter and disposal facility have liability insurance if effect for claims arising out of the death or bodily injury and property damage from hazardous material/waste transport, treatment, storage and disposal, including vehicle liability and legal defense costs in the amount of $1,000,000.00 as evidenced by a certificate of insurance for General, Automobile, and Environmental Liability Coverage. Proof of this insurance shall be provided to the Contracting Officer.

H.6 IDENTIFICATION OF GOVERNMENT-FURNISHED PROPERTY (APR 1984) (FAR 52.245-3):

(a) The Government will furnish to the Contractor the property identified in the schedule to be incorporated or installed into the work or used in performing the contract. The listed property will be furnished to the Contractor at the place designated by the Contracting Officer. The Contractor is required to accept delivery, unload and transport the property to the jobsite at its own expense. When the property is delivered, the Contractor shall verify its quantity and condition and acknowledge receipt in writing to the Contracting Officer. The Contractor shall also report in writing to the Contracting Officer within 24 hours of delivery any damage to or shortage of the property as received. All such property shall be installed or incorporated into the work at the expense of the Contractor, unless otherwise indicated in this contract. Delivery site location for Government Furnished Property is Wyckoff/Eagle Harbor Superfund Site.

(b) For purposes of calculating the amount of Washington State Use Tax to be included in its bid; the Contractor shall use an estimated value of $ 0.00 for Government-furnished Contractor-installed (GF/CI) equipment/property. Ultimately the actual cost of equipment furnished will be used to adjust the final contract amount by modification to reflect the user tax excluding Contractor markups, actually paid by the Contractor for GF/CI equipment schedule.

SCHEDULE OF GOVERNMENT FURNISHED PROPERTY

See Section 01150 GOVERNMENT FURNISHED PROPERTY, SERVICES, AND UTILITIES and Technical Exhibit TE-2 “Government Furnished Property, Equipment and Materials Inventory.”

H.7 APPROVALS BY GOVERNMENT

Unless expressly stipulated elsewhere in this contract as being excepted from this provision, wherever this contract provides for submittal of designs, components, or other items for approval of the Contracting

Officer or other authorized Government representative, such approvals shall not be construed as a complete check as to the adequacy of said design or item, nor as an agreement that the design or item will meet the requirements of the Performance Work Statement. Such approvals are for the purpose of ensuring Government knowledge of Contractor's plans and progress and will indicate only that the Contractor's general approach toward meeting contractual requirements is satisfactory. Such approvals shall in no way relieve the Contractor of the responsibility for any error or deficiency which may exist in the submitted design or other item, as the Contractor shall be responsible for meeting all the requirements of the contract.

H.8 CONTRACT DRAWINGS, MAPS, AND SPECIFICATIONS (OCT 1996) (52.0236-4001 EBS)

(a) The Government--

(1) Will provide the Contractor, without charge, one set of contract drawings on hardcopy and one set of specifications in electronic format on a compact disk.

(b) The Contractor shall--

(1) check all drawings and reference data furnished immediately upon receipt;

(2) Compare all drawings and verify the figures before laying out the work;

(3) Promptly notify the Contracting Officer of any discrepancies; and

(4) Be responsible for any errors which might have been avoided by complying with this paragraph (b).

(c) Large scale drawings shall, in general, govern small scale drawings. Figures marked on drawings shall, in general, be followed in preference to scale measurements.

(d) Omissions from the drawings or specifications or the misdescription of details of work which are manifestly necessary to carry out the intent of the drawings and specifications, or which are customarily performed, shall not relieve the Contractor from performing such omitted or misdescribed details of the work, but shall be performed as if fully and correctly set forth and described in the drawings and specifications.

H.9 EXISTING DRAWINGS AND DETAILS

Existing drawings are furnished for information only. The Government makes no representation as to the completeness or accuracy of these drawings. Minor deviations can be anticipated and shall not be the basis for a claim for extra compensation. The operation of this facility is ongoing and includes updating and repair of existing systems and equipment. The Contractor shall update the existing drawings to reflect all changes implemented during the contract period.

H.10 DRAWINGS AND OTHER DATA TO BECOME PROPERTY OF GOVERNMENT

All designs, drawings, specifications, notes, and other work developed in the performance of this contract shall be and remain the sole property of the Government.

H.11 WORK AUTHORIZATION DIRECTIVES

The Work Authorization Directive (WAD) system is a series of numbered directives issued to the Contractor for non-routine maintenance/repair work items to be executed under the contract and requiring immediate response not suitable for issue of a Task Order. The WAD system will be used only when specifically authorized by the Contracting Officer. (See provisions for a Task Order under Section 01250 TASK ORDER PROCEDURES.) Examples of such features are pump replacement, well screen repair, or other miscellaneous mechanical/electrical/plumbing/welding /painting/labor work of a non-routine nature. Each WAD contains an agreed-upon scope and budget amount. The dollar amount of the WAD shall be limited to $50,000 and it may not be exceeded without the approval of the Contracting Officer. Normally, a WAD will be issued after agreement on the scope and budget cost estimate for the work included. The WAD will include labor rates for the skilled craftsman from the Price Schedule. If there is a delay in agreement regarding the budget amount or other features of a WAD, the Contracting Officer may direct the Contractor to perform the work under emergency procedures. In cases where the nature of the work is no longer urgent, as determined by the Contracting Officer, the WAD may be converted to a normal Task Order.

Following issuance of a WAD, the Contractor will prepare sequentially-numbered work orders for execution of the work included in the WAD. The work order will include the number of the WAD, a description of the work, resources involved, and a budget estimate of the cost of the work order. The labor rates for the skilled craftsman will be the rates identified in the Bid Schedule unless the rate is not separately listed. The contractor will agree to the level of effort for each skill before work is initiated under the Work Order process. If materials are needed from the Spare Parts, a Spare Parts Requisition will be prepared, identifying the equipment and any accessories. The Spare Parts Requisition will need to be signed by the Government Site Manager or Project Manager before the item is taken from the spare parts inventory. Upon agreement, the budget amount will be a fixed price. The cumulative budget estimate for work orders submitted for each WAD shall not exceed the total budget estimate for the WAD without approval of the Contracting Officer.

The Contractor shall maintain backup data justifying all expenditures in the Work Orders under each WAD, and will provide cumulative expenditure status reports (actual against budget) for each WAD included in a payment request. When the total dollar amount of the Work Orders in the WAD reaches but does not exceed the maximum amount of the WAD, all of the Work Orders in the WAD will be combined and processed under normal modification procedures. Note provisions for invoices and payments specified in Section G CONTRACT ADMINISTRATION DATA, particularly G.2 (b).

H.12 VARIATIONS IN ESTIMATED QUANTITIES - SUBDIVIDED ITEMS (MAR 1995) (EFARS 52.212-5001): This variation in estimated quantities clause is applicable only to Item Nos. 0005, 0006, 0008AA/AB, and 0008AC/AD.

(a) Variation from the estimated quantity in the actual work performed under any second or subsequent sub-item or elimination of all work under such a second or subsequent sub-item will not be the basis for an adjustment in contract unit price.

(b) Where the actual quantity of work performed for the specified Item Nos. is less than 85 ? of the quantity of the first sub-item listed under such item, the Contractor will be paid at the contract unit price for that sub-item for the actual quantity of work performed and, in addition, an equitable adjustment shall be made in accordance with the clause FAR 52.211-18, Variation in Estimated Quantities.

(c) If the actual quantity of work performed under the specified Item Nos. exceeds 115 percent or is less than 85 percent of the total estimated quantity of the sub-item under that item and/or if the quantity of the work performed under the second sub-item or any subsequent sub-item under the specified Item Nos. exceeds 115 ? or is less than 85 ? of the estimated quantity of any such sub-item, and if such variation causes an increase or a decrease in the time required for performance of this contract the contract completion time will be adjusted in accordance with the clause FAR 52.211-18, Variation in Estimated Quantities.

****

SECTION H2

SPECIAL CONTRACT REQUIREMENTS - SERVICES

PARAGRAPH NO.	PARAGRAPH TITLE
H2.1	TRANSITION OF WORK
H2.2	SUPERVISION
H2.3	GOVERNMENT PERFORMANCE OF SERVICE
H2.4	WORK BY THE CONTRACTOR
H2.5	MAINTENANCE AND REPAIR COST LIMITATION
H2.6	REPAIR AND REPLACEMENT (WAD/Indefinite Quantity Work Items)
H2.7	SERVICES BEYOND THE ORIGINAL SCOPE OF WORK
H2.8	SHOP DRAWINGS
H2.9	DISASTER EVENTS AND RESPONSE WORK

This page intentionally blank.

SECTION H2

SPECIAL CONTRACT REQUIREMENTS - SERVICES

H2.1 TRANSITION OF WORK

(a.) Prior to contractor's responsibility for the entire facility's operations, a transition period will be used for familiarization, training and learning the characteristics of the existing treatment facilities in accordance with requirements of Section 01120 "Contract Transition and Interface." The Contractor is to submit a "Transition Plan" as outlined in Section 01120: "Contract Transition and Interface."

(b.) The Contractor shall begin the transition period under this contract on the date approved by the Contracting Officer.

(c.) The Contractor is to assume full responsibility for the Treatment Facility and its operation upon completion of the transition period.

H2.2 SUPERVISION

The Government shall not exercise any supervision or control over the contractor's employees performing services under this contract. Such employees shall be accountable not to the Government, but solely to the contractor, who in turn, is responsible to the Government.

H2.3 GOVERNMENT PERFORMANCE OF SERVICE

(a.) If, for any reason, the Contractor fails to perform any services covered by this contract, or should any emergency require performance of services beyond the capability of the Contractor, the government may, if the Contracting Officer determines that the mission is endangered, perform or supplement performance of such contract services with Government personnel or other contractor. Such performance shall not constitute a breach of contract by the Government or a termination for convenience by the Government within the meaning of FAR 52.249-2.

(b.) If the Government performs services with Government personnel or other contractor because of the Contractor's failure to perform or an emergency as provided in paragraph 8(a.) above, the Contractor shall permit the Government to use and operate such equipment as is necessary to perform the function. The Government's right to use Contractor-owned or Contractor leased equipment, pursuant to this subparagraph; (2) shall cease in the event of termination pursuant to FAR 52.249.2, Termination. During this period, any Contractor-owned or leased equipment used by the Government shall be maintained by the Government.

(c.) The Government's right to perform or supplement performance of contract functions with Government personnel includes such actions during periods of disaster, war, emergency, police action, or acts of God.

H2.4 WORK BY THE CONTRACTOR

As a minimum, the Contractor selected for this procurement shall have as part of its own personnel staff all employees regularly performing daily routine operations and maintenance. Housekeeping services, major maintenance tasks, design services, and certain other specialty work items may be subcontracted.

H2.5 MAINTENANCE AND REPAIR COST LIMITATION

The Contractor's liability under the firm fixed-price portion of the contract for maintenance and repair not covered under a warranty shall be limited as follows (All terms are subject to the definitions under Section 01100 "Definitions And Terms"):

(a) For each Activity Described Herein Within a Monthly Billing Period

(1) Trouble/Service Calls. This category is composed of three types of work: routine calls, urgent calls, and emergency calls. Trouble calls, including emergency calls, are part of the firm fixed-price portion of the Contract within the following limits:

(i) Labor. All labor up to the first 4 hours for each trouble call occurrence to resolve any condition during the monthly period regardless of number of trouble call events which are initiated during the Contractor's regular on-site work hours. All labor up to the first 4 hours for each trouble call occurrence to resolve any condition during each monthly contract period for up to three trouble call events which are initiated after the Contractor's regular on-site work hours. Initial response will be assumed to be one "plant operator." All time for initial response by plant operator exceeding this limit per each event will be paid under a WAD (See the clause at H-11 WORK AUTHORIZATION DIRECTIVES) or by an indefinite quantity contract line item for "Trouble/Service Call" using the "Task Order Procedures, as determined by the Contracting Officer." Any additional personnel required for corrective maintenance resulting from the initial service call are then subject to the limitation under H2.5 (a) (2) "Corrective and Minor Maintenance."

(ii) Materials. Refer to paragraph 2(ii) below.

(2) Corrective and Minor Maintenance.

(i) Labor. The costs up to the first $2,500 cumulative total cost for any number of corrective and minor maintenance jobs (under any one or more of the CLIN's for "Electrician," "Plumbing /Pipefitting," "Machinery Maintenance Mechanic," and "Welder" or other laborer during each monthly contract period for O&M services, are borne by the Contractor as a part of the firm fixed-price. Whenever the actual direct labor costs necessary to perform the corrective maintenance actions reaches $2,500 during the period, the Contractor shall contact the Contracting Officer prior to continuing work. All labor costs for any combination of corrective and minor maintenance jobs exceeding this limit will be paid under a WAD (See the clause at H-11 WORK AUTHORIZATION DIRECTIVES) or by an indefinite quantity contract line item for "Trouble/Service Call" using the "Task Order Procedures, as determined by the Contracting Officer." The Contractor is responsible to carry out all work approved by the Contracting Officer

or COR. The Contractor shall demonstrate to the Contracting Officer or COR that hours invoiced are accurate. If a trouble call initiates a corrective and minor maintenance action the $2,500 cost limitation does not include the 4 hour limit for a trouble call response specified in H2.5 (a) (1) (i).

EXAMPLE: 100 cumulative direct labor hours, resulting in $8,500 labor costs, for one or more repair items during the monthly contract period. The first $2,500 is paid by the Contractor in addition to the first 4 hours for each associated trouble call response time for the separate corrective and minor maintenance actions. The remaining $6,000 of direct labor costs, demonstrated by the Contractor to the Contracting Officer or COR, are paid under a WAD or as an indefinite quantity item under the associated CLIN(s).

(ii) Materials. The costs of materials up to the first $500.00 total (excluding pre-expended bin materials and supplies) for each trouble call response or corrective maintenance/repair job during the monthly contract period and a cumulative total cost limitation for materials to perform the various repair or corrective maintenance actions of $1,000 during each monthly contract period are borne by the Contractor as a part of the firm fixed-price. Whenever the total costs for materials to perform the repair or corrective maintenance actions reaches the individual or cumulative total during the monthly contract period the Contractor shall contact the Contracting Officer prior to continuing work. The Contractor is responsible to carry out all work approved by the Contracting Officer or COR.

EXAMPLE: A submersible pump, with a documented invoice cost of $1,700.00, fails and must be replaced and $250 of other material costs are incurred. A previous repair action during the same monthly period resulted in $700 in materials costs. $1,000.00 of the cost of materials is paid by the Contractor and the remaining $1,650. of the total cost of the pump and other materials is reimbursed to the Contractor. Any additional approved materials costs occurring during the same monthly contract period are fully reimbursed to the Contractor. The excess-costs materials costs for corrective maintenance actions during the period are paid under a WAD or an indefinite quantity item.

(b) Requirements for Materials Replacement

(1) For material items, the Contractor shall procure the items on a competitive basis or, if there is lack of competition, provide justification. Discounts and rebates on items provided to the Contractor shall be credited to the Government. All purchase documents shall be made available for Contracting Officer or COR review and audit. The Contracting Officer or his/her designated representative reserves the right to approve proposed replacement items considering quality, size, efficiency and aesthetic requirements of all items. Procedures of FAR part 13 apply. The Contractor shall demonstrate the price is fair and reasonable for replacement material purchases up to $2,500.00. Over $2,500.00, the Contractor shall obtain quotes from three competitive sources to ensure the lowest price is available to the Government. The Contractor shall document the competitive records of purchases upon request by the Government.

(2) The Contractor shall bill for replacement materials once each month. The billing shall be supported by an itemized list of all replaced materials used, showing the item description, quantity, unit cost, total cost and the end use of the item. The Contractor shall maintain original delivery tickets, sales slips, or other documents identifying items purchased under the materials portion of the contract.

Purchase documents shall be available for Contracting Officer review and audit. All original sales tickets shall be turned in with invoice for monthly payment. If not accompanied by the original sales ticket the item will not be paid until furnished.

(3) Any item with a replacement cost over $500.00 removed from equipment or facilities shall be inspected by the Contracting Officer or COR prior to final disposition. If such an item is removed due to an emergency or work after duty hours, the Contractor shall retain that item for the Contracting Officer or COR 's inspection.

(4) Items with a replacement cost over $500.00 which are deemed by the Contracting Officer or COR to be repairable shall be repaired by the Contractor for reuse by the Contractor. Repaired items shall be used before newly purchased items are used.

(5) Items with a replacement cost over $500.00 which are determined by the Contracting Officer or COR to be nonrepairable shall be disposed of by the Contractor. Items identified by the Contracting Officer or COR as having salvage value, such as pumps, motors, valves, etc., shall be properly tagged and stored as directed by the Contracting Officer. Any substance or item considered an environmental waste (such as grease, used oil, etc.) shall be disposed of by the Contractor at an off-site facility in accordance with the specified requirements in the technical specifications of this contract, and in accordance with Federal, state, and local ordinances. Records of such disposals shall be maintained by the Contractor at the treatment plant site for the duration of the contract and turned over to the Government after the completion of the contract.

(c) All labor costs incurred under the fixed price portion of the contract as specified in this clause will be based on the “Labor Hour Unit Price” as defined under Section 01100 DEFINITIONS AND TERMS. All materials costs incurred under the fixed price portion of the contract as specified in this clause will be based on the “Direct Material Costs” defined under Section 01100 DEFINITIONS AND TERMS.

H2.6 REPAIR AND REPLACEMENT (WAD/Indefinite Quantity Work Items)

(a.) Contractor Repairs and Replacement. The Contractor shall be responsible for the repair and replacement of all items of materials, parts or equipment of the Treatment Plant, unless specifically obtained otherwise by the Government. Indefinite Quantity Work includes the maintenance, repair, minor construction and service type work requirements that are beyond the scope of maintenance work cost limitations specified under paragraph H2.5 and the firm-fixed price work under the contract.

(b.) Repairs and Replacement. If it becomes necessary to incur repair or replacement (including spare parts) expense with respect to items of materials, parts or equipment designated as indefinite quantity, then the cost of such item shall be borne by the Government.

(c.) Notice to the Government. The Contractor, before repairing or replacing or agreeing to repair or replace any structure, parts or equipment which would be paid for by the Government as part of the indefinite quantity work in accordance with paragraph H2.6.b hereof, shall notify the Government of its intent to replace structure, parts or equipment and report the circumstances thereof including a breakdown of cost and method of repair or replacement. (Use procedures for a WAD or Task Order for such work.) Such notice shall be given at least thirty (30) days in advance of the date the Contractor intends so to

repair or replace structure, parts or equipment for items amenable to future maintenance. The Government will notify the Contractor within thirty (30) days if the Government approves the need for any repair or replacement. If the Contractor in good faith determined an emergency to exist or immediate repairs or replacements are necessary to mitigate damages and/or shutdown, the Contractor shall notify the Government immediately and upon approval by the Contracting Officer proceed with the repair or replacement under the requirements of the clause H.11 WORK AUTHORIZATION DIRECTIVES. The Government shall have access to all structures, parts or equipment for purposes of inspection to determine the necessity of the replacement.

H2.7 SERVICES BEYOND THE ORIGINAL SCOPE OF WORK

The Contractor is advised not to perform any extra services under this contract requested by any person, orally or in writing, which the Contractor considers to be a change in work or services required and which necessitates an adjustment in the contract price, until the Contractor has been requested by the Contracting Officer to: (a) review a WAD or a supplemental Task Order or Scope of Work; (b) make a written proposal covering such extra services; and (c) has negotiated a mutually satisfactory price and received a written modification signed by the Contracting Officer. Any such extra services executed by the Contractor without the appropriate written notice is undertaken at its own risk and expense.

H2.8 SHOP DRAWINGS

In the event major system equipment items are to be modified and/or replaced, shop drawings shall be prepared in strict accordance with the design details of the existing system. These drawings shall be clear, complete and thoroughly checked. Submittals shall be submitted in accordance with Section 01330, SUBMITTAL OF CONTRACT DATA and Section 01610 MATERIALS AND SUPPLIES. The payment for such shop drawings shall be included as an integral cost under the replacement costs for the equipment.

H2.9 DISASTER EVENTS AND RESPONSE WORK

The Contractor shall monitor weather conditions and provide notice to the Contracting Officer of any conditions which could endanger the facility. In the event Government property is endangered by causes of disastrous nature, such as hail, flood, tornado, etc., the Contracting Officer shall determine the emergency action necessary to protect Government and personal property, and shall direct the Contractor to do emergency work to the extent necessary. An equitable adjustment shall be made for directed work. In addition to the provisions of the clause H2.3 GOVERNMENT PERFORMANCE OF SERVICE, the Contractor will not be liable for any unperformed work or for operating conditions beyond the allowable requirements during a disaster event, including a 100 year flood event, if all reasonable and prudent efforts with the appropriate safety considerations have been made to comply with operating standards and Contracting Officer directives.

****

This page intentionally blank.

Attachment J4

TABLE OF CONTENTS

TECHNICAL SPECIFICATIONS

Section No.	Title
DIVISION 1 – GENERAL REQUIREMENTS	
01100	Definitions And Terms
01110	Summary of Work
01120	Contract Transition and Interface
01140	Supplementary Requirements
01145	Site Specific Supplementary Requirements
01150	Government Furnished Property, Services, and Utilities
01240	Cost and Performance
01250	Task Order Procedures
01270	Measurement and Payment
01330	Submittal of Contract Data
01351	Safety, Health, and Emergency Response (HTRW/UST)
01401	Management Plan and Field Reports
01410	Environmental Protection
01430	Contractor Qualifications
01450	Chemical Data Quality Control
01451B	Contractor Quality Control - Services
01501	Temporary Facilities and Controls
01610	Materials and Supplies
01710	Existing Conditions
01782	Closeout Records
01785	Warranties
01830	Treatment Plant Operation And Maintenance

Section No.	Title
DIVISION 2 – SITEWORK	
02120	Transportation and Disposal of Hazardous And Non-Hazardous Materials
DIVISIONS 3 THROUGH 16 – (NOT APPLICABLE)	
	TECHNICAL EXHIBITS
TE-1	General Description of Facilities to be Operated and Maintained
TE-2	Government Furnished Property, Equipment and Materials Inventory
TE-3	Reserved
TE-4	Historical Maintenance and Operations Data

- o 0 o -

SECTION 01100

DEFINITIONS AND TERMS

1.1 GENERAL

Wherever used in the technical specifications, the following terms have the meanings indicated which are applicable to both the singular and plural thereof.

1.2 ABBREVIATIONS

Wherever the following abbreviations are used, they are to be construed the same as the respective expressions represented:

AOP	Advanced Oxidation Process
ARAR	Applicable, or Relevant and Appropriate Requirements
bgs	Below ground surface
BTU/gal	British thermal units per gallon
?C	Degrees Celsius
CDR	Contract Discrepancy Report
CEGS	Corps of Engineers Guide Specifications for Construction
CFR	Code of Federal Regulations
CFM	Cubic feet per minute
CLIN	Contract Line Item Number
CM	Contract Manager
CO	Contracting Officer
DAF	Dissolved air flotation, or diffuse air flotation
dBA	Decibels
DNAPL	Dense Non-Aqueous Phase Liquid
DNR	Washington State Department of Natural Resources
DOD	Department of Defense
DTS	Distributed temperature sensor
EPA	United States Environmental Protection Agency
EPDM	Ethylene propylene diene monomer
?F	Degrees Fahrenheit
FAR	Federal Acquisition Regulation
FS	Feasibility Study
ft^2	Square feet
gpd	Gallons per day
gpm	Gallons per minute
GWDP	Groundwater Discharge Permit

HDPE	High density polyethylene
hp	Horsepower
HPO	Hydrous Pyrolysis Oxidation
ID	Inside diameter
ID/IQ	Indefinite Delivery/Indefinite Quantity
ITTAP	Insitu Thermal Technologies Advisory Panel
kg/s	Kilograms per second
kJ/m^3	Kilojoules per cubic meter
kPa	Kilopascal
kW	Kilowatt
lbm/hr	Pounds-mass per hour
LIF	Laser induced fluorescence
LNAPL	Light Non-Aqueous Phase Liquid
mA	Milliamps
m^3/day	Cubic meters per day
mg/L	Milligram per liter
MLLW	Mean lower low water
MTCA	Washington State Model Toxics Control Act
MWh	Megawatt – hour
NAD83	North American Datum 1983
NAPL	Non-aqueous phase liquids
NFPA	National Fire Protection Association
NGVD	National Geodetic Vertical Datum
NOx	Nitrogen oxides
NPDES	National Pollutant Discharge Elimination System (permit)
NPT	National Standard Taper Pipe Thread
NRT	Natural Resources Trustees
OC	Organic Carbon
OD	Outside Diameter
O&M	Operation and Maintenance
OSHA	Occupational Safety and Health Administration
OU	Operable Unit
PAH	Polynuclear aromatic hydrocarbons
PCP	Pentachlorophenol
PE	Polyethylene
P&ID	Piping and Instrumentation Diagram
PMI	Preventive Maintenance/Inspection
PP	Polypropylene
ppm	Parts per million
psia	Pounds per square inch (atmosphere)
psig	Pounds per square inch (gauge)
psig/ft	Pounds per square inch (gauge) per foot
PV	Pore volume equivalent of condensate

PVC	Polyvinylchloride
QC	Quality Control
QCP	Quality Control Plan
RCRA	Resource Conservation and Recovery Act
RI	Remedial Investigation
ROD	Record of Decision
SAC	Spent activated carbon
SCAPs	Site Characterization and Analysis Penetrometer
Scfm	cubic feet per minute at Standard Temperature and Pressure (298.15 K and 101.33 kPa, unless otherwise noted)
SOx	Sulfur oxides
SVE	Soil Vapor Extraction
TAPs	Toxic air pollutants
TOCs	Total Organic Compounds
USACE	United States Army Corps of Engineers
USGS	United States Geological Survey
UTS	Universal Treatment Standards
VOCs	Volatile organic compounds
WAD	Work Authorization Directive
WDOE	Washington Department of Ecology
WSPCS	Washington State Plane Coordinate System
yd^3	Cubic yards

1.3 DEFINITIONS

1.3.1 By-pass. A pipe or conduit which permits untreated water to be moved around a treatment plant or any unit of the plant. By-passes are usually found in plants which receive combined flow or high infiltration rates and are authorized to prevent flooding of units, or allow repair of units by use of parallel units.

1.3.2 Check. To examine, test, or compare with a standard to verify that the unit under surveillance is operating within design specifications.

1.3.3 Corrective Maintenance. Corrective maintenance is maintenance and repair work that is required to return a system or component to proper operating condition. Corrective maintenance shall be required on a routine basis (operator maintenance), as a result of preventive maintenance inspections, or as a result of service calls. Corrective maintenance is limited in scope; is subject to a total Contractor cost liability in any monthly operating period in accordance with Clause H2.5 of section H2, and does not reasonably require detailed job planning.

1.3.4 Defective Service. A service output that does not meet the standard of performance specified in the contract for that service.

1.3.5 Direct Material Costs. The actual vendor invoice charges for materials used for performance of work under this contract. Direct material costs shall include transportation charges when such charges are included on the invoice by the vendor, as well as any discounts allowed for prompt payment or warranty credits. When questions arise concerning the cost of materials, material costs shall be based on the lowest of quotes provided by the Contractor from at least three different commercial vendors for the direct material costs. The Government retains the right to obtain additional quotes in questionable situations. The lowest price will be used.

1.3.6 Frequency of Service

1.3.6.1 Annual (A). Services performed once during each 12 month period of the contract.

1.3.6.2 Semiannual (SA). Services performed twice during each 12 month period of the contract at intervals of 160 to 200 calendar days.

1.3.6.3 Quarterly (Q). Services performed four times during each 12 month period of the contract at intervals of 80 to 100 calendar days.

1.3.6.4 Monthly (M). Services performed 12 times during each 12 month period of the contract at intervals of 28 to 31 calendar days.

1.3.6.5 Semimonthly (SM). Services performed 24 times during each 12 month period of the contract at intervals of 14 to 16 calendar days.

1.3.6.6 Weekly (W). Services performed 52 times during each 12 month period of the contract at intervals of 6 to 8 calendar days.

1.3.6.7 Twice weekly (2W). Services performed twice a week, such as Monday and Thursday or Tuesday and Friday.

1.3.6.8 Three times weekly (3W). Services performed three times a week, such as Monday, Wednesday and Friday.

1.3.6.9 Daily (D5). Services performed once each day, Monday through Friday, including holidays unless otherwise noted.

1.3.6.10 Daily (D7). Services performed once each day, seven days per week, including weekends and holidays.

1.3.7 Government-Furnished property (GFP). Property owned by the Government and furnished for Contractor use.

1.3.8 Labor Hour Performance Standards. A labor hour job estimating system for assessing the average time necessary for a qualified craftsman working at a normal pace, following acceptable trade methods, receiving capable supervision, and experiencing normal delays to perform defined amounts of work of a specified quality. The Contracting Officer may utilize a standard such as the R. S. Means Maintenance and Repair Cost Data to evaluate the repair performance when applicable.

1.3.9. Labor Hour Unit Price. A labor hour unit price is the unit price bid by the Contractor to provide one performance standard hour of work-in-place. The unit price bid includes all direct and indirect costs associated with performing a standard hour of work. The unit price would typically include the Contractor's hourly craft wage, adjusted to allow for the bidder's workforce productivity (i.e. the Contractor's estimate of how its workforce will perform in relation to applicable performance standards); and all costs for travel, pre-expended bin materials and supplies, ordering and stockpiling job material, profit, tools, equipment, field and home office overhead, clerical support, supervision, inspection, fees, taxes, licenses, permits, insurance, etc. In short, all costs associated with providing a specific standard hour of effort.

1.3.10 Latent Defects. Latent defects are defects that are present in a hidden or undeveloped state and are not visible or apparent at the time of inspection, but which become obvious or come into being at some future time.

1.3.11 Lot. The total number of potential service outputs in a surveillance period.

1.3.12 Maintenance. The work required to preserve and maintain a facility in such condition that it may be effectively used for its designated functional purpose. Maintenance includes work done to prevent damage that would be more costly to restore than to prevent. Maintenance includes work to sustain components, or to investigate and identify the source of problems before they become serious. Examples include but are not limited to, renewing disposable filters, painting, caulking, waterproofing, lubricating, flushing, calibrating, adjusting, refastening loose siding and sealing bituminous pavements.

1.3.13 Major Defect: A major defect is a defect that is likely to reduce materially the usability or the unit of service for its intended purpose. A major defect is a defect that judgment and experience indicate would result in hazardous or unsafe conditions for individuals using, maintaining or depending upon the service delivery, or a defect that judgment and experience indicate requires corrective action to achieve substantial compliance with contract requirements. A major defect is also classified as a collection of 10 or more minor defects in the same general area, all close to each other.

1.3.14 Minor Defect: A minor defect is a defect that is not likely to reduce materially the usability of the unit of service for its intended purpose, or is a departure from established standards having little bearing on the effectiveness of the unit of service. A minor defect is a defect that judgment and experience indicates that is not a substantial deviation from requirements and generally does not require reperformance for overall performance to be considered as satisfactory.

1.3.15 NPDES Compliance Parameter Testing. Those tests required to ensure that the requirements of the NPDES permit or interim operation standards are met.

1.3.16 Operating Process Control Testing. Those tests needed by the operators to determine process efficiency and status, and which indicate problem areas in the treatment plant at any given time.

1.3.17 Pre-expended bin materials and supplies. The minor materials and supplies, including those that are incidental to the job, for which the total adjusted cost of any one material line item shown on the material estimate is $10.00 or less. Examples of pre-expended bin materials and supplies include, but are not limited to, solder, lead, flux, electrical connectors, electrical tape, fuses, nails, screws, bolts, nuts, washers, spacers, masking tape, sand paper, solvent, cleaners, lubricants, grease, oil, rags, mops, glue, epoxy, spackling compound, joint tape, gases, refrigerants, refrigeration fittings, plumbers tape and compound, clips, welding rods, heat sinks, electrical outlet, switches, cover plates, plumbing fixtures and fittings, touch up paint, and any other item for which the total line item adjusted cost is $10.00 or less.

1.3.18 Preventive Maintenance. Preventive maintenance (PM) is scheduled maintenance that consists primarily of inspection, cleaning, lubrication, adjustment, calibration, and minor part and component replacement (e.g. filters, belts, hoses, fluids, oil and grease) as required to minimize malfunctions, breakdown and deterioration of equipment. The PM is based upon manufacturer's recommendations, handbooks, operating/service manuals, Contractor expertise, industry standards, and general engineering judgment.

1.3.19 Process Control Testing. Those tests required to keep the plant working efficiently, give early warning of operating problems and to ensure the requirements of the NPDES permit, the GWDP, and effluent quality are met.

1.3.20 Quality Assurance. A planned and systematic pattern of all actions taken by the Government to provide confidence that adequate technical requirements are established, products and services conform to established technical requirements, and satisfactory performance in accordance with the requirements of Section C is achieved.

1.3.21 Quality Control. Those actions taken by the Contractor to control the performance of services to ensure that they conform to the contract requirements.

1.3.22 Random Sampling. A sampling method in which each service output in a lot has an equal chance of being selected for quality assurance surveillance.

1.3.23 Reactive Maintenance. Often called breakdown maintenance or "run to failure (RTF)." Reactive maintenance or equipment repairs are performed when the deterioration in a machine's condition causes a functional failure.

1.3.24 Refuse. Any discarded material resulting from operation and maintenance of the Treatment Plant, including grit and screenings, that can legally be disposed of in a municipal landfill.

1.3.25 Repair. Repair is the restoration of a piece of equipment, a system, or a facility to such condition that it may be effectively utilized for its intended purposes. Repair may be overhaul, reprocessing, or replacement of constituent parts or materials that have deteriorated by action of the elements or usage and have not been corrected through maintenance, or replacement of the entire unit or system if beyond economical repair.

1.3.26 Replacement of Obsolete Items (ROI). Components of the facility which are still operating but are replaced at the request or approval of the Government because of building codes, safety, or obsolescence or upgrading. These items require a task order or modification to the contract to be executed prior to the work.

1.3.27 Response Time. Response time is defined as the time allowed the Contractor after initial notification of a work requirement to be physically on the premises at the work site with appropriate tools, equipment, and materials, ready to perform the work required.

1.3.28 Sample. A sample consists of one or more service outputs drawn from a lot for quality assurance surveillance. The number of outputs in the sample is the sample size.

1.3.29 Spill. Any discharge or release of hazardous material, including untreated product, from the ordinary containers employed in the normal course of storage, transfer, processing or uses.

1.3.30 Trouble Calls. Trouble calls are reactive maintenance work that is generally called in by Facility Managers or maintenance workers or automated alarm system. This category is composed of three types of work defined below. The Contractor's liability under the firm fixed-price portion of the contract for trouble calls is limited in accordance with clause H2.5 MAINTENANCE AND REPAIR COST LIMITATION of Section H2.

1.3.30.1 Routine Calls and Urgent Calls. These calls are minor facility problems that are too small to be estimated and are generally responded to by grouping trouble calls by craft and location.

1.3.30.2 Emergency Calls. These calls, which normally start as a trouble call, require immediate action to prevent loss of, or damage to property; to restore essential services that have been disrupted; to affect the operation of critical equipment or systems as identified or to eliminate hazards to personnel or equipment. Emergency work is usually a response-type work effort, often initially worked by trouble call technicians. Due to its nature, emergency work is not restricted to a level of effort such as Routine Calls or corrective maintenance. If emergency work exceeds the Contractor’s liability cost limitation specified under Clause H2.5 of Section H, the emergency will be stabilized as approved by the Contracting Officer, and the work will then be accomplished under the indefinite quantity portion of the contract.

1.3.31 Wastes. Any material, such as used oil, product or hazardous waste, that is restricted from being disposed of in a municipal landfill.

1.3.32 Work Authorization Directive. See Clause H-11 WORK AUTHORIZATION DIRECTIVES.

END OF SECTION

This page intentionally blank.

SECTION 01110

SUMMARY OF WORK

PART 1 - GENERAL

1.1 GENERAL

1.1.1 This Section provides a summary of the various contract work elements. This summary does not provide the technical detail for particular work activities, but describes the work as a whole, providing overall perspective to the separate tasks and their interrelationships. This Section shall be used in conjunction with all other sections and the attachments thereto to establish the total work requirements.

1.1.2 The Contractor is advised that continuing remediation work will be performed on the Wyckoff/Eagle Harbor Superfund site on Bainbridge, Island Washington and this contract is subject to certain procurement and construction management/oversight responsibilities by the United States Army Corps of Engineers (USACE) that are established under an Interagency Agreement with the United States Environmental Protection Agency (EPA).

1.1.3 Record of Decision

The Record of Decision (ROD), dated February 2000, is the formal decision document for remediation of the soil and groundwater. The ROD defines the cleanup plan as written by the EPA, and agreed to by Ecology. The cleanup plan includes steam injection, extraction and treatment of groundwater, vapor, and NAPL, monitoring the unconfined aquifer; monitoring the quality of groundwater; and monitoring of the liquid and vapor treatment systems. For a copy of the ROD, see the Attachment J6 under Section J.

1.1.4 Objectives

The purpose of this contract is to operate and maintain an existing water treatment plant.

1.2 SUMMARY OF WORK

1.2.1 General

The work consists of the operation and maintenance of an existing treatment plant. Certain monitoring responsibilities will be performed by the Contractor with analytical chemistry support from EPA. The Contractor will assume responsibility for the continued operation and maintenance of the groundwater extraction and treatment for the duration of the contract period. The work shall include operation of the systems, reporting monitoring results, and consulting with USACE and others as directed.

1.2.2 Project O&M Activities

The Contractor shall furnish all labor, supervision, tools, materials, equipment, supplies and consumable items except Government furnished equipment and materials and supplies (See Section 01150, GOVERNMENT FURNISHED PROPERTY, SERVICES, AND UTILITIES and Technical Exhibit TE-2), incidental engineering, and transportation necessary for operation, maintenance, and repair of equipment and support systems of the Treatment Plant and its associated facilities and site works on the Wyckoff/Eagle Harbor Superfund Site in Bainbridge Island, Washington, in accordance with the

requirements specified under this contract. The work shall include treatment of groundwater, removal of product, corrective and preventive maintenance, repair, operation of treatment facilities, report preparation, and other services as specified in these specifications and Technical Exhibits 1 through 4 attached at the end of the Technical Specifications (end of J4). The Contractor shall perform to all standards in the contract. Technical Exhibits 1 and 4 and Attachment J5 provide detailed descriptions of the facilities and site features and methods of operation of existing facilities.

1.2.2.1 Plant Operation

Operate the facility to treat contaminated groundwater at or below the standards specified in Section 01450, CHEMICAL DATA QUALITY CONTROL, to provide for the effective and efficient operation and maintenance of the facility during the contract period. The Contractor shall provide and manage the chemicals and utilities used and required in plant operations. The Contractor shall comply with the specifications.

1.2.2.2 Performance Improvement

The Contractor shall develop and implement procedures such that the treatment process is optimized.

1.2.2.3 Miscellaneous Maintenance

Housekeeping, custodial, and cleanup services, and grounds maintenance of the operating facility and support trailers on site, including the Government office trailer, shall be provided by the Contractor.

1.2.2.4 Contract Data

A component of this contract is the collection and reporting of monitoring data. The Contractor shall prepare submittals as indicated in other sections for the equipment, the Management Plan, and all data collected during the service phase and shall submit the data in an orderly manner to the COR.

1.2.3 Safety

The Contractor shall be responsible for complying with all Federal, state, and local safety standards and shall instruct employees in all appropriate safety measures in regards to (but not limited to) confined space entry, electrical hazards, mechanical equipment hazards, chemical hazards, temperature hazards, explosion and fire hazards, bacterial hazards, oxygen deficiency and noxious gas hazards, and laboratory hazards. The Contractor shall provide all safety equipment required for his employees. All work shall be accomplished in a manner that insures the protection of workers, and public health and safety. See Section 01351, SAFETY, HEALTH, AND EMERGENCY RESPONSE (HTRW/UST) for more detailed requirements.

1.2.4 Environmental

All work shall be accomplished in a manner that insures the protection of the environment; and complies with all environmental requirements and the specification requirements. See Section 01410, ENVIRONMENTAL PROTECTION for specific details.

1.2.5 Documentation And Records

The Contractor shall maintain at the site and furnish copies to the COR of all pertinent data records and reports as described in the specifications including operating logs, maintenance functions, discharge monitoring and analysis, and personnel daily sign-in sheets. All documentation, records, schedules, etc., as described in the specifications that are the responsibility of the Contractor are the property of the Government and shall remain so even upon termination of the contract. The Contractor shall keep these items current at all times. Documentation and records shall be turned over to the Government upon completion of the contract or when requested by the Contracting Officer or designated representative.

1.2.6 Minimum On-Site Operations

1.2.6.1 The extraction and groundwater treatment and related work elements shall be accomplished by the Contractor to meet required cleanup standards per specifications, with full consideration given to maintaining worker safety and health, protecting nearby communities, and mitigating further deleterious impacts to the environment during execution of the work.

1.2.6.2 The Contractor shall perform individual inspection of all process components and electrical and mechanical equipment, including related piping and control systems on a periodic basis not to exceed every month or as needed.

1.2.6.3 A comprehensive testing program shall be implemented by the Contractor during groundwater extraction and treatment to ensure that the groundwater extracted as delineated on the drawings meets required cleanup standards; adequate treatment is consistently achieved; all wastes are properly collected, transported, treated (as required), and disposed; and all appropriate and relevant environmental protection requirements are met.

1.2.6.4 The Contractor shall be responsible for the storage, transport, regeneration, and or disposal of all spent GAC, solid and hazardous waste generated at the site in accordance with Federal, state and local regulations and ordinances for the length of the contract.

1.2.6.5 Any water generated as the result of cleanup activities under this contract shall be collected, tested, and properly treated or disposed per specifications. This shall include water resulting from equipment decontamination and sampling procedures. Contaminated waste, such as used personal protective equipment or disposable sampling tools, and water or solid residues from decontamination activities found by testing to constitute hazardous waste shall be transported off-site for treatment (as required) and disposal at an approved treatment, storage, and disposal (TSD) facility.

1.2.6.6 The Contractor shall be responsible for maintaining all permits for off-site activities as required, and complying with all substantive requirements of the permit process for site work.

1.2.7 Miscellaneous Work Items

1.2.7.1 Implementing the existing and revising as needed the Management Plan (MP), composed of the plans and designs as listed in Section 01401: MANAGEMENT PLAN AND FIELD REPORTS.

1.2.7.2 Arrangements for securing the work site through coordination with the Contracting Officer (CO).

1.2.7.3 Demobilizing and decontaminating materials and equipment during cleanup operations, including all required off-site disposal of wastes.

1.2.7.4 Reporting as required in Section 01450 CHEMICAL DATA QUALITY CONTROL, and other sections as applicable.

1.2.7.5 Extraction, testing, and treatment of contaminated groundwater, and the testing of residual groundwater, to the limits shown in the drawings and defined in the specifications.

1.3 TRANSITION OF WORK AND CONTRACT INTERFACE

Refer to Section 01120 CONTRACT TRANSITION AND INTERFACE.

1.4 COORDINATION WITH WORK BY OTHERS

Work by others is anticipated to be performed in the vicinity or within the project site in concurrence with the scheduled performance of Work under these Contract Documents. CONTRACTOR shall coordinate the Work with other contractors to minimize conflicts and to maintain a cooperative effort in completion of the Work. Other work activities include but are not limited to the following:

A contractor performing Site Infrastructure Support construction work on the uplands and beaches at Wyckoff, including installing Phase III of the subtidal cap near the Log Rafting Area and the Mitigation Beach in Eagle Harbor.

A contractor installing the Distributed Temperature System (DTS) in the pilot area and support Zone at Wyckoff.

A contractor installing equipment and materials for the construction of the Thermal Remediation Pilot contract.

Government forces installing subsurface monitoring equipment.

Diving services provided by Government (Navy) divers or a contractor.

Other miscellaneous contract work.

1.5 REPLACEMENT AND MODERNIZATION

During the term of this contract, the Government may replace, renovate, or improve equipment, systems, facilities, components, and fixtures at the Government's expense and by means other than this contract. All replaced, improved, updated, modernized or renovated equipment, fixtures, facilities, components and systems shall be maintained, operated and /or repaired by the Contractor at no additional cost to the Government unless such changes result in an increase or decrease in contract requirements. Changes, replacements, or deletions which result in an increase or decrease in contract requirements will result in adjustments to the applicable contract price(s) in accordance with the CHANGES clause.

PART 2 - PRODUCTS NOT USED

PART 3 — EXECUTION (NOT USED)

END OF SECTION

SECTION 01120

CONTRACT TRANSITION AND INTERFACE

PART 1 - GENERAL

1.1 SEQUENCE OF WORK

The transition of work responsibility for the existing treatment plant shall be planned, scheduled, and performed in the following sequence to comply with the requirements of these contract documents and the requirements of appropriate Federal, state, and local regulatory agencies.

1.1.1 Administrative/Pre-Mobilization

The administrative/Pre-Mobilization activities start immediately after the notice to proceed. No on-site work, other than training and orientation, will be allowed during the administrative phase. The following work items but not necessarily only these items shall occur during this phase:

- Provide required entrance medical examinations;
- Develop and submit all required submittals designated for "review and approval", including the amendments to the MP, etc.;
- Develop and submit all other submittals designated for "information."
- Conduct site-specific safety training and site visits in accordance with the MP.
- Develop and submit a Transition Plan of the turnover of the operations of the existing treatment plant from the existing EPA contractor;

1.1.2 Operation and Maintenance (O&M) Services

These activities are further described in the following paragraphs.

1.1.2.1 Transition Activities

Existing treatment plant transition activities, in conjunction with the contractor operating facility at time of bidding, shall include familiarization and training activities as required, prior to initiation of and on-going performance of all O&M services for existing treatment plant systems (except Government furnished as specified). Required activities include the following items of work:

- Initiate Transition Plan on or about 3 DEC 2001 - The Government will furnish orientation to the Contractor's key management and supervisory personnel performing under this contract as specified in paragraph 1.2 EXISTING TREATMENT PLANT O&M TRANSITION.

- After completion of the transition from the existing contractor, the Contractor shall be responsible for all ongoing O&M operations at the existing treatment plant.

See paragraph 1.2 EXISTING TREATMENT PLANT O&M TRANSITION for detailed requirements under the transition period for existing treatment plant.

1.1.2.2 Project O&M Services

Responsibility for O&M Services starts immediately after completion of the transition period as determined by the Contracting Officer. The Contractor shall be prepared to fully commence complete project O&M operations upon the direction of the CO, and should not assume that Government or other contractor employees will be available to guide, direct or otherwise provide any orientation or support to the Contractor after "Initiation of Project O&M Services."

- Assumption of existing water treatment plant O&M anticipated to occur on or about 17 December 2001.

See paragraph 1.3 PROJECT O&M RESPONSIBILITIES for detailed requirements under the O&M contract period for existing treatment plant.

1.2 EXISTING TREATMENT PLANT O&M TRANSITION

The Contractor shall obtain training on the operation of the existing treatment plant facilities during a 14-day transition period prior to the start date of the initiation of formal O&M service period. The Contractor will be on-site with the existing treatment operating contractor, CH2M HILL and their subcontractor OMI, during the transition period. Contractor shall have the Contract Manager and the operations supervisors on site during the period to obtain the necessary training on the existing treatment plant facility. All such Contractor expenses related to the transition period shall be included under Item 0001 of the Schedule.

1.3 PROJECT O&M RESPONSIBILITIES

1.3.1 Initiation of Project O&M Services

The initiation of Contractor's services will commence upon successful completion of training as deemed satisfactory by the Contracting Officer. As a minimum, the Contractor shall demonstrate treatment system familiarization to include: the physical location of all treatment system extraction wells and pump operations, liquid treatment plant system performance and maintenance records, utility systems, and treatment plant operation and all accompanying operations. The Contractor shall be thoroughly knowledgeable in the treatment system operation (startup, shutdown, media filter backwash and carbon change-out requirements) before assuming responsibility for the operation and maintenance of the treatment systems.

1.3.2 Description of O&M Services

The Contractor shall have full responsibility for all on-site operations which shall include but not is necessarily limited to the following activities:

- Operate and maintain all associated systems for the Treatment Plant and its ancillary systems,
- Monitor the progress of the groundwater contaminants of concern (COC) through groundwater monitoring and sampling;
- Submit monthly, quarterly and annual reports detailing the results of the quarterly groundwater monitoring, groundwater elevation measurements, amount of product removal, and performance of the treatment system;
- Perform treatment of contaminated groundwater collected by the extraction system as required in the specifications for the contract duration;
- Perform testing during extraction and treatment to ensure the completeness and adequacy of contaminant removal and groundwater treatment process in accordance with specifications;
- Provide for equipment and material holding and staging areas, and decontamination facilities for vehicles, equipment and personnel required to handle and transport products and spent GAC and other waste stream components;
- Transport and dispose of spent GAC and other collected wastes.
- Submit a Final Field Report, after completion of contract period.

1.3.3 Demobilization of Services and Transition to Follow-On Contractor

1.3.3.1 Demobilization upon completion of the contract as follows:

- Decontaminate and remove from site all Contractor-owned equipment and facilities;
- Dispose of all wastes generated during the contract period that cannot be properly treated and disposed on site at an approved off-site TSD facility;
- Submit Project Closeout Submittals, including Field Report.
- Demobilize the Contractor office trailer from the site including disconnecting the utilities (water, sewer, power, and telephone).

1.3.3.2 Changeover Transition Period to Follow-On Contractor

At the option of the Government and to ensure continuity of essential services, the Contractor shall have the Contract Manager and operations supervisors on site for a period of two weeks after the completion of this contract for orientation of subsequent contractor employees. The Contractor expenses for this period will be included as Option Item 0007 under the schedule and will be applicable only once to be made at the end of the contract period, including any extensions.

PART 2 - PRODUCTS NOT USED

PART 3 - EXECUTION NOT USED

END OF SECTION

SECTION 01140

SUPPLEMENTARY REQUIREMENTS

PART 1 GENERAL

1.1 PRE-TRANSITION CONFERENCE

1.1.1 Within five working days after Notice to Proceed, and prior to beginning of the transition period of the Contractor to the project site, the Contractor shall meet with the Contracting Officer (CO) or a representative for the Pre-Transition Conference. CONTRACTOR shall be prepared to discuss the following subjects, as a minimum:

(a) RAMP Requirements.
(b) Project changes and clarification procedures.
(c) Use of site, access, office, and storage areas, security and temporary facilities.
(d) Major priorities.
(e) Interface and coordination with existing on-site treatment plant contractor.
(f) CONTRACTOR's safety plan and representative.

1.1.2 The Pre-Transition Conference will be held at the project site. The Contractor will be given at least 72 hours advance notice of the specific date and time of the conference by the Contracting Officer.

1.1.3 During the conference, the Contractor will be given a tour of the project site by the Contracting Officer or COR. Major site features will be noted.

1.1.4 Attendees will include but not be limited to:

CONTRACTING OFFICER or representatives
CORPS OF ENGINEERS site manager
CORPS OF ENGINEERS project manager
EPA's project manager
CONTRACTOR's Contract Manager
CONTRACTOR's lead operator
CONTRACTOR's quality control representative
CONTRACTOR's safety manager or representative.

Subcontractors' representatives whom CONTRACTOR may desire or CONTRACTING OFFICER may request to attend.

Others as appropriate.

1.2 CORRESPONDENCE

1.2.1 All correspondence shall be addressed to the Contracting Officer, shall be serially numbered commencing with Number 1, with no numbers missing or duplicated and shall be forwarded in an original and one copy. All copies provided shall be legible. Enclosures attached or transmitted with the

correspondence shall also be furnished with the original and copy. Each serial letter shall make reference to the contract name, contract number and shall have only one subject.

1.2.2 For submission of Contractor payment requests, See Section 01270, MEASUREMENT AND PAYMENT.

1.3 CONTRACTOR'S FILES

Contractor shall maintain "Approved (Action Code "A") and "Approved Except as Noted (Action Code "B") submittals at the project site for government use.

1.4 SPECIAL SAFETY REQUIREMENTS

In addition to Safety and Health Requirements Manual EM 385-1-1, dated 3 September 1996, the Contractor shall comply with the requirements listed below. Paragraph numbers refer to EM 385-1-1 or are added thereto.

(a) Paragraph 01.A.12: Add new paragraph: Safety Personnel. The Contractor shall designate a person on his staff to manage the Contractor's safety and accident prevention program. This person will provide a point of contact for the Contracting Officer on matters of job safety, and shall be responsible for ensuring the health and safety of on site personnel.

(b) Paragraph 01.D.02, revise as follows:

(1) Replace paragraph 01.D.02c with the following:
"c. Property damage in excess of $2,000.00."

(2) Add new paragraph d as follows:
"An injury resulting in a lost workday, not including the day of injury."

1.5 QUALITY ASSURANCE-SERVICES WORK

1.5.1 In accordance with the "Inspection of Services" clause, the Government shall evaluate the Contractor's performance under the O&M services phase of the contract. Government surveillance of tasks may occur during the O&M performance period of the contract. Such surveillance shall be done according to standard inspection procedures or other contract provisions. Any action taken by the Contracting Officer as a result of surveillance, shall be according to the terms of the contract.

1.5.2 Performance Evaluation Meetings. The Contract Manager may be required to meet at least weekly with the Contracting Officer and/or Contract Administrator and the COR during the first month of the O&M services phases of the contract. Meetings shall be as often as necessary thereafter as determined by the Contracting Officer but not less than monthly. The Contractor may request a meeting with the Contracting Officer when he or she believes such a meeting is necessary. At these meetings the Contracting Officer will apprise the Contractor of how the Government views the Contractor's performance and the Contractor will apprise the Government of problems, if any, being experienced. The Contractor will also notify the Contracting Officer (in writing) of work being performed, if any, that the Contractor considers over and above the requirements of the contract. Appropriate action shall be taken to resolve outstanding issues. The written minutes of these meetings shall be signed by the Contract Manager and Contracting Officer or Contract Administrator. Should the Contractor not concur with the

minutes, the Contractor shall so state any areas of nonconcurrence in writing to the Contracting Officer within ten (10) calendar days of receipt of the signed minutes.

1.6 COMPLIANCE WITH APPLICABLE FEDERAL, STATE, AND LOCAL REQUIREMENTS.

In performing work under this contract, the Contractor shall comply with all relevant Federal, state and local statutes, ordinances, laws and regulations.

1.7 RESPONSIBILITIES FOR WORK.

The Contractor shall be responsible for all damages to persons or property that occur as a result of its fault or negligence in connection with the prosecution of the work.

PARTS 2 AND 3 NOT USED

END OF SECTION

This page intentionally blank.

SECTION 01145

SITE SPECIFIC SUPPLEMENTARY REQUIREMENTS

PART 1 GENERAL

1.1 VEHICLES

1.1.1 The Contractor shall provide and maintain all vehicles necessary to perform the requirements of the contract. Contractor vehicles shall have the company name prominently displayed on the side of the vehicle and be maintained clean to present a neat, professional appearance.

1.1.2 All vehicles used in the performance of the contract shall be in operable condition and meet the local, state, and Federal safety requirements. Vehicles found to be unsafe and unable to function as designed, shall be removed from the site and replaced at Contractor expense. Vehicular repairs shall not be done on-site. The Contracting Officer may inspect the Contractor's vehicles at any time and direct the removal of any unsafe or objectionable vehicle from the project.

1.1.3 All vehicles shall be registered, licensed, insured, and operated in accordance with state and local traffic regulations by a licensed driver.

1.2 COORDINATION AND COOPERATION WITH OTHER CONTRACTORS

Coordination with other on-site contractors shall be made through the Contracting Officer to assist the Contractor to perform the work with a minimum of interference and inconvenience. Under no circumstances shall additional work be performed at the request of another contractor without approval of the Contracting Officer. See 01110, SUMMARY OF WORK for list of other potential contractors who may also be on site.

1.3 GOVERNMENT WORK HOURS

Government work hours during the operation of the treatment plant will generally parallel the normal daily on-site shift of the Contractor, usually 7:30 a.m. to 4:30 p.m., Monday through Friday, except holidays.

1.4 HOURS OF OPERATION

1.4.1 Contractor Responsibility

The Contractor is responsible for all Treatment Plant facilities operation and maintenance activities 24 hours per day, 7 days-per week. Contract Manager or alternate(s) shall be continuously available for communications via telephone, cellular telephone, or pager. If operation of the treatment plant require staffing outside of normal hours to ensure compliance with the requirements of the contract, such operations shall be provided by the Contractor at no additional cost to the Government. The Contractor shall make provisions for responding to and executing emergency mechanical repairs that occur outside of normal hours. Excess noise must be kept at a minimum during the hours of 5:00 p.m. and 8:00 a.m. Between the hours of 10:00 p.m. and 7:00 a.m., noise levels must be in compliance with WAC 173-60-040.

1.4.2 Normal Contractor Work Hours

The Contractor shall establish a regular work day and hour schedule for on-site activities similar to 7:30 a.m. through 4:30 p.m. The amount of on-site work performed shall be determined by the Contractor. However, the Contractor must establish a work day and hour schedule that allows for all activities necessary to meet the requirements of the specifications for performing the various features of work.

1.4.3 Holidays

The Contractor shall not have in excess of the 10 Federal holidays per year. The Contractor's holidays do not necessarily have to coincide with the 10 Federal holidays, although the Contractor shall indicate the holiday schedule to be used during the contract term. The Contractor shall not be excused from operating the plant on any Federal holiday. Any additional costs associated with performing work on a Federal holiday shall be included. The Federal holidays are: New Year's Day, Dr. Martin Luther King Day, Presidents' Day, Memorial Day, Independence Day, Labor Day, Columbus Day, Veterans' Day, Thanksgiving, and Christmas. Note: any of the above holidays falling on a Saturday will be observed on the preceding Friday. Holidays falling on a Sunday will be observed on the following Monday.

1.5 STAFFING

1.5.1 Work Schedules

The proposed normal work schedules of on-site and off-site personnel including on-call personnel, shall be submitted for Contracting Officer review. The work schedules shall be updated periodically whenever changes occur.

1.5.1.1 On-Site Staff

The Contractor shall provide sufficiently trained, on-site staff to provide primary operation and maintenance labor for the Treatment Plant. Sufficient personnel shall be trained and available as operators so that any absences by the primary operator will be covered, regardless of the reason for the absence. The system operator shall be the primary person responsible for the proper operation and maintenance of the Treatment Plant. The Contractor shall supply a minimum of three trained operators available to meet the requirements of this contract.

1.5.1.1.1 For activities that present potential hazards, such as heavy equipment or electrical hazard repair, the Contractor shall utilize two or more workers on-site. For each initial response to a trouble call regardless of time, a single worker is assumed appropriate for classification purposes unless otherwise directed.

1.5.2 Phased Staffing Plan.

In addition to the general staffing and organization plans required under Section 01430 CONTRACTOR QUALIFICATIONS, the Contractor shall provide the Government with a phased staffing plan, displaying the mobilization of all personnel under contract. The phased staffing plan shall show the breakdown between manual and non-manual personnel as applicable.

1.5.2.1 The Contractor shall submit, monthly, or at a longer interval as approved by the Contracting Officer, its phased staffing plan reflecting the current structure of its organization down through superintendent level, together with any changes in the said structure projected within the succeeding 45-day period. The required charts shall identify each position by title, grade, and incumbent. Any projected changes in the Contractor's organization which is reported in accordance with this paragraph may be implemented unless disapproved by the Contracting Officer within seven (7) days of receipt.

1.5.3 On-Site Response Time

1.5.3.1 Response time and requirements for "service/trouble" call work is specified under Section 01830 TREATMENT PLANT OPERATION AND MAINTENANCE. Also refer to Section H2, Paragraph H2.5, "Maintenance and Repair Cost Limitation" for Contractor cost liability for resulting work.

1.5.3.2 In addition, the Contractor shall ensure that the Contract Manager or an operator, subject to the Contracting Officer's determination, is available to meet with the COR or his designee Monday through Friday from 1200 to 1500 with 60 minutes advance notice, to answer questions, provide documents and information, and perform other requirements discussed in the specifications. After normal duty hours or weekends, the Contract Manager or designated alternate(s) shall be physically present within 90 minutes after the Government personnel's first communication with the Contractor. These general meetings with Government inspectors or representatives, inspections and occasional site visits by others are not to be considered a "service/trouble" call and therefor are not subject to the requirements of Section H2, Paragraph H2.5. The Contractor is responsible for these general meetings under the firm fixed-price portion of the contract.

1.5.4 Existing Water Treatment Plant

The existing treatment plant operates 24 hours per day, 7 days-per week. For information only, the current on-site staffing is 7 days a week, 7:30 a.m. – 4:30 p.m. The typical on-site staff is generally two operators Monday through Friday and one operator on weekends. The Contractor is responsible to determine and provide the staff as required to satisfactorily perform all functions related to operation and maintenance of the Treatment Plant as specified by these contract documents.

1.6 GOVERNMENT ACCESS REQUIREMENTS

The Treatment Plant shall be accessible to the COR (or his designee) without notice and at all times. Other government and state employees, including EPA, shall coordinate site visits through the COR, who will, in turn, contact the Treatment Plant operator to announce a site visit 60 minutes prior to the visit.

1.6.1 Accommodation of Guests. The Contractor shall assist and cooperate as needed in routine facility inspections and studies, and shall provide for the general accommodation of all guests of the Contracting Officer at the treatment facilities. General accommodation of such guests includes, but is not limited to, guided tours of the facility by knowledgeable contractor personnel, description of process and control data, etc. Such guests may include, for example, representatives of other local and state environmental agencies, and the Environmental Protection Agency. An activity representative may be appointed by the Contracting Officer to act as a liaison in the case of such Visits.

1.6.2 Contractor Changeover. The Government reserves the right to conduct site visits in all Contractor-operated facilities in conjunction with the solicitation of offers for any subsequent follow-on contract. In the event the follow-on contract is awarded to other than the incumbent, the incumbent

Contractor shall cooperate to the extent required to permit an orderly changeover to the successor contractor. With regard to the successor contractor's access to incumbent employees, a recruitment notice may be placed in each facility.

1.7 GENERAL ACCESS REQUIREMENTS AND SECURITY

1.7.1 Contractor's Vehicles

Vehicle access into the site will be controlled by a locked gate during working and non-working hours. Only Contractor vehicles and equipment required to perform the work shall be allowed to enter the designated project areas. The Government will provide keys or a combination to open the gate in accordance with Paragraph 1.7.4.

1.7.2 Contractor Employee Privately-Owned Vehicles

The parking of privately-owned vehicles (POV's) of Contractor personnel is prohibited within the project site. Contractor personnel shall park their POV's within the designated area on the site drawings and enter the site through the personnel gate. The Contractor shall provide signage indicating their designated parking locations at the entrance to the area. The Contractor may prepare additional parking spaces at its cost, with the plan subject to the approval of the COR.

1.7.3 The Contractor shall be responsible for securing all Government property provided for Contractor's use. At the end of each day, Government facilities, materials, and equipment shall be secured.

1.7.4 Key Control. The Government shall provide the Contractor with keys to the site at the Pre-Construction meeting. The Contractor shall not duplicate any keys issued by the Government. The Contractor shall establish and implement methods of ensuring that all keys are continuously accounted for and are not used by unauthorized persons. The Contractor shall develop procedures covering key control and shall include such procedures in the Quality Control Plan.

1.7.4.1 The Contractor shall immediately report to the QAE or Contracting Officer any occurrences of lost or duplicated keys.

1.7.4.2 In the event keys, other than master keys, are lost or duplicated, the Contractor may be required upon written direction of the Contracting Officer, to rekey or replace the affected lock or locks without cost to the Government. The Government may, however, at its option, replace the affected lock or locks or perform rekeying and deduct the cost of such from the monthly payment due to the Contractor. In the event a master key is lost or duplicated, all locks and Keys for that system shall be replaced by the Government and the total cost deducted from the monthly payment due the Contractor.

1.7.4.3 Upon completion of the work in an area, or upon request of the Contracting Officer, the key or keys relevant to the completed areas shall be returned.

1.7.4.4 Should the Contractor lose a key:

a. the Contracting Officer shall be notified, in writing, within three (3) working days after the loss is discovered and
b. should the key not be found before final acceptance, the final contract payment shall be reduced by $100 for each key not returned.

1.7.5 Off-Site Traffic Control

No heavy equipment or hauling trucks shall use the state ferry system.

1.7.6 Personnel Entry Procedures

Refer to Section 01351 SAFETY, HEALTH, AND EMERGENCY RESPONSE (HTRW/UST) for entry procedures.

1.8 CONTRACTOR SECURITY

The Government will not be responsible for providing specific on-site security for Contractor-owned or controlled equipment, supplies, tools, or materials. The Contractor shall provide its own security measures as necessary.

1.9 PROTECTION OF GOVERNMENT PROPERTY

In addition to requirements of the CONTRACT CLAUSES, Contractor shall protect all Government property in which it is working, except for such property as is required to be demolished. Protection shall include, but not be limited to, protection from work or operational generated dust, debris, water, and vibration and maintenance of security measures to prevent unauthorized access to Treatment Plant facilities. Property damaged shall be repaired by the Contractor within 24 hours. The Government will arrange repair of items not repaired in this time period and shall bill the Contractor for the repair costs. Equipment damaged by the Contractor shall be repaired immediately.

1.10 AVAILABILITY AND CONSERVATION OF UTILITIES

1.10.1 Availability of water and electricity for use by the Contractor is specified in Section 01501 TEMPORARY FACILITIES AND CONTROLS and Section 01150 GOVERNMENT FURNISHED PROPERTY, SERVICES, AND UTILITIES.

1.10.2 The Contractor shall instruct employees in utilities conservation practices. The Contractor shall be responsible for operating under conditions which preclude the waste of utilities.

1.11 STORAGE

1.11.1 The Contractor shall store all equipment and supplies in areas approved by the Government. The Contractor shall comply with the requirements specified in Section 01351 for storage of hazardous materials, generation of hazardous wastes, and spill response.

1.11.2 Paint Storage Facilities. If flammable paints, thinners, and other flammable materials are stored on-site, the Contractor shall store such materials in Contractor-supplied NFPA approved flammable storage cabinet(s) and shall comply with the requirements specified in Section 01351.

1.12 CONTRACTOR CLEANUP

The Contractor shall, at all times, keep work areas clean and free from accumulations of waste material, screenings, refuse, tools, equipment, and materials.

1.13 EXITING THE SITE

In addition to the requirement to decontaminate immediately after leaving the exclusion zone(s) as defined by the Contractor's Site Safety and Health Plan (reference 01351 SAFETY, HEALTH AND EMERGENCY RESPONSE), all personnel, vehicles, and equipment shall be decontaminated prior to leaving the site as specified in 01351. Personnel shall decontaminate in the decontamination trailer provided by the Contractor in the trailer park area and vehicles and equipment shall decontaminate on the decontamination pad. The Contractor shall perform a primary rinse of heavily soiled equipment prior to using the decontamination pad as specified in 01351. Engineering controls shall be used to minimize the off-site migration of contaminants from personnel and vehicles leaving the western portion of the site via Taylor Avenue.

PARTS 2 and 3 NOT USED

END OF SECTION

SECTION 01150

GOVERNMENT FURNISHED PROPERTY, SERVICES, AND UTILITIES

PART 1 GENERAL

1.1 GENERAL

In accordance with the "GOVERNMENT PROPERTY (FIXED-PRICED CONTRACTS)" clause in Section I, the Government will provide the Contractor the use of certain Government owned facilities, equipment, and materials for use only in connection with this contract. The use of Government furnished property and services for other purposes are prohibited. All such facilities, equipment, materials and supplies will be provided in "as is" condition. The availability of Government furnished items and services is identified in this section and in Technical Exhibit 2.

1.2 TEMPORARY FACILITIES

The Contractor shall provide temporary facilities for administrative, office or storage facilities for its own use and for Government use as specified.

1.2.1 Government Furnished Facilities

The Government will not provide office space, laboratory space, and operational facilities (except as described under Technical Exhibit 2, Section 01501 and Drawing plate C1.1) to the Contractor. The Contractor is responsible, at his/her expense, to secure and maintain the necessary office space and other facilities required for the performance and management of this contract.

1.2.2 Contractor Furnished Temporary Facilities

1.2.2.1 Administrative Field Offices

A designated site will be available for the Contractor inside the support zone to provide and maintain administrative field office and storage facilities for Contractor and Government activities within the project area. Utility hook-ups for water, sewer, electricity and phone are available at prescribed locations in the trailer support zone. See Section 01501, TEMPORARY FACILITIES AND CONTROLS.

1.2.2.2 Appearance of Trailers

Trailers utilized by the Contractor or furnished by the Contractor for Government use for administrative or material storage purposes shall present a clean and neat exterior appearance and shall be in a state of good repair. Trailers which, in the opinion of the Contracting Officer, require exterior painting or maintenance will not be allowed on the property.

1.2.2.3 Maintenance of Temporary Facilities

All temporary facilities provided by the Contractor during the contract period, including the Government field office or storage units shall be maintained by the Contractor including space heat, electric light and power, local telephone and toilet facilities, waste pickup and disposal.

1.2.3 Disposition of Temporary Facilities

All storage trailers, office trailers, meters, and excess materials not designated to remain as Government property, and debris shall be removed and the site left in a condition acceptable to the Contracting Officer prior to final contract payment. Demobilization from the site shall be considered an incidental cost and will not be separately priced regardless of when the demobilization occurs.

1.3 GOVERNMENT FURNISHED EQUIPMENT

1.3.1 The Contractor shall furnish all tools and equipment required for the performance of this contract. Government furnished equipment includes all existing equipment at the treatment plant. If at any time the Government has available any tools or equipment for use in the performance of this contract and the Contractor chooses to use all or any item of this equipment then the following shall apply:

1.3.1.1 The Contractor shall be responsible for the periodic servicing, maintenance and repair of the equipment at no cost to the Government, and the total or partial breakdown or failure of the Government furnished equipment shall not relieve the Contractor of the requirement to fully perform the work of the contract. Upon completion or termination of the contract, all Government owned equipment shall be returned to the Government in the same condition as received, except for normal wear and tear. Equipment which becomes worn out due to normal wear and tear shall be returned to the Government and its replacement shall be the responsibility of the Government if it so chooses. Failure of the Government to replace any Government Furnished Equipment or the non-availability of a replacement item shall not relieve the Contractor of responsibility to fully perform the requirements of the contract. The Contractor shall be responsible for the cost of any repairs or replacement caused by negligence or abuse by the Contractor or his/her employees.

1.3.1.2 The Contractor and the Government Representative shall conduct a joint inventory under this contract to determine the exact number and serviceability of any Government furnished equipment. The Contractor shall then certify the findings of this inventory, assume accounting responsibility, and subsequently report inventory discrepancies to the Government Representative. Government furnished equipment shall not be removed from the work site unless approved by the CO in writing.

1.4 GOVERNMENT FURNISHED MATERIAL

1.4.1 The Government will furnish the material described in Technical Exhibit 2 to the Contractor on a one time basis. Should the Contractor choose to use the Government furnished material, a joint inventory shall be conducted with the Contracting Officer before commencing work under this contract to determine the exact amount and serviceability of Government furnished materials. The Contractor shall then certify the findings of this inventory, assume accounting responsibility for all materials supplied, and shall provide documentation supporting issue/use of such material.

1.4.2 On depletion of material provided to the Contractor by the Government, as listed in TE-2, the Contractor shall furnish all material to perform the work of the contract, except as otherwise specified herein. On completion or termination of this contract a second joint inventory shall be conducted, if necessary, of all unused Government furnished materials, as listed in TE-2. The Contractor shall be held liable for all materials missing which cannot be accounted for by issue/use documentation.

1.4.3 The Government may require the Contractor to stock certain selected items of long lead time parts and materials to insure repair of critical equipment in the event of failure. If critical equipment spare items are required the Government will pay the full cost of such items initially acquired by the Contractor. The Contractor shall then maintain at least the minimum quantity of all the items specified. These items shall be used by the Contractor in the maintenance and repair of the facilities/systems only as follows:

(a) Critical reserve items shall be used on the systems or facilities, with which they are associated.

(b) A replacement critical reserve item shall be ordered within three working days after the use of any critical reserve item that causes the total quantity on hand to fall below the minimum specified level. The Contractor shall bear the cost of replacement of all critical reserve items.

(c) On completion or termination of the contract, all critical reserve items shall be returned to the Government in at least the minimum specified quantities.

1.5 SERVICES

The Contractor is responsible under the firm fixed-price portion of the contract for all services not identified as provided by the Government.

1.5.1 Refuse Containers and Collection. No Government service is available. The Contractor shall obtain the services of a waste disposal service for this requirement.

1.5.2 Grounds and Building Maintenance. No Government service is available. General maintenance of the treatment facilities, pilot support facilities, and the site perimeter fence shall be provided by the Contractor. No grounds maintenance of the site will be the responsibility of the Government.

1.5.3 References and Technical Documentation.

1.5.3.1 Additional Data. In addition to the data included in Section J Attachments for the Contractor's use the following items will also be provided, after award of the contract, upon request to the Contracting Officer:

a. Floor plans and related facility and equipment manufacturer's literature, where available.

b. Utility systems drawings will be available for review, where available.

1.5.4 Government-Furnished Forms. Standard forms may be provided by the COR or proposed forms may be submitted by the Contractor for approval.

1.5.5 Insect and Rodent Control. The Contractor shall provide insect and rodent control for all Government-furnished facilities. The Contractor shall notify the COR when an insect or rodent problem is detected.

1.6 UTILITIES

The Contractor is responsible under the firm fixed-price portion of the contract for all utilities services not identified as provided by the Government.

1.6.1 Utilities. No utility services will be furnished by the Government except as specified herein. The Contractor shall obtain all required services from the appropriate utility companies.

1.6.2 Water. See Section 01501 TEMPORARY FACILITIES AND CONTROLS, paragraph, “Availability Of Utility Services.”

1.6.3 Sewer. There are two septic tanks and an on-site drain field which support the trailers in the support zone only. The sewer connections are provided at each hook-up in the trailer support zone. Contractor is responsible for routine maintenance and periodic pumping of the septic tanks during the life of this contract as an incidental cost.

1.6.4 Electrical. See Section 01501 TEMPORARY FACILITIES AND CONTROLS, paragraph, “Availability Of Utility Services.”

1.6.5 Telephone. Telephone hook-ups are available at the trailer support zone. Contractor shall be responsible for all installation and monthly service fees, including for the Government trailers, except the Government will reimburse the Contractor for the costs of all long-distance charges for Government office facilities.

1.7 SUPPLIES

The Contractor is responsible under the firm fixed-price portion of the contract for all supplies not identified as provided by the Government or identified as specific line items.

PART 2 PRODUCTS and PART 3 EXECUTION

Not Used.

END OF SECTION

This page intentionally blank.

SECTION 01240

COST AND PERFORMANCE REPORT

PART 1 GENERAL

1.1 REFERENCES

The publications listed below form a part of this specification to the extent referenced. The publications are referred to in the text by basic designation only.

U.S. ARMY CORPS OF ENGINEERS, ENGINEERING PAMPHLETS (EP)

EP 1110-1-19	(1996) Technical Requirements for Specifications to Report HTRW Environmental Restoration Cost and Performance (CEMP-RT)

This publication is available at the following web address:
http://www.usace.army.mil/inet/usace-docs/eng-pamphlets/ep1110-1-19/toc.htm

U.S. ARMY CORPS OF ENGINEERS, ENGINEERING REGULATIONS (ER)

ER 1110-3-1301	(1994) Cost Engineering Policy Requirements for Hazardous, Toxic Radioactive Waste Remedial Action Cost Estimate

U.S. ENVIRONMENTAL PROTECTION AGENCY (EPA)

EPA 542-B-98-007	(1998) Guide to Documenting and Managing Cost and Performance Information for Remediation Projects
EPA 542-B-94-013	(1994) Remediation Technologies Screening Matrix and Reference Guide

1.2 DESCRIPTION OF WORK

A cost and performance report is a Corps of Engineers requirement for HTRW projects. This work shall consist of recording and providing data to the Government for the preparation of a Government report containing contract-related cost and performance data from the Wyckoff/Eagle Harbor Superfund Site remediation project.

1.2.1 Report Format

The report shall be prepared in accordance with EP 1110-1-19 and EPA 542-B-98-007 and meet all substantive requirements of a Remedial Action Report (EPA Directive 9355.0-39FS). The presentation

requirements of the report shall be: 1) Word processing format: Word 6.0 or 7.0, 12 point font size, typeface, Times New Roman. 2) Page layout: 215 x 280 mm 8-1/2 x 11 inch size paper; 1 inch margins; portrait or landscape orientation; bold headings, footnotes, page numbering. 3) Tables and charts software: spreadsheets, groundwater modeling. 4) Computer file: the document shall also be presented in Hypertext Mark-up Language (HTML 2.0) saved as an ASCII file; postscript drawings shall be linked to document text.

1.2.2 Drawing Format

Drawings shall follow the same format, including software, as that used in the design phase of the project. Drawings shall be in post script format. Since there are only two contract drawings, this requirement shall not be significant.

1.2.3 Quality Control

A quality control plan shall be developed to detail the procedures for preparation of the report and for correction of deficiencies. The Contractor shall arrange for conferences to coordinate the work as needed and as requested by the Contracting Officer. This work shall be a minor requirement.

1.3 SUBMITTALS

Government approval is required for submittals with a "GA" designation; submittals having an "FIO" designation are for information only. The following shall be submitted in accordance with Section 01330 SUBMITTAL OF CONTRACT DATA.

SD-09 Reports

Cost and Performance Reports; GA.

Five copies of the report upon completion of each of the following stages: Outline, Draft Report, and Final Report. The draft report shall be submitted no later than 30 days following completion of O&M contract activities. The report shall be provided to Contracting Officer.

SD-18 Records

Report Format; GA.

ASCII file of report. File shall be provided to Contracting Officer.

PART 2 PRODUCTS (NOT USED)

PART 3 EXECUTION

3.1 REPORT OUTLINE

3.1.1 Treatment System Costs

The Contractor shall use standard descriptions, to document costs for activities directly attributed to the treatment system. Operation and maintenance shall be identified separately. Cost for activities directly attributed to the treatment shall be shown as a total cost and as a calculated cost on a per unit of media treated basis, and on a per unit of contaminant removed basis, as indicated.

3.1.2 HTRW - Remedial Action Work Breakdown Structure

The Contractor shall appropriately allocate invoices for materials, labor, supplies, services, and other costs. These costs shall be allocated to operation and maintenance. These costs shall be allocated to pretreatment, treatment, and post-treatment activities. These cost allocations shall include the sub-breakdown of cost elements. Costs should be further allocated between capital and operating costs.

3.1.2.1 Operations and Maintenance (Costs Directly Associated with Treatment)

The costs directly associated with the treatment shall include solids, liquids, mobilization, spill control, testing, permits, training, and other O&M costs.

3.1.3 Regulatory/Institutional Issues

Approvals, licenses, and permits required for continued O&M services shall be listed along with the direct cost and time lines associated with obtaining them, if any are needed.

3.1.4 Observations And Lessons Learned

3.1.4.1 Cost Observations and Lessons Learned

Observations or lessons learned concerning cost for each treatment system shall be summarized. Key factors that affected project costs, and major items that caused final costs to differ from initial Contractor's bid shall be considered. Issues that are to be discussed shall include change orders, reclarifications, liquidated damages, variations in quantities, and unforeseen conditions. The narrative shall include recommendations for cost savings in future procurements of each treatment technology.

3.1.4.2 Performance Observations and Lessons Learned

Observations or lessons learned concerning performance of each treatment system for this contract shall be summarized. Key factors that caused performance variations from contract requirements/cleanup standards shall be considered. Recommendations for improved performance in future applications shall be discussed.

3.1.4.3 Other Observations and Lessons Learned

Observations or lessons learned from each treatment unit not directly related to cost or performance shall be summarized.

END OF SECTION

SECTION 01250

TASK ORDER PROCEDURES

PART 1 GENERAL

1.1 SUMMARY

The work beyond the firm fixed-price will be treated as indefinite quantity (IQ). The Government will generally issue a task order to perform work not included in the firm fixed-price work and not otherwise scheduled maintenance and repair (M&R) work, or not separately priced on the SCHEDULE (Section B) by task. (Note: a WAD as specified under the Clause H-11 is not anticipated to be required for any work under this contract.) The IQ work items include maintenance frequency exceeding one year unless specifically noted to be performed in a given contract year; repairs exceeding trouble call limits and corrective or minor maintenance limits; Replacement of Obsolete Items (ROI); service request, minor construction and work required on an unscheduled or irregular frequency.

1.2 REQUIREMENTS FOR ESTABLISHMENT OF TASK ORDERS

1.2.1 Contractor Initiated Task Order (T.O.) Proposal(s)

When the Contractor determines a need to perform maintenance and repair work under an IQ work item which is part of the plant for the Treatment Plant the following procedures shall be followed.

1.2.1.1 Task Order (T.O.) Proposal(s)

The Contractor shall submit a Task Order (T.O.) Proposal(s) which shall include the following:

(a) A statement of work describing the work to be performed or item to be purchased which may include an explanation and description of conditions requiring the work, a sequence of work if required, and a set of sketches or drawings to define the basis of work for the order.

(b) Schedule for Task Order execution;

(c) Contractor's proposal including specific item and quantity with non-prepriced items broken out and priced separately. The Contractor shall provide three separate price quotes from different manufacturers/suppliers for each material and equipment item to be supplied. Each quote shall be signed by an authorized representative of the manufacturer/supplier. The Contracting Officer may exempt certain small and usual items from the requirement for obtaining price quotes.

(d) All other submittals and documentation required by the contract documents to indicate that adequate layout, set-up, and planning to accomplish the work have been done.

1.2.2 Government Initiated Task Order (T.O.) Proposal(s)

The Government may issue one or more Task Order (T.O.) Requests for Proposals(s) (RFP) to the Contractor during the period of this Contract for miscellaneous non-recurring work items. When the Government intends to issue an RFP for work under this Contract the Government will notify the Contractor by telephone of its intent to issue a Task order. Within 48 hours of this notice or as indicated by the Contracting Officer, the Government will issue a Request for Proposal.

1.2.2.1 Task Order (T.O.) Request for Proposals(s)

Each Task Order RFP will typically consist of the following:

(a) A statement of work describing the work to be performed which may include special instructions and conditions including sequence of work, and a set of sketches or drawings to define the basis of work for the order.

(b) Schedule for task order preparation and work execution;

(c) The RFP will also indicate the time and date for a joint site visit (scoping meeting). Joint site visits may be accomplished in connection with each task order prior to final agreement to resolve any work requirements or a meeting may be held in person to discuss particulars of the work.

1.2.2.2 Contractor's Proposal

The Contractor shall respond within 14 calendar days after receipt of the Task Order RFP unless otherwise indicated, with a proposal containing the following:

(a) Contractor's proposal including specific item and quantity with non-prepriced items broken out and priced separately. The Contractor shall provide three separate quotes from different manufacturers/suppliers for each material and equipment item to be supplied. Each quote shall be signed by an authorized representative of the manufacturer/supplier.

(b) Strategy for performing task order work;

(c) A completion schedule for the work under the T.O.;

(d) All other submittals and documentation required by the contract documents to indicate that adequate layout, set-up, and planning to accomplish the work have been done.

1.2.3 Government Action

The Government will review the Task Order proposal in accordance with the requirements of the Clause H2.6 Paragraph "Repair and Replacement." The Government may:

(a) Request additional information or data as required to determine the need for the repair or replacement.

(b) The Government may request a time and date for a joint site visit. Joint site visits may be accomplished in connection with a Task order prior to final agreement to resolve any work requirements or a meeting may be held in person to discuss particulars of the work.

1.2.4 Negotiation

The Contracting Officer’s Representative will compare the Contractor's proposed price with the Government Estimate and arrange a date and time for negotiation to determine final price with the Contractor for the Task Order.

1.2.5 Government Approval to Proceed

The Government will respond within 30 calendar days after receipt of the Task Order request with a decision to approve or disapprove the work.

1.2.6 Extent of Services Under Individual Task Order

The price negotiated for an individual Task Order will be a firm fixed price. A modification to the Task Order shall be required for any work exceeding the quantities or when the scope of work is changed. No payment shall be made for work performed by the Contractor in excess of the amounts as awarded in the individual Task Order(s) without a modification to the Task Order being previously negotiated.

1.3 DELIVERIES

(a) Contractor shall commence activities to perform the Task Order after verbal or written notice to proceed for the individual Task Order and in accordance with the approved completion schedule.

(b) The COR shall be notified within 48 hours prior to start of field work. Once started, the Contractor shall work daily (except Saturdays, Sundays, and Federal holidays) unless otherwise approved by the Contracting Officer's Representative (COR) until the Task Order requirements are fulfilled.

(c) All Task Orders shall be completed in strict accordance with the Statement of Work, specifications and sketches/drawings as approved, including any revisions thereto.

1.4 TASK ORDER LIMITATIONS

(a) Minimum Order. A Government initiated Task Order has no minimum price limitation.

PART 2 PRODUCTS (NOT USED)

PART 3 EXECUTION (NOT USED)

END OF SECTION

This page intentionally blank.

SECTION 01270

MEASUREMENT AND PAYMENT

PART 1 GENERAL

1.1 GENERAL INFORMATION

The contract price shall constitute full compensation for furnishing all plant, labor, materials, appurtenances, and incidentals and performing all operations necessary to complete the work in accordance with these specifications and the applicable drawings. Payment shall be considered as full compensation, notwithstanding that minor features may not be mentioned herein. Material and work paid for under one item will not be paid for under any other item. The Contractor will not be compensated for loss of time or equipment due to breakdown of equipment, lack of proper equipment as determined by the Contracting Officer (CO), labor shortage or disputes, or for any other reason not directly the fault of the Government. No payment will be made for any work abandoned by the Contractor or rejected by the CO because of failure to meet specification requirements. Payment for any work that is abandoned at the direction of the CO due to no fault of the Contractor will be as listed in the Unit Price Schedule of the contract for the actual amount of work accomplished. Items of work for which no separate payment is provided shall be considered as incidental to the performance of the work with which it is associated.

1.2 CONTRACT LINE ITEMS - FIXED PRICE

The contract line items listed in Section B are further described as follows:

1.2.1 Item No. 0001 (BASE ITEM): Transition Activities Including all Pre-Mobilization Submittals except Item 0003AA

Payment will be made at the contract lump sum price for Item No. 0001, Transition Activities, Including all Pre-Mobilization Submittals except Item 0003AA, payment of which shall constitute full compensation for Item No. 0001, complete. This price shall include, but not be limited to transition plans, and transition coordination activities and initial training period and site mobilization.

1.2.2 Item No. 0002 (BASE ITEM): Treatment Plant Operations and Maintenance

1.2.2.1 Item No. 0002AA: Operations and General Maintenance

1.2.2.1.1 Payment

Payment will be made at the contract unit price for the Item 0002AA, “Operations and General Maintenance” for Treatment Plant services. This price shall include, but not be limited to associated contract data required for each contract month, contract management and operating personnel, operation of water treatment facilities, plant custodial and housekeeping and associated supplies, groundskeeping and refuse disposal, transportation, service/trouble calls within the defined cost limitation (see clause H2.5), analytical testing except as listed in the Schedule, and monitoring and includes all tools and

equipment, transportation, storage, required records and reports covered in the specifications attached to this contract and all other recurring work requirements covered in the specifications, exhibits thereto, and other attachments and reference standards and documents attached to this contract, except for Government performed work, required for operation of existing and modified (if any) water treatment plant systems during the contract period.

1.2.2.1.2 Measurement

Monthly.

1.2.2.2 Item No. 0002AB Preventative Maintenance Program

1.2.2.2.1 Payment:

Payment will be made at the contract unit price for the Item, "Preventative Maintenance Program" (See H2.5 for Contractor's Cost Limitation). This work includes all preventative maintenance work and associated corrective maintenance work including tools and equipment, transportation, storage, required records and reports covered in the specifications attached to this contract, and all other work associated with each month of water treatment plant operations during the contract period. Contractor is responsible to perform all maintenance work items for the treatment plant regardless of the overall cost, in accordance with the contract documents, or as directed by the Contracting Officer. Any maintenance requirement which is beyond the scope of preventative maintenance shall be performed under the provisions for a task order, WAD or modification to the contract, as determined by the Contracting Officer in accordance with the CONTRACT CLAUSES, SPECIAL CONTRACT REQUIREMENTS and other applicable sections of the contract documents

1.2.2.2.2 Measurement

Monthly.

1.2.3 Item No. 0003 (BASE ITEM): Contract Data

1.2.3.1 Item No. 0003AA - Management Plan

Payment will be made at the contract lump sum price for Item No. 0003AA, "Management Plan" as Specified in Section 01401 MANAGEMENT PLAN AND FIELD REPORTS, from Preparation to Final Approval, payment of which shall constitute full compensation for Item No. 0003AA, complete. No partial or total payment will be made for this item until the Management Plan is fully approved by the Government.

1.2.3.2 Item No. 0003AB - All Data During O&M Services Except for 0003AC

No separate payment will be made for contract data during any operations and maintenance phase except for the work identified under Item 0003AC. Payment for all contract data except for the work identified under Item 0003AC shall be included in the contract unit or lump sum prices for the Schedule Items to which the work pertains.

1.2.3.3 Item No. 0003AC - Final Field Report

Payment will be made at the contract lump sum price for Item No. 0003AC, "Final Field Report" as Specified in Section 01401 MANAGEMENT PLAN AND FIELD REPORTS, from Preparation to Final Approval, payment of which shall constitute full compensation for Item No. 0003AC, complete. No partial or total payment will be made for this item until the Final Field Report is fully approved by the Government.

1.2.4 Item No. 0004 (OPTIONAL ITEM): Treatment Plant Operations and Maintenance – Additional Monthly Periods

1.2.4.1 Item No. 0004AA/0004AC: Operations and General Maintenance

1.2.4.1.1 Payment

Payment will be made at the contract unit prices for the Items 0004AA/0004AC, "Operations and General Maintenance" for each additional month of Treatment Plant services. This price shall include, but not be limited to associated contract data required for each contract month, contract management and operating personnel, operation of water treatment facilities, plant custodial and housekeeping and associated supplies, groundskeeping and refuse disposal, transportation, service/trouble calls within the defined cost limitation (see clause H2.5), analytical testing except as listed in the Schedule, and monitoring and includes all tools and equipment, transportation, storage, required records and reports covered in the specifications attached to this contract and all other recurring work requirements covered in the specifications, exhibits thereto, and other attachments and reference standards and documents attached to this contract, except for Government performed work, required for operation of existing and modified (if any) water treatment plant systems during the contract period.

1.2.4.1.2 Measurement

Monthly.

1.2.4.2 Item No. 0004AB/0004AD Preventative Maintenance Program

1.2.4.2.1 Payment:

Payment will be made at the contract unit prices for the Items 0004AB/0004AD, "Preventative Maintenance Program" (See H2.5 for Contractor's Cost Limitation). This work includes all preventative maintenance work and associated corrective maintenance work including tools and equipment, transportation, storage, required records and reports covered in the specifications attached to this contract, and all other work associated with each month of water treatment plant operations during the additional monthly contract periods. Contractor is responsible to perform all maintenance work items for the treatment plant regardless of the overall cost, in accordance with the contract documents, or as directed by the Contracting Officer. Any maintenance requirement which is beyond the scope of preventative maintenance shall be performed under the provisions for a task order, WAD or modification to the

contract, as determined by the Contracting Officer in accordance with the CONTRACT CLAUSES, SPECIAL CONTRACT REQUIREMENTS and other applicable sections of the contract documents

1.2.4.2.2 Measurement

Monthly.

1.2.5 ITEM 0005 (OPTIONAL ITEM): All Work for Granular Activated Carbon Change-out and Replacement with Carbon as Specified

1.2.5.1 Payment.

Payment will be made at the contract unit price for Item No. 0005, "All Work For Granular Activated Carbon Changeout and Replacement with Carbon as Specified," payment of which shall constitute full compensation for Item No. 0005, complete, including carbon removal, sampling, analysis, transport, disposal via landfill, and replacement at the treatment vessel.

1.2.5.2.2 Measurement

Each carbon changeout required for a single operating GAC vessel.

1.2.6 Item 0006 (OPTIONAL ITEM): All Work for Granular Activated Carbon Change-out as F032/F034 Listed Waste and Replacement with Carbon as Specified

1.2.6.1 Payment

Payment will be made at the contract unit price for Item No. 0006, "All Work for Granular Activated Carbon Change-out as F032/F034 Listed Waste and Replacement with Carbon as Specified," payment of which shall constitute full compensation for Item No. 0006 complete, including carbon removal, sampling, analysis, manifesting, transport, appropriate disposal via incineration, and replacement at the treatment vessel.

1.2.6.2 Measurement

Each carbon changeout required for a single operating GAC vessel.

1.2.7 Item 0007 (OPTIONAL ITEM): 14 Calendar Day Changeover Transition Period to Follow-on Contractor. Applies at end of final Contract Period

Payment will be made at the contract lump sum price for Item No. 0007, "14 Calendar Day Changeover Transition Period to Follow-on Contractor. Applies at end of final Contract Period," payment of which shall constitute full compensation for Item No. 0007, complete. This item provides for the Contractor to maintain on-site services and coordination to the follow on contractor during a transition period.

1.2.8 Item 0008 (Optional Item): Hazardous Waste Disposal (Incineration)

Payment will be made at the contract unit prices for the subitems under Item No. 0008, Hazardous Waste Disposal (Incineration), payment of which shall constitute full compensation for the sub-Items under Item No. 0008, complete. The contract price is for all costs to handle and the off-site deposal of affected materials under the following subitems.

1.2.8.1 SubItems 0008AA/0008AB, Non-NAPL Payment for "Non-NAPL" hazardous waste will be made under this item for disposal of tank solids and sediments, sludges; filter media; PPE and other creosote contaminated non-NAPL hazardous waste. Measurement shall be by the pound of material accepted at the disposal site. All material to be removed from the site and paid for under this item shall be jointly inspected by the COR and the Contractor prior to placement in the hauling vehicle and the estimated quantity recorded including number of containers, size of containers, and estimated payment quantity.

1.2.8.2 SubItems 0008AC/0008AD, Non-Aqueous Phase Liquid (NAPL)

Payment for "NAPL " hazardous waste will be made under this item. Measurement shall be by the gallon of material accepted at the disposal site. All material to be removed from the site and paid for under this item shall be jointly inspected by the COR and the Contractor prior to placement in the hauling vehicle and the estimated quantity recorded including number of containers, size of containers, and estimated payment quantity.

1.3 CONTRACT LINE ITEMS - INDEFINITE QUANTITY WORK

1.3.1 Item 0009, Indefinite Quantity Work –Labor (Service Wages):

Each subitem 0009AA through 0009AG includes direct and indirect costs as defined for "Labor Hour Unit Price" in Section 01100 DEFINITIONS AND TERMS for one performance standard hour of work-in-place. This includes work issued by a Task Order(s), WAD or modification as defined in the contract documents for work exceeding the Contractor's costs limitation for labor. See the clause H2.5 Maintenance and Repair Cost Limitation. The Subitem 0009AH will be negotiated as required for any other labor groups not identified in subitems 0009AA through 0009AG.

1.3.2 Item 0010, Indefinite Quantity Work – Materials Allowance And Spare Parts

This item covers materials required exceeding the Contractor's costs limitation or spare parts to be issued by WAD, Task Order(s) or other modification as defined in the contract documents for materials costs. See the clause H2.5 Maintenance and Repair Cost Limitation. The total "not to exceed" amount cannot be exceeded without a modification to the contract. Payment for materials costs will be the "Direct Materials Costs" defined in Section 01100 DEFINITIONS AND TERMS.

1.4 PAYMENT INVOICE

1.4.1 Payment Estimate Eng Forms 93/93a

All contract payment requests during the O&M phases will be submitted to EPA on a “PAYMENT ESTIMATE ENG FORM 93.”

1.4.2.1 When submitting payment requests, the Contractor shall complete Blocks 1 through 15 of the " PAYMENT ESTIMATE ENG Form 93 as directed by the Contracting Officer. (A sample form is attached at the end of this Technical Specification Section.) Eng Form 93a is a continuation form and a copy will be provided to the Contractor after award of the contract. .

1.4.2.2 One additional copy of the entire request for payment, to include the "PROGRESS PAYMENT INVOICE" cover document, shall be forwarded to a separate address as designated by the Contracting Officer.

PARTS 2 and 3 NOT USED

PAYMENT ESTIMATE - CONTRACT PERFORMANCE For use of this form, see ER 37-2-10 and 37-345-10.			1. DATE		SHEET ___ of ___
2. CONTRACTOR AND ADDRESS		3. CONTRACT NO.		4. DISTRICT	
5. DESCRIPTION OF WORK		6. APPROPRIATION AND PROJECT		7. REQUIRED COMPLETION DATE	
8. LOCATION		9. PERIOD COVERED BY THIS ESTIMATE FROM THRU		10. JOB ORDER NO.	11. ESTIMATE NO.

ITEM NO. a	DESCRIPTION b	CONTRACT QUANTITY AND UNIT c	CONTRACT UNIT PRICE d	CONTRACT AMOUNT e	TOTAL TO DATE QUANTITY AND UNIT f	TOTAL TO DATE AMOUNT g
INCLUDES MODIFICATION THRU:			TOTAL CONTRACT →	$	TOTAL EARNINGS TO DATE →	$

12. PRESENTED FOR PAYMENT	
PAYEE	PER
DATE	TITLE

13. APPROVED FOR PAYMENT		
I CERTIFY that I have checked the quantities covered by this bill or estimate; that the work was actually performed; that the quantities are correct and consistent with all previous computations as actually checked; that the quantities and amounts are wholly consistent with the requirements of the contract or other instrument involved.		
SIGNATURE	TITLE	DATE
CONTRACTING OFFICER APPROVAL (Signature)		DATE

14.		
A. PREVIOUS DEDUCTIONS OTHER THAN RETAINED PERCENTAGE**		
B. PREVIOUS RETAINED PERCENTAGE		
C. PREVIOUS PAYMENTS		
D. PREVIOUS EARNINGS (A + B + C)		
E. EARNINGS THIS PERIOD (TOTAL EARNINGS TO DATE MINUS D)		
F. LESS RETAINED PERCENTAGE		
G. LESS DEDUCTION OTHER THAN RETAINED PERCENTAGE FOR		
H. TOTAL DEDUCTIONS FOR THIS PERIOD (F + G)		
I. RETAINAGE REFUNDED		
J. OTHER REFUNDS		
K. TOTAL REFUNDS THIS PERIOD		
L. AMOUNT DUE CONTRACTOR (E - H + K)		

15. RECAPITULATION:

TOTAL RETAINED PCTG. (B + F - I) TOTAL PAID (C + L)

ENG FORM 1 MAR 78 93 PREVIOUS EDITION OF THIS FORM IS OBSOLETE. **(USE REVERSE SIDE FOR DETAILED EXPLANATION AND/OR REMARKS)

This page intentionally blank.

SECTION 01330

SUBMITTAL OF CONTRACT DATA

PART 1 GENERAL

1.1 SUMMARY

This section covers all submittals presented by the Contractor for review and approval or for information under the contract.

1.2 IDENTIFICATION OF SUBMITTALS

Throughout these specifications submittals may be identified with the prefix "SD" (submittal description) followed by a number (category, i.e., data, drawings, reports, etc.). This is for bookkeeping and record sorting in the system:

SD-01 Data

SD-04 Drawings

SD-06 Instructions

SD-07 Schedules

SD-08 Statements

SD-09 Reports

SD-13 Certificates

SD-14 Samples

SD-18 Records

1.3 CONTRACT DATA REQUIREMENTS LIST

The Contractor shall submit the items listed on the DD Form 1423, Contract Data Requirements List (CDRL) included as an attachment under Section J ATTACHMENTS. Submittals required in the CONTRACT CLAUSES, SPECIAL CONTRACT REQUIREMENTS and other non-technical parts of the contract are in addition to those listed. In addition, whenever major items of equipment are replaced or repaired, the Contracting Officer may require submittals conforming to the requirements of this Section.

1.4 CLASSIFICATION OF SUBMITTALS

Submittals will be classified as follows:

- Government Approved (G)

Government approval is required for extensions of design, critical materials, variations/deviations, an "or equal" decision, equipment whose compatibility with the entire system must be checked, architectural items such as Color Charts/Patterns/Textures, and other items as designated by the COR.

- For Information Only

Submittals not requiring Government approval will be for information only. These may include items such as Installation Procedures, Certificates of compliance, Samples, Qualifications, etc.

1.5 FORMAT FOR SUBMITTALS

1.5.1 Transmittal Form

Transmit submittals with transmittal form prescribed by Contracting Officer. The transmittal form shall identify contractor, indicate date of submittal, and include information prescribed by transmittal form and required in paragraph entitled "Identifying Submittals."

1.5.2 Drawings

Each drawing shall be not more than 28 inches high by 40 inches wide, with a title block in lower right hand corner and a 3 by 4 inch clear area adjacent. The title block shall contain the subcontractor's or fabricator's name, contract number, description of item(s), bid item number, and a revision block. Provide a blank margin of 3/4 inch at bottom, 2 inches at left, and 1/2 inch at top and right. Where drawings are submitted for assemblies of more than one piece of equipment or systems of components dependent on each other for compatible characteristics, complete information shall be submitted on all such related components at the same time. The Contractor shall ensure that information is complete and that sequence of drawing submittal is such that all information is available for reviewing each drawing. Drawings for all items and equipment, of special manufacture or fabrication, shall consist of complete assembly and detail drawings. All revisions after initial submittal shall be shown by number, date, and subject in revision block.

1.5.2.1 Submittals Containing Drawings Larger than 11 inch by 17 inch

For Government-approval submittals containing drawings larger than 11 inch by 17 inch, one reproducible and one blue line copy will be required to be submitted with five copies of the ENG Form 4025. The marked-up reproducible (and/or any review comments contained on the page-size comment sheet(s) at the Government's option) will be returned to the Contractor upon review. The Contractor shall provide three copies of blue line drawings (generated from the reviewed reproducible) to the Government within 10 days of Contractor's receipt of the reviewed reproducible. The Contractor shall not incorporate approved work into the project until the Government has received the three blue line copies. The Contractor shall use the

marked-up reproducible to make any additional copies as needed. For information-only submittals, one reproducible and two blue line copies shall be submitted with the appropriate number of copies of ENG Form 4025.

1.5.3 Printed Material

All requirements for shop drawings shall apply to catalog cuts, illustrations, printed specifications, or other data submitted, except that the 3 inch by 4 inch clear area adjacent to the title block is not mandatory. Inapplicable portions shall be marked out and applicable items such as model numbers, sizes, and accessories shall be indicated by arrow or highlighted.

1.6 APPROVED SUBMITTALS

The approval of submittals by the COR shall not be construed as a complete check, but will indicate only that the general method of work, materials, detailing and other information are satisfactory. Approval will not relieve the Contractor of the responsibility for any error which may exist. The Contractor, under the CQC requirements of this contract, is responsible for the dimensions and design of adequate connections, details, and satisfactory construction of all work. After submittals have been approved by the COR, no resubmittal for the purpose of substituting materials or equipment will be given consideration.

1.7 DISAPPROVED SUBMITTALS

The Contractor shall make all corrections required by the COR and promptly furnish a corrected submittal in the format and number of copies specified for the initial submittal. If the Contractor considers any correction indicated on the submittals to constitute a change to the contract, written notice, as required under the Contract Clause entitled "Changes," shall be given to the COR.

1.8 PAYMENT

Separate payment, except as identified in the PRICE SCHEDULE (Section B) for “Contract Data”, will not be made for submittals, and all costs associated therein shall be included in the applicable unit prices or lump sum prices contained in the schedule. Payment will not be made for any material or equipment which does not comply with contract requirements.

PART 2 PRODUCTS (Not Applicable)

PART 3 EXECUTION

3.1 GENERAL

Prior to submittal, all items shall be checked and approved by the Contractor's CQC and each item of the submittal shall be stamped, signed, and dated. Each submittal shall be complete and in sufficient detail to allow ready determination of compliance with contract requirements. Government-approval submittals shall be scheduled and made prior to the acquisition of the material or equipment covered thereby. The COR may request submittals in addition to those listed when deemed necessary to adequately describe the

work covered in the respective sections. The Contractor shall maintain a complete and up-to-date file of all submittals/items on site for use by both the Contractor and the Government.

3.2 SUBMITTAL PROCEDURES

3.2.1 General

Shop drawings with transmittal forms shall be submitted in the number of copies specified in subparagraphs "Government Approved Submittals" and "Information Only Submittals," or as indicated on the submittal register in the “Remarks” column. Submit a complete collated “reviewers copy” with one transmittal form and attachments (not originals). The remaining copies (4 for Government-approval, 2 for information-only) of transmittal forms and attachments shall not be collated. This would not apply to a series of drawings.

3.2.2 Approval of Submittals by the Contractor

Before submittal to the COR, the Contractor shall review and correct shop drawings prepared by subcontractors, suppliers, and itself, for completeness and compliance with plans and specifications. The Contractor shall not use red markings for correcting material to be submitted. Red markings are reserved for COR’s use. Approval by the Contractor shall be indicated on each shop drawing by an approval stamp containing information as shown in this section. Submittals not conforming to the requirements of this section will be returned to the Contractor for correction and resubmittal.

3.2.3 Variations

For submittals which include proposed variations requested by the Contractor, column “h” of ENG Form 4025, if applicable, shall be checked and the submittal shall be classified as G, and submitted accordingly. The Contractor shall set forth in writing the justification for any variations and annotate such variations on the transmittal form in the REMARKS block. Variations are not approved unless there is an advantage to the Government. The Government reserves the right to rescind inadvertent approval of submittals containing unnoted variations.

3.3 CONTROL OF SUBMITTALS

The Contractor shall carefully control his procurement operations to ensure that each individual submittal is made on or before the Contractor scheduled submittal date shown on the approved "Submittal Register" or the CDRL.

3.4 GOVERNMENT APPROVED SUBMITTALS (G)

The Contractor shall submit 5 copies of G submittals with 5 corresponding transmittal forms. Upon completion of G submittal review, copies as specified below will be marked with an action code, dated, and returned to the Contractor. See paragraph 1.5.2 “Drawings” above for special instructions if drawings larger than size A3 (11 inch by 17 inch) are used.

3.4.1 Processing of G Submittals

Submittals will be reviewed and processed as follows:

a. Approved as Submitted (Action Code "A"): Shop drawings which can be approved without correction will be stamped "Approved" and two copies will be returned to the Contractor. No resubmittal required.

b. Approved Except as Noted (Action Code "B"): Shop drawings which have only minor discrepancies will be annotated in red to indicate necessary corrections. Marked material will be stamped "Approved Except as Noted" and two copies returned to the Contractor for correction. No resubmittal required.

c. Approved Except as Noted (Action Code "C"): Shop drawings which are incomplete or require more than minor corrections will be annotated in red to indicate necessary corrections. Marked material will be stamped "Approved Except as Noted - Resubmission Required" and two copies returned to the Contractor for correction. Resubmittal of only those items needing correction required.

d. Disapproved (Action Code "E"): Shop drawings which are fundamentally in error, cover wrong equipment or construction, or require extensive corrections, will be returned to the Contractor stamped "Disapproved." An explanation will be furnished on the submitted material or on transmittal form indicating reason for disapproval. Complete resubmittal required.

e. Resubmittal will not be required for shop drawings stamped "A" or "B" unless subsequent changes are made by Contractor or a contract modification. For shop drawings stamped "C" or "E," Contractor shall make corrections required, note any changes by dating the revisions to correspond with the change request date, and promptly resubmit the corrected material. Resubmittals shall be associated with the “parent” by use of sequential alpha characters (for example, resubmittal of transmittal 8 will be 8A, 8B, etc). Government costs incurred after the first resubmittal may be charged to the Contractor.

3.5 INFORMATION ONLY SUBMITTALS

The Contractor shall submit three copies of data and four copies of transmittal form. Information-only submittals will not be returned. Government approval is not required on information-only submittals. These submittals will be used for information purposes. The Government reserves the right to require the Contractor to resubmit any item found not to comply with the Contract. This does not relieve the Contractor from the obligation to furnish material conforming to the plans and specifications and will not prevent the COR from requiring removal and replacement if nonconforming material is incorporated in the work. This does not relieve the Contractor of the requirement to furnish samples for testing by the Government laboratory or check testing by the Government in those instances where the technical specifications so prescribe.

3.5.1 Processing of Information-Only Submittals

Information-only submittals shall be submitted prior to delivery of the material or equipment to the job site. Transmittal form shall be marked with the words "contractor approved - information copy only" in the REMARKS block of the form. Submittals will be monitored and spot checks made. When such checks indicate noncompliance, the Contractor will be notified by the same method used for Government-approval submittals. Resubmittal of nonconforming information-only submittals shall be reclassified Government-approval and shall be in five copies.

3.6 SAMPLES REQUIRING LABORATORY ANALYSIS

See Section 01450 CHEMICAL DATA QUALITY CONTROL, for procedures and address for samples requiring Government testing.

3.7 SAMPLES REQUIRING VISUAL INSPECTION

Samples requiring only physical inspection for appearance and suitability shall be coordinated with the on-site Government quality assurance representative (QAR).

END OF SECTION

SECTION 01351

SAFETY, HEALTH, AND EMERGENCY RESPONSE (HTRW/UST)

PART 1 GENERAL

1.1 REFERENCES

The publications listed below form a part of this specification to the extent referenced. The publications are referred to in the text by basic designation only.

AMERICAN CONFERENCE OF GOVERNMENTAL INDUSTRIAL HYGIENISTS (ACGIH)

ACGIH-0100	(2001) Threshold Limit Values for Chemical Substances and Physical Agents and Biological Exposure Indices

AMERICAN NATIONAL STANDARDS INSTITUTE (ANSI)

ANSI Z358.1	(1990) Emergency Eyewash and Shower Equipment

CODE OF FEDERAL REGULATIONS (CFR)

10 CFR 20	Standards for Protection Against Radiation
29 CFR 1904	Recording and Reporting Occupational Injuries and Illnesses
29 CFR 1910	Occupational Safety and Health Standards
29 CFR 1926	Safety and Health Regulations for Construction
49 CFR 171	General Information, Regulations, and Definitions
49 CFR 172	Hazardous Materials Table, Special Provisions, Hazardous Materials Communications, Emergency Response Information, and Training Requirements

WASHINGTON ADMINISTRATIVE CODE (WAC)

WAC 296-24	General Health and Safety Standards
WAC 296-62	General Occupational Health Standards
WAC 296-155	Safety Standards for Construction Work
WAC 173-60	Maximum Environmental Noise Levels

ENGINEERING MANUALS

EM 385-1-1 (1996)	US Army Corps of Engineers Safety and Health Requirements Manual

ENGINEERING REGULATIONS

ER 385-1-92 (2000)	Safety and Occupational Health Requirements for Hazardous, Toxic, and Radioactive Waste (HTRW) Activities

NATIONAL INSTITUTE FOR OCCUPATIONAL SAFETY AND HEALTH (NIOSH)

Pub No. 85-115 (1985)	Occupational Safety and Health Guidance Manual for Hazardous Waste Site Activities
Pub No. 78-107 (1977)	Criteria for a Recommended Standard Exposure to Coal Tar Products (Chapter I)

AGENCY FOR TOXIC SUBSTANCES AND DISEASE REGISTRY

September 2000	Toxicological Profile for Creosote (Update), draft.

1.2 DESCRIPTION OF WORK

This section provides additional requirements for implementing the accident prevention provisions of EM 385-1-1, and specifies a Site Safety and Health Plan (SSHP) which shall satisfy the requirements for submission of a separate Accident Prevention Plan (APP) as required by EM 385-1-1. The requirements shall apply to work performed in both “contaminated “ and “clean” areas. The work to be covered by this SSHP is summarized in paragraph 1.9.1 below. To facilitate the transition for the incoming O & M Contractor, use of the existing SSHP will be accepted by the Government. The existing SSHP will be provided by the Government upon award of this contract. The Contractor shall prepare an initial amendment to the existing SSHP that details the Contractor’ s corporate safety policy and presents names and positions of key personnel involved in the contract. The existing SSHP with Contractor’ s initial amendment will be accepted for 90 days, after the 90 day period, the Contractor may recommend changes to the existing SSHP for approval by the COR.

1.3 SUBMITTALS

Government approval is required for submittals with a "GA" designation; submittals having an "FIO" designation are for information only. The following shall be submitted in accordance with Section 01330 SUBMITTAL OF CONTRACT DATA:

1.3.1 SD-04 Drawings

Work Zones and Decontamination Facilities; GA

Drawings shall be included as part of the SSHP (see below) and shall show initial work zone boundaries: Exclusion Zone (EZ), including restricted and regulated areas; Contamination Reduction Zone (CRZ); and Support Zone (SZ). Drawings shall also show the layout for the personnel and equipment decontamination

areas. Electronic drawings will be provided for Contractor use by the Government after award. Any changes to the drawings or reclassification of work zones require approval of the COR.

1.3.2 SD-09 Reports

SSHP (Amendment); GA

Submit initial amendment and acceptance of existing SSHP within seven calendar days of award to cover first 90 days of contract work. Any revisions to the existing SSHP recommended by the Contractor after the initial 90 period shall meet the requirements described in paragraphs 1.7 through 1.25. The format to be followed is provided in ER 385-1-92 (2000) Appendix C.

Monitoring/Sampling Results; FIO

The results of any personnel exposure monitoring /sampling shall be reported to the COR. Personnel exposure monitoring has be conducted by the previous O & M Contractor and used to determine appropriate work zone designations. Consequently, further personnel exposure monitoring is not required under this contract. Any testing that the Contractor may choose initiate shall be submitted daily with DCQCR. In addition, these results are to be submitted formally with an approved transmittal form monthly with a summary provided of the samples collected, monitoring performed and results. If any PPE upgrades or downgrades have been initiated based on sample results, describe what action was taken and any associated follow-up.

Site Control Log; FIO

Record of each entry and exit into the site, as specified. Submit daily with the DCQCR.

Safety and Health Phase-out Report; GA

As described in paragraph 1.26.

1.4 REGULATORY REQUIREMENTS

Work performed under this contract shall comply with EM 385-1-1, applicable Federal, state, and local safety and occupational health laws and regulations. This includes, but is not limited to, Occupational Safety and Health Administration (OSHA) standards, 29 CFR 1910, especially Section .120, "Hazardous Waste Site Operations and Emergency Response" and 29 CFR 1926, especially Section .65, "Hazardous Waste Site Operations and Emergency Response". This also includes the corresponding Washington State Department of Labor and Industries regulations WAC 296-24, WAC 296-62, and WAC 296-155. Matters of interpretation of standards shall be submitted to the appropriate administrative agency for resolution before starting work. Where the requirements of this specification, applicable laws, criteria, ordinances, regulations, and referenced documents vary, the most protective requirements shall apply.

1.5 PRECONSTRUCTION SAFETY CONFERENCE

The Contractor shall conduct a preconstruction safety conference that will be held before on-site work begins. All the Contractor' s safety related issues shall be presented at the conference. Joint Health and Safety meetings will be held once work begins on site with all Contractors participating. This shall also addresses the requirements of paragraph 1.12.2.1 below.

1.6 SAFETY AND HEALTH PROGRAM

OSHA Standards 29 CFR 1910.120 (b) and 29 CFR 1926.65 (b) require employers to develop and implement a written Safety and Health Program for employees involved in hazardous waste operations. The site-specific program requirements of the OSHA Standards shall be integrated into one site-specific document, the Site Safety and Health Plan (SSHP). The SSHP shall interface with the employer's overall Safety and Health Program. Any portions of the overall Safety and Health Program that are referenced in the SSHP shall be included as appendices to the SSHP**.**

1.7 SITE SAFETY AND HEALTH PLAN

1.7.1 Preparation and Implementation

An existing Site Safety and Health Plan (SSHP) has been prepared covering all phases of on-site work to be performed by the Contractor and all subcontractors, including operations, maintenance, emergencies, etc. The Safety and Health Manager shall be responsible for implementing and oversight of the existing SSHP. The SSHP has established, in detail, the protocols necessary for the anticipation, recognition, evaluation, and control of hazards associated with each task performed. The existing SSHP addresses site-specific safety and health requirements and procedures based upon site-specific conditions. Details about some activities may not have been available when the initial SSHP was prepared and submitted. Therefore, the SSHP amendment prepared by the Contractor shall address, in as much detail as possible, anticipated tasks, their related hazards and anticipated control measures. Additional details shall be included in the activity hazard analyses as described in paragraph ACTIVITY HAZARD ANALYSES. The format shall be as specified in ER 385-1-92 (2000) Appendix C.

1.7.2 Acceptance and Modifications

Due to the short lead time in the project schedule, the Contractor shall work under the existing SSHP for the groundwater treatment plant operations and maintenance while preparing their own recommendations for revisions to the SSHP to be submitted for approval after 90 days from award. Prior to acceptance of the existing SSHP, a letter of acceptance shall be signed and dated by the Safety and Health Manager and the Site Superintendent. The SSHP acceptance letter shall be submitted within 7 days of notice of proceed. Deficiencies in the SSHP will be discussed at the preconstruction safety conference, and the SSHP amendment prepared by the Contractor shall be revised to correct the deficiencies and resubmitted for acceptance. On-site work shall not begin until the plan amendment (Contractor' s initial amendment and acceptance) has been accepted with a “A” or “B” or “C” action code (see Section 01330 SUBMITTAL OF CONTRACT DATA). A copy of the written SSHP with the amendment shall be maintained on-site. As work proceeds, the SSHP shall be adapted to new situations and new conditions by additional amendments. Changes and modifications to the existing SSHP shall be made with the knowledge and concurrence of the Safety and Health Manager, the Site Superintendent, and the

Contracting Officer (or designee). Should any unforeseen hazard become evident during the performance of the work, the Site Safety and Health Officer (SSHO) shall bring such hazard to the attention of the Safety and Health Manager, the Site Superintendent, and the Contracting Officer (or designee), both verbally and in writing, for resolution as soon as possible. In the interim, necessary action shall be taken to re-establish and maintain safe working conditions in order to safeguard on-site personnel, visitors, the public, and the environment. Disregard for the provisions of this specification or the accepted SSHP shall be cause for stopping of work until the matter has been rectified.

1.7.3 Availability

The existing SSHP and amendments shall be made available in accordance with 29 CFR 1910.120 (b)(1)(v) and 29 CFR 1926.65 (b)(1)(v).

1.7.4 Elements

Topics required by 29 CFR 1910.120 (b)(4), 29 CFR 1926.65 (b)(4), and the Accident Prevention Plan as described in Appendix A of EM 385-1-1 and those described in this section shall be addressed in the SSHP. Where the use of a specific topic is not applicable to the project, the SSHP amendment shall include a statement to justify its omission or reduced level of detail and establish that adequate consideration was given the topic. The format specified in ER 385-1-92 (2000) Appendix C will assist in addressing these elements.

1.8 SITE DESCRIPTION AND CONTAMINATION CHARACTERIZATION

1.8.1 Project/Site Conditions

The Wyckoff property occupies approximately 57 acres (about 18 of which encompass the Soil OU), including a spit with about 0.8 miles of shoreline extending northward into Eagle Harbor. The spit has been extended and filled at least twice prior to the 1950s, and was the location of wood treatment activities that have caused the current soil and groundwater contamination. The spit covers approximately 8 acres, and contains the majority of the on-site contamination.

The Wyckoff Groundwater and Soils Operable Units occupy a relatively flat lowland (the spit and the log peeler area) and intertidal area bounded by a densely vegetated bluff on the south. The lowland area has an average elevation of approximately 10 feet NGVD (15 feet mean lower low water) while the hillside area rises to elevations above 200 feet. A small stream flows north from the hills above the western arm of the property into a culvert that discharges into Eagle Harbor. The north and west portions of the spit are bounded by Eagle Harbor, and Puget Sound abuts the eastern margin of the site.

From 1904 through 1988, a succession of companies treated wood at the Wyckoff property for use as railroad ties and trestles, telephone poles, pilings, docks, and piers; the wood-preserving plant was one of largest in the United States. Wyckoff products were sold throughout the nation and the rest of the world. Wood-preserving operations included the use and storage of creosote, pentachlorophenol (PCP), solvents, gasoline, antifreeze, fuel and waste oil, and lubricants; management of process wastes; wastewater treatment and discharge; and storage of treated wood and wood products.

Creosote, PCP, fuel oil, and other solvents were stored at the property in aboveground storage tanks. A network of above and below ground piping conveyed process chemicals and other substances between

structures where wood-preserving activities were conducted. Sumps containing water and sludge, and drums containing lubricants, solvents, and various waste oils were also located at the property.

There is little historic information about the waste management practices at the Wyckoff facility. Process waste included wastewater and solids that accumulated in process vessels (i.e., sludge). A transfer pit, tram loading area, and log storage yard were used to transfer and store treated and untreated wood. Logs were transported by rail to and from the retorts using the transfer table. Prior to reconstruction of the Wyckoff facility in the 1920s, it is reported that logs were floated in and out of a lagoon that once existed in the former tram loading area. The lagoon has since been filled. Treated logs were also transported from the facility at the former West Dock via the transfer pit. The log storage area was primarily used to store untreated wood. Wastewater was discharged into Eagle Harbor for many years, and the practice of storing treated pilings and timber in the water continued until the late 1940s.

From 1957 to 1981 process wastewaters from retorts were disposed of into a former sump. In 1981, the Wyckoff Company changed their process wastewater disposal practice to a closed recycle-evaporation system that resulted in all process wastewaters being recycled. Sludges that settled from the closed-recycle system were collected for disposal.

In the early years of operation, the residual solution that drained from the retorts following completion of the treating cycle went directly to the ground. In later years, the residual solution was drained into metal-lined concrete catch basins and pumped into storage tanks for reuse.

Soil and groundwater at the Wyckoff site are contaminated primarily with creosote and pentachlorophenol (PCP) that were used as wood preservatives. Free-phase product is known to exist in the subsurface as well as dissolved contaminants in groundwater and adsorbed contaminants on the soil matrix. Approximately 60,000 gallons of mobile (at ambient temperatures) light and dense non-aqueous phase liquid contaminant is estimated to be present within the (future) pilot test area. The entire volume of the (future) pilot area (35,300 cubic yards) is contaminated to some extent either with NAPL, or petroleum hydrocarbons sorbed to soil and dissolved in groundwater. Dioxins/furans have been detected in site soils. Hydrogen sulfide has been detected in some of the wells. Maximum soil PAH concentrations are as follows:

Compound	**Maximum NAPL Concentration**	**Maximum Soil Concentration**
PAHs	62.5%	432,330 ppm
Acenaphthene	2.69%	14,500 ppm
Acenaphthylene	0.23%	970 ppm
Anthracene	0.57%	15,000 ppm
Benz(a)anthracene	0.31%	990 ppm
Benzo(a)pyrene	0.25%	160 ppm
Benzo(b)fluoranthene	0.25%	570 ppm
Benzo(k)fluoranthene	0.24%	91 ppm
Benzo(g,h,i)perylene	0%	59 ppm
Chrysene	0.30%	1100 ppm
Dibenz(a,h)anthracene	0%	33 ppm

Fluoranthene	1.83%	8600 ppm
Fluorene	1.90%	13,000 ppm
Indeno(1,2,3-cd)pyrene	0.03%	62 ppm
Naphthalene	34.79%	340,000 ppm
Phenanthrene	3.13%	29,000 ppm
Pyrene	1.02%	6100 ppm
Pentachlorophenol	0.14%	140 ppm
Dioxin	13 ppb (TEQ)	0.014 ppm (TEQ)
Diesel fuel	NA	680,000 ppm

1.8.2 Other Contractors on Site

Other contractors will be present on the Wyckoff site. The SSHP amendment shall address coordination with the other contractors.

1.8.3 Plan Requirements

The existing SSHP includes a site description and contamination characterization section that addresses the following elements:

a. Description of site location, topography, size and past uses of the site.

b. A list of contaminants which may present occupational health and safety hazards. Chemical names, concentration ranges, locations on-site, and estimated quantities to be impacted by site work shall be included, if known. The contamination characterization shall be reviewed and revised if new chemicals are identified as work progresses.

1.9 HAZARD/RISK ANALYSIS

The existing SSHP includes a safety and health hazard/risk analysis for each site task and operation to be performed. The hazard/risk analysis shall provide information necessary for determining safety and health procedures, equipment, and training to protect on-site personnel, the environment, and the public. Available site information shall be reviewed when preparing amendments to the existing "Hazard/Risk Analysis" section of the SSHP. The following elements, at a minimum, shall be addressed.

1.9.1 Site Tasks and Operations (Work Plan)

The SSHP amendment shall include a section that addresses changes to the tasks and objectives of the site operations and the logistics and resources required to reach those tasks and objectives. Based on the type of remediation required, the following is a list of anticipated major site tasks and operations to be performed (not necessarily in chronological order):

- Operation and maintenance of the existing water treatment plant

- Emergency response in support of remedial activities.

- Waste handling and disposal, including change out of spent granular activated carbon and pumping of NAPL.
- Sampling to monitor the treatment process
- Decontamination of personnel and equipment.

This is not necessarily a complete list of site tasks and operations, therefore, it shall be expanded and/or revised, during preparation of the SSHP amendment as necessary in consultation with the remainder of this contract.

1.9.2 Hazards

The following potential hazards may be encountered during site work. These are not complete lists, therefore, they shall be expanded and/or revised as necessary during preparation of the SSHP amendment.

1.9.2.1 Safety Hazards. The inherent hazards associated with the above activities shall be addressed in the exiting SSHP or amendments. The Contractor shall include in any future SSHP amendments the measures they will take to reduce the potentially increase of Safety hazards. Any hazards associated with equipment/treatment process failure within the treatment system must be addressed.

1.9.2.2 Chemical Hazards. Potential chemical hazards that may be encountered during site work include creosote, dioxin/furan, and/or pentachlorophenol contaminated soil as well as actual NAPL product. The Hazard/Risk Analysis section of any future SSHP amendments shall describe the chemical, physical, and toxicological properties of contaminants, sources and pathways of employee exposures, anticipated on-site and offsite exposure level potentials, and regulatory (including Federal, state, and local) or recommended protective exposure standards. Amendments to the existing SSHP shall also address employee exposure to hazardous substances brought on-site (such as those chemicals which are added to the treatment process or are associated with construction activities), and shall comply with the requirements of 29 CFR 1910.120, 29 CFR 1926.65, and 29 CFR 1910.1200, Hazard Communication.

1.9.2.3 Physical Agents. Potential physical hazards that may be encountered during site work are heat stress and/or cold stress (depending on time of year), noise hazards, dust, and ultraviolet radiation.

1.9.2.4 Biological Agents. Potential biological hazards that may be encountered during site work are animal bites and scratches, rabies and other types of disease transmission, hanta virus, and bloodborne pathogens (for first aid responders). There are also bacteria and other microscopic organisms within the biomedia used in the treatment process.

1.9.3 Action Levels

Action levels shall be established for the situations listed below, at a minimum.

a. Implementation of engineering controls and work practices.

b. Upgrade or downgrade in level of personal protective equipment.

c. Work stoppage and/or emergency evacuation of on-site personnel.

d. Prevention and/or minimization of public exposures to hazards created by site activities.

The action levels and required actions (engineering controls, changes in PPE, etc.) shall be presented in the any future amendments to the existing SSHP in both text and tabular form. Currently, a community action level of 1 mg/m^3 for dust has been set. The Contractor shall provide justifications for deviation from this level in their plan. The Contractor shall take measures to meet this action level, as well as demonstrate to the CO that this action level is being met (e.g., air monitoring/sampling).

1.10 ACTIVITY HAZARD ANALYSES

Any changes recommended by the Contractor to the existing Activity Hazard Analysis shall be prepared by the Contractor performing that work and submitted for review and acceptance. The format shall be in accordance with EM 385-1-1, Figure 1-1. A major phase of work is defined as an operation involving a type of work presenting hazards not experienced in previous operations or where a new subcontractor or work crew is to perform. The analysis shall define the activities to be performed and identify the sequence of work, the specific hazards anticipated, and the control measures to be implemented to eliminate or reduce each hazard to an acceptable level.

Work shall not proceed on that phase until the activity hazard analysis has been accepted and a preparatory meeting has been conducted by the Contractor to discuss its contents with everyone engaged in the activities, including government on-site representatives. The activity hazard analyses shall be continuously reviewed by the Site Safety and Health Officer and site staff and, when appropriate, modified to address changing site conditions or operations, with the concurrence of the Safety and Health Manager, the Site Superintendent, and the Contracting Officer (or designee). Activity hazard analyses shall be attached to and become a part of the SSHP. The SSHP shall include an AHA for each specific site task. The AHA shall be in the tabular format denoted in EM 385-1-1.

1.11 STAFF ORGANIZATION, QUALIFICATIONS, AND RESPONSIBILITIES

An organizational structure shall be developed as part of the initial SSHP amendment that sets forth lines of authority (chain of command), responsibilities, and communication procedures concerning site safety, health, and emergency response. This organizational structure shall cover management, supervisors and employees of the Contractor and subcontractors. The structure shall include the means for coordinating and controlling work activities of subcontractors and suppliers. The SSHP amendment shall include a description of this organizational structure as well as qualifications and responsibilities of each of the following individuals. The Contractor shall obtain Contracting Officer's acceptance before replacing any member of the Safety and Health Staff. Requests shall include the names, qualifications, duties, and responsibilities of each proposed replacement.

1.11.1 Site Superintendent

A Site Superintendent, who has responsibility to implement the SSHP, the authority to direct work performed under this contract and verify compliance, shall be designated.

1.11.2 Safety and Health Manager

1.11.2.1 Qualifications

The services of a Certified Industrial Hygienist certified by the American Board of Industrial Hygiene or a Safety Professional Certified by the Board of Certified Safety Professionals shall be utilized. The name, qualifications (education summary and documentation, ABIH or BCSP certificate), and work experience summary shall be included in the SSHP amendment. The Safety and Health Manager may hold other duties for the project, including but not limited to, Site Safety and Health Officer. The Safety and Health Manager shall have the following additional qualifications:

a. A minimum of 5 years experience in developing and implementing safety and health programs at complex hazardous waste sites.

b. Documented experience in supervising professional and technician level personnel.

c. Documented experience in developing worker exposure assessment programs and air monitoring programs and techniques.

d. Documented experience in the development of personal protective equipment programs, including programs for working in and around potentially toxic materials.

e. Working knowledge of state and Federal occupational safety and health regulations.

1.11.2.2 Responsibilities

The Safety and Health Manager shall:

a. Be responsible for the development, implementation, oversight, and enforcement of the SSHP.

b. Sign and date the SSHP prior to submittal.

c. Conduct initial site-specific training.

d. Be present on-site during the first day of specific activities, which pose a potential for exposure or with elevated concerns with regard to worker safety.

e. Be available for emergencies.

f. Provide on-site consultation as needed to ensure the SSHP is fully implemented.

g. Coordinate any modifications to the SSHP with the Site Superintendent, the SSHO, and the Contracting Officer.

h. Provide continued support for upgrading/downgrading of the level of personal protection.

i. Be responsible for evaluating air monitoring data and recommending changes to engineering controls, work practices, and PPE.

j. Review accident reports and results of daily inspections.

k. Serve as a member of the Contractor's quality control staff.

1.11.3 Site Safety and Health Officer (SSHO)

1.11.3.1 Qualifications

An individual and one alternate shall be designated the Site Safety and Health Officer (SSHO). The name, qualifications (education and training summary and documentation), and work experience of the Site Safety and Health Officer and alternate shall be included in the SSHP. The SSHO may perform other functions and duties for this project, including but not limited to Safety and Health Manager. The SSHO shall have the following qualifications:

a. A minimum of 5 years experience in implementing safety and health programs at hazardous waste sites where Level C personal protective equipment was required.

b. Documented experience in construction techniques and construction safety procedures.

c. Working knowledge of Federal and state occupational safety and health regulations.

d. Specific training in personal and respiratory protective equipment program implementation, in the proper use of air monitoring instruments, and air sampling methods.

1.11.3.2 Responsibilities

The Site Safety and Health Officer shall:

a. Assist and represent the Safety and Health Manager in on-site training and the day to day on-site implementation and enforcement of the accepted SSHP,

b. Be assigned to the site on a full time basis for the duration of field. If operations are performed during more than one work shift per day, a site Safety and Health Officer shall be present for each shift.

c. Have authority to ensure site compliance with specified safety and health requirements, Federal, state and OSHA regulations and all aspects of the SSHP including, but not limited to, activity hazard analyses, air monitoring, use of PPE, decontamination, site control, standard operating procedures used to minimize hazards, safe use of engineering controls, the emergency response plan, spill containment program, and preparation of records by performing a daily safety and health inspection and documenting results on the Daily Safety Inspection Log.

d. Have authority to stop work if unacceptable health or safety conditions exist, and take necessary action to re-establish and maintain safe working conditions.

e. Consult with and coordinate any modifications to the SSHP with the Safety and Health Manager, the Site Superintendent, and the Contracting Officer (or designee).

f. Serve as a member of the Contractor's quality control staff on matters relating to safety and health.

g. Conduct accident investigations and prepare accident reports.

h. Review results of daily quality control inspections and document safety and health findings into the Daily Safety Inspection Log.

i. In coordination with site management and the Safety and Health Manager, recommend corrective actions for identified deficiencies and oversee the corrective actions.

j. Coordinate site activities, which may affect the safety of other Contractors personnel on site with all Contractors on site.

1.11.4 Persons Certified in First Aid and CPR

At least two persons who are currently certified in first aid and CPR by the American Red Cross or other approved agency shall be on-site at all times. They shall be trained in universal precautions and the use of PPE as described in the Bloodborne Pathogens Standard of 29 CFR 1910.1030. These persons may perform other duties but shall be immediately available to render first aid when needed.

1.12 TRAINING

Personnel shall receive training in accordance with the Contractor's written safety and health training program and 29 CFR 1910.120 and 29 CFR 1926.65. The SSHP amendment shall include a section describing training requirements.

1.12.1 General Hazardous Waste Operations Training

Personnel entering the restricted, exclusion or contamination reduction zones (except transportation subcontractors) shall meet the requirements of 29 CFR 1910.120, related to HAZWOPER training. On-site supervisors shall have completed the above training and 8 hours of additional, specialized training covering at least the following topics: the employer's safety and health program, personal protective equipment program, spill containment program, and health hazard monitoring procedures and techniques. Copies of current training certification statements shall be included in the SSHP with any updates submitted to the COR and kept in an on-site file prior to initial entry onto the work site.

1.12.2 Site-specific Training

Site-specific training sessions shall be documented in accordance with Section 01.B.03.b of EM 385-1-1. All Contractor (and subcontractor) personnel performing work on-site (except for transportation subcontractors) shall receive site-specific training, as described above.

1.12.2.1 Initial Session (Pre-entry Briefing)

Prior to commencement of on-site field activities, all site employees, including those assigned only to the Support Zone, shall attend a site-specific safety and health training session of at least 2 hours duration. This session shall be conducted by the Safety and Health Manager and the Site Safety and Health Officer to ensure that all personnel are familiar with requirements and responsibilities for maintaining a safe and healthful work environment. Procedures and contents of the accepted SSHP and Sections 01.B.02 and

28.D.03 of EM 385-1-1 shall be thoroughly discussed. The Contracting Officer shall be notified at least 5 days prior to the initial site-specific training session so Corps of Engineers, EPA, and other on-site contractor personnel involved in the project may attend.

1.12.2.2 Periodic Sessions

Periodic on-site training shall be conducted by the SSHO at least weekly for personnel assigned to work at the site during the following week. The training shall address safety and health procedures, work practices, any changes in the SSHP, activity hazard analyses for the work to be preformed today will be reviewed, work tasks, or schedule, review of safety discrepancies, and accidents. Should an operational change affecting on-site fieldwork be made, a meeting prior to implementation of the change shall be convened to explain safety and health procedures. Site-specific training sessions for new personnel, visitors, and suppliers shall be conducted by the SSHO using the training curriculum outlines developed by the Safety and Health Manager. Brief daily health and safety meetings ("tailgate meetings") shall be held to review any safety issues which occurred during the previous day' s activities and to review the AHA for tasks to be performed that day as well as discuss any potential hazards/concerns for that day' s work. A record of daily safety meeting attendance and any topics discussed shall be documented in the daily CQC report.

1.12.2.3 Other Training

Persons involved in any aspect of the transportation of hazardous materials shall be trained in accordance with 49 CFR 172 Subpart H. Other training shall include that specified in paragraph 1.11.4 above as well as 29 CFR 1910.132 and 29 CFR 1910.134.

1.13 PERSONAL PROTECTIVE EQUIPMENT

1.13.1 General

In accordance with 29 CFR 1910.120 (g)(5) and 29 CFR 1926.65 (g)(5), a written Personal Protective Equipment (PPE) program which addresses the elements listed in that regulation, and which complies with respiratory protection program requirements of 29 CFR 1910.134, is to be included in the employer's Safety and Health Program. The Site Safety and Health Plan shall detail the minimum PPE ensembles (including respirators) and specific materials from which the PPE components are constructed for each site-specific task and operation to be performed, based upon the hazard/risk analysis. Components of levels of protection (B, C, D and modifications) must be relevant to site-specific conditions, including chemical contamination hazards, heat and cold stress potential and safety hazards. Only respirators approved by NIOSH shall be used. On-site personnel shall be provided with appropriate personal protective equipment. Protective equipment and clothing shall be kept clean and well maintained. The PPE section of the SSHP shall include site-specific procedures to determine PPE program effectiveness and for on-site fit testing of respirators, cleaning, maintenance, inspection, and storage of PPE.

1.13.2 Levels of Protection

The Safety and Health Manager shall establish appropriate levels of protection for each work activity based on review of historical site information, existing data, an evaluation of the potential for exposure (inhalation, dermal, ingestion, and injection) during each task, and a continuing safety and health monitoring

program. The Safety and Health Manager shall also establish action levels for upgrade or downgrade in levels of PPE from the following specified minimum levels of protection. Protocols and the communication network for changing the level of protection shall be described in the SSHP. The PPE reassessment protocol shall address air monitoring results, potential for exposure, changes in site conditions, work phases, job tasks, weather, temperature extremes, individual medical considerations, etc.

1.13.2.1 Components of Levels of Protection

The following items constitute minimum protective clothing and equipment ensembles to be utilized during this project:

Level D

A work uniform affording minimal protection, used for nuisance contamination only; along with hard hat and boots/shoes that have a steel toe and shank; outer boot cover will be chemical resistant, disposable boot covers, and eye protection (safety glasses with side shields, goggles, or splash shield).

Level D shall be used when (1) the atmosphere contains no known occupational hazard; and (2) work functions preclude splashes, immersion, or the potential for unexpected inhalation of or contact with hazardous levels of any chemicals.

Level C

Level D gear along with (1) a half- or full-face air purified respirator using contaminant-specific cartridges, (2) hooded, chemical resistant clothes with (3) outer and inner chemical-resistant gloves if in contact with liquids.

Level C gear shall be used when (1) the atmospheric contaminants, liquid splashes, or other direct contact will not adversely affect or be absorbed through any exposed skin; (2) the types of air contaminants have been identified, concentrations measured, and an air-purifying respirator is available that can remove the contaminants; and (3) all criteria for the use of air-purifying respirators are met.

1.13.2.2 Initial Minimum Levels of PPE by Task

Based on available information, the Contractor shall determine the necessary minimum levels of protection by task. Available site information shall be reviewed and the list of tasks and operations and the levels of protection shall be expanded and/or revised during preparation of the SSHP.

1.13.3 PPE for Government Personnel

Three clean sets of personal protective disposable outerwear (including disposable boot covers) shall be available for use by the Corps' on-site representative or official visitors on a daily basis. The items shall be stored in the Support Zone of the site in a clean, dry place, and "set aside" for Government use.

1.14 MEDICAL SURVEILLANCE

The Safety and Health Manager, shall detail, in the employer's Safety and Health Program and the SSHP amendment, the medical surveillance program that includes scheduling of examinations, certification of fitness for duty, compliance with OSHA requirements, and information provided to the physician. Examinations shall be performed by or under the supervision of a licensed physician, preferably one knowledgeable in occupational medicine, and shall be provided without cost to the employee, without loss of pay and at a reasonable time and place. Medical surveillance protocols and examination and test results shall be reviewed by the Occupational Physician. The medical surveillance program shall contain the requirements specified below. Personnel working in contaminated areas of the site shall have been examined as prescribed in 29 CFR 1910.120 and 29 CFR 1926.65 and determined medically fit to perform their duties.

1.14.1 Frequency of Examinations

Employees shall have been provided with medical examinations as specified, within the past 12 months and shall receive exams annually thereafter (if contract duration exceeds 1 year); on termination of employment; reassignment in accordance with 29 CFR 1910.120 (f)(3)(i)(C) and 29 CFR 1926.65 (f)(3)(i)(C); if the employee develops signs or symptoms of illness related to workplace exposures; if the physician determines examinations need to be conducted more often than once a year; and when an employee develops a lost time injury or illness during the period of this contract. The supervisor shall be provided with a written statement signed by the physician prior to allowing the employee to return to the work site after injury or illness resulting in a lost workday, as defined in 29 CFR 1904.12 (f).

1.14.2 Content of Examinations

The following elements shall be included in the medical surveillance program. Additional elements may be included at the discretion of the occupational physician responsible for reviewing the medical surveillance protocols based on the contaminants of concern at the site.

a. Complete medical and occupational history (initial exam only).

b. General physical examination of major organ systems.

c. Pulmonary function testing including FVC and FEV1.0.

d. CBC with differential.

e. Blood chemistry screening profile (e.g. SMAC 20/25).

f. Urinalysis with microscopic examination.

g. Audiometric testing (as required by 29 CFR 1910.95 and contractor Hearing Conservation Program).

h. Visual acuity.

i. Sputum cytology

j. Hematuria

k. Chest x-ray. (This test should be performed no more frequently than every 4 years, unless directed by Occupational Physician.)

l. Electrocardiogram (as directed by Occupational Physician).

If symptoms develop or overexposure is suspected, the following must be performed: urine test for phenol (2000 TLVs and BEIs, ACGIH) and 1-hydroxypyrene (ATSDR draft September 2000); exam of the nervous system; an exposed person should examine their skin periodically for growths, changes in warts or moles, and sores that do not heal.

1.14.3 Information Provided to the Occupational Physician

The physician shall be furnished with the following information, related to the duties generally performed by Contractor (or subcontractor) personnel, not necessarily information specific to this project:

a. information on the employee's anticipated or measured exposure.

b. a description of any PPE used or to be used.

c. A description of the employee's duties as they relate to the employee’ s exposures (including physical demands on the employee and heat/cold stress).

d. A copy of 29 CFR 1910.120, or 29 CFR 1926.65.

e. Information from previous examinations not readily available to the examining physician.

f. A copy of Section 5.0 of NIOSH Pub No. 85-115.

g. Information required by 29 CFR 1910.134.

1.14.4 Physician's Written Opinion

Before work begins a copy of the physician's written opinion for each employee shall be obtained and furnished to the Safety and Health Manager, the employee, and the Contracting Officer. The opinion shall be included in the SSHP with any updates submitted to the COR. The opinion shall address the employee's ability to perform hazardous remediation work and shall contain the following:

a. The physician's recommended limitations upon the employee's assigned work and/or PPE usage.

b. The physician's opinion about increased risk to the employee's health resulting from work; and

c. A statement that the employee has been informed and advised about the results of the examination.

1.14.5 Medical Records

Documentation of medical exams shall be provided as part of the Certificate of Worker or Visitor Acknowledgment. Medical records shall be maintained in accordance with 29 CFR 1910.120 and 29 CFR 1926.65.

1.15 (Not Used)

1.16 EXPOSURE MONITORING/AIR SAMPLING PROGRAM

The Contractor may also evaluate worker exposure potential to the NAPL present at the site by collecting personal samples to be analyzed using either NIOSH Method 5506 or OSHA Method 58 for coal tar pitch volatiles, coke oven emissions, and selected polynuclear aromatic hydrocarbons and samples to be analyzed for pentachlorophenol using either NIOSH method 5512 or OSHA Method 39. The Contractor may propose an appropriate sampling frequency, strategy and associated action levels (with corresponding revisions to PPE) to ensure that workers are being adequately protected. Reference the current Health and Safety Plan for the groundwater treatment plant operations.

Noise monitoring may be evaluated and frequency of monitoring proposed for each site activity generating noise.

1.17 HEAT AND COLD STRESS MONITORING

The Safety and Health Manager may develop a heat stress and cold stress-monitoring program for on-site activities. Details of the monitoring program, including schedules for work and rest, and physiological monitoring requirements, are described in the existing SSHP. Personnel shall be trained to recognize the symptoms of heat and cold stress. The SSHO and an alternate person shall be designated, in writing, to be responsible for the heat and cold stress-monitoring program.

1.17.1 Heat Stress

Physiological monitoring shall commence when the ambient temperature is above 70 °F. Monitoring frequency shall increase as the ambient temperature increases or as slow recovery rates are observed. An adequate supply of cool drinking water shall be provided for the workers. NIOSH Pub No. 85-115 may be consulted for guidance in determining protocols for prevention of heat stress.

1.17.2 Cold Stress

To guard against cold injury, appropriate clothing and warm shelter for rest periods shall be provided. Procedures to monitor and avoid cold stress shall be followed in accordance with the current TLVs for Cold Stress as recommended in ACGIH-0100.

1.18 SAFETY PROCEDURES, ENGINEERING CONTROLS AND WORK PRACTICES

The existing SSHP describes the standard operating safety procedures, engineering controls and safe work practices already implemented at the Wyckoff site for the work covered under this contract. Previously established specific requirements have been added below. These shall include, but not be limited to, the following:

1.18.1 General Site Rules/Prohibitions

General site rules/prohibitions (buddy system, eating, drinking, and smoking restrictions, etc).

All personnel will check in and out at the sign-in booth at the entry of the trailer court. Personnel must sign in and out each time they enter onto or leave the site. Do not permit any spark sources within exclusion or contamination reduction zones except in accordance with procedures developed under paragraph 1.18.6 below. Avoid visibly contaminated areas. Follow decontamination and housekeeping procedures to reduce the potential for the spread of contamination. Eating and drinking are only allowed in the offices. Smoking is not allowed within the property boundaries or within 50 feet of buildings, fuel, and propane tanks. Chewing gum or tobacco is only allowed in the support zone. Keep all tools in good repair. Make sure the correct tool is used for each job. Practice good housekeeping at all times. Immediately clean up any grease, oil, hydraulic fluid, or NAPL product that may have spilled or leaked from equipment. Do not use flammable solvents to clean up oil and grease. Keep all passageways, aisles, stairs, and exits clear of tools, equipment, and other materials at all times. Properly store all chemicals and equipment. No firearms, alcoholic beverages, or illegal drugs are allowed on site. The vehicle speed limit on site is 5 mph. This speed limit helps in reducing generation of dusts and reduces the effort required for dust control activities.

1.18.2 Work Permit Requirements

The contractor shall coordinate with the local fire department to determine what permits they require (such as hot work, etc.) and shall then specify what those requirements are as well as identify any activities/tasks requiring confined space entry permits.

1.18.3 Material Handling Procedures

Material handling procedures shall be in compliance with EM 385-1-1, Section 06.B and 14. Pressurized equipment and systems shall also be addressed. Procedures, controls and work practices shall be specified and shall be in accordance with EM 385-1-1, Section 20.

1.18.3.1 Spill and Discharge Control

Written spill and discharge containment/control procedures shall be developed and implemented. These procedures shall describe prevention measures, such as building berms or dikes; spill control measures and material to be used (e.g. booms, vermiculite); location of the spill control material; personal protective equipment required to clean up spills; disposal of contaminated material; and who is responsible to report the spill. (Refer also to requirements in Section 01410 ENVIRONMENTAL PROTECTION.)

1.18.3.2 Materials Transfer Safety

Storage conditions shall be controlled to prevent overheating and pressure buildup in containers of creosote/NAPL. Transfer and storage systems shall be designed and operated to prevent blockage by condensed coal tar products. When creosote/NAPL is transferred by a pressure system to storage or to shipping containers, transfer conditions shall be controlled to prevent splashes and excessive pressure in the system.

1.18.4 Drum and Container Handling

Drums or other container containing creosote/NAPL shall be closed while being moved or handled. Material from these containers shall be transferred carefully to prevent splashes, spills or other circumstances by which employees may come into contact with the creosote/NAPL.

1.18.5 Confined Space Entry Procedures

Any entry into the tanks or granular activate carbon units shall be when the tank/unit is empty and shall require a confined space entry permit. The Contractor must evaluate other site activities for the potential for confined spaces, identify those in the SSHP, and provide confined space entry procedures which comply with 29 CFR 1910.146 and EM 385-1-1 Section 6.I.

1.18.6 Hot Work

All tasks requiring hot work shall be identified. Requirement for hot work permits must be coordinated with the local fire department (refer to 1.18.2 above). Procedures, controls and work practices, including any associated monitoring, shall be specified and shall be in accordance with EM 385-1-1, Section 9 and 10.

1.18.7 Ignition Sources

Potential ignition sources shall be identified. Procedures, controls and work practices shall be specified and shall be in accordance with EM 385-1-1, Section 9 (see also 1.18.8 below).

1.18.8 Fire Protection and Prevention

Procedures, controls and work practices shall be specified and shall be in accordance with EM 385-1-1, Section 9.

1.18.9 Electrical Safety

Procedures, controls and work practices pertaining to electrical safety shall be specified and shall be in accordance with EM 385-1-1, Section 11.

1.18.10 Excavation and Trench Safety

Any tasks involving excavation and/or trenching shall be identified. Procedures, controls and work practices shall be specified and shall be in accordance with EM 385-1-1, Section 25.

1.18.11 Guarding of Machinery and Equipment

Machinery and equipment requiring guards shall be identified. Machinery and equipment guarding shall be in compliance with EM 385-1-1, Section 16.B.

1.18.12 Lockout/Tagout

Any tasks which require lockout/tagout shall be identified as well as procedures to be followed. Procedures shall be in compliance with EM 385-1-1, Section 12.

1.18.13 Fall Protection

Fall protection plans shall be prepared by the contractor to address any work above 6 feet elevation. Anticipated fall hazards include any maintenance to be performed on top of any of the tanks, GAC units, etc.

1.18.14 Hazard Communication

The Contractor shall address hazard communication for site workers in accordance with 29 CFR 1910.1200. Normally scheduled (e.g., weekly) site safety meetings, as well as any additional necessary meetings, shall be used to communicate site hazards.

1.18.15 Illumination

Sufficient lighting for all areas of the site (treatment plant pad, support zone, etc.) shall be provided to meet the requirements specified in EM 385-1-1, Table 7-1 and provide safe access when walking on site at night, if needed. Lights used to illuminate work areas shall have shields directing the light downward to reduce glare outside the facility.

1.18.16 Sanitation

Sanitation shall meet the requirements of EM 385-1-1, Section 2. Solvents shall not be used to clean hands (may cause skin absorption of creosote/NAPL). Employees shall wash their hands thoroughly with soap/mild detergent and water before using toilet facilities or eating. Sanitation facilities on site shall be specified.

1.18.17 Engineering Controls

Use of Engineering Controls, such as watering for dust suppression, to minimize generation of dust shall be specified in the SSHP.

Water supply and availability shall be discussed with regard to dust control and decontamination.

Noise control measures must be implemented where possible. Noise levels shall be in compliance with WAC 173-60 as well as for worker safety (29 CFR 1910.95). Refer also to EM 385-1-1.

1.18.18 Process Safety Management

Contractor must evaluate with regard to requirements of 29 CFR 1910.119.

1.18.19 Signs and Labels

The Contractor shall use signs and labels to clearly mark containerized waste materials, supplies, etc. All process piping shall be clearly labeled and warning signs posted for steam. Noise signs shall be in accordance with 29 CFR 1910.95 and creosote signs/labels shall be in accordance with NIOSH 78-107.

1.18.20 Waste Disposal

See Specification Section 02120 TRANSPORTATION AND DISPOSAL OF HAZARDOUS AND NON-HAZARDOUS WASTE and 01410 ENVIRONMENTAL PROTECTION.

1.18.21 Drilling

(Not used)

1.19 SITE CONTROL MEASURES

In order to prevent the spread of contamination and control the flow of personnel, vehicles, and materials, into and out of work areas, site control measures have been established and are described in the existing SSHP. The existing SSHP describes the methodology to be used by the Safety and Health Manager and SSHO in determining work zone designations and their modifications, and procedures to limit the spread of contamination. The existing SSHP includes procedures for the implementation and enforcement of safety and health rules for all persons on site, including employers, employees, outside Contractors, Government representatives, and visitors.

A security fence encircles the Wyckoff property. A fence and locking gate controls vehicle access to the Wyckoff site. Number codes entered onto a keypad are used to unlock the gate. Entry codes can be requested from EPA. Personnel shall enter through the personnel gate.

1.19.1 Work Zones

Initial anticipated work zone boundaries shall be defined for the Contractor. Work zone boundaries (exclusion zone, including restricted and regulated areas; contamination reduction zone; and support zone) and access points are established and the boundary delineation' s are included on the existing drawings and in the existing SSHP. Any recommended changes to the delineation of work zone boundaries shall be based on the contamination characterization data and the hazard/risk analysis to be performed as described in paragraph: HAZARD/RISK ANALYSIS. As work progresses and field conditions are monitored, work zone boundaries may be modified with approval of the Contracting Officer. Work zones shall be clearly identified for all site workers and visitors. A site map, showing work zone boundaries and locations of decontamination facilities, shall be posted in the on-site office. Work zones shall consist of the following:

a. Restricted Zone (RZ): The restricted zone is the former process area and groundwater treatment plant portions of the site. The primary contamination is located in the soil. Walking around the site requires that contractor and visitor personnel meeting the training requirements of this SSHP or are escorted by someone who is. Personnel must exit the restricted zone through the contamination reduction zone.

b. Exclusion Zone (EZ): The exclusion zone is the area where hazardous contamination is either known or expected to occur and the greatest potential for exposure exists. Entry into this area shall be controlled and exit may only be made through the CRZ. Other types of EZ' s could be areas where chemical hazards exist due to NAPL extraction activities. Current practice is as follows: the site has been designated into different work zones to control the possibility of exposure and spread of contaminants. The work zones have been defined based on the results of air sampling and surface soil sampling. (Refer to the existing CH2MHill Health and Safety Plan for work zone diagram and past air monitoring results.) The groundwater extraction wells (RPW1 through RPW7 and PW8) will be posted with "Authorized Personnel Only" signs at all times. When there is a potential for exposure, exclusion zones and contamination reduction zones will be established at these wells. Exclusion zones associated with temporary activities will also be established and clearly delineated, with a contamination reduction zone established at the edge of each exclusion zone. Since well probing and product pumping have the potential for exposure and are conducted on a regular basis at extraction wells RPW1, RPW2, RPW5, RPW6, and PW8, personnel fencing has been installed to permanently mark the boundaries of the zones. When the gate is closed and the sign marked "Exclusion Zone" is put on the gate, the fenced area becomes an exclusion zone. Then the gate is open and the sign is not present, the area is not an exclusion zone. Extraction wells RPW3, RPW4, and RPW7 are not probed and pumped regularly, and the depurator is not serviced frequently when operating; therefore, these areas do not have personnel fencing installed. Instead, they will be marked as exclusion zones with cones and hazard tape when there is a potential for exposure. The area around the depurator is not an exclusion zone when the depurator is open for less than five minutes for inspection only. Other temporary exclusion zones shall be set up (i.e., during waste disposal operations). The procedures for temporary exclusion zones and contamination reduction zones, signage and other activities are the same as for the other five extraction wells when there is a potential for exposure.

c. Contamination Reduction Zone (CRZ): The CRZ is the transition area between the Exclusion Zone and the Support Zone. The personnel and equipment decontamination areas shall be separate and unique areas located in the CRZ.

d. Support Zone (SZ): The Support Zone is defined as areas of the site, other than exclusion zones and contamination reduction zones, where workers do not have the potential to be exposed to hazardous substances or dangerous conditions resulting from hazardous waste operations. The Support Zone shall be secured against active or passive contamination. Site offices, parking areas, and other support facilities shall be located in the Support Zone.

1.19.2 Site Control Log

A log of personnel visiting, entering, or working on the site shall be maintained. The log shall include the following: date, name, agency or company, time entering and exiting the site, time entering and exiting the exclusion zone (if applicable), and personal protective equipment utilized. Before visitors are allowed to enter the Contamination Reduction Zone or Exclusion Zone, they shall show proof of current training, medical surveillance and respirator fit testing (if respirators are required for the tasks to be performed) and shall fill out the Certificate of Worker or Visitor Acknowledgment. This visitor information, including date, shall be recorded in the log. The Contractor is not required to "man" the log during the day, but shall review the log at the end of the day to determine whether all personnel visiting, entering, or working on the site have signed in and out.

All personnel entering the site must sign in on the appropriate company or construction sign in sheet located at the information kiosk near the site entrance. Personnel must sign in/out each time they leave the site, even if taking lunch or smoking breaks. At the end of the day the gate should be locked if the personnel leaving are the last to leave the site that day.

1.19.3 Communication

An employee alarm system that has adequate means of on and off site communication shall be provided and installed in accordance with 29 CFR 1910.65. The means of communication shall be able to be perceived above ambient noise or light levels by employees in the affected portions of the workplace. The signals shall be distinctive and recognizable as messages to evacuate or to perform critical operations. This includes the use of "walkie-talkies," radios, and telephones. The Contractor shall also address "hand signals" or other means of non-auditory communication necessary to effectively communicate safety hazards between site workers during field activities.

1.19.4 Site Security

The Contractor shall establish site security procedures that meet the work zone requirements given in 1.19.1. The contractor is responsible for overall security of the site.

1.20 PERSONAL HYGIENE AND DECONTAMINATION

Personnel entering the Exclusion or Contamination Reduction Zones or otherwise exposed or subject to exposure to hazardous chemical vapors, liquids, or contaminated solids shall adhere to the following personal hygiene and decontamination provisions. Decontamination shall be performed in the CRZ prior to entering the Support Zone from the Exclusion Zone. Chapter 10.0 of NIOSH Pub No. 85-115 shall be consulted when preparing recommendations for changes in existing decontamination procedures. A detailed discussion of personal hygiene and decontamination facilities and procedures to be followed by site workers shall be submitted as part of ant recommended changes to the existing SSHP. Employees shall be trained in the procedures and the procedures shall be enforced throughout site operations. Persons disregarding these provisions of the SSHP shall be barred from the site. Refer also to 01501 TEMPORARY FACILITIES AND CONTROLS for more information on site specific decontamination requirements.

1.20.1 Decontamination Facilities

The Contractor shall utilize the established a personnel decontamination facility that, at a minimum, includes containers to place disposable PPE (e.g., gloves, overalls, boot covers) and boot wash vessels.

1.20.2 Procedures

Minimum decontamination procedures specified in the existing SSHP. Available site information shall be reviewed and these procedures shall be expanded and/or revised for submittal as part of the SSHP amendment.

1.20.3 Decontamination Water Disposal

The Contractor shall collect all decontamination water used during the project. Collected decontamination water shall be processed through the onsite treatment plant. Reference 01501 TEMPORARY FACILITIES AND CONTROLS.

1.21 EQUIPMENT DECONTAMINATION

The existing decontamination pad may be used for lightly soiled vehicles and personnel. Vehicles and equipment used in the EZ shall be decontaminated in the CRZ prior to leaving the site. The procedures for decontamination of vehicles and equipment shall be addressed in the SSHP amendment.

1.21.1 Equipment Decontamination Facilities

The Contractor shall specify in the SSHP amendment the type of decontamination facilities that will be used on-site, to be consistent with 1.21 above. Refer also to 01501 TEMPORARY FACILITIES AND CONTROLS for more information on site specific decontamination requirements.

1.21.2 Procedures

Procedures for equipment decontamination shall be developed and utilized to prevent the spread of contamination into the SZ and off-site areas. These procedures shall address disposal of contaminated products and spent materials used on the site, including containers, fluids, etc. Any item taken into the EZ shall be assumed to be contaminated and shall be inspected and/or decontaminated before the item leaves the area. Vehicles, equipment, and materials shall be cleaned and decontaminated prior to leaving the site. Prior to exiting the site, vehicles and equipment shall be inspected to ensure the adequacy of decontamination.

1.22 EMERGENCY EQUIPMENT AND FIRST AID REQUIREMENTS

The SSHP amendment shall describe the emergency and first aid equipment to be available on-site. The SSHP amendment shall also include any equipment/materials/parts needed in case of a failure of any component of the treatment system. The following items, as a minimum, shall be maintained on-site and available for immediate use:

a. First aid equipment and supplies approved by the consulting physician.

b. Emergency eyewash equipment (may include small, manual, portable eyewashes that can be purchased from sampling and first aid supply stores) and showers (one in the vicinity of the tanks, at a minimum).

c. Fire extinguishers with a minimum rating of 2-A: 20-B:C shall be provided at site facilities and in all vehicles and at any other site locations where flammable or combustible materials present a fire risk.

d. Sorbent materials.

1.23 EMERGENCY RESPONSE AND CONTINGENCY PROCEDURES

An Emergency Response Plan, that meets the substantive requirements of 29 CFR 1910.120 (l) and 29 CFR 1926.65 (l) has been developed and implemented as a section of the existing SSHP. In the event of any emergency associated with remedial action, the Contractor shall, without delay, alert all on-site employees that there is an emergency situation; take action to remove or otherwise minimize the cause of the emergency; alert the Corps' on-site representative and Contracting Officer; and institute measures necessary to prevent repetition of the conditions or actions leading to, or resulting in, the emergency. Employees that are required to respond to hazardous emergency situations shall be trained in how to respond to such expected emergencies. The plan shall be reviewed and revised as necessary to reflect new or changing site conditions or information. Copies of the accepted SSHP and revisions shall be provided to the affected local emergency response agencies. The following elements, as a minimum, shall be addressed in the plan:

a. Pre-emergency planning. The local emergency response agencies shall be contacted and met with during preparation of the Emergency Response Plan. Agencies to be contacted include local fire, police, and rescue authorities with the jurisdiction and nearby medical facilities that may be utilized for emergency treatment of injured personnel. At these meetings, the agencies shall be notified of upcoming site activities and potential emergency situations. The response agencies' capabilities shall be ascertained and written response commitments obtained. The Contractor shall ensure the Emergency Response Plan for the site is compatible and integrated with the disaster, fire, and/or emergency response plans of local, state and Federal agencies.

b. Personnel roles, lines of authority, communications for emergencies.

c. Emergency recognition and prevention. This shall include a hazard operations/failure analysis for the treatment plant system in the form of a table with the component involved in failure, possible cause of failure, possible effects of failure, and controls to prevent failure or to minimize the impact of failure.

d. Site topography, layout, and prevailing weather conditions.

e. Criteria and procedures for site evacuation (emergency alerting procedures, employee alarm system, emergency PPE and equipment, safe distances, places of refuge, excavation routes, site security and control). Report to prearranged rally point to count heads in the event of an emergency.

f. Specific procedures for decontamination and medical treatment of injured personnel.

g. Route maps to nearest prenotified medical facility. Site-support vehicles shall be equipped with maps. At the beginning of project operations, drivers of the support vehicles shall become familiar with the emergency route and the travel time required.

h. Emergency alerting and response procedures including posted instructions and a list of names and telephone numbers of emergency contacts (physician, nearby medical facility, fire and police departments, ambulance service, Federal, state and local environmental agencies; as well as

Safety and Health Manager, the Site Superintendent, the Contracting Officer, and/or their alternates.)

i. Criteria for initiating community alert program, contacts, and responsibilities.

j. Procedures for reporting incidents to appropriate government agencies. In the event that an incident such as an explosion or fire, or a spill or release of toxic materials occurs during the course of the project, the appropriate government agencies shall be immediately notified. In addition, the Contracting Officer shall be verbally notified immediately and receive a written notification within 24 hours. The report shall include the following items:

(1) Name, organization, telephone number, and location of the contractor.

(2) Name and title of the person(s) reporting

(3) Date and time of the incident.

(4) Location of the incident, i.e., site location, facility name.

(5) Brief summary of the incident giving pertinent details including type of operation ongoing at the time of the incident.

(6) Cause of the incident, if known.

(7) Casualties (fatalities, disabling injuries)

(8) Details of any existing chemical hazard or contamination

(9) Estimated property damage, if applicable

(10) Nature of damage, effect on contract schedule

(11) Action taken to ensure safety and security

(12) Other damage or injuries sustained, public or private.

k. Procedures for critique of emergency response and follow-up.

1.24 CERTIFICATE OF WORKER/VISITOR ACKNOWLEDGEMENT

A copy of a Contractor-generated certificate of worker/visitor acknowledgement shall be completed and submitted for each visitor allowed to enter contamination reduction or exclusion zones, and for each employee, following the example certificate at the end of this section.

1.25 INSPECTIONS

The SSHO (for each shift) shall perform daily inspections of the job site and the work in progress to ensure compliance with EM 385-1-1, the Safety and Health Program, the SSHP and other occupational health and safety requirements of the contract, and to determine the effectiveness of the SSHP.

Procedures for correcting deficiencies (including actions, timetable and responsibilities) shall be described in the SSHP amendment. Follow-up inspections to ensure correction of deficiencies shall be conducted and documented. Daily safety inspection shall be documented in the Contractor's Daily Quality Control reports, and used to document the inspections, noting safety and health deficiencies, deficiencies in the effectiveness of the existing SSHP, and corrective actions taken. Each entry shall include the following: date, work area checked, employees present in work area, PPE and work equipment being used in each area, special safety and health issues and notes, and signature of preparer. In the event of an accident, the Contracting Officer shall be notified according to EM 385-1-1. Within 2 working days of any reportable accident, an Accident Report shall be completed on ENG Form 3394 and submitted.

1.26 SAFETY AND HEALTH PHASE-OUT REPORT

A Safety and Health Phase-Out Report shall be submitted within 14 working days following completion of the work, prior to final acceptance of the work. The following minimum information shall be included:

a. Summary of the overall performance of safety and health (accidents or incidents, including near misses, unusual events, lessons learned, etc.)

b. Final decontamination documentation including procedures and techniques used to decontaminate equipment, vehicles and on-site facilities.

c. Summary of exposure monitoring and air sampling accomplished during the project.

d. Signatures of Safety and Health Manager and SSHO.

EXAMPLE CERTIFICATE OF WORKER/VISITOR ACKNOWLEDGMENT

PROJECT NAME CONTRACT NO._
PROJECT ADDRESS
CONTRACTOR'S NAME
[EMPLOYEE'S][VISITOR'S] NAME

The contract for the above project requires the following: that you be provided with and complete formal and site-specific training; that you be supplied with proper personal protective equipment including respirators; that you be trained in its use; and that you receive a medical examination to evaluate your physical capacity to perform your assigned work tasks, under the environmental conditions expected, while wearing the required personal protective equipment. These things are to be done at no cost to you. By signing this certification, you are acknowledging that your employer has met these obligations to you.

I HAVE READ, UNDERSTAND AND AGREE TO FOLLOW THE SITE SAFETY AND HEALTH PLAN FOR THIS SITE.

Name Date

--- ---

FORMAL TRAINING: I have completed the following formal training courses that meet OSHA's requirements

Date Completed

40 hour: .....…._____
8 hour supervisory:....._____
8 hour refresher:.....…._____

SITE-SPECIFIC TRAINING: I have been provided and have completed the site-specific training required by this Contract. The Site Safety and Health Officer conducted the training. _____

RESPIRATORY PROTECTION: I have been trained in accordance with the criteria in [the Contractor's] [my Employer's] Respiratory Protection program. I have been trained in the proper work procedures and use and limitations of the respirator(s) I will wear. I have been trained in and will abide by the facial hair policy. _____

RESPIRATOR FIT-TEST TRAINING: I have been trained in the proper selection, fit, use, care, cleaning, and maintenance, and storage of the respirator(s) that I will wear. I have been fit-tested in accordance with the criteria in [the Contractor's] [my employer's] Respiratory Program and have received a satisfactory fit. [I have been assigned my individual respirator.] I have been taught how to properly perform positive and negative pressure fit-check upon donning negative pressure respirators each time._____

MEDICAL EXAMINATION: I have had a medical examination within the last twelve months that was paid for by my employer. The examination included: health history, pulmonary function tests and may have included an evaluation of a chest ax-ray. A physician made determination regarding my physical capacity to perform work tasks on the project while wearing protective equipment including a respirator. I was personally provided a copy and informed of the results of that examination. My employer's industrial hygienist evaluated the medical certification provided by the physician and checked the appropriate blank below. The physician determined that there:

__were no limitations to performing the required work tasks;

__were identified physical limitations to performing the required work tasks.

Date medical exam completed

[Employee's][Visitor's] Signature _____

Date _____

Printed Name _____

Social Security Number _____

Contractor's Site Safety and Health Officer Signature _____

Date _____

Printed Name _____

Social Security Number _____

PART 2 PRODUCTS (NOT APPLICABLE)

PART 3 EXECUTION (NOT APPLICABLE)

END OF SECTION

This page intentionally blank.

SECTION 01401

MANAGEMENT PLAN AND FIELD REPORTS

PART 1- GENERAL

1.1 SCOPE

Prior to receiving authority to proceed on the items of work under this Contract, the Contractor shall be required to submit for Government Approval an amendment to the existing Management Plan (MP). Field Reports and monthly Status Reports will be required as applicable. The existing MP is a compilation of more specific plans, which provide detailed and specific designs, procedures, methods, and layouts for accomplishment of the activities specific to hazardous and non-hazardous materials handling and treatment under this Contract. All work shall be performed in accordance with the approved plans and contract specifications. The requirements of this Section are in addition to the requirements of Section 01451B CONTRACTOR QUALITY CONTROL-SERVICES.

1.2 REFERENCES

CODE OF FEDERAL REGULATIONS (CFR)

29 CFR 1910 and 1926	Occupational Safety and Health Standards,

WASHINGTON ADMINISTRATIVE CODE (WAC)

WAC 173-340-360	Selection of cleanup actions
WAC 296-24	General Safety and Health Standards
WAC 296-62	General Occupational Health Standards
WAC 296-155	Safety Standards for Construction Work

ENGINEERING MANUAL (EM)

EM 385-1-1	(1996) Safety and Health Requirements Manual

ENGINEERING REGULATIONS (ER)

ER 385-1-92	(2000) Safety and Health Elements for HTRW Documents

1.3 SUBMITTALS

Submittals shall be in accordance with Section 01330, SUBMITTAL OF CONTRACT DATA except as modified herein.

1.3.1 Number of Each Document

Five copies of the MP shall be provided. All copies shall be delivered concurrently.

1.3.2 Binding

One copy shall be in reproducible format (bound in three ring binder.) All other documents shall be bound either in binders or permanently bound, and double sided. All submittals shall contain a minimum of 10 percent post consumer waste recycled paper in accordance with EPA specifications. Submittals to each office shall also be submitted in electronic format on one 3.5 inch high-density (1.4MB) DOS format disk in MS Word version 6.0 format or electronic CD.

1.3.3 Content

See descriptions of each document under this Section and supplemental or additional requirements under all sections for complete requirements for content. In addition, each copy of every Management Plan and Field Report shall be accompanied by the appropriate submittal checklist which has been checked off and signed by the Contractor's project manager or similarly qualified individual who is familiar with the requirements of the document and is responsible for preparing or reviewing the document contents.

1.3.4 Submittal Schedule

The entire MP amendment shall be submitted for Government Review and approval within 10 calendar days after award.

1.3.5 Government Review and Resubmittal

The Contractor shall allow the Government 7 calendar days to review the initial MP submittal. If any changes are required the Contractor shall resubmit a revised MP amendment within 3 calendar days.

1.4 MANAGEMENT PLAN

The Management Plan (MP) is intended to ensure that all safety and health, environmental, and chemical data acquisitions issues are suitably addressed. Until the MP amendment has been reviewed and approved by the Government, the Contractor may not assume total on-site work responsibility. (See Section 01120 CONTRACT TRANSITION AND INTERFACE for Contractor transition.) The MP shall be subject to review and modification at any time under this Contract to correct identified deficiencies or to reflect changes in any applicable regulations. The bulk of the MP is included as part of this contract; however, the Contractor shall add the additional necessary information as indicated in the MP provided.

1.4.1 Content

The MP shall contain as a minimum the following:

1.4.1.1 Work Plan (WP)

The Contractor shall prepare a WP amendment to the existing WP that defines any changes to the objectives of the existing Treatment Plant operation and maintenance activities, discusses Site Background and Existing Conditions; and includes a detailed description of the work to be performed for the various Treatment Plant operation and maintenance activities in accordance with the plans and specifications.

1.4.1.2 Staffing Plan

A Staffing Plan and Work Schedules shall be prepared in accordance with specification section 01145 SITE SPECIFIC SUPPLEMENTARY REQUIREMENTS and Section 01430 CONTRACTOR QUALIFICATIONS. Organizational charts shall also be included in accordance with Section 01430.

1.4.1.3 Cost and Performance Report Format

The format to be used for the Cost and Performance Report shall be provided in accordance with specification Section 01240 COST AND PERFORMANCE.

1.4.1.4 Site Safety and Health Plan (SSHP)

The Contractor shall prepare an amendment to the existing SSHP to ensure conformance with specification Section 01351 SAFETY, HEALTH AND EMERGENCY RESPONSE (HTRW/UST).

1.4.1.5 Environmental Protection Plan

The Contractor shall develop an amendment to the existing Environmental Protection Plan (EPP) which shall identify plans, procedures and organizations necessary to minimize, manage, control and avoid pollution of the environment during operation and maintenance activities. The plan covers all treatment plant operation/maintenance activities with consideration and incorporation of the contract objectives and operation and maintenance action responsibilities. The EPP shall be developed to be consistent with but not limited to requirements in specification Section 01451B, CONTRACTOR QUALITY CONTROL SERVICES, and, specifically, Section 01410 ENVIRONMENTAL PROTECTION.

1.4.1.6 Sampling and Analysis Plan

The Contractor shall prepare an amendment to the existing Sampling and Analysis Plan to ensure conformance with specification Section 01450 CHEMICAL DATA QUALITY CONTROL.

1.4.1.7 Contractor's Quality Control Plan

The Contractor shall develop a Contractor Quality Control Plan (CQCP) in accordance with specification Section 01451B CONTRACTOR QUALITY CONTROL-SERVICES and Section 01450 CHEMICAL DATA QUALITY CONTROL.

1.4.1.8 Data Management Plan and Communications Strategy

A Data Management Plan and Communications Strategy shall be developed as an amendment to the existing MP which details what data will be collected, and how data that will be collected, processed, stored, disseminated; specify which individuals are responsible for each part of the data management process; and describe procedures to be used for coordination with other on-site contractors during the remedial action.

1.4.1.9 Waste Management Plan

The Waste Management Plan (WMP) shall be prepared in accordance with Section 02120 TRANSPORTATION AND DISPOSAL OF HAZARDOUS AND NON-HAZARDOUS MATERIALS.

1.4.1.10 Spill Prevention and Emergency Response Plan

The Contractor shall accept the existing Spill Prevention and Emergency Response Plan (SPERP) for each operation and maintenance activity unless otherwise approved. The SPERP will identify plans, procedures and organizations necessary to minimize, avoid, manage, and respond to releases of hazardous materials during the various operation and maintenance activities.

1.5 FIELD NOTES AND REPORTS

The Contractor shall prepare and submit field notes for information, interim reports and a Final Field Report for Government review and approval as specified. .

1.5.1 Field Notes

All field notes shall be maintained in a bound book. **The Contractor shall document all field activities daily**, **location of all materials removed and/or installed, locations of other items discovered on site that still remain in place, samples collected, inspections performed, maintenance/repairs performed, quantities of waste accumulated, etc**. The field notes shall be of sufficient detail to reconstruct the day's activities. The field notes shall also include information required by specific specification sections as well as the following:

GENERAL INFORMATION
- Date, Time of Entry, Weather Conditions
- Name and Signature of Person making Entry
- Directions to the Contractor by the COR

CONTAMINATION INFORMATION
- Any Characteristic Odors (Diesel, Creosote, etc.)
- Evidence of Contamination Migration
- Condition of the silt fences and other erosion control measures used on site
- Water sheens or slicks including extent of spread and duration
- Cleanup actions taken, including deployment of absorbent pads and materials, and

recovery actions
- Air monitoring results

A copy of the field notes shall be submitted to the COR weekly with the Daily Contractor Quality Control Reports (see Sections 01450 and 01451B). The original field notes shall be submitted to the COR as part of the final field report.

1.5.2 Interim Reports

Critical documents require submittal for Government information prior to submittal of the Field Report. These documents include, but are not limited to: Manifesting documents, chemical analysis project and QA reports, accident reports, and other documents of a time-sensitive nature. The COR may request immediate submittal of any document deemed to be of a critical nature by the Government.

1.5.3 Final Report

The Contractor shall prepare and submit for Government review and approval a Final Field Report at the conclusion of the operation and maintenance contract period. Final payment will not be made until the Field Report is approved.

The Field Report shall detail all site actions and shall include:

(1) Brief description of site history and location as provided in project summary (Refer to Section 01710, EXISTING CONDITIONS),
(2) A description of the work effort performed;
(3) Chemical Data Final Report (Section 01450 CHEMICAL DATA QUALITY CONTROL)
(4) Health and Safety Phase-out Report (Section 01351 SAFETY, HEALTH, AND EMERGENCY RESPOSE (HTRW/UST)
(5) Quantities, types, and final disposition of all waste generated under this contract. This includes copies of the weight receipts, manifest packages, Off-site Compliance Certification, Certificates of Disposal, Packagings certifications, and any notices of Non-compliance and notices of violation (Section 02120 TRANSPORTATION AND DISPOSAL OF HAZARDOUS AND NON-HAZARDOUS MATERIALS)
(6) A description of any factors that may compromise the quality of the data or validity of the results;
(7) Operations Log (Section 01830 TREATMENT PLANT OPERATION AND MAINTENANCE)
(8) Copy of the field notes and any other documentation (including photographs) supporting Contractor activities at the site.

1.6 CONTRACTOR'S FILES

Two copies of the MP shall be maintained on each work site by the Contractor. The MP shall be made available for review and inspection by any authorized local, state, or Federal visitor. Site employees shall be guaranteed access to the MP at all times.

1.7 LOGS, REPORTS, AND RECORD KEEPING

The following logs, reports and records shall be developed, retained and submitted to the COR and/or entitled regulatory agencies upon request (unless otherwise noted in previous sections):

(1) Training logs including employees' printed names and signatures in addition to training subject and date or copy of applicable training certificate;
(2) Daily safety inspection logs;
(3) Employee/visitor register;
(4) Medical opinions/certifications;
(5) Environmental and personal exposure monitoring records;
(6) Phaseout reports (final decontamination verification certificates, summary of air monitoring data, final medical certificates, etc.); and,
(7) A copy of all State licensing certificates required to conduct all required activities.

All personnel exposure and medical monitoring records shall be maintained in accordance with applicable OSHA standards, 29 CFR 1910 and 1926 (including OHSA 200 log and accident/first aid reports.) and WAC 296-62-300 Part P.

END OF SECTION

SECTION 01410

ENVIRONMENTAL PROTECTION

1.1 GENERAL REQUIREMENTS

The Contractor shall perform the work minimizing environmental pollution and damage as the result of operations and maintenance activities. Environmental pollution and damage include the presence of chemical, physical, or biological elements or agents which adversely affect human health or welfare; unfavorably alter ecological balances of importance to human life; affect other species of importance to humankind; or degrade the utility of the environment for aesthetic, cultural and/or historical purposes. The control of environmental pollution and damage requires consideration of land, water, and air, and includes management of visual aesthetics, noise, solid waste, as well as other pollutants. The environmental resources within the project boundaries and those affected outside the limits of permanent work shall be protected during the entire duration of this contract.

1.1.1 Subcontractors

The Contractor shall ensure compliance with this section by subcontractors.

1.1.2 Environmental Protection Plan

The Contractor shall review the existing environmental protection plan (EPP) for the Treatment Plant O&M contract and prepare and submit an amended EPP as part of the Management Plan (See 01401 MANAGEMENT PLAN AND FIELD REPORTS). The purpose of the Environmental Protection Plan is to present a comprehensive overview of the known or potential environmental issues which the Contractor must address during site activities. Approval of the Contractor's plan will not relieve the Contractor of responsibility for adequate and continuing control of pollutants and other environmental protection measures. The environmental protection plan shall include, but shall not be limited to, the following:

a. Name(s) of person(s) within the Contractor's organization who is (are) responsible for ensuring adherence to the Environmental Protection Plan, including the name of the individual who will report any spills or hazardous substance releases and who will follow up with complete documentation. This individual shall immediately notify the Contracting Officer and local fire department in addition to the legally required Federal, State, and local reporting channels (including the National Response Center 1-800-424-8802) if a reportable quantity is released to the environment. A list of required reporting channels and telephone numbers shall be provided.

b. Name(s) and qualifications of person(s) responsible for training the Contractor's personnel.

c. Description of the Contractor's environmental protection personnel training program, including spill control/response.

d. Spill Prevention Control and Countermeasure Plan which complies with 40 CFR 112.7 and addresses the following items:

(1) A prediction of the direction, rate of flow, and total quantity of oil and other hazardous materials which could be discharged from the facility as a result of each major type of potential equipment failure.
(2) Appropriate containment and/or diversionary structures or equipment to prevent discharged oil or other hazardous material form reaching a navigable water course shall be provided and identified in this plan.
(3) Facility drainage
(4) Bulk storage tanks
(5) Facility transfer operations, pumping, and in-plant process
(6) Facility tank car and tank truck loading/unloading procedures (fuel delivery and hazardous waste removal)
(7) Inspections and records
(8) Security
(9) Personnel, training, and spill prevention procedures
(10) Written spill and discharge containment/control procedures to be implemented. Procedures shall describe control measures and material to be used (e.g. booms, vermiculite); list of materials and equipment to be immediately available on site, tailored to cleanup work of the potential hazard(s) identified; location of spill control material; off-site support/response personnel; personal protective equipment required to clean up spills; disposal of contaminated material.

1.1.3 Permits

No permits are required to be obtained by the Contractor for work conducted on Wyckoff facility; however, substantive requirements of the following regulations must be met:

State of Washington Model Toxics Control Act (WAC 173-340)
State of Washington Dangerous Waste Regulations (WAC 173-303)
State of Washington Minimum Functional Standards for Solid Waste Handling (WAC 173-304)
Resource Conservation and Recovery Act (40 CFR 261, 264, and 268)
Off-site Disposal Rule (40 CFR 300.440)
Federal Water Pollution Control Act/Clean Water Act (40 CFR 100-149)
National Pollutant Discharge Elimination System (WAC 173-220)
State of Washington Water Quality Standards for Surface Waters (WAC 173-201A)
State of Washington Sediment Management Standards (WAC 173-204)
Clean Air Act (40 CFR 52.21, 60, and 63)
Regulations I and III of the Puget Sound Clean Air Agency (WAC 173-400 and 460)
Oil Pollution Control Act of 1990: Facilities Transferring Oil or Hazardous Materials in Bulk (33 CFR 154); Oil Pollution Prevention (40 CFR 112); (WAC 173-180A, B, C, D)
Federal Endangered Species Act (50 CFR 200, 402)
U.S. Fish and Wildlife Coordination Act (16 USC 661 et seq.)
Minimum Standards for Construction and Maintenance of Water Wells (WAC 173-160)
Underground Injection Control Program (WAC 173-218)

General Regulations for Air Contaminant Sources (WAC 173-400)
Kitsap County Shoreline Master Plan (WAC 173-19-2604)

The Contractor is responsible for obtaining permits for any work conducted off the Wyckoff facility.

1.1.3.1 Discharge water as required by the substantive requirements of the existing NPDES permit for the current groundwater treatment plant discharge, and in a manner that will not cause erosion or flooding, or otherwise damage existing facilities, completed Work, or adjacent property.

1.1.4 Meetings

The Contractor shall meet with representatives of the CO to alter the environmental protection plan as needed for compliance with the environmental pollution control program.

1.1.5 Notification

The CO will notify the Contractor in writing of any observed noncompliance with the previously mentioned Federal, state, or local laws or regulations, permits, and other elements of the Contractor's environmental protection plan. The Contractor shall, after receipt of such notice, inform the CO of proposed corrective action and take such action when approved or sooner if imminent hazard exists. If the Contractor fails to comply promptly, the CO may issue an order stopping all or part of the work until satisfactory corrective action has been taken. No time extensions shall be granted or costs or damages allowed to the Contractor for any such suspensions.

1.1.6 Litigation

If work is suspended, delayed, or interrupted due to a court order of competent jurisdiction, the CO will determine whether the order is due in any part to the acts or omissions of the Contractor, or subcontractors at any tier, not required by the terms of the contract. If it is determined that the order is not due to Contractor's failing, such suspension, delay, or interruption shall be considered as ordered by the CO in the administration of the contract under the contract clause SUSPENSION OF WORK.

1.1.7 Previously Used Equipment

The Contractor shall thoroughly clean all mobile equipment previously used at other sites before it is brought into the work areas, ensuring that soil residuals are removed and that egg deposits from plant pests are not present; the Contractor shall consult with the USDA jurisdictional office for additional cleaning requirements.

1.1.8 Payment

No separate payment will be made for work covered under this section; all costs associated with this section shall be included in the contract unit and/or lump sum prices in the Schedule (Section B).

1.2 WORK AREA LIMITS

1.2.1 Contractor Facilities And Work Areas

The Contractor's work areas will be in accordance with Section 01351 and Section 01501.

1.3 PROTECTION OF WATER RESOURCES

The Contractor shall keep operations and maintenance activities under surveillance, management, and control to avoid pollution of surface and ground waters. Toxic or hazardous chemicals shall not be applied to soil or vegetation when such application may cause contamination of surface or groundwater resources. Monitoring of water areas affected by operations and maintenance activities will not be the Contractor's responsibility. However, the Contractor shall use best management practices to avoid and control the release of contaminants to marine waters during operations and maintenance activities. Refer to Section 01145, SITE SPECIFIC SUPPLEMENTARY REQUIREMENTS.

1.3.1 Emergency Response

The Government recognizes that some of the Contractor’ s activities may result in releases of existing contamination to marine waters. In those instances, the Contractor shall advise the COR of such a release. At the discretion of the COR, the Contractor shall institute an emergency response effort to include the deployment of additional sorbent booms, sorbent sweeps, or the equivalent to remediate the emergency.

1.3.1.1 Control of Pollutants

The Contractor shall take all precautions necessary to prevent the introduction of pollutants, either directly or indirectly (non-point sources) to surface waters, including Eagle Harbor and Puget Sound. Pollutants may not be carried to receiving waters in stormwater runoff from such sources as sediment from remedial actions, oil and grease from motor vehicles and equipment, marine plant and equipment, and stockpiles, refuse, etc.

1.3.1.2 Contractor Controls

The Contractor shall keep operations and maintenance activities under surveillance, management, and control to avoid pollution of surface water.

1.3.1.3 Best Management Practices

Contractor shall utilize Best Management Practices (BMPs) to minimize the effects of its activities. Examples of BMPs for non-point source pollution can be found in the EPA document, Guidance Specifying Management Measures For Sources of Non point Pollution in Coastal Waters.

1.3.2 Protection Of Aquatic Resources

1.3.2.1 Fish And Wildlife

The Contractor shall minimize interference with, disturbance to, and damage of fish and wildlife.

1.3.2.2 Eelgrass Beds

The Contractor shall not anchor, ground barges, excavate, or generate excessive prop wash in eelgrass beds or kelp beds unless approved by COR. The eelgrass beds are at approximately – 0.5 MLLW and parallel the eastern and northern shoreline of the facility. Eelgrass is present along the intertidal area in the vicinity of the waste-water treatment plant.

1.3.2.3 Control Of Materials Entering Marine Waters

No toxic material or petroleum shall be washed into or permitted to enter marine waters. At all times in performing the work, steps shall be taken as required to prevent interference or disturbance to safe passage to spawning areas of anadromous and other fish species of concern (i.e., surf smelt). Visual observation in the project area will be performed by the Contracting Officer and by the Contractor. If any distressed or dead fish or wildlife are observed by the Contractor, he shall stop work and immediately notify the Contracting Officer.

1.4 AIR RESOURCES

Equipment operation and activities or processes performed by the Contractor in accomplishing the specified operations and maintenance activities shall be in accordance with Washington State rules and all Federal emission and performance laws and standards. Ambient Air Quality Standards set by the Environmental Protection Agency shall be maintained. Air monitoring shall be in accordance with Section 01450 CHEMICAL DATA QUALITY CONTROL.

1.4.1 Particulates

Dust particles; aerosols and gaseous by-products from operations and maintenance activities; and processing and preparation of materials; shall be controlled at all times, including weekends, holidays, and hours when work is not in progress.

1.4.2 Hydrocarbons And Carbon Monoxide

Hydrocarbons and carbon monoxide emissions from equipment shall be controlled to Federal and state allowable limits at all times.

1.4.3 Odors

Odors shall be controlled at all times for all operation and maintenance activities, processing, and preparation of materials.

1.5 WASTE DISPOSAL

Disposal of wastes shall be as specified in Section 02120 - TRANSPORTATION AND DISPOSAL OF HAZARDOUS AND NONHAZARDOUS MATERIALS and as specified below.

1.5.1 Solid Wastes

Solid wastes shall be containerized and disposed offsite. Handling and disposal shall be conducted to prevent contamination. The Contractor shall comply with Federal, state, and local laws and regulations pertaining to the disposal of solid wastes and the use of landfill areas.

1.5.2 Chemical Wastes

Disposal of chemical wastes shall be as specified in Section 02120 - TRANSPORTATION AND DISPOSAL OF HAZARDOUS AND NONHAZARDOUS MATERIALS

1.5.3 Hazardous Wastes

Hazardous wastes or dangerous wastes generated during operations and maintenance activities will be handled and disposed in accordance with the Transportation and Disposal of Waste Plan in the Management Plan submitted by the Contractor and consistent with specifications in Section 02120, TRANSPORTATION AND DISPOSAL OF HAZARDOUS AND NONHAZARDOUS MATERIALS. Cleanup costs due to spills resulting from Contractor negligence shall be the Contractor's responsibility.

1.5.4 Burning

The use of burning at the project site for the disposal of refuse and debris will not be permitted.

1.6 NATURAL, HISTORICAL, ARCHAEOLOGICAL, AND CULTURAL RESOURCES

1.6.1 Sensitive Species

The Contractor shall ensure that actions carried out in performance of this project do not jeopardize threatened and endangered species. Listed and candidate threatened and endangered species identified at the Wyckoff/Eagle Harbor Superfund Site are included in Appendix A at the end of this Section.

1.7 MAINTENANCE OF POLLUTION CONTROL FACILITIES

The Contractor shall maintain permanent and temporary pollution control facilities and devices for the duration of the contract or for that length of time operations and maintenance activities create the particular pollutant.

1.7.1 Training Of Contractor Personnel

The Contractor's personnel shall be trained in all phases of environmental protection. The training shall include methods of detecting and avoiding pollution, familiarization with pollution standards, both statutory and contractual, and installation and care of devices, and instruments required for monitoring purposes to ensure adequate and continuous environmental pollution control.

APPENDIX 01410-A

PRELIMINARY LIST OF ENDANGERED AND THREATENED SPECIES THAT MAY OCCUR IN OR BE AFFECTED BY PROJECTS IN EAGLE HARBOR SUBTIDAL AND INTERTIDAL HABITAT

Several threatened and endangered fish species or races potentially inhabit Eagle Harbor. Preliminary coordination has occurred with U.S. Fish and Wildlife Service, National Marine Fisheries Service, Suquamish Tribe, Washington Dept. of Ecology, and Division of Natural Resources. The particular aquatic species of concern are as follows:

Puget Sound Chinook Salmon	(*Oncorhynchus tshawytscha*)
Bull Trout	(*Salvelinus confluentis*)
Steller Sea Lion	(*Eumetopias jubatus*)
Humpback Whale	(*Megaptera novaeangliae*)
Bald Eagle	(*Haliaeetus leucocephalus*)
Leatherback Sea Turtle	(*Dermochelys coriacea*)
Marbled Murrelet	(*Brachyramphus marmoratus marmoratus*)

END OF SECTION

SECTION 01430

CONTRACTOR QUALIFICATIONS

PART 1 GENERAL

1.1 GENERAL

The Contractor shall provide operating and maintenance staff with the minimum qualifications specified under this section.

1.2 RELATED SECTIONS

1.2.1 The Contractor shall provide a quality control system including CQC organization in accordance with Section 01451B, CONTRACTOR QUALITY CONTROL - SERVICES.

1.2.2 Requirements for daily staffing level and operating hours are specified under Section 01145 SITE SPECIFIC SUPPLEMENTARY REQUIREMENTS.

1.3 SUBMITTALS

Submittals required by this section shall be for Government approval (GA) or for information only (FIO), and shall be submitted as stated below in accordance with Section 01330, SUBMITTAL OF CONTRACT DATA.

Data

Staffing Plan; GA.

Organization Charts, GA

Submit for review not later than 7 days after contract award.

1.4 CONTRACTOR FUNCTIONS

The Contractor shall provide all on-site and home office support staff necessary to coordinate, oversee, and perform the work tasks specified in the CONTRACT DOCUMENTS. In addition to providing operator(s), the Contractor shall provide support staff, which may include electricians, plumbers, painters, control equipment specialists, welders, laborers, clerical, procurement, accountants, managers, engineers, scientists and all other support staff and services the Contractor determines as necessary for the project.

1.5 STAFF QUALIFICATIONS

1.5.1 Contract Manager. The Contractor shall provide a Contract Manager (CM) to oversee and coordinate the work described in the CONTRACT DOCUMENTS. The name and resume of this person and at least one alternate who shall act for the Contractor when the Contract Manager is absent shall be designated in writing to the Contracting Officer (CO) prior to the contract start date.

1.5.1.1 The Contract Manager or alternate(s) shall have full authority to act for the Contractor on all matters relating to daily execution of the contract.

1.5.2 Personnel Qualifications

1.5.2.1 General

(a) The Contract Manager and all on-site personnel must be able to speak, read, write and understand English. All personnel must understand and follow health and safety procedures and follow other instructions. All on-site Contractor personnel shall have writing skills that, at a minimum, allows them to fill out forms, invoices, maintain a legible operations log, Maintenance Inspection Cards, and prepare operation and maintenance reports.

(b) Certifications shall be maintained up-to-date and valid at all times. Certification records shall be maintained on file and readily available for Contracting Officer to review upon request.

(c) The Contractor shall not employ persons for work on this Contract if such employee is identified to the Contractor by the Contracting Officer as a potential threat to the health, safety, security, general well-being or operational mission of the facility.

(d) The Contractor shall ensure that employees have prior work experience in the crafts/trades to perform duties of the contract, including any support personnel, in accordance with all applicable codes and regulations.

(e) Laboratory personnel and operators performing sampling or laboratory analyses shall have appropriate waste water sampling and laboratory analysis experience and expertise. Refer to Section 01450 CHEMICAL DATA QUALITY CONTROL for additional requirements for these personnel.

(f) Contractor's on-site personnel shall be easily recognized by wearing distinctive clothing or badges bearing the name of the company and the employee's name.

(g) Employee Termination

If a Contractor employee resigns or is terminated, the Contracting Officer or designated representative shall be so notified at the earliest opportunity, but in no case later than the start of the succeeding workday.

(h) Access Control

Contractor personnel shall be instructed to present identification credential upon request by proper authority as established by the Contracting Officer.

1.5.2.2 Plant Operator

The plant operators shall meet the following minimum qualifications:

1) Have the ability to read technical specifications and drawings, and a minimum of five years experience in operation and maintenance of wastewater/groundwater treatment plants, and contaminant extraction systems.

2) Have 40-hour OSHA Hazardous Waste Operations training, and be current with 8-hour Refresher courses. In addition, all operators shall be trained in any specific OSHA-regulated activities, such as lockout/tagout or confined space entry, as needed.

3) Be trained or experienced in collection, preservation, and general handling of water samples.

1.6 SUBMITTAL REQUIREMENTS

The Contractor shall furnish a staffing plan and organization chart describing the labor requirements and organization proposed to accomplish the work tasks. Refer to Section 01145, paragraph "Staffing" for additional requirements for daily staffing levels.

1.6.1 Staffing Plan

The Staffing Plan shall describe duties, responsibilities, and qualifications of on-site, off-site, including on-call personnel, and subcontractors proposed for support services for this project. Include the following:

(a) The name, qualifications (in resume format), duties, responsibilities, and authorities of the Contractor's Contract Manager, and other operating staff.

(b) A breakdown showing manual and non-manual personnel.

(c) Employee Listing

The Contractor shall submit a complete listing of Contractor personnel, including job title and identification credential number, who will be working on the project. This listing shall be updated as needed to insure that the Government has been notified of any changes of Contractor Personnel in advance of new personnel engaging in work on the project.

1.6.2 Organization Chart

The Organization Chart shall include telephone numbers, location and addresses of all personnel with oversight responsibilities, on-site duties, and on-call duties, including subcontractors showing relationship to the Contractor's organizational structure. This chart shall be updated as needed to insure that the Government has the current telephone numbers, location and addresses of the specified personnel in advance of new personnel engaging in work on the project.

PART 2 and 3 (Not Used)

END OF SECTION

SECTION 01450

CHEMICAL DATA QUALITY CONTROL

PART 1 GENERAL

This Section describes the Contractor's chemical data quality control responsibilities for the duration of the contract period. The operation of the Groundwater Treatment Plant (GWTP), and water extraction system will be an integral part of the overall Contractor responsibilities for the Groundwater Treatment Plant Operations and Maintenance contract. General site data and the substantive requirements of the NPDES permit for the site are provided in Attachment A.

1.1 REFERENCES

The publications listed below form a part of this specification to the extent referenced. The publications are referred to in the text by basic designation only.

CODE OF FEDERAL REGULATIONS (CFR)

40 CFR 261	Identification and Listing of Hazardous Waste
40 CFR 262	Standards Applicable to Generators of Hazardous Waste
40 CFR 266	Boiler and Industrial Furnace Standards, Subpart H
40 CFR 268	Land Disposal Restrictions
49 CFR 172	Hazardous Material Table, Special Provisions, Hazardous Material Communications, Emergency Response Information, and Training Requirements
49 CFR 178	Specifications for Packaging

U.S. ARMY CORPS OF ENGINEER MANUAL (EM)

EM 200-1-1	(1994) Validation of Analytical Chemistry Laboratories
EM 200-1-2	(1998) Technical Project Planning Process
EM 200-1-3	(2001) Requirements for the Preparation of Sampling and Analysis Plans
EM 200-1-3 Appendix I	(2001) Shell for Analytical Chemistry Requirements
EM 200-1-6	(1997) Chemical Quality Assurance

U.S. ARMY CORPS OF ENGINEERS ENGINEER MANUAL (ER)

ER 1110-1-263	(1998) Data Quality Management for Hazardous, Toxic, Radioactive Waste Remedial Activities

ENVIRONMENTAL PROTECTION AGENCY (EPA)

EPA-600/4-79-020	(1983) Methods for Chemical Analysis of Water and Wastes
EPA 540/P-87/001	(1987) A Compendium of Superfund Field Operations Methods
EPA 540/R 94-012	(1994) Contract Laboratory Program National Functional Guidelines for Inorganic Data Review
EPA 540/R 94-013	(1994) Contract Laboratory Program National Functional Guidelines for Organic Data Review
EPA SW-846	(Rev O; updates I, II, IIA, IIB, and III) Test Methods for Evaluating Solid Waste (Vol IA, IB, IC, and II)

1.2 ACRONYMS

ASTM	American Society for Testing and Materials
CLP	Contract Laboratory Program
COPC	chemical of potential concern
CPT	cone penetrometer testing
DCQCR	daily chemical quality control report
DNAPL	dense nonaqueous-phase liquid
DQO	data quality objective
Ecology	Washington State Department of Ecology
EPA	U.S. Environmental Protection Agency
FSP	field sampling plan
IC	Inorganic Carbon
GC/FID	gas chromatography/flame ionization detector
GSA	General Services Administration
GWTP	Groundwater Treatment Plant
LCS	laboratory control sample
LNAPL	light nonaqueous-phase liquid
MDL	method detection limit
MQL	method quantitation limit
MRL	method reporting limit
MS/MSD	matrix spike/matrix spike duplicate
NAPL	nonaqueous-phase liquid
OU	operable unit
PAH	polycyclic aromatic hydrocarbon
PCP	pentachlorophenol
PID	photoionization detector
PM	project manager

QA/QC	quality assurance/quality control
QAPP	quality assurance project plan
RI	remedial investigation
RI/FS	remedial investigation/feasibility study
RPD	relative percent difference
SAP	sampling and analysis plan
SOP	standard operating procedure
SVOC	semivolatile organic compound
TOC	total organic carbon
TPH	total petroleum hydrocarbon
USACE	U.S. Army Corps of Engineers

The definition of acronyms used by the Contractor that pertain to chemical data quality control shall be clearly defined for all contract related products and communications.

1.3 MEASUREMENT AND PAYMENT

Separate payment will not be made for providing and maintaining the chemical data quality requirements including the chemical data quality management, minimum chemical data reporting requirements, and chemical data quality submittal requirements; these costs shall be included in the applicable unit prices or lump sum prices contained in the Schedule and as described in Section 01270 MEASUREMENT AND PAYMENT.

1.4 CHEMISTRY REQUIREMENTS

Chemical Data Quality Control (CDQC) shall be as defined in ER 1110-1-263; this ER, which integrates USACE guidance on the subject, shall be supplemented by EM 200-1-6 for detail technical guidance on CDQC.

1.4.1 Site History

SITE LOCATION AND DESCRIPTION

The Wyckoff/Eagle Harbor Superfund site is located on Bainbridge Island, Washington, on the southern shoreline near the entrance to Eagle Harbor. The site has been divided into four operable units (OUs):

- Wyckoff Soil OU: surface and subsurface soil extending to the maximum elevation of the water table (or other fluid boundary) including the Former Process Area and the Log Peeler / Log Storage area

- Wyckoff Groundwater OU: subsurface soil and groundwater beneath the maximum elevation of the water table (or other fluid boundary) extending toward Eagle Harbor and including groundwater contaminated by fluids migrating from onshore from the Former Process Area and the Log Peeler / Log Storage Area

- West Harbor OU: intertidal and subtidal surface sediments located within the West Harbor OU boundary

- East Harbor OU: intertidal and subtidal surface sediments located within the East Harbor OU boundary

The Wyckoff property occupies approximately 57 acres (about 18 of which encompass the Soil OU), including a spit with about 0.8 miles of shoreline extending northward into Eagle Harbor. The spit was extended and filled at least twice prior to the 1950s, and was the location of wood treatment activities that have caused the current soil and groundwater contamination.

The Wyckoff Soil and Groundwater OUs occupy a relatively flat lowland and intertidal area bounded by a densely vegetated bluff on the south. The lowland area has an average elevation of approximately 10 feet NGVD while the hillside area rises to elevations above 200 feet. A small stream flows north from the hills above the western arm of the property into a culvert that discharges into Eagle Harbor. The north and west portions of the spit are bounded by Eagle Harbor, and Puget Sound abuts the eastern margin of the spit.

SITE HISTORY

Prior to 1904, the Wyckoff property was owned by a sand mining operation, and a brickyard. From 1904 through 1988, the site was used for the treatment of wood products (e.g., railroad ties and trestles, telephone poles, pilings, docks and piers) by a succession of owners and companies. Chemicals used at the site include creosote, pentachlorophenol (PCP), solvents, gasoline, antifreeze, fuel, waste oil and lubricants. These chemicals were stored in above-ground storage tanks, conveyed through above- and below-ground piping, disposed in sumps, spilled and buried on site.

EPA began an investigation of the property in 1971, and the site was subsequently placed on the National Priority List (in 1987). In 1988, the Wyckoff Company ceased all operations on the property. In 1993, EPA assumed management of the soil and groundwater OUs, and in 1994 the assets of the former Wyckoff Company (now Pacific Sound Resources) were placed into an environmental trust.

All wood-treatment structures in the lowland portion of the site, including buildings, foundations, tanks, pipelines and sumps, were removed between 1988 and 1997. The West Dock was removed in December 1998. A groundwater treatment plant, monitoring and extraction wells, and a conveyance piping system for contaminant recovery and control are in place and in use.

In 1989, Pacific Sound Resources (PSR) completed the design and construction of the existing GWTP in response to EPA's Consent Decree No. 1088-02-17-106. EPA subsequently assumed responsibility for operation and maintenance of the GWTP and the groundwater extraction system in November 1993. At EPA's direction, on-site O&M contractors have made several substantial changes to the treatment and extraction systems in an effort to prevent deterioration of the existing systems and minimize potential releases of hazardous materials to the environment.

1.4.2 Data Quality Objectives (DQO)

Sample acquisition, chemical analysis and chemical parameter measurements shall be performed so that the resulting data meet and support data use requirements for three primary objectives:

- Performance monitoring to evaluate system efficiency and performance through measurement of specific parameters of influent and effluent of selected process units.

- Chemical compliance monitoring to determine if the discharge limitations required by the Groundwater OU ROD are being met through the quality of effluent being discharged to Puget Sound.

- Biological compliance monitoring (biomonitoring) to demonstrate compliance with Washington State Whole Effluent Toxicity Testing and Limits (WAC 173-205) through measurement of acute and chronic toxicity affects of effluent on selected aquatic organisms.

Chemical data shall be acquired, documented, verified and reported to ensure that the specified precision, accuracy, representativeness, comparability, completeness and sensitivity requirements are achieved.

1.4.3 Sampling, Analysis and Measurement

1.4.3.1 Performance Monitoring Samples

The Contractor shall collect weekly water samples from seven selected sampling points within the GWTP. Table 1 provides a description of each sampling location. Samples will be collected on Monday of each week. Samples shall be collected on alternate days during holidays or if plant activities interfere with the sampling schedule. The performance monitoring schedule and list of parameters to be analyzed for at each sampling location is presented in Table 2.

Sample ports consist of ball valves are located at every sampling location except for Aeration Tank, SP-5. At these sampling ports, the ball valve shall be opened and flushed for approximately 30 seconds prior to sampling. Grab samples shall be collected by filling sample jars directly from the valve at the sampling port.

At SP-5, a sample shall be collected from the approximate center of the tank under at least 1 foot of water using a plastic container attached to an extension pole. The container will be rinsed before and after sampling with plant water to clean solids from the container. This sample shall be analyzed on-site for physical parameters only. The number and type of performance monitoring analyses and the number of analyses to be performed each week is presented in Table 3. Sample handling requirements for performance monitoring is presented in Table 4.

Samples analyzed by the off-site laboratory shall be conducted by a Government laboratory. Analyses listed in Tables 3 and 4 for on-site analysis are the responsibility of the Contractor.

1.4.3.2 Compliance Monitoring Samples

GWTP final effluent shall be samples once a week for chemical compliance monitoring. Samples shall be collected on Monday of each week, except holidays when samples shall be collected and shipped on Tuesday. A 24-hour composite sample is required for compliance PAH, PCP and total suspended solids analysis. Partially composited samples shall be maintained at 4ºC during the 24-hour period. A grab sample is required for total dissolved solids. One field duplicate sample shall be collected every 4 weeks. Field blanks and extra volume for MS/MSD shall be collected once every 4 weeks. MS/MSD samples shall be collected only for analyses of PAHs and PCP.

Grab samples shall be collected from sampling location SP-11, which is a sample tap located on the pipe that drains the effluent storage tank, Tank 303. Composite samples shall be collected using the existing automated sampler. Prior to composite sampling, temperature, pH, and dissolved oxygen shall

be measured at the sampling port. The automated composite sampling unit shall be properly programmed to collect 1/8th of the total volume required every 3 hours for 24 hours. Table 5 presents the volumes required for primary samples, field duplicates and MS/MSDs. The sampler shall be periodically observed when operators are on duty to ensure it is operation properly. Once composite sampling is complete, individual sample jars shall be filled directly from the composite sampling container. Field parameters shall be measured again from a separate container, and a grab sample for total dissolved solids shall be collected.

The chemical compliance monitoring sampling schedule is presented in Table 6 with sample handling requirements described in Table 7.

1.4.3.3 Biological Compliance Monitoring Samples

GWTP final effluent samples for biomonitoring will be collected using the existing automated composite sampler connected to the 4-inch diameter steel pipe that drains final effluent tank T-303. The capacity of the automated sampler is 5 gallons. The total volume of sample required for biomonitoring is as much as 7.5 gallons. An additional 5 gallons shall be required for split samples that shall be collected for chemical compliance monitoring (see previous section). Consequently, the automated sampler shall be programmed to collect 5 gallons during an 8-hour period, so that an accumulated volume of 15 gallons shall be collected over a 24-hour period. Each sample container (for both biomonitoring and chemical analyses) shall be filled to 1/3 of the total volume from each 5-gallon composite sample.

Specific test procedures and protocols are presented in Table 8. Specific sample container and sample handling requirements are presented in Table 9. Samples shall be shipped via overnight courier so that analyses can begin with the 36-hour holding time specified by the biomonitoring methods. Analyses of biomonitoring samples shall be conducted at the Contractor's laboratory.

1.4.3.4 Borrow or Fill Material Samples

Not used.

1.4.3.5 Investigation Derived Waste Samples

Not used.

1.4.3.6 Waste Characterization Samples

Material shipping manifesting shall be in accordance with 40 CFR 261, 40 CFR 262, 40 CFR 268, 49 CFR 172, and 49 CFR 178. Manifesting samples shall be collected and analyzed according to Section 02120 TRANSPORTATION AND DISPOSAL OF HAZARDOUS AND NON-HAZARDOUS MATERIALS.

1.4.3.7 Field Instrumentation and Methods

Descriptions of the use of selected field monitoring instrumentation shall be consistent with the reference A Compendium of Superfund Field Operations Methods (EPA/540/P-87/001; December 1987). The instruments, equipment and field analytical methods used during this project shall be operated, calibrated and maintained according to the manufacture's guidelines and recommendations. Operation, calibration and maintenance shall be performed by personnel who have been properly

trained in these procedures. A routine schedule and record of instrument calibration and maintenance shall be maintained throughout the duration of this project.

The specific calibration procedures and calibration frequency and analytical method QC checks for each method specified in the Government furnished QAPP shall be followed. At a minimum, instrument calibration will be checked daily and recalibrated if a reading is found outside established control limits.

1.4.3.8 Compatibility Field Testing for Bulking Operations

Not used.

1.4.3.9 Demolition Samples

Not used.

1.4.3.10 Field Screening

Not Used.

1.5 QUALITY ASSURANCE ELEMENTS

The Contractor shall be responsible for the following QA elements necessary to monitor and ensure the quality of chemical data produced.

1.5.1 Laboratory Validation Requirements

The Contractor shall propose three laboratories to perform analyses for biomonitoring. The laboratories must have possess current USACE or Washington State certification to perform the tests specified in this section. All three proposed laboratories must be listed in the SAP amendment required in this section within 14 days of NTP. If a proposed laboratory cannot meet the specified analytical requirements or achieve the required validation or certification requirements, the Contractor shall request laboratory approval from the COR.

1.5.2 Quality Assurance Sample Collection and Analysis

Not used.

1.5.3 Performance Evaluation Samples

Not used.

1.5.4 Review of Contractor Laboratory Data

The Contractor shall be responsible for the independent data review of the entire data set provided by the Contractor's laboratory. The Government will validate analytical results from the Government laboratory.

To ensure that project data are sufficient to meet both qualitative and quantitative DQOs, laboratory data deliverables permitting a data quality assessment are required.

Information provided will be sufficient to review the data with respect to:

- Holding times and conditions
- Control response (biomonitoring)
- Initial and continuing calibration
- Surrogate recoveries
- Detection/quantitation limits
- Laboratory duplicates and MS/MSDs
- Precision and accuracy
- Representativeness
- Comparability
- Completeness
- Method SOP adherence
- Statistical interpretation (biomonitoring)

1.5.5 Validation of Data

Not used.

1.6 SUBMITTALS

Government approval is required for submittals with a "GA" designation; submittals having an "FIO" designation are for information only. The following shall be submitted in accordance with Section 01330 SUBMITTAL OF CONTRACT DATA:

Sampling and Analysis Plan; GA.

The Contractor shall accept the existing SAP including the Field Sampling Plan (FSP) and the Quality Assurance Project Plan (QAPP), after receipt of notice to proceed as part of the Management Plan described in Section 01401. The Contractor may make recommendations for altering the SAP after 90 days. Alterations in the SAP or any of the SOPs contained in the SAP shall only be made after technical review by the Government and with approval of the COR.

Weekly Field Chemistry Data Package; GA

A weekly field chemistry data package shall be provided to the COR every 7 days of the project. All field chemical data packages shall be submitted as paper hard-copies and in an Excel spreadsheet. The COR. shall approve the format of the electronic data submittal. The report shall include a summary of on-site analytical results obtained by the Contractor during the previous 7 days, and a data quality assessment report for all on-site data collected and analyzed during the previous 7 days. In addition the weekly chemistry data package shall include the following:

a. Summary of any deviations from the design chemical parameter measurement specifications.

b. Summary of chemical parameter measurements performed as contingent measurements.

c. Summary discussion of resulting data including achieving data reporting requirements.

d. Summary of achieving project specific DQO.

e. Presentation and evaluation of the data to include an overall assessment on the quality of the data for each method and matrix.

f. Internal QC data generated during the project, including tabular summaries correlating sample identifiers with all blank, duplicates, laboratory control samples, and batch identifiers.

g. A list of the affected sample results for each analyte, where sample results are negatively impacted by adverse quality control criteria.

h. Summary of field laboratory oversight activities, providing a discussion of the reliability of the data, QC problems encountered, and a summary of the evaluation of data quality for each analysis and matrix as indicated by the laboratory QC data and any other relevant findings.

Biological Compliance Monitoring; GA

The Contractor shall provide a Biological Compliance Monitoring Report to the COR 30 days after each quarterly biomonitoring sampling event. The report shall include at a minimum:

a. Summary of any deviations from the designed chemical and biological parameter measurement specifications.

b. Summary of chemical physical parameter measurements performed as directed by the biomonitoring test protocol.

c. Summary discussion of resulting data including achieving data reporting requirements.

d. Summary of achieving project specific DQO.

e. Presentation and evaluation of the data to include an overall assessment on the quality of the data for each test method.

f. Internal QC data generated during the project, including tabular summaries correlating sample identifiers with all blank, duplicates, laboratory control samples, control samples and batch identifiers.

g. A list of the affected sample results for each biomonitoring test, where sample results are negatively impacted by adverse quality control criteria.

h. Summary of field laboratory oversight activities, providing a discussion of the reliability of the data, QC problems encountered, and a summary of the evaluation of data quality for each analysis as indicated by the laboratory QC data and any other relevant findings.

Chemical Data Final Report; GA.

The CDFR shall be submitted, within 30 days of completing work at the site, before final payment. Each report shall be labeled with the contract number, project name and location.

1.7 QUALIFICATIONS

1.7.1 Chemical Quality Control Officer

As a minimum, the Contractor's Chemical Quality Control Officer shall have: a BS degree in Chemistry, Biology, Environmental Science or Environmental Engineering; 5 years of experience related to investigations, studies, design and remedial actions at HTRW sites; and 2 field seasons (or one continuous calendar year experience) in calibration and operation of various field monitoring devices as well as standard analytical chemistry methods common for analyzing soil, water, air and other materials for chemical contamination assessment, including hazardous waste manifesting. The Chemical Quality Control Officer shall ensure that all field chemistry and biomonitoring related objectives including responsibilities for DQO definitions, sampling and analysis, project requirements for data documentation and validation, and final project reports are attained. The Chemical Quality Control officer need not be present onsite during routine sampling, but shall be available for consultation with Government and Contractor personnel.

1.7.2 Project Chemist

As a minimum, the Contractor's Senior Chemist shall have: a BS degree in Chemistry, Biology, Environmental Science or Environmental Engineering; 5 years of experience related to investigations, studies, design and remedial actions at HTRW sites; 2 field seasons experience in calibrating and operating various field monitoring devices. The project chemist shall ensure that all chemistry related goals of the program are attained. The project chemist need not be onsite during all sampling events but shall be available for consultation with Government and Contractor personnel.

1.7.3 Environmental Sampler

As a minimum, the Contractor's Environmental Sampler shall have: an Associates degree in Chemistry, Environmental Science, Engineering, Geology, Hydrology, or a related field or 2 years of experience in the development and preparation of SAP and work plans; 2 years of experience in and knowledge of EPA methods for collecting environmental and hazardous waste samples; 2 years of experience in operation of field screening equipment (e.g. PID, FID, infrared spectrometer, immunoassay, etc.); and 2 field seasons of experience with the particular field screening techniques for use on this project. The Environmental Sampler shall collect all onsite samples and perform all field screening tests. The Environmental Sampler shall review the sampling results, and provide recommendations for the Contractor's sampling program. The Environmental Sampler shall be onsite during all sampling activities. .

1.8 COORDINATION MEETING

After the prework conference, before any sampling or testing, the Contractor and the Contracting Officer will meet at Seattle District office to discuss the CQC Plan and the SAP. The coordination meeting will be simultaneous to any CQC coordination meeting required in Section 01451B CONTRACTOR QUALITY CONTROL-SERVICES unless otherwise indicated or directed. A list of definable features that involve chemical measurements shall be agreed upon. At a minimum, each

matrix (soil, water, air, containerized wastes, instrumental chemical parameter measurement, etc.) shall be a definable work feature. Management of the chemical data quality system including project DQO, project submittals, chemical data documentation, chemical data assessment, required sampling and analysis protocols, and minimum data reporting requirements shall be agreed upon. The meeting will serve to establish an interrelationship between the Contractor's chemical data quality management and Government chemical quality assurance requirements and the EPA Region 10 Laboratory. Minutes of the meeting will be documented by the Government and shall be signed by both the Contractor and the Contracting Officer. The minutes will include any or all unresolved chemical issues along with the conditions for resolution and will become a part of the contract file.

PART 2 PRODUCTS (NOT APPLICABLE)

PART 3 EXECUTION

3.1 GENERAL REQUIREMENTS

The Contractor shall be responsible for chemical sample acquisition, sample analysis conducted by the non-government laboratory, instrumental measurements of chemical parameters and for chemical data quality control. An effective chemical data quality control system shall be established that meets the requirements for the chemical measurement DQO applicable to the project. The system shall cover chemical measurements pertaining to and required for Contractor and subcontractor produced chemical data. The Contractor shall control field screening, sampling, and testing in conjunction with remedial activities to meet all DQOs.

3.2 QUALITY CONTROL PLAN

3.2.1 General

In addition to the quality control requirements specified in Section 01451B CONTRACTOR QUALITY CONTROL-SERVICES, the CQC Plan shall incorporate the qualifications, authority and responsibilities of all chemical quality management and support personnel. Chemical measurements including sampling and/or chemical parameter measurement will not be permitted to begin until after production and acceptance of the CQC Plan, and acceptance of the Government furnished SAP.

3.2.2 Chemistry Elements of the CQC Plan

To cover contract related chemical measurements by the Contractor and all subcontractors, the CQC Plan shall include the following as a minimum.

3.2.2.1 Qualifications

Names, education, experience qualifications, authorities, and decision-making responsibilities of all chemical quality management and support personnel. The CQC Plan shall contain a copy of a letter from the project QC manager designating and authorizing a Chemical Quality Control Officer and chemical quality control organization staff.

3.2.2.2 Authority and Responsibility

A diagram, flow chart, or figure clearly depicting the chemical data quality management and support staff and the authority and responsibility of each for chemical sampling and analysis, procedures for

corrective actions, deliverables and submittals, deviations and changes, chemical quality documentation, data validation, minimum data reporting requirements, and DQO for chemical parameter measurement by the Contractor and subcontractors. The contents of this section of the CQC Plan shall be included in the applicable "Project Organization" elements of an amendment to the Government furnished FSP and QAPP.

3.3 SAMPLING AND ANALYSIS PLAN

The Government shall provide an existing SAP. The existing SAP delineates the methods the Contractor shall to use to accomplish the chemical quality control items to assure accurate, precise, representative, complete, legally defensible and comparable data. The SAP describes all chemical parameter measurements for all matrices for all phases of the remediation contract. As a single interrelated document, the SAP shall be provided to field and laboratory personnel. The Contractor may propose original/innovative approaches to chemical parameter measurements for cost reduction and remediation efficiency by abbreviated sampling, contingency sampling and/or contingency analysis, indicator or tracer analysis, onsite analytical services, equivalency or screening methods after 90 days from notice to proceed. An amendment to the SAP shall prepared by the Contractor within 14 days of NTP to clearly identify the Contractor obtained laboratories and key personnel as described in paragraph 3.2.2.2 of this Section. The Contractor shall furnish copies of the Government approved SAP to all laboratories and the Contractor's field sampling crew. Acceptance of the Government furnished SAP shall confirm the Contractor's understanding of the contract requirements for chemical data quality control, and shall describe procedures for field sampling and sample submittal for analysis, field chemical parameter measurement, data documentation, data assessment and data reporting requirements.

3.4 CHEMISTRY DATA PACKAGE

The chemistry data package shall be produced and provided through USACE COR to the USACE operations team. The chemistry data package shall contain information to demonstrate that the project's DQO have been fulfilled. The QA function will assess the Contractor's compliance with the SAP, and will recommend corrective action as necessary.

3.5 CONTROL OF CHEMICAL DATA QUALITY

Contractor chemical data quality control shall ensure that a quality control program is in place that assures sampling and analytical activities and the resulting chemical parameter measurement data comply with the DQO and the requirements of the SAP. The Contractor shall utilize the three-phase control system that includes a preparatory, initial and follow-up phase for each definable feature of work. The Contractor's three-phase chemical data control process shall ensure that data reporting requirements are achieved and shall be implemented according to Section 01451B CONTRACTOR QUALITY CONTROL-SERVICES.

3.6 ANALYTICAL TESTING LABORATORIES

The Contractor shall propose the analytical laboratories to be used for the biomonitoring and chemical sample analyses not performed by the government laboratory. Laboratory validation requirements shall be in accordance with paragraph LABORATORY VALIDATION REQUIREMENTS. The Contractor may utilize its own laboratory or utilize subcontract laboratories to achieve the biomonitoring or chemical sample analyses.

3.6.1 Laboratory Analytical Requirements

The Contractor shall provide the specified chemical analyses by the Contractor's laboratory. The Contractor shall provide chemical analyses to achieve the project DQO for all parameters specified by the methods. To give the USACE programs the greatest flexibility in the execution of its projects, the EPA SW-846 methods are generally the methods employed for the analytical testing of environmental samples. These methods are flexible and shall be adapted to individual project-specific requirements and the requirements of EM 200-1-3 Appendix I Shell for Analytical Chemistry Requirements (2001).

3.6.2 Laboratory Performance

The Contractor shall provide continued acceptable analytical performance and shall establish a procedure to address data deficiencies noted by review and/or quality assurance sample results. The Contractor shall provide and implement a mechanism for providing biomonitoring labs with the SAP or QAPP portion of the SAP, for monitoring the lab's performance and for performing corrective action procedures. The Contractor shall acquire services with additional USACE validated laboratories in the event a project lab loses its validation status during the project.

3.7 CHEMICAL DATA FINAL REPORT

The CDFR shall be produced including a summary of quality control practices employed and all chemical parameter measurement activities after project completion. As a minimum, the CDFR shall contain the following:

a. Summary of project scope and description.

b. Summary of any deviations from the design biomonitoring parameter measurement specifications.

c. Summary of biomonitoring and/or chemical parameter measurements performed as contingent measurements.

d. Summary discussion of resulting data including achieving data reporting requirements.

e. Summary of achieving project specific DQO.

f. Presentation and evaluation of the data to include an overall assessment on the quality of the data for each method and matrix.

g. Internal QC data generated during the project, including tabular summaries correlating sample identifiers with all blank, matrix spikes, surrogates, duplicates, laboratory control samples, and batch identifiers.

h. A list of the affected sample results for each analyte (indexed by method and matrix) including the appropriate data qualifier where sample results are negatively impacted by adverse quality control criteria.

i. Summary of field and laboratory oversight activities, providing a discussion of the reliability of the data, QC problems encountered, and a summary of the evaluation of data

quality for each analysis and matrix as indicated by the laboratory QC data and any other relevant findings.

j. Conclusions and recommendations.

3.8 DOCUMENTATION

Documentation records shall be provided as factual evidence that required chemical data has been produced and chemical data quality has been achieved. The documentation shall comply with the requirements specified in paragraphs SAMPLING AND ANALYSIS PLAN, CHEMISTRY DATA PACKAGE, and CHEMICAL DATA FINAL REPORT. Documentation requirements shall be in accordance with Section 01240 COST AND PERFORMANCE REPORT.

3.9 NOTIFICATION OF NON-COMPLIANCE

The Contracting Officer will notify the Contractor of any detected noncompliance with the foregoing requirements. The Contractor shall take immediate corrective action after receipt of such notice.

Section 01450

List of Tables

Title	Description
Table 1	Performance Monitoring Sample Location Description
Table 2	Performance Monitoring Sampling Schedule
Table 3	Number and Type of Performance Monitoring Samples
Table 4	Sample Handling Requirements for Performance Monitoring
Table 5	Chemical Compliance Monitoring Automated Composite Sample Volumes
Table 6	Chemical Compliance Monitoring Sampling Schedule
Table 7	Chemical Compliance Monitoring Sampling Schedule
Table 8	Biological Compliance Monitoring Analytical Requirements
Table 9	Biological Compliance Monitoring Sample Handling Requirements

Table 1 **Performance Monitoring Sample Location Description**		
Location	**Location Number**	**Sample Location Description**
Roughing Tank Influent	SP-0	Downstream of valve manifold; ½ inch PVC pipe with brass ball valve
Aeration Tank Influent	SP-4	West of Tank 402; ½ inch galvanized pipe with ball valve
Aeration Tank	SP-5	Top center of aeration tank; grab
Clarifier Effluent	SP-6	West end of clarification tank; ¾ inch galvanized pipe with ball valve
Multimedia Filter Effluent	SP-8	North end of multi-media filters; ½ inch galvanized pipe with ball valve
Lead Carbon Filter Effluent	SP-9	West of carbon No. 1 tank; ½ inch galvanized pipe with ball valve
Lag Carbon Filter Effluent	SP10	West of carbon No. 2 tank; ½ inch galvanized pipe with ball valve

Table 2
Performance Monitoring Sampling Schedule

Location	Sample Location	Parameter	Analysis Performed at On-Site laboratory	Analysis Performed at Off-site Laboratory
Roughing Tank Influent	SP-0	O&G		X
		PAH		X
		PCP		X
Aeration Tank Influent	SP-4	Flow Rate	X	
		PAH		X
		PCP		X
		TCOD	X	
		TSS	X	
		VSS	X	
Aeration Tank	SP-5	ML TSS	X	
		ML VSS	X	
		RAS TSS	X	
		Temperature	X	
		D.O.	X	
		pH	X	
Clarifier Effluent	SP-6	TSS	X	
		VSS	X	
		SCOD	X	
		PAH		X
		PCP		X
		NH_3	X	
		Orthophosphate. dissolved	X	
Multi-Media Filter Effluent	SP-8	TSS	X	
		PCP		X
		PAH		X
Lead Carbon Filter Effluent	SP-9	PAH		X
		PCP		X
Lag Carbon Effluent	SP-10	PAH		X
		PCP		X

Notes:

1. All performance samples are grab samples.

Key to parameters:

PAH = polycyclic aromatic hydrocarbons
PCP = pentachlorophenol
TCOD = total chemical oxygen demand
SCOD = soluble chemical oxygen demand
TSS = total suspended solids
D.O. = dissolved oxygen
RAS = return activated sludge
VSS = volatile activated sludge
NH_3 = ammonia as nitrogen
O&G = oil and grease
pH = hydrogen ion
ML = mixed liquor

Table 3
Number and Type of Performance Monitoring Samples

Parameter	Onsite or Offsite Laboratory	Total Number of Samples per Week
Ammonia as Nitrogen (NH_3)	Onsite	1
Chemical Oxygen Demand (total)	Onsite	1
Chemical Oxygen Demand (soluble)	Onsite	1
Oil and Grease	Offsite	1 min. to 5 max.
Orthophosphate, dissolved	Onsite	1
PCP	Offsite	6 min. to 10 max.
PAHs	Offsite	6 min. to 10 max.
Total Suspended Solids	Onsite	5
Volatile Suspended Solids	Onsite	4

a. Not including field duplicates, field blanks, MS/MSD samples
b. Operators have, at their discretion, up to four additional samples for O&G, PAH or PCP

Table 4
Sample Handling Requirements for Performance Monitoring

Analysis	Method	Container	Sample Preservation	Holding Time
Ammonia as Nitrogen	EPA 350.1	500 ml glass jar w/ baked poly cap	Cool to 4 ºC; H_2SO_4 to pH<2	As soon as possible, 28 days maximum
Chemical Oxygen Demand (total)	EPA 410.1	500 ml glass jar w/ baked poly cap	Cool to 4 ºC; H_2SO_4 to pH<2	As soon as possible, 28 days maximum
Chemical Oxygen Demand (soluble)	EPA 410.1	500 ml glass jar w/ baked poly cap	Cool to 4 ºC	As soon as possible, 28 days maximum
Oil & Grease	EPA 413.1	1 liter glass w/ baked poly cap	Cool to 4 ºC; H_2SO_4 to pH<2	As soon as possible, 28 days maximum
Orthophosphate, dissolved	EPA 365.3	500 ml glass jar w/ baked poly cap	Cool to 4 ºC	As soon as possible, 48 hours maximum
PCP	EPA 8310	1 liter amber glass w/Teflon lined cap	Cool to 4 ºC	7 days to extraction, 40 days after extraction
PAH	EPA 8040A	1 liter amber glass w/Teflon lined cap	Cool to 4 ºC	7 days to extraction, 40 days after extraction
Total Suspended Solids	EPA 160.2	500 ml glass jar w/ baked poly cap	Cool to 4 ºC	As soon as possible, 7 days maximum
Volatile Suspended Solids	STD Method 209D	500 ml glass jar w/ baked poly cap	Cool to 4 ºC	As soon as possible, 7 days maximum

Table 5 Chemical Compliance Monitoring Automated Composite Sample Volumes		
Sample Type	**Containers**	**Volume (gallons)**
Original Sample (PAH, PCP, TSS)	Three 1-liter glass jars	0.78
Field Duplicate	Same as above	0.78
MS/MSD	Same as above x 3 (No MS/MSD for TSS)	1.56
Total		**3.12**

Table 6 Chemical Compliance Monitoring Sampling Schedule				
Location	**Sampling Location**	**Parameter**	**Analysis Performed at Onsite Laboratory**	**Analysis Performed at Offsite Laboratory**
Effluent Storage Tank	SP-11	PAH[a]		X
		PCP[a]		X
		Flow Rate	X	
		TSS		X
		TDS		X
		Temperature	X	
		PH	X	
		Dissolved Oxygen	X	

[a] 24-hour composite

Table 7 Sample Handling Requirements for Chemical Compliance Monitoring				
Analyte	**Method**	**Container**	**Sample Preservation**	**Holding Time**
PAHs	EPA 8310	1 liter amber glass w/ Teflon lined cap	Cool to 4 ºC	7 days to extraction, 40 days after extraction
PCP	EPA 8040A	1 liter amber glass w/ Teflon lined cap	Cool to 4 ºC	7 days to extraction, 40 days after extraction
Total Dissolved Solids	EAP 160.1	1 liter poly bottle w/baked poly cap	Cool to 4 ºC	As soon as possible, 7 days maximum
Total Suspended Solids	EPA160.2	1 liter poly bottle w/baked poly cap	Cool to 4 ºC	As soon as possible, 7 days maximum

Table 8
Biological Compliance Monitoring
Biomonitoring Analytical Requirements

Organism	Test Protocol	QA Protocol
Acute Toxicity		
Menidia beryyllina (Inland Silversides)	The test protocol is adapted from C.I. Weber, et al., *Methods for Measuring the Acute Toxicity of Effluents to Freshwater and Marine Organisms*, EPA/600/4-90/027, 1991.	All QA criteria used are in accordance with *Methods for Measuring the Acute Toxicity of Effluents to Freshwater and Marine Organisms*, EPA/600/4-90/027. Test results that are not valid (i.e. control mortality exceeds acceptable levels) will not be accepted and must be repeated.
Chronic Toxicity		
Mytilus Sp. (blue mussel)or *Crassostrea gigas* (Pacific oyster)	*Standard Guide for Conducting Static Acute Toxicity Tests Starting with Embryos of Saltwater Bivalve Molluscs*, ASTM E 724-89.	*Methods for Measuring the Acute Toxicity of Effluents to Freshwater and Marine Organisms*, EPA/4-85-013, Quality Assurance for Biological Testing, EPA/600/4-78-043, and *Standard Guide for Conducting Static Acute Toxicity Tests Starting with Embryos of Saltwater Bivalve Molluscs*, ASTM E 724-89. Test results that are not valid (i.e. control mortality exceeds acceptable levels) will not be accepted and must be repeated.

Table 9
Biological Compliance Monitoring
Biomonitoring Sample Handling Requirements

Organism	Sample Type	Container	Preservation	Holding Time
Estuarine Fish (*Menidia beryyllina*)	Composite	2-2.5 gallon HDPE cubitainers w/ poly lined caps	Cool to 4 ºC	As soon as possible, 36 hours maximum
Mussel/oyster (*Mytilus* Sp. or *Crassostrea gigas*)	Composite	1-2.5 gallon HDPE cubitainers w/ poly lined caps	Cool to 4 ºC	As soon as possible, 36 hours maximum

Attachment A

General Site Data And Existing NPDES Permit Requirements

This page intentionally blank.

Site Data Summary

Parameter			Value	Reference
CLIMATE	PRECIPITATION	Annual	50.7 inches	U. S. Army Corps of Engineers, 1999a
	AIR TEMPERATURE	Range Average	4 – 18 ^{o} C 10.7 ^{o} C	U. S. Army Corps of Engineers, 1999a
	SEAWATER TEMPERATURE	Range Average	8 – 14 ^{o} C 11.0 ^{o} C	U. S. Army Corps of Engineers, 1999a
	GROUNDWATER TEMPERATURE	Range Average	9 – 14 ^{o} C 11.7 ^{o} C	U. S. Army Corps of Engineers, 1999a
	TIDES	MHHW MSL MLLW	1.34 ft 6.62 ft 0.00 ft	U. S. ARMY CORPS OF ENGINEERS, 1999A
HYDROLOGY	UPPER AQUIFER	DEPTH TO WATER	7.5 – 10 ft bgs	CH2M HILL, 1997a; this report
		Recharge from uplands	14 gpm	CH2M HILL, 1999C
		Recharge from lower aquifer	22 gpm	CH2M HILL, 1999c
		Recharge from precipitation	4.8 gpm	CH2M HILL, 1999c
		Current pumping rate	80 gpm	CH2M HILL, 1999c
		Hydraulic conductivity	54 ft/day	CH2M HILL, 1999c
		VERTICAL ANISOTROPY	20:1	CH2M HILL, 1999c
		Estimated porosity	0.28	CH2M HILL, 1999a
	AQUITARD	Hydraulic conductivity (average vertical)	1.5 X 10^{-5} ft/day	CH2M HILL, 1999C
		Estimated porosity	0.46	CH2M HILL, 1999a
Contamination	Upper aquifer:	Soil (napthalene)	1400 – 700000 ug/kg	CH2M HILL, 1997a; this report
		Groundwater (napthalene)	3.2-124400 ug/l	CH2M HILL, 1997a; this report
	LOWER AQUIFER	Groundwater (napthalene)	0.25 – 837 ug/l	CH2M HILL, 1997a; this report
NAPL	Average Viscosity:	DNAPL LNAPL	14.4 cp 6.6 cp	CH2M HILL, 1997a; this report
	Average Density:	DNAPL LNAPL	1.034 gm/ml 0.994 gm/ml	CH2M HILL, 1997a; this report
	Interfacial Tension:	DNAPL LNAPL	12.0 dynes/cm 9.6 dynes/cm	CH2M HILL, 1997a; this report

This page intentionally blank.

Effluent Discharge Monitoring Frequency and Sensitivity Requirements

CHEMICAL MONITORING		MONITORING REQUIREMENTS					
	Discharge Limitation		MEASUREMENT FREQUENCY				
Effluent Characteristic	**Daily Maximum (µg/L)**	**Required Sensitivity (µg/L)**	**Current Sampling Program[1]**	**Pilot: Weeks 1 and 2**	**Pilot: Weeks 2-12**	**Sample Type**	**Reported Value(s)**
Total of 16 Polycyclic Aromatic Hydrocarbons (PAHs)	20	10	Once per week	Daily	Bi-weekly	24-hour composite	Maximum daily
Individual PAHs:							
Naphthalene	4	2	Once per week	Daily	Bi-weekly	24-hour composite	Maximum daily
Acenaphthylene	4	2	Once per week	Daily	Bi-weekly	24-hour composite	Maximum daily
Acenaphthene	4	2	Once per week	Daily	Bi-weekly	24-hour composite	Maximum daily
Fluorene	2	1	Once per week	Daily	Bi-weekly	24-hour composite	Maximum daily
Phenanthrene	2	1	Once per week	Daily	Bi-weekly	24-hour composite	Maximum daily
Anthracene	2	1	Once per week	Daily	Bi-weekly	24-hour composite	Maximum daily
Fluoranthene	2	1	Once per week	Daily	Bi-weekly	24-hour composite	Maximum daily
Pyrene	2	1	Once per week	Daily	Bi-weekly	24-hour composite	Maximum daily
Benzo(a)anthracene	2	1	Once per week	Daily	Bi-weekly	24-hour composite	Maximum daily
Chrysene	2	1	Once per week	Daily	Bi-weekly	24-hour composite	Maximum daily
Benzo(b)fluoranthene	2	1	Once per week	Daily	Bi-weekly	24-hour composite	Maximum daily
Benzo(k)fluoranthene	2	1	Once per week	Daily	Bi-weekly	24-hour composite	Maximum daily
Benzo(a)pyrene	2	1	Once per week	Daily	Bi-weekly	24-hour composite	Maximum daily
Dibenzo(a,h) anthracene	2	1	Once per week	Daily	Bi-weekly	24-hour composite	Maximum daily
Benzo(g,h,i)perylene	2	1	Once per week	Daily	Bi-weekly	24-hour composite	Maximum daily
Indeno(1,2,3-cd)pyrene	2	1	Once per week	Daily	Bi-weekly	24-hour composite	Maximum daily
Pentachlorophenol	6	3	Once per week	Daily	Bi-weekly	24-hour composite	Maximum daily
Discharge Flow (gpm)	NA	NA	Continuous	Daily	Bi-weekly	Recording	Maximum daily
Total Suspended Solids [TSS] (mg/L)	NA	NA	Once per week	Daily	Bi-weekly	24-hour composite	Maximum daily
Total Dissolved Solids [TDS] (mg/L)	NA	NA	Once per week	Daily	Bi-weekly	Grab	Maximum daily

Effluent Discharge Monitoring Frequency and Sensitivity Requirements (Con.)

CHEMICAL MONITORING		MONITORING REQUIREMENTS					
	Discharge Limitation		MEASUREMENT FREQUENCY				
Effluent Characteristic	**Daily Maximum (µg/L)**	**Required Sensitivity (µg/L)**	**Current Sampling Program[1]**	**Pilot: Weeks 1 and 2**	**Pilot: Weeks 2-12**	**Sample Type**	**Reported Value(s)**
Temperature [degrees C]	See WAC 173-201A	NA	Once per week	Daily	Bi-weekly	Grab	Maximum daily
Dissolved Oxygen [DO] (mg/L)	See WAC 173-201A	NA	Once per week	Daily	Bi-weekly	Grab	Maximum daily
pH	6.0-9.0	NA	Once per week	Daily	Bi-weekly	Grab	Maximum daily

BIOMONITORING*		MONITORING REQUIREMENTS		
ORGANISM	**Type of Toxicity Test**	**Measurement Frequency**	**Sample Type**	**Reported Value(s)**
Inland Silversides (*Menidia beryllina*)	Acute survival test	Quarterly	24-hour composite	LC50
Purple sea urchin or sand dollar	Chronic test	Quarterly	24-hour composite	IC25
Pacific oyster or mussel larvae	Chronic test	Quarterly	24-hour composite	NOEC, LOEC, EC50/LC50

* Biomonitoring will occur at week 12 of the pilot study and will occur no less than quarterly for the remainder of the pilot study.
1: Current sampling frequency will resume after week 12.

SECTION 01451B

CONTRACTOR QUALITY CONTROL - SERVICES

PART 1 GENERAL

1.1 SECTION SCOPE

This section applies to all work for operation, maintenance and minor repairs activities to all systems and plant.

1.2 GENERAL

A Contractor's Quality Control (CQC) system for services related activities shall be established and maintained to ensure compliance with these specifications. The CQC system shall include but not be limited to plans, procedures, and organization necessary to ensure the services which are provided complies with the contract requirements.

1.3 SUBMITTALS

Submittals required by this section shall be for Government approval (GA) or for information only (FIO), and shall be submitted as stated below in accordance with Section 01330, SUBMITTAL OF CONTRACT DATA.

Data

Interim Quality Control Plan; (GA)

Submit the interim plan, no later than 10 calendar days after contract award. The interim plan must be acceptable to the Government prior to start of on-site activities.

Quality Control Plan; (GA)

Submit no later than 30 calendar days after start of on-site work activities.

Proposed changes in CQC plan; (GA)

Submit a minimum of 10 calendar days prior to implementing the change.

Proposed change in CQC staff; (GA)

Submit a minimum of 10 calendar days prior to the change or in emergency situations when the need arises.

CQC records form; (GA)

Submit with CQC plan.

Records

Weekly CQC Records; FIO

Current records of CQC operations, activities, and tests, by first working day of the following week.

1.4 QUALITY CONTROL PLAN

1.4.1 General

The CQC plan which is proposed to implement the requirements of paragraph 1.2, shall be submitted for review in accordance with paragraph "Submittals." The plan shall identify personnel, procedures, instructions, tests, records, and forms to be used. On-site work will be permitted to begin only after acceptance of the CQC Plan or acceptance of an interim plan applicable to the particular feature of work to be started. Work outside of the features of work included in an accepted interim plan will not be permitted to begin until acceptance of a CQC Plan or another interim plan containing the additional features of work to be started.

1.4.2 The Contractor's Quality Control (CQC) Plan

The CQC plan shall include as a minimum the following to cover all work on-site; including work by subcontractors, fabricators, suppliers and purchasing agents:

(1) The names and minimum acceptable qualifications of firms or individuals tasked to perform inspections and the extent of their authority. Their functional role shall be depicted in an organization chart. No lead person or first line supervisor shall be considered a Quality Control inspector.

(2) A quality control inspection program covering all general and specific tasks included in the contract scope of work. It shall specify tasks or areas to be inspected on either a scheduled or unscheduled basis and the manner in which inspections are to be conducted.

(3) Method of identifying and tracking deficiencies in the quality of services to be performed, before the level of performance becomes unacceptable as defined by the contract documents.

(4) Method of documenting and enforcing quality control operations of both prime and any subcontractor work, including inspection and testing.

(5) Security and key control as required.

(6) Special safety equipment clothing required.

(7) Detailed specifics as to how the Contractor will ensure that all personnel take required safety precautions when working with chemicals, electricity, vehicles, power tools, welding equipment, etc., and when entering or working in confined spaces.

(8) Control, verification and acceptance testing procedures for each specific test to include the test name, specification paragraph requiring test, feature of work to be tested, test frequency, and qualified testing laboratories to be used and person responsible for each test. (Coordinate with Section 01450 CHEMICAL DATA QUALITY CONTROL.)

(9) Reporting procedures, including proposed reporting formats. (see sample forms at end of Section.)

1.4.3 Acceptance of Plan

Acceptance of the CQC plan is required prior to the start of work. Acceptance is conditional and will be predicated on satisfactory performance during the contract. The Government reserves the right to require the Contractor to make changes in the CQC plan and operations including removal of personnel, as necessary, to obtain the conformance with contract requirements.

1.4.4 Notification of Changes

After acceptance of the CQC plan, any proposed changes shall be submitted prior to implementing of any proposed change.

1.5 COORDINATION MEETING

A pre-performance conference and CQC system meeting shall be convened and held within 30 calendar days of the contract award date. The meeting will be held at the Wyckoff/Eagle Harbor Superfund Site at a time mutually agreed to by both parties and arranged by the Government. The Government and the Contractor shall meet to discuss administrative and technical details, and to discuss and develop a mutual understanding of the CQC system in detail, and the interrelationship of Contractor's management and control with the Government's quality assurance. Minutes of the meeting shall be prepared by the Contractor and shall be signed by both the Contractor and the Government, shall become a part of the contract file. There may also be occasions when subsequent conferences will be called by either party to reconfirm mutual understandings and/or address deficiencies in the CQC system or procedures which may require corrective action by the Contractor.

1.6 QUALITY CONTROL ORGANIZATION

The following shall apply to the work being performed whether in the Contractor's or a subcontractor's offices including, when applicable, design/engineering offices and fabrication/manufacturing facility or at the project. The word "site" shall apply to all three locations, as applicable.

1.6.1 CQC System Manager(s)

An individual shall be identified within the Contractor's organization who shall be responsible for the overall management of CQC known as the CQC system manager and shall have the authority to act in all CQC

matters for the Contractor. This CQC system manager shall be employed by the Contractor and shall be, at a minimum, available to discuss facility operations by telephone during normal Government working hours at the project site and to meet at the site with the GQAR within 24 hours of such notice. An alternate for the CQC System Manager shall be identified in the plan to serve in the event of the system manager's absence. The requirements for the alternate will be the same as for the designated CQC manager.

1.6.1.1 CQC System Manager

The CQC system manager shall have a minimum of 3 years experience working on similar type treatment facilities. The CQC system manager shall be assigned as system manager but may perform other duties in addition to quality control.

1.6.2 Organizational Changes

The Government's acceptance shall be obtained before replacing any member of the CQC staff. Requests shall include the names, qualifications, duties, and responsibilities of each proposed replacement.

1.6.3 Submittals

The CQC organization shall be responsible for certifying that all contract submittals are in compliance with the contract requirements.

1.7 CONTROL

CQC is the means by which the Contractor ensures that the work, to include that of subcontractors and suppliers, complies with the requirements of the contract. The controls shall be adequate to cover all operations, and shall be keyed to the proposed work sequence.

1.7.1 General Requirements

(1) A review of the existing facility operating and maintenance data and procedures.

(2) Check safety to include compliance with and upgrading of the safety plan and activity hazard analysis.

(3) Establish level of workmanship and verify that it meets minimum acceptable workmanship standards.

(4) Visually inspecting items not requiring laboratory testing.

(5) Preparing and maintaining inspection checklists.

(6) Coordinating site activity.

(7) Maintaining copies of test results, inspection reports certification papers and permits.

(8) A check to assure that required control inspection and testing are provided.

(9) A physical examination of required materials and equipment, to assure that they are on hand, and are stored as specified.

(10) Resolution of all differences.

1.7.2 Employee Standards

(1) Review the activity hazard analysis with each worker.

(2) The applicable workers shall be informed as to the acceptable level of workmanship required in order to meet contract specifications prior to the start of actual work.

(3) Ensure for new employees, all applicable requirements are discussed prior to on-site performance.

1.7.3 Follow-up. Daily checks shall be performed on the ongoing work to assure continuing compliance with contract requirements, including control testing. The checks shall be made a matter of record in the CQC documentation. Final follow-up checks shall be conducted and all minor deficiencies corrected or scheduled for correction within appropriate need dates, major deficiencies including items not covered by routine maintenance shall be identified and an evaluation and proposal of repair activities submitted to GQAR to prevent continuation of detrimental operations.

1.8 TESTS

1.8.1 Testing Procedure

Tests that are specified or required shall be performed to verify that control measures are adequate to provide a product which conforms to contract requirements. Testing includes operation and/or acceptance tests when specified. A list of tests to be performed shall be furnished as a part of the CQC plan. The list shall give the test name, specification paragraph containing the test requirements, and the personnel responsible for each type of test. The following activities shall be performed and recorded and the following data provided:

(1) Verify that testing procedures comply with contract requirements.

(2) Verify that facilities and testing equipment are available and comply with testing standards.

(3) Check test instrument calibration data against certified standards.

(4) Verify that recording forms and test identification control number system, including all of the test documentation requirements, have been prepared.

(5) Results of all tests taken, both passing and failing tests, will be recorded on an approved report for the date taken. Coordinate chemical testing with requirements of Section CHEMICAL DATA QUALITY CONTROL. Failure to submit timely test reports, as stated, may result in nonpayment for related work performed and disapproval of the test facility for this contract.

1.9 QC MEETINGS

After the start of contract performance, the QC Manager shall conduct monthly QC meetings at the work site with the project personnel. The QC Manager shall prepare the minutes of the meeting and provide a copy to the Contracting Officer within 2 working days after the meeting. The Contracting Officer may attend these meetings. The QC Manager shall notify the Contracting Officer at least 48 hours in advance of each meeting. As a minimum, the following shall be accomplished at each meeting:

a. Review the minutes of the previous meeting;

b. Review the schedule and the status of work:

(1) Preventative maintenance work accomplished since last meeting

(2) Corrective maintenance or other maintenance and repair work accomplished since last meeting

(3) Rework items identified since last meeting

(4) Rework items completed since last meeting;

(5) Operating conditions at the plant, including any changed conditions.

c. Review the status of submittals:

(1) Submittals reviewed and approved since last meeting

(2) Submittals required in the near future;

d. Review the work to be accomplished in the next 4 weeks and documentation required:

(1) Establish completion dates for task orders or rework items

(2) Update the schedule, including testing and any other inspection required by this contract.

(3) Discuss work methods and the approach that will be used to provide quality work performance by planning ahead and identifying potential problems for each definable feature of work.

1.10 QC CERTIFICATION

1.10.1 Contractor Quality Control Report Certification

Each Contractor Quality Control Report shall contain the following statement: "On behalf of the Contractor, I certify that this report is complete and correct and equipment and material used and work performed during this reporting period is in compliance with the contract requirements to the best of my knowledge, except as noted in this report."

1.11 DOCUMENTATION

Current records of CQC operations, activities, and tests performed shall be maintained including the work of subcontractors and suppliers. These records shall be on an approved form and shall include factual evidence that required quality control activities and/or tests have been performed.

1.11.1 Contractor Weekly Quality Control Report

The Contractor shall submit weekly Quality Control Reports to the COR by 10 am on the first working day of the following week. The report form shall be submitted to the COR for review and approval as part of the Contractor's Quality Control Plan. (See sample form attached.) The reporting of work shall be identified by terminology consistent with the work schedule. Contractor Weekly Quality Control Reports are to be prepared, signed and dated by the QC Manager and shall contain the following information:

a. Identify inspections conducted during the week.

Check that materials are stored properly, preliminary work was done correctly, the testing plan has been reviewed, and work methods and schedule have been discussed, and that safety and hazard analysis was addressed. Identify any safety hazards encountered, instructions given and corrective actions taken.

b. A list of job safety actions taken and safety inspections conducted. Indicate that safety requirements have been met including the results on the following:

(1) Was a job safety meeting held? (If YES, attach a copy of the meeting minutes.)

(2) Were there any lost time accidents? (If YES, attach a copy of the completed OSHA report.)

(3) Was crane/trenching/scaffold/high voltage electrical/high work done? (If YES, attach a statement or checklist showing inspection performed.)

(4) Was hazardous material/waste released into the environment? (If YES, attach a description of meetings held and accidents that happened.)

(5) List safety actions taken and safety inspections conducted.

c. List the rework items identified, but not corrected.

d. List the rework items corrected from the rework items list along with the corrective action taken.

e. Identify submittals which have been checked for compliance with the technical specifications and submitted as required.

f. Include a "remarks" section in this report which will contain pertinent information including directions received, quality control problem areas, deviations from the QC plan, deficiencies or delays encountered, QC meetings held, corrective direction given by the QC Organization and corrective action taken by the Contractor. Also note conflicts or errors in the existing O & M data and procedures.

g. The report from the CQC system manager shall include copies of test reports and copies of reports prepared by all subordinate quality control personnel.

1.11.2 Contractor Quality Control Daily Discrepancy Report

Submit a Contractor Quality Control Daily Discrepancy Report (see sample attached) with the weekly Summary for any given inspection as required to explain special problems, deficiencies, non-work items, unusual operations, etc.

1.11.3 Rework Items List

The QC Manager shall maintain a list of work that does not comply with the Contract requirements, identifying what items need to be reworked, the date the item was originally discovered, the date the item will be corrected by, and the date the item was corrected. There is no requirement to report a rework item that is corrected the same day it is discovered. Attach a copy of the "Rework Items List" to the Contractor Weekly Quality Control Report. The Contractor shall be responsible for including on this list items needing rework including those identified by the Contracting Officer.

1.11.4 Operation and Maintenance Data

The QC Manager is required to ensure the existing operation and maintenance data and procedures are kept current on a continuing basis and marked to show deviations which have been found. Ensure each deviation has been identified with the appropriate modifying documentation. The QC Manager shall initial each deviation and each revision. Upon completion of the Contract, the QC Manager shall furnish a certificate attesting to the accuracy of the existing Operation and Maintenance Data and procedures prior to final payment to the Contractor.

1.12 NOTIFICATION OF NONCOMPLIANCE

The Government will notify the Contractor of any detected noncompliance with the foregoing requirements. After receipt of such notice, immediate corrective action shall be taken. Such notice, when delivered to the Contractor at the site of the work, shall be deemed sufficient for the purpose of notification. If the Contractor fails or refuses to comply promptly, the Government may take appropriate action in accordance with the requirements of Section E, INSPECTION AND ACCEPTANCE.

1.13 INSPECTION REQUIREMENTS

The CQC manager or CQC staff (also known as Contractor Quality Control Representative, CQCR) shall conduct the inspection of all aspects of the various items required for the operations and maintenance activities and mentioned in the Preventative Maintenance Plan for compliance and conduct all required inspections and tests, etc. and perform design reviews on all engineering and design work required in the performance of this contract. Inspections and tests shall be recorded in the daily CQC report required in paragraph 1.11 DOCUMENTATION.

1.14 PAYMENT

Separate payment will not be made for work required under this section, all costs associated therewith shall be included in the applicable unit prices or lump sum prices contained in the Price Schedule.

PART 2 - NOT USED

PART 3 - NOT USED

Attachments follow. (2)

END OF SECTION

Sample Form

.

WEEKLY QUALITY CONTROL INSPECTION LOG			
DATE	LOCATION	ITEMS INSPECTED	RESULTS*

If satisfactory, write "Sat", if deficient, include the Contractor Quality Control Daily Discrepancy Report with the Weekly Summary.

On behalf of the Contractor, I certify that this report is complete and correct and equipment and material used and work performed during this reporting period is in compliance with the contract requirements to the best of my knowledge, except as noted in this report.

Sample Form

CONTRACTOR QUALITY CONTROL DAILY DISCREPANCY REPORT

Date: _____

Report No. _____

1. Description and location of work:

_____

_____

_____

_____

_____

_____

_____

2. Type of deficiency:

_____

_____

_____

_____

_____

_____

_____

_____

3. Corrective action required and schedule for corrections:

_____

_____

_____

_____

_____

_____

_____

_____

Signature of contractor's QC Representative (Date)

This page intentionally blank.

SECTION 01501

TEMPORARY FACILITIES AND CONTROLS

PART 1 GENERAL

1.1 CONTRACTOR AND GOVERNMENT OFFICE SPACE

1.1.1 Temporary Facilities

1.1.1.1 Existing Contractor Facilities (Rental Transfer)

The Contractor shall use and maintain the existing office trailer supplied as a rental under EPA's contract with CH2M HILL and their subcontractor OMI, Inc. The trailer is leased from GE Capital Modular Space in Kent, Washington in the amount of $821.24 per month. The trailer is 14 feet by 66 feet and has a laboratory set-up built in the front area. It also has one office, a restroom with sink and hot water heater, and an open office area. EPA's contractor shall be required to transfer the rental responsibility to this contract, as of January 1, 2002, and this Contractor shall pay all the associated fees under the applicable fixed price CLINs for the entire O&M period of the contract. The Contractor shall pay all the monthly fees until one month after the final optional month of operations is completed. The trailer shall remain in its designated space in the support zone. The Contractor shall pay to demobilize the trailer from the site at the completion of this contract.

1.1.1.2 Existing Decontamination Trailer (Rental Transfer)

The Contractor shall use and maintain the existing decontamination trailer supplied as a rental under the Site Infrastructure contract (DACW67-01-C-0017) for use by all on-site personnel. The Contractor shall be required to transfer the rental responsibility to this contract, as of January 1, 2002, and pay all associated fees under the applicable fixed price CLINs for the rental during the O&M period of the contract. For bidding purposes the rental fee shall be assumed to be $660.00/month. In the event the rental fees change (increase/decrease) for this trailer and/or the office trailer the contract amount will be adjusted in accordance with the CHANGES clause of the CONTRACT CLAUSES. All other maintenance fees shall be considered a subsidiary responsibility of the Contractor unless expressly specified as Government furnished. The decontamination trailer should be located in Space F as shown on plate C1 where it shall remain during this contract. The existing decontamination trailer will have a minimum of four emergency showers and two hand washing sinks. The existing decontamination trailer will also be equipped with a minimum of 30 full-length lockers and at least two open shelving units. This trailer shall remain in place at the end of the O&M period and shall be transferred to the next Government contractor.

1.1.1.3 Government Field Office

The Government has provided its own office trailer to remain located in its designated space in the support zone.

1.1.1.4 Storage Trailer (By others)

This trailer shall be removed by others by December 31, 2001.

1.1.2 Spaces for Temporary Facilities

The trailer slots can accommodate standard size trailers, 10 feet x 60 feet. Electrical, water, and sewer hook-ups exist at each trailer spot as described below. Telephone hook-ups are also available in the support zone. The Contractor is responsible for providing its own telephone service in its office trailer, and disconnecting utilities (electricity, water, sewer, and telephone) from the office trailer when the contract work is complete. Plastic safety fencing around the support zone shall be removed and reinstalled by the Contractor when delivering and/or removing trailers. The Contractor shall maintain and re-furbish any damaged plastic fencing in the support zone.

1.2 AVAILABILITY OF UTILITY SERVICES

1.2.1 Water

1.2.1.1 Potable Water for Operations and Housekeeping

The Contractor shall acquire water for use in the operations of the water treatment plant, utilization of the on-site decontamination pad and western tire wash, and the support zone trailers from the City of Bainbridge Island for the operating periods of this contract. For bidding purposes, the monthly fee usually ranges from $130 to $200 per month. Contractor shall reasonably conserve potable water, as the on-site storage tank takes a day to refill. Potable water availability for other uses at the work area of the site is limited except for fire control. If any additional potable water is required, the Contractor must obtain water from the City of Bainbridge Island or other source at its own expense.

1.2.1.2 Non-Potable Water for Dust Control and Decontamination

The Contractor shall not use potable water from the site's existing service connections for dust control or decontamination except as described above. The Contractor can obtain water for dust control; equipment, vehicle, debris decontamination; or other related work from the Weaver Well site at the southern end of Weaver Road. The Contractor shall arrange and pay a fee to the City of Bainbridge Island (City) Water Department, at no additional cost to the Government, for the use of water from the Weaver Well site. The Government will provide directions to the well. The Contractor shall provide the City a 24 hour notice prior to pick up of the water. The Contractor shall transport the water to the Wyckoff Site.

1.2.2 Electricity

1.2.2.1 O&M Services

Upon assumption of existing treatment plant O&M responsibilities, the Contractor shall transfer the services and pay for all electrical power directly to the utility provider to operate the existing treatment plant facilities. Cost of all such service shall be included under the respective CLIN for O&M services. The following historical data is provided for information on electrical power usage and costs for the

existing treatment facility: This includes the electrical usage by all the trailers in the support zone as there is only one on-site meter presently installed.

Date of Service	KWH Use	Total Cost
Approx Feb 1999	41040 (1,368/day)	N.A.*
3 Feb 2000 – 6 Mar 2000	41760 (1,305/day)	$2,435
4 Jun 2001 - 3 Jul 2001	27900	$1,333

*N.A. not available

1.2.2.2 Adjustment of Electrical Service Charges

For bidding purposes the Contractor shall assume the utility rate schedule at time of bidding shall be in effect during the entire contract period. In the event any monthly utility fee, rate charges, seasonal adjustments or special fees increase more than 15 percent from the rate for that period of service in effect during the previous year the Contractor shall be entitled to reimbursement for all such excess costs. The Contractor shall be responsible to pay the first 15 percent of any such rate variations for each change in the utility rate schedule. The allowable amount of reimbursement will be determined in accordance with the CHANGES clause of the CONTRACT CLAUSES.

1.2.3 Sewer

Each trailer slot has a sewage hook-up available which discharges to an on-site drain field west of the trailer court.

1.2.4 Telephone

There are presently two (2) existing telephone line connections available for the Contractor. A connection point to these lines is available within the support zone, and in some cases, conduit has been run to the trailer slot. The Contractor is responsible for making necessary arrangements with the local telephone company and paying all hook-up and usage fees, and routing conduit as needed.

1.3 DECONTAMINATION

The Contractor shall decontaminate personnel, equipment, and debris as necessary to prevent off site migration of contaminants. Personnel and lightly soiled vehicles (vehicles having only driven around the Former Process Area) may use the existing decontamination pad and the Contractor provided personnel decontamination facilities. Debris requiring decontamination and heavy equipment shall be decontaminated in place to remove gross contamination, provided, the surface water runoff is controlled and working conditions are not significantly degraded. The decontamination water shall be either allowed to percolate through the ground or discharged to the LTP (see paragraph 1.3.1 for pretreatment requirements). Debris, as appropriate, and heavy equipment shall go through a final washdown procedure prior to exiting the site to prevent the transportation of contaminates off-site. The Contractor shall designate a central decontamination area other than the existing pad by the LTP. Debris and heavy equipment shall not be decontaminated on the existing vehicle decontamination area located near the LTP. Water from the central pad shall be controlled to prevent off-site run-off and either allowed to percolate to the ground or pumped to the LTP (see paragraph 1.3.1). Decontamination of personnel and equipment shall take place prior to leaving the Former Processing Area through the West Gate. A tire wash is provided by the Government at the West Gate, but the contractor shall be responsible for operation costs. Refer to Section 01351, SAFETY, HEALTH, AND EMERGENCY RESPONSE (HTRW/UST).

1.3.1 Pretreatment Requirements For Discharge Of Decontamination Water To The Liquid Treatment Plant (LTP).

Decontamination water may be discharged to the LTP at a rate no greater than 10 gpm. Decontamination water discharged to the LTP shall not contain either visible NAPL or greater than 5 percent suspended solids. The decontamination water shall be discharged to the decontamination pad at the main entrance to allow settling of sediments in the grit chamber in place. The contractor shall be responsible for periodically emptying the grit chamber on-site in an area to be approved by the COR.

All L-NAPL and D-NAPL can be collected and discharged to the existing on site product storage tank. The tank has a capacity of 10,150 gallons; therefore, the appropriate frequency of pumping shall be used to accommodate the limited capacity of the product storage tank before a disposal event is required. Use of this tank needs to be coordinated with the COR.

1.4 DUST CONTROL

The Contractor shall assure generation of dust on the site by vehicles and equipment is minimized. Currently a dust action level of 1 mg/m^3 has been set for Worker Protection and the Contractor shall maintain the dust action levels at or below that level. When other contractors are working on site, this requirement shall be accomplished by the contractor whose work is creating the most dust. If it is not readily apparent which contractor is creating the most dust, then this contractor shall assume the responsibility for dust control. Dust control consists of watering the roads and nearby dry areas that are visibly exhibiting a dust problem. On site traffic shall be restricted to a speed that does not create any visible dust. The site is presently posted at 5 miles per hour.

1.5 SANITARY PROVISIONS

Restrooms for use of the contractor are available in the office trailer and the decontamination trailer. If any additional portable restrooms are required by the number of personnel working on site, they shall be set up in the support zone or parking area where they will not obstruct other on-site activities. See Section 01351, SAFETY, HEALTH, AND EMERGENCY RESPONSE (HTRW/UST) for required provisions.

1.6 TEMPORARY ELECTRIC WIRING

1.6.1 Temporary Power and Lighting

The Contractor shall provide temporary power facilities in accordance with the safety requirements of the National Electric Code NFPA No. 70 and the SAFETY AND HEALTH REQUIREMENTS MANUAL EM 385-1-1, if necessary. The Contractor, or its delegated subcontractor, shall enforce the safety requirements of electrical extensions for the work of subcontractors. Lights used to illuminate work areas shall have shields directing the light downward to reduce glare outside the facility. Work shall be accomplished by skilled electrical tradesmen.

1.6.2 Electrical Equipment

In addition to the requirements of SAFETY AND HEALTH REQUIREMENTS MANUAL, EM 385-1-1, temporary wiring conductors installed for operation of tools and equipment shall be either Type TW or THW contained in metal raceways, or shall be hard usage or extra hard usage multiconductor cord. Temporary wiring shall be secured above the ground or floor in a workmanlike manner and shall not present an obstacle to persons, equipment, or vehicles. Open wiring may only be used in accordance with the provisions of the National Electric Code.

1.6.3 Submittals

Submit detailed drawings of temporary power connections. Drawings shall include, but not be limited to, main disconnect, grounding, service drops, service entrance conductors, feeders, GFCI'S, and all site trailer connections.

1.7 FIRE PROTECTION

During the project period, the Contractor shall provide fire extinguishers on-site in accordance with the safety requirements of the SAFETY AND HEALTH REQUIREMENTS MANUAL, EM 385-1-1. The Contractor shall remove the fire extinguishers at the completion of contract period.

1.8 STAGING AREA

Contractor will be provided an open staging area. The asphalt staging pad near the center of the site is available as a staging area. The Contractor may request to clear the asphalt pad of items stored there to another area within the fenced portion of the site as directed by the COR if they obstruct use of the pad. Other than the fenced site, the staging area is unsecured, and Contractor shall make provisions for its own security. If the area is not maintained in a safe and clean condition as defined below, the Contracting

Officer may have the area cleaned by others with the costs being deducted from the Contractor's payment.

1.9 HOUSEKEEPING AND CLEANUP

Pursuant to the requirements of Clause CLEANING UP and Clause ACCIDENT PREVENTION, of the CONTRACT CLAUSES, the Contractor shall assign sufficient personnel to insure compliance. The Contractor shall submit a detailed written plan for implementation of this requirement. The plan will be presented as part of the SSHP and will provide for keeping the total project site, structures, and accesses free of debris and obstructions at all times. In addition, the Quality Control person shall take immediate action to insure compliance with this requirement. Housekeeping and cleanup shall be assigned by the Contractor to specific personnel. The name(s) of the personnel shall be available at the project site.

1.10 ELEVATED WORK AREAS

Workers in elevated work areas in excess of 6 feet above an adjoining surface require special safety attention. In addition to the provisions of SAFETY AND HEALTH REQUIREMENTS MANUAL, EM 385-1-1, the following safety measures are required to be submitted to the Contracting Officer's Representative. Prior to commencement of work in elevated work areas, the Contractor shall submit drawings depicting all provisions of his positive fall protection system. Walking on beams and/or girders and the climbing of columns is prohibited without positive protection. If safety belts and harnesses are used, the positive fall protection plan will address fall restraint versus fall arrest. Body belts will ONLY be used for fall restraint, they will not be used for fall arrest.

1.11 TRAFFIC CONTROL

Placement and maintenance of traffic control devices shall be in accordance with the U.S. Department of Transportation, Federal Highway Administration publication, Manual on Uniform Traffic Control Devices.

1.12 HARD HAT SIGNS

Hard hat signs are already installed at the site. The Contractor shall provide additional 24 x 24 inch square hard hat area signs, as necessary, at each entry to the project or work area if the existing signs become damaged, stolen, or are not located properly for the work being performed. The Contractor shall insure a minimum of 2 signs are posted at all times. Signs shall be in accordance with the sketch at the end of this section.

1.13 SECURITY FENCE

The security fence (chain link with concertina wire at the top) shall be maintained during the life of this contract. The contractor shall be responsible to close any opening made in the exterior security fence when removed to facilitate other work on site. The final replacement fence layout shall be submitted to the COR for approval prior to starting work. The fence shall match the existing fence. Presently, all the permanent fencing required is in place.

PART 2 PRODUCTS AND PART 3 EXECUTION (NOT APPLICABLE)

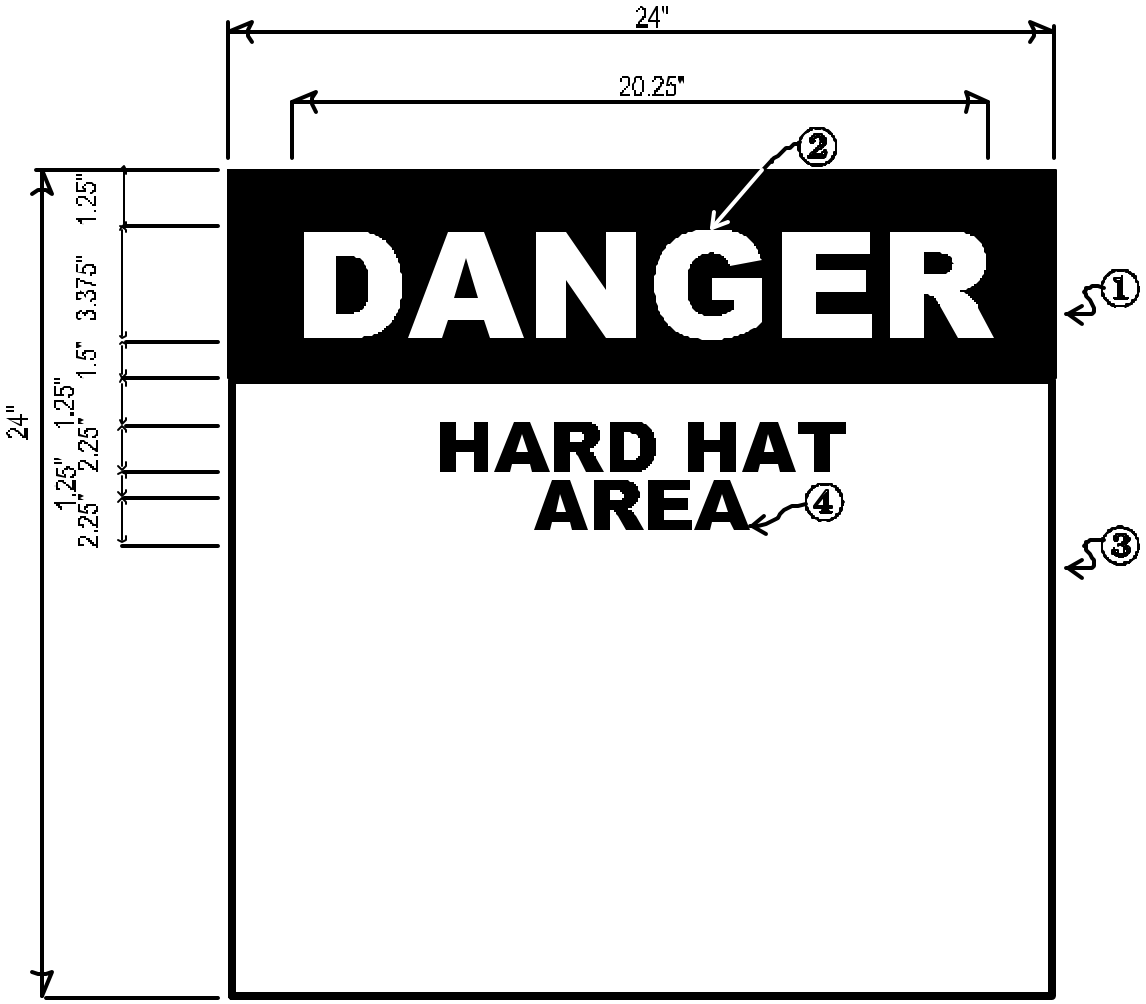

?? SIGN SHALL BE FABRICATED FROM .125 THICK 6061-T6 ALUMINUM PANEL

?? <u>COLOR</u>

1. SAFETY RED (SR)
2. WHITE
3. WHITE
4. BLACK

?? LETTERING SHALL BE HELVETICA BOLD TYPOGRAPHY.

?? LETTERS AND BACKGROUND SHALL BE REFLECTIVE SHEETING MATERIAL.

?? SIGNS SHALL BE POSTED AT 6’-6” (BOTTOM SIGN TO GRADE) OR AS DIRECTED BY THE CONTRACTING OFFICER.

LETTERING TO BE CENTERED ON PANEL.

SECTION 01610

MATERIALS AND SUPPLIES

PART 1 - GENERAL

1.1 SUMMARY

This section presents the minimum requirements for the Contractor Furnished items, materials and equipment installed or consumed, to perform the requirements of this contract.

1.2 DEFINITIONS

1.2.1 Contractor Furnished Materials

Materials are the physical equipment, materials, and parts that are required to complete any of the maintenance and repair activities. The Contractor shall provide all materials and equipment required for the Thermal Remediation Pilot Study, except as specified under Section 01150; GOVERNMENT FURNISHED PROPERTY, SERVICES, AND UTILITIES.

1.2.2 Contractor Furnished Supplies

Supplies are those consumable items that are required for continued operation of the pilot study. Supplies include, but are not limited to, chemicals required for water treatment; chemicals required for laboratory analyses; items used for custodial services such as cleaners, paper products; items used for preventative maintenance such as grease, oil, personal protective equipment, etc. Except for items which are listed as a separate payment item, the Contractor shall provide, under the firm fixed-price portion of the contract, all other supplies required at the treatment plant except as specified under Section 01150; GOVERNMENT FURNISHED PROPERTY, SERVICES, AND UTILITIES.

1.3 GOVERNMENT ACCEPTANCE

The Contracting Officer retains the right to approve the kind and quality of items costing more than $1,000.00.

1.4 SUBMITTALS

In addition to any other requirements in the contract, the Contracting Officer may request submittals for new equipment to be installed in the work. Such submittals may be for Government approval or for information only as designated by the Contracting Officer. If so required the following shall be submitted in accordance with Section 01330 SUBMITTAL OF CONTRACT DATA:

Product Data

Replacement or Upgraded Equipment

A complete list of equipment and materials, including manufacturer's descriptive data and technical literature, performance charts and curves, catalog cuts, and installation instructions including spare parts data for each different item of material and equipment.

Schedule of Replacement Parts

A complete list of parts and supplies, with current unit prices and source of supply.

Shop Drawings

Installed Systems

Drawings containing complete wiring and schematic diagrams, control diagrams, and any other details required to demonstrate that the system has been coordinated and will properly function as a unit. Drawings shall show proposed layout and anchorage of equipment and appurtenances, and equipment relationship to other parts of the work including clearances for maintenance and operation.

Instructions

O&M Data

Proposed operating and maintenance diagrams, instructions, and other sheets.

Reports

Field Testing

Performance test reports in booklet form showing all field tests performed.

PART 2 - PRODUCTS

2.1 GENERAL

The Contractor shall furnish all necessary supplies, parts, and materials required to perform all functions required by the various specification sections. Requirements for use of Government furnished materials and availability are specified under Section 01150, GOVERNMENT FURNISHED PROPERTY, SERVICES, AND UTILITIES. Equipment supplied by the Contractor shall be energy efficient.

2.1.1 Quality Standards

All replacement units, parts, components, and materials to be used in the maintenance, repair, and alteration of facilities and equipment shall be compatible with that existing equipment on which it is to be used; shall be of equal or better quality as original equipment specifications; shall conform to the applicable specifications and used in accordance with original design and manufacturer intent.

2.1.2 Equipment

The Contractor shall provide all equipment and materials necessary to operate the pilot study. This shall include, but not be limited to: boilers, heat exchangers, feedwater conditioning/pre-treatment units, new meters and control equipment and sensors, pipes, valves, pumps, vapor-phase granular activated carbon treatment units. All equipment on the site at the time of contract execution, and equipment installed during the contract period, shall be the property of the Government, except as noted in SECTION B PRICE SCHEDULE and elsewhere in this contract. Specific equipment substitutions or replacements that affect pilot study operations shall meet or exceed the quality assurance requirements of Section 01450, CHEMICAL DATA QUALITY CONTROL, and shall be pre-approved by the Contracting Officer prior to use.

2.1.3 Materials

The Contractor shall locate, purchase, transport, store and dispose of materials and supplies as necessary to complete the work. Chemical or sampling related supplies shall be in accordance with Section 01450, CHEMICAL DATA QUALITY CONTROL.

2.1.4 Miscellaneous Items

The Contractor shall provide any special tools and materials necessary to maintain site equipment and systems in proper operating condition. This shall include spreading protective materials over equipment to prevent any damage during maintenance activities, as necessary.

2.2 GENERAL MATERIAL AND EQUIPMENT REPLACEMENT REQUIREMENTS

2.2.1 Code Acceptance

All equipment furnished and installed under this contract shall be suitable for the intended application and shall conform to the applicable standards of one or more of the following:

American National Standards Institute (ANSI)
American Society for Testing and Materials (ASTM)
Institute of Electrical and Electronics Engineers (IEEE)
National Electrical Manufacturer's Association (NEMA)
National Fire Protection Association (NFPA)
Underwriters Laboratories Inc. (UL)

Where no such standard exists for any product under this contract, the Contractor shall demonstrate the

suitability of the product for the application intended to the satisfaction of the Government. Installation shall be in accordance with the National Electrical Code, 1999.

2.2.2 Standard Products

Materials and equipment required to be installed for replacement of existing items shall be the standard products of a manufacturer regularly engaged in the manufacture of such products.

2.2.2.1 Items without technical specifications shall be of acceptable industrial grade and quality. If the original manufacturer has updated the quality of parts for current production, parts supplied under this contract shall equal or exceed the updated quality.

2.2.3 Nameplates

Each major item of equipment shall have the manufacturer’s name, address, type or style, model or serial number, and catalog number on a plate secured to the item of equipment.

2.2.4 Special Tools

One set of special tools, calibration devices, and instruments required for operation, calibration, and maintenance of the equipment shall be provided.

2.2.5 Protection from Moving Parts

All belts, chains, couplings, and other moving parts shall be completely enclosed by guards to prevent accidental personal injury. Guards shall be removable or so arranged as to allow access to the equipment for maintenance. If equipment is housed in a lockable enclosure, this shall be sufficient protection and no additional guards are necessary.

PART 3 - EXECUTION

3.1 OPERATION AND MAINTENANCE

Provide all materials and equipment to meet the requirements of this section and the other pertinent sections of the specifications.

3.2 DISPOSITION OF REMOVED PARTS

The Contractor shall retain the parts replaced for at least 30 days after completion of the job and make these parts readily available for inspection by the Government representative upon request. When disputes arise concerning material, equipment, and components selected for work items already accomplished, the Contractor shall, at no cost to the Government, remove, replace, and/or rework material, equipment, and components so that compliance with the Government's requirements are satisfied. The resolution of formal disputes is addressed in the "Disputes" clause. See Section H2.5 MAINTENANCE AND REPAIR COST LIMITATION.

3.3 O&M INSTRUCTIONS

Parts catalogs and operating instructions needed or useful in operation, maintenance, repairs, dismantling, or assembling, and for repair and identification of parts for ordering replacements, shall be especially prepared for all new equipment installed under this contract. The assembled material shall include complete identification of the spare parts furnished in compliance with the requirements of these specifications.

3.4 REQUIRED SUPPLIES AT COMPLETION OF CONTRACT

At the completion of the contract, or final extension thereof, the Contractor shall ensure a quantity of consumable supplies (including but not limited to: caustic and acid chemicals used to break emulsions, LPG to fire emergency generators at the existing treatment plant, personal protective equipment, granular activated carbon, and multimedia filter media) required to operate the plant for a minimum of 10 calendar days is at the plant. In addition, all inventory existing at start of contract shall be restored in accordance with Section 01150, GOVERNMENT FURNISHED PROPERTY, SERVICES, AND UTILITIES.

END OF SECTION

This page intentionally blank.

SECTION 01710

EXISTING CONDITIONS

PART 1 GENERAL

1.1 SUMMARY

Data provide in this section is for the information of the Contractor and the Government makes no representation that the data is necessarily complete or all inclusive or to its accuracy. The Contractor shall verify or investigate to its satisfaction, prior to proceeding with the work, any data subject to variance and interpretation.

1.2 SUBSURFACE DATA

Data on the subsurface soil characteristics at the Wyckoff/Eagle Harbor Superfund Site is available upon request and having the need to review the data (drilling logs, etc.) after award of this contract.

1.3 PROJECT LOCATION

The Wyckoff / Eagle Harbor Superfund site is located on the east side of Bainbridge Island in Central Puget Sound, Washington. The Wyckoff property is situated on the southeast side of Eagle Harbor. From the early 1900's through 1988, a succession of companies treated wood at the Wyckoff property for use as railroad ties and trestles, telephone poles, pilings, docks and piers. Over this period of operation, the soil and groundwater at Wyckoff became severely contaminated. Currently, an estimated 1 million gallons of creosote product remains in the soil and groundwater. Most of this contamination is located in the Former Process Area of the Wyckoff facility and is the source of continued releases of contamination into the environment.

1.4 SITE LAYOUT AND EXISTING STRUCTURES

Site layout and the location of structures existing within or adjacent to the project site are provided in the Contract Drawings (See Section J LIST OF ATTACHMENTS).

1.5 TOPOGRAPHY AND SURFACE WATER DRAINAGE

The overall Wyckoff property occupies approximately 57 acres, about 18 acres of which encompass the Soil Operable Unit, with 8 acres encompassing the Former Process Area. The property includes a spit with approximately 0.8 miles of shoreline that has been extended and filled at least twice during past re-constructions of the property. The average ground surface elevation is 10 feet above NGVD (+16 feet MLLW). A tree-covered bluff defines the southern boundary of the Wyckoff Soil OU and extends toward the island's interior to an elevation exceeding 200 feet. The Wyckoff Soil OU includes near-surface and sub-surface vadose zone soil, consisting of fill and native materials, extending to the maximum elevation of the water table, which is approximately 5 to 7 feet below ground surface (bgs). There are no known streams that cross the uplands. A drainage feature runs through a culvert across the property.

The Former Process Area is bounded on the western side by Eagle Harbor and on the eastern side by Puget Sound.

1.6 GEOLOGIC SETTING

The site geology can be characterized as the vadose zone, the unconfined upper aquifer, the low-permeability confining layer, or aquitard, the semi-confined lower aquifer and the deep aquifers. The vadose (unsaturated) zone immediately below the surface of the Wyckoff Soil OU is 5 to 10 feet thick and consists of fill and native materials composed of discontinuous silt and fine sand layers. The unconfined upper aquifer underlying the vadose zone is composed of fill and native materials 5 to 10 feet in thickness, overlying marine sand containing small amounts of interbedded gravel, silt and clay. This marine sand layer extends down another 5 to 70 feet bgs. The depth to water has been strongly influenced by the tides in the past, however tidal influence has diminished since installation of the sheet pile wall. The maximum elevation of the water level within this aquifer defines the upper boundary of the Groundwater OU.

Separating the upper aquifer from the lower semi-confined aquifer is a relatively impermeable layer of dense marine silt and glacial till, also called the aquitard. The top of this aquitard extends from near ground surface in the south-central part of the site to approximately 75 feet bgs along the northern portion of the site. Based on numerous field explorations during the RI and the Corps of Engineers' exploratory drilling events in 1997, 1999 and 2000, it appears that the aquitard is continuous throughout the site. Its thickness ranges from 10 to 40 feet, with the thinnest area (10 feet) localized near the northeast corner of the site.

Underlying the aquitard is a semi-confined lower aquifer, which consists primarily of sand, with small amounts of silt, clay and gravel. The lower boundary of this aquifer has not been completely determined; however, it is believed that this aquifer ends at approximately 200 feet bgs. Also, limited data from deeper well logs at the property indicate that there are at least two additional clay layers that may act as confining units between this semi-confined aquifer and even deeper aquifers.

The deep aquifers are located from approximately 200 to 1,500 bgs. These aquifers are potable and were used in the past by the Wyckoff Company to provide water for on-site operations with excess sent to nearby residents to be used for drinking water purposes. Due to environmental concerns that these water production wells may introduce contaminants to the deeper aquifer systems, EPA sealed and abandoned them in 1995 as part of the Interim Groundwater action.

1.7 SUMMARY OF SITE CONTAMINATION

Refer to Section 01351 SAFETY, HEALTH AND EMERGENCY RESPONSE (HTRW/UST), and Attachment J6, RECORD OF DECISION.

PART 2 PRODUCTS (NOT USED)

PART 3 EXECUTION (NOT USED)

END OF SECTION

SECTION 01782

CLOSEOUT RECORDS

PART 1 GENERAL

1.1 SUBMITTALS

Government approval is required for submittals with a "GA" designation; submittals having an "FIO" designation are for information only. Due dates shall be as indicated in applicable paragraphs and all submittals shall be completed before final payment will be made. The following shall be submitted in accordance with Section 01330 SUBMITTAL OF CONTRACT DATA:

SD-01 Data

Record of Equipment and Materials; GA

Two copies of the record listing the materials and equipment incorporated into the plant during the O&M period. Submit a preliminary list for review 21 days prior to contract closeout to be returned with Government comments. Submit the final record copies of equipment and materials no later than 30 calendar days after end of on-site performance period.

SD-18 Records

Warranty Tags; GA

Two record copies of the warranty tags for each item of equipment covered under a warranty matching the layout and design required under Section 01785 WARRANTIES.

Utilities; FIO

Two record copies of the utility consumption and fees for all utilities consumed during the contract period.

PART 2 PRODUCTS (NOT APPLICABLE)

PART 3 EXECUTION

3.1 RECORD OF EQUIPMENT AND MATERIALS

The Contractor shall maintain a preliminary record of equipment and materials used on the project. The record shall list the following data:

RECORD OF EQUIPMENT AND MATERIALS DATA

Description	Specification Section	Manufacturer and Catalog, Model, and Serial Number	Composition and Size	Where Used
Carbon for GAC	01830		As required	Treatment Plant
Hazardous Waste Disposal	02120		As required	Treatment Plant
All Equipment Replacing Existing Equipment (1)	01610	As required	As required	Treatment Plant
Any new equipment or systems (1)	01610 and Task Order	As required or specified	As required	Treatment Plant
Delivered Fuel			Diesel, Propane or other Bulk Fuels	Treatment Plant

(1) The list shall include all information usually listed on manufacturer's name plate. The "EQUIPMENT-IN-PLACE LIST" shall include, as applicable, the following for each piece of equipment installed: description of item, location (identify exact relationship to existing equipment), model number, serial number, capacity, name and address of manufacturer, name and address of equipment supplier, condition, spare parts list, manufacturer's catalog, and warranty.

3.2 UTILITIES RECORDS

The Contractor shall furnish records of utilities services showing consumption and all fees and charges for all utilities (electrical, gas, water etc.) used on the project during the contract period.

3.3 PAYMENT

No separate payment will be made for Contract Closeout Data and all costs in connection therewith shall be included as an incidental cost in the contract unit prices under the O&M performance period for the Schedule Items to which the work pertains.

END OF SECTION

SECTION 01785

WARRANTIES

PART 1 GENERAL

1.1 SCOPE

All work performed by the Contractor during the period of the contract shall be subject to the provisions of this section.

1.2 SUBMITTALS

Submittals shall be made in accordance with Section 01330: SUBMITTAL OF CONTRACT DATA.

1.3 WARRANTY OF SYSTEMS AND EQUIPMENT UNDER PERFORMANCE SPECIFICATIONS OR DESIGN CRITERIA (DEC 1989) (FAR 52.246-19)

1.3.1 Definitions

"Acceptance," as used in this clause, means the act of an authorized representative of the Government by which the Government assumes for itself, or as an agent of another, ownership of existing and identified supplies, or approves specific services rendered, as partial or complete performance of the contract.

"Correction," as used in this clause, means the elimination of a defect.

"Defect," as used in this clause, means any condition or characteristic in any supplies or services furnished by the Contractor under the contract that is not in compliance with the requirements of the contract.

"Supplies," as used in this clause, means the end items furnished by the Contractor and related services required under this contract. Except when this contract includes the clause entitled Warranty of Data, supplies also means "data."

1.3.2 Contractor’s Obligations

(1) The Contractor's warranties under this clause shall apply only to those defects discovered by either the Government or the Contractor in accordance with the following schedule of work:

(a) for Corrective Maintenance under the indefinite quantity work activities for a period of 90 calendar days after actual completion of those activities.

(b) for reconditioned equipment, installed subject to approval of the Contracting Officer, or previously installed in Treatment Plant, and reinstalled in any portion of the facility, for a period of 90 calendar days from the date of acceptance of the equipment or system in the facility.

(c) for new equipment provided under this contract and installed in any portion of the facility for a period of 1 year from the date of acceptance of the equipment or system in the facility.

(2) If the Contractor becomes aware at any time before acceptance by the Government (whether before or after tender to the Government) that a defect exists in any supplies or services, the Contractor shall (i) promptly correct the defect, or (ii) promptly notify the Contracting Officer, in writing, of the defect, using the same procedures prescribed in paragraph 1.3.2 (3) of this clause.

(3) If the Contracting Officer determines that a defect exists in any of the supplies or services accepted by the Government under this contract, the Contracting Officer shall promptly notify the Contractor of the defect, in writing, within 10 working days after discovery of the defect. Upon timely notification of the existence of a defect, or if the Contractor independently discovers a defect in accepted supplies or services, the Contractor shall submit to the Contracting Officer, in writing, within 10 calendar days (unless otherwise directed due to special factors) a recommendation for corrective actions, together with supporting information in sufficient detail for the Contracting Officer to determine what corrective action, if any, shall be undertaken.

(4) The Contractor shall promptly comply with any timely written direction from the Contracting Officer to correct or partially correct a defect, at no increase in the contract price.

(5) The Contractor shall also prepare and furnish to the Contracting Officer data and reports applicable to any correction required under this clause (including revision and updating of all other affected data called for under this contract) at no increase in the contract price.

(6) In the event of timely notice of a decision not to correct or only to partially correct, the Contractor shall submit a technical and cost proposal within 10 calendar days of such notice to amend the contract to permit acceptance of the affected supplies or services in accordance with the revised requirement, and an equitable reduction in the contract price shall promptly be negotiated by the parties and be reflected in a supplemental agreement to this contract.

(7) Any supplies or parts thereof corrected or furnished in replacement and any services reperformed shall also be subject to the conditions of this clause to the same extent as supplies or services initially accepted. The warranty, with respect to these supplies, parts, or services, shall be equal in duration to that set forth in paragraph 1.3.2 (1) of this clause, and shall run from the date of installation of the corrected or replaced supplies.

(8) The Contractor shall not be responsible under this clause for the correction of defects in Government-furnished property, except for defects in installation, unless the Contractor performs, or is obligated to perform, any modifications or other work on such property. In that event, the Contractor shall be responsible for correction of defects that result from the modifications or other work.

(9) If the Government returns supplies to the Contractor for correction or replacement under this clause, the Contractor shall be liable for transportation charges up to an amount equal to the cost of transportation by the usual commercial method of shipment from the place of delivery specified in this contract (irrespective of the F.O.B. point or the point of acceptance) to the Contractor's plant and return to the place of delivery specified in this contract. The Contractor shall also bear the responsibility for the supplies while in transit.

(10) All implied warranties of merchantability and "fitness for a particular purpose" are excluded from any obligation under this contract.

1.3.3 Remedies available to the Government.

(1) The rights and remedies of the Government provided in this clause-

(i) Shall not be affected in any way by any terms or conditions of this contract concerning the conclusiveness of inspection and acceptance; and

(ii) Are in addition to, and do not limit, any rights afforded to the Government by any other clause of this contract.

(2) Within 15 working days after receipt of the Contractor's recommendations for corrective action and adequate supporting information, the Contracting Officer, using sole discretion, shall give the Contractor written notice not to correct any defect, or to correct or partially correct any defect within a reasonable time, except as required to correct a defect which may or is the cause of an emergency condition, such corrective action may be performed at the project site or at an off-site location depending on the nature and impact of the required action.

(3) In no event shall the Government be responsible for any extension or delays in the scheduled deliveries or periods of performance under this contract as a result of the Contractor's obligations to correct defects, nor shall there be any adjustment of the delivery schedule or period of performance as a result of the correction of defects unless provided by a supplemental agreement with adequate consideration.

(4) This clause shall not be construed as obligating the Government to increase the contract price.

(5) The Contracting Officer shall give the Contractor a written notice specifying any failure or refusal of the Contractor to

(i) Present a detailed recommendation for corrective action as required by paragraph 1.3.2 (3) of this clause;

(ii) Correct defects as directed under paragraph 1.3.2 (4) of this clause; or

(iii) Prepare and furnish data and reports as required by paragraph 1.3.2 (5) of this clause.

PART 2 PRODUCTS (NOT APPLICABLE)

PART 3 EXECUTION

3.1 ADDITIONAL WARRANTY REQUIREMENTS

3.1.1 Equipment Warranty Identification Tags

The Contractor shall provide warranty identification tags on all Contractor and Government furnished equipment which is Contractor installed.

The tags and information shall be suitable for interior and exterior locations, resistant to solvents, abrasion, and to fading caused by sunlight, precipitation, etc. These tags shall have a permanent pressure-sensitive adhesive back, and shall be installed in a position that is easily noticeable. If the equipment surface is not suitable for adhesive back tags, the Contractor shall submit an alternative to the Government for review and approval. Contractor furnished equipment that has differing warranties on its components will have each component tagged/identified.) Lettering on the tags shall be block-type upper case and easily readable. Tags shall be similar in format to the following:

EQUIPMENT WARRANTY CONTRACTOR FURNISHED EQUIPMENT
MFG _____ MODEL NO. _____ SERIAL NO. _____ CONTRACT NO. _____ CONTRACTOR NAME _____ CONTRACTOR ADDRESS _____ CONTRACTOR PHONE NO. _____ DATE WARRANTY EXPIRES _____
IN CASE OF WARRANTY ACTION FIRST CONTACT (Point of contact, including name and telephone number.)

EQUIPMENT WARRANTY GOVERNMENT FURNISHED EQUIPMENT
MFG _____ MODEL NO. _____ SERIAL NO. _____ CONTRACT NO. _____ DATE EQUIPMENT PLACED IN SERVICE _____

In the case of equipment repaired or replaced by the Contractor during the warranty period, the Equipment Warranty tag shall be replaced or updated, as applicable, to indicate the scope of the repair/replacement and the new warranty expiration date in accordance with the paragraph WARRANTY OF SYSTEMS AND EQUIPMENT UNDER PERFORMANCE SPECIFICATIONS OR DESIGN CRITERIA.

END OF SECTION

This page intentionally blank.

SECTION 01830

TREATMENT PLANT OPERATION AND MAINTENANCE

PART 1 GENERAL

1.1 SCOPE

This Section describes the Contractor's operational (O&M) responsibilities for the existing Treatment Plant facilities. The operation of the Treatment Plant and all associated support and ancillary equipment shall be an integral part of the overall Contractor responsibilities for the duration of the contract.

1.2 REFERENCES

40 CFR 260.

1.3 PERFORMANCE REQUIREMENTS

1.3.1 General Services

The Contractor shall operate the groundwater extraction, and water treatment systems according to the following general requirements, the Management Plan (see Section 01401 MANAGEMENT PLAN AND FIELD REPORTS), the manufacturer’s operation manuals, and the existing O&M data. Systems shall be maintained to minimize unsatisfactory service conditions including flooding conditions, pump station failures, pipe blockages, and excessive inflow conditions. Facilities shall be maintained clean and orderly with generated waste materials (such as waste oils, and other waste solids) routinely collected, as necessary, and removed to an appropriate disposal site. The location of the disposal site shall be subject to CO approval. All transportation and disposal practices shall be in accordance with all applicable environmental regulations.

1.3.2 Areas of Responsibility

The Contractor shall be responsible for the satisfaction of all applicable regulatory agency requirements, including those for effluent quality. Also within the scope of Contractor responsibility are avoidance of nuisance conditions, and performance of all necessary and required sampling, pumping, and treatment operations; operational maintenance and repair functions; and other required operations including acceptable disposal of spent carbon, waste oil, sludge, and other waste materials.

1.3.2.1 Achieve desired water flows from each extraction well to the treatment system.

1.3.2.2 Operate and maintain the treatment systems to achieve the emissions and effluent quality requirements specified in Section 01450 CHEMICAL DATA QUALITY CONTROL, Attachment A.

1.3.2.3 Perform required preventive and non-routine maintenance and maintain system operating records.

The Contractor shall continue the established maintenance program, to keep the facility in operating condition and to assure the efficient and cost-effective use of personnel, materials, and equipment. The program requirements shall include all maintenance activities described in PART 3 - EXECUTION. The maintenance program shall be focused on preventative, rather than “breakdown” maintenance. Based upon the Contractor’s best engineering and professional judgment, the Contractor may develop and implement a revised maintenance plan for the treatment facility that allows the Contractor to operate and maintain the facility in a way that meets the performance requirements of the contract, as approved by the Contracting Officer.

1.3.2.4 Operate groundwater extraction wells outside the future Pilot Area, as directed by the Government, to maintain hydraulic control of the former Process Area.

1.3.2.5 Optimize system operation to reduce O&M costs while meeting the performance standards and required emissions and discharge levels.

1.3.3 Scheduling of PM Work

Once approved by the CO, the PM schedule shall be closely adhered to by the Contractor to facilitate the Government's inspection of the work. Any proposed changes to the approved schedules must be submitted to the CO for approval not later than Wednesday of the week prior to scheduled work accomplishment. The Contractor shall correct all equipment deficiencies identified during PM inspections. The Contractor's liability is limited as specified in Section H2 paragraph H2.5, MAINTENANCE AND REPAIR COST LIMITATION. Equipment deficiencies detected during PM inspections shall be classified and corrected in accordance with paragraph SERVICE/TROUBLE CALLS.

1.4 INFLUENT AND EFFLUENT CHARACTERISTICS

1.4.1 Groundwater Characteristics

The water characteristics subject to the treatment requirements of this specification are variable. A general description of soil and groundwater contaminants is included in Section 01351, SAFETY, HEALTH, AND EMERGENCY RESPONSE (HTRW/UST).

1.4.2 Effluent Discharges

The Contractor shall operate the facility so that the facility effluent discharges are less than those listed in Attachment A of Section 01450 CHEMICAL DATA QUALITY CONTROL.

1.5 SUBMITTALS

Government approval is required for submittals with a "GA" designation; submittals having an "FIO" designation are for information only. The following shall be submitted in accordance with Section 01330 SUBMITTAL OF CONTRACT DATA.

Data

Preventative Maintenance Plan; GA

A Preventative Maintenance Plan shall be prepared based on existing equipment requirements and operating data, historical maintenance requirements and industry standard procedures. The submitted plan shall include components to be inspected and maintained, inspection and maintenance techniques, inspection and maintenance frequencies, and reporting methodology. The Contractor shall update schedules as necessary to reflect any changes in equipment inventory.

Valve Position Chart; GA

The Contractor shall develop and submit a Valve Position Chart, showing the valve positions for proper facility operation, system shutdown, and bypassing of major pieces of equipment.

Qualifications

Well Reconditioning Contractor; GA

Reports

Notification of Unscheduled Maintenance Activities Report; FIO.

The Contracting Officer shall be notified in the event unscheduled maintenance activities are required. Unscheduled maintenance activities are those activities that are not included in the maintenance program that is to be developed in accordance with paragraph: 3.8 MAINTENANCE.

Notification of Unscheduled Shut-Down Report; FIO.

The Contracting Officer shall be notified in the event of any unscheduled plant shut-down. The Contractor shall contact the Contracting Officer within a 48-hour period, documenting (for example): the reason for the problem (e.g., electrical, physical breakdown, non-compliance, etc.); personnel involved; required maintenance or corrective action; testing required; chemical analysis required; equipment required; chemicals required; estimated time of shutdown; etc.

1.6 STAFFING

1.6.1 General Qualifications

The Contractor shall provide properly qualified personnel to operate all Treatment Plant facilities. Staffing requirements shall be in accordance with Section 01430 CONTRACTOR QUALIFICATIONS.

1.6.2 Operating Staff Duties.

The responsibilities of the staff shall be as follows:

1.6.2.1 The responsibilities of the Operator include operation and maintenance of the facility, maintaining plant records, coordinating spent carbon disposal services, overseeing daily operations, and preparing reports. It shall also be the responsibility of the Operator to notify the Contracting Officer of problems with the facility that cause effluent water to exceed cleanup criteria or require significant troubleshooting and repair.

1.6.2.2. Contractor shall provide for continuous, 24 hours per day, 7 days per week operation of the Treatment Plant systems in accordance with the contract requirements. Operators shall respond to all service/trouble conditions in accordance with paragraph; SERVICE/TROUBLE CALLS under Part 3 of this Section.

1.6.3 Maintenance Duties

1.6.3.1 The Contractor shall perform all maintenance, preventative and corrective, which is required to maintain a fully operational facility. All equipment shall be kept and maintained in clean working conditions.

1.6.4 Training

Training and transition of Contractor personnel is specified under Section 01120 CONTRACT TRANSITION AND INTERFACE.

PART 2 - PRODUCTS

2.1 EQUIPMENT AND MATERIALS

Equipment and materials requirements shall conform to Section 01610 MATERIALS AND SUPPLIES.

2.1.1 Contractor furnished Items

The Contractor shall furnish all necessary tools and support equipment except as specified under Section 01150 GOVERNMENT FURNISHED PROPERTY, SERVICES, AND UTILITIES.

PART 3 - EXECUTION

3.1 TREATMENT PLANT OPERATION

After completion of transition activities, the Contractor shall assume all responsibilities to operate and maintain the entire Treatment Plant facilities except materials and work specified to be performed by other contract or by Government personnel. The Treatment Plant facilities shall be operated for water treatment on a continuous, 24 hours per day, 7 days per week schedule in accordance with the specified treatment requirements.

3.1.1 General

Treatment Plant facility operations shall be conducted in order to provide continuous, cost effective, and efficient treatment of all water delivered to the treatment facility. Such operations shall include general operation of plant equipment, valves and piping, sampling and lab analyses, waste and effluent disposal, and other related services.

(a) All operations shall be accomplished in accordance with the treatment facility performance standards and existing O&M data and procedures and approved modifications thereto.

(b) Treatment Plant facility conditions shall be maintained clean and orderly at all times and adherence to applicable health and safety standards shall be maintained.

(c) Operations shall be accomplished with proper regard to equipment and components to ensure operating efficiency and longevity of service life.

(d) The Contractor shall also optimize the system to reduce the overall O&M costs while continuing to meet all performance standards and discharge levels.

3.1.2 Treatment System Operation Requirements

The Contractor shall operate the treatment system to achieve the required Effluent Cleanup Requirement. The current treatment plant operating parameters are described in Paragraphs: OPERATION OF EXTRACTION WELLS OUTSIDE THE FUTURE PILOT AREA, and LIQUID TREATMENT PLANT below. The operation parameters may be modified during the contract period to optimize treatment system operation.

3.1.3 Unscheduled Plant Shutdowns

The Contractor shall monitor and check all Treatment Plant systems to insure optimal operations and maintain the systems such that it is never continuously shut down for more than 48 hours due to break down or other unscheduled shutdowns. The Treatment Plant shall be operated and maintained such that direct discharge of untreated system influent never occurs. Notify the COR if any Treatment Plant system is down for greater than six (6) hours when the system is scheduled to be in operation.

3.1.4 Emergency Services

For purposes of this specification, an emergency situation is defined as any condition that requires immediate action to eliminate life or serious injury hazards to personnel, prevent loss or damage to Government property, or restore essential services. Emergency services may also be necessary to accomplish certain repairs and maintenance efforts. The CO shall be notified of all emergency situations with notification time not to exceed one hour after Contractor identification of an emergency.

3.2 OPERATION OF EXTRACTION WELLS OUTSIDE THE FUTURE PILOT AREA

The Contractor shall operate the extraction wells outside the future Pilot Area, to contain NAPL and contaminated groundwater within the upper aquifer and the former Process Area. Groundwater pumping rates for each extraction well shall be directed by the Government, based on seasonal and subsurface conditions. It is anticipated that the total pumping rate for wells outside the future Pilot Area will range from 20 to 40 gpm. Fluid level measurements, NAPL removal operations, and well maintenance shall be performed according to existing operations and maintenance data and instructions, Standard Operating Procedures in APPENDIX J, and transition training specified in SECTION 1120 CONTRACT TRANSITION AND INTERFACE. Schedules for removing NAPL from the extraction wells, and criteria for determining the frequency of NAPL removal events shall be documented in the Work Plan, described in SECTION 01401 MANAGEMENT PLAN AND FIELD REPORTS.

3.3 LIQUID TREATMENT PLANT

3.3.1 General System Description

The Liquid Treatment Plant shall be operated to remove organic compounds from the water, such that the discharge limits of any of the contaminants listed in Section 01450, Attachment A are not exceeded in the treated effluent. The liquid treatment plant influent consists of flows from the extraction wells outside the future Pilot Area, decontamination pad, and rainwater sump. The liquid treatment plant consists of three phases of treatment – primary treatment, secondary treatment, and tertiary treatment. Primary treatment shall remove any free product from extracted liquid using an existing depurator. Secondary treatment shall remove organic compounds in the water stream using an aeration basin. The aeration basin contains microbes acclimated to operating temperatures and influent concentrations. Tertiary treatment polishes the effluent from the aeration basin using a train of mulitmedia filters and a train of granular activated carbon (GAC) adsorbers.

The liquid treatment plant shall be optimized to the extent possible to efficiently remove the organic compounds. Analytical testing shall occur to determine microbial “health” in the aeration basin. The media filters shall be backwashed when filters reach saturation. When analytical testing indicates that "breakthrough" has occurred, the carbon within the vessels shall be changed out. Breakthrough is defined as the point at which the water leaving the lag GAC adsorber has a detection of contaminants of those in the ROD Remediation Requirement listed in Attachment A of Section 01450 CHEMICAL DATA QUALITY CONTROL. The Contractor shall follow the sampling requirements in Section 01450 CHEMICAL DATA QUALITY CONTROL to aid in determining bioereactor efficiency and the frequency of the carbon bed changeout.

Three GAC adsorbers shall be used to polish treated groundwater. Two adsorbers in each train shall be in operation (lead and lag) at a time with one adsorber out of service for carbon replacement or maintenance. GAC adsorbers use the packed-bed, downflow configuration.

During carbon replacement, the system requires a water supply of 4,000 gallons per unit and compressed air supply of 100 cfm. The water shall be provided from the Treated Effluent and the air shall be supplied from the portable compressor located on the Treatment Plant pad. The Contractor shall be responsible for carbon change-out and disposal of the carbon.

3.3.2 Carbon Disposal

Available data should be used for carbon profile unless operation changes significantly. The Contractor shall label (manifest and placard if necessary), and transport spent GAC in accordance with Section 02120 TRANSPORTATION AND DISPOSAL OF HAZARDOUS AND NON-HAZARDOUS MATERIALS to a suitable regeneration or disposal facility. Should the spent GAC exceed the regulatory limits, the material shall be transported to a RCRA Subpart B permitted facility for disposal or regeneration. Accordingly, analysis of the spent GAC after removal from the vessel is required only if the disposal facility requires additional profile data. Only disposal facilities that are approved under the CERCLA Offsite Rule shall be used.

3.3.3 Multimedia Filter Media Disposal

Spent filter media disposal shall follow procedures described for spent carbon disposal (Paragraph 3.3.2).

3.3.4 Sludge Disposal

Sludge produced by the biological treatment shall be transported in accordance with Section 02120 TRANSPORTATION AND DISPOSAL OF HAZARDOUS AND NON-HAZARDOUS MATERIALS to a suitable disposal facility.

3.3.5 Product Disposal

Product collected in the product storage tank shall be transported to a suitable disposal facility in accordance with Section 02120 TRANSPORTATION AND DISPOSAL OF HAZARDOUS AND NON-HAZARDOUS MATERIALS.

3.3.6 Operation

The liquid treatment plant shall be operated at a flow rate as designated by the Government representative. The maximum flow rate through the liquid treatment plant is 80 gallons per minute (gpm). However, flow rate will typically be 20 to 40 gpm.

3.4 TROUBLESHOOTING

3.4.1 In the event that effluent water quality exceeds the Effluent Cleanup Requirement in Attachment 01450-A for one or more of the compounds, the Contractor shall:

3.4.1.1 Notify the Contracting Officer in writing within 4 hours of the receipt of test results showing that effluent water quality exceeds the effluent limits.

3.4.1.2 Take immediate and appropriate action to correct the problem and achieve the required effluent concentrations.

3.4.1.3 If minor adjustments do not alleviate the problem and the Contracting Officer has been notified, it may be necessary to reduce flow from the extraction wells at the site. This shall only be done after approval by the Contracting Officer.

3.4.1.4 Under extreme emergency, such as major plant malfunctions, the malfunctioning unit may be bypassed and portions of the extraction well network may be temporarily shut down in order to make appropriate repairs.

3.4.2 In the event that the microbial population cannot manage influent contaminant concentrations, the Contractor shall follow procedures outlined in the existing O&M data and procedures. Actions shall include, but not be limited to:

3.4.2.1 Decrease influent flow into aeration basin;

3.4.2.2 Supply microbes with an supplemental food source;

3.4.2.3 Gradually re-acclimate microbes to operating conditions;

3.4.2.4 Bypass aeration basin

3.5 SERVICE/TROUBLE CALLS

Service or trouble calls are defined as maintenance and repair requirements which are called into the Contractor by automated alarm system in the plant or by Contractor furnished alarm system or generated by on-site Contractor operator or by authorized Government Representatives. This category includes services requiring either routine, urgent or emergency response.

3.5.1 Service Call Reception

The Contractor shall have adequate procedures for picking up service call work during normal working hours, and for receiving and responding to emergency service calls 24 hours per day, including weekends and during holidays. A single local telephone number shall be provided by the Contractor for receiving emergency calls.

3.5.1.1 Normal Working Hours

The Contractor shall receive service call requests from any source as described above during normal working hours and classify each call in accordance with the definitions provided below. If the call is classified as emergency, the Contractor shall notify the COR by phone of the nature of the event causing the call response.

3.5.1.2 After Normal Working Hours

The Contractor shall receive and respond to emergency service call requests directly from the automated alarm system after normal working hours, on weekends, and holidays. If the call is classified as emergency, the Contractor shall notify the COR by phone of the nature of the event causing the call

response during normal Government working hours if possible except if work would exceed the cost limitation for corrective maintenance the Contractor shall proceed in accordance with 3.5.2.1.

3.5.2 Service Call Classification

3.5.2.1 Emergency calls.

Service calls will be classified as an emergency call when the work consists of correcting failures which constitute an immediate danger to personnel, threaten to damage property, or are required to restore essential services. The Contractor shall respond immediately and must be on the job site and working within 90 minutes after receipt of an emergency service call. The Contractor shall work continuously without interruption and shall arrest the emergency condition before departing the job site. Emergency work is usually a response-type work effort, often initially worked by Trouble Call technicians. Due to its nature, emergency work is not restricted to a level of effort such as within the limit for corrective maintenance (although it may fall within the labor hour and/or dollar limit for trouble calls and corrective maintenance). If the Contracting Officer determines that the scope of the emergency call is beyond the scope of work up to the Contractor's cost limit for corrective maintenance, the work will be stabilized to eliminate personnel hazards and further damage to the facility and its contents (at no dollar limit to the Contractor) and the work to complete the call will then be accomplished under the indefinite quantity portion of the contract as a repair. The Contractor will proceed in an urgent but cost effective manner until the work is accomplished.

3.5.2.2 Urgent calls.

Urgent service calls, for purposes of this specification, include those services which do not immediately endanger personnel or threaten damage to property, but would soon inconvenience and affect the health or well-being of personnel. Urgent service calls resulting in corrective maintenance shall be accomplished during Government normal working hours, or on second or split shifts when within the capability of Contractor personnel, and shall be completed or arrested within two working days after receipt.

3.5.2.3 Routine calls.

Service calls will be classified as routine when the work does not qualify as an emergency or urgent response. All routine calls resulting in corrective maintenance must be completed within 14 working days after receipt, and once begun, the work shall be prosecuted to completion. Routine calls shall normally be accomplished during normal work hours, Monday through Friday.

3.5.3 Required Log Records

The Contractor shall record the following information for each service call:

(a) Type of call (classification).

(b) Description of work actually completed (if different from original work description).

(c) Brief description of material and parts used, including quantities.

(d) Date and time work began.

(e) Date and time work was completed.

(f) Signature or initials of the Contractor's craftsman performing the work (or supervisor), indicating the work has been completed.

Records shall be maintained by the Contractor on the status of all trouble calls and resulting corrective maintenance and such status shall be provided to the Government upon request from authorized Government representatives.

3.5.4 Beyond the Scope of Corrective Maintenance Cost Limitation

If the Contractor responds to an urgent or routine service call and believes that the work required is beyond the scope of corrective maintenance cost limits, as defined in the "MAINTENANCE AND REPAIR COST LIMITATION" clause (H2.5), the Contractor shall notify the COR not later than the following workday. The Contractor shall attach a summary of the work needed and a detailed estimate showing labor hour and material requirements. The COR may waive the requirement to submit estimates in cases where the scope of work is clearly beyond that of a service call.

3.5.4.1 If the COR agrees that the work required is beyond the scope of corrective maintenance within the Contractor’s cost limits, the scope of the work may be reduced, the work may be accomplished under the indefinite quantity portion of the contract, (under WAD or Task Order procedures) or by means other than this contract, or the work may be canceled.

3.5.4.2 If the COR determines that the work falls within the scope of corrective maintenance, the work shall be completed within the specified working days from the original receipt date/time for the work, plus the amount of time the work authorization was held by the COR for determination.

3.5.5 Materials and Equipment

The Contractor shall maintain sufficient off-the-shelf materials and equipment on hand to support trouble call and corrective maintenance requirements. Lack of availability of materials or equipment will not relieve the Contractor from the requirement to complete trouble call and corrective maintenance within the time limits specified.

3.6 PLANT INSPECTIONS

The Contractor shall perform monthly site and facility inspections. The inspection shall include, as a minimum, inspection of all the process components, pumps, compressors, electrical and hydraulic systems. Inspection results shall be documented in the DCQCRs.

3.7 MAINTENANCE

3.7.1 General Requirements.

The Contractor is responsible for the inspection, maintenance (preventive and corrective) of all components of the Treatment Plant including groundwater extraction and treatment systems and treatment site. No additional payments shall be made for unscheduled maintenance of the equipment and system covered by warranties. The Contractor is responsible under the firm fixed-price portion of the contract for the following items of work.

3.7.1.1 Preventative Maintenance (PM) Program

A preventative maintenance program shall be implemented by the Contractor in order to help prevent and correct deficiencies with equipment items, thus minimizing breakdowns, extending component service life, and maximizing operating efficiency. The Contractor shall prepare and submit for review a completed PM plan. PM shall include inspections and services of lubrication, minor adjustment, and minor repair of components. This plan shall be formatted to include a schedule showing 12 consecutive months and indicating specific maintenance/inspection items to be accomplished during any particular month. When completed, each component within every system included in the contract will have been addressed. The PM program is to be established based upon manufacturers' recommendations, handbooks, operating/service manuals, Contractor expertise, and general engineering judgments.

3.7.1.2 Service/Trouble Calls

The Contractor is responsible for all service/trouble calls. Refer to requirements under paragraph SERVICE/TROUBLE CALLS. Certain costs related to Service/Trouble Call are subject to the Clause in Section H2 under paragraph H2.5 "MAINTENANCE AND REPAIR COST LIMITATION" for the Contractor’s cost liability.

3.7.1.3 Corrective and Minor Maintenance and Repair

Corrective and minor maintenance and repairs shall be performed as required during the course of routine operations discovered as a result of PM inspections or service/trouble calls. All corrective maintenance and repair work shall be performed by the Contractor. The cost of corrective maintenance and repair work which is included in the firm fixed-price portion of the contract is limited as specified in Section H2, paragraph H2.5, entitled "MAINTENANCE AND REPAIR COST LIMITATION.”

3.7.1.4 Extraction System.

3.7.1.4.1 The primary requirement for maintenance of the extraction system will be prompt identification and removal of sedimentation, encrustation, and bacteria growth. Plugging due to these causes may be identified by:

- Excessive pump cycling or short duration on-cycle.
- Removal and inspection of submerged pumping components.

- Inability to maintain desired extraction or water levels within operating range of pumps.

3.7.1.4.2 In the event an extraction well becomes plugged, due to encrustation, bacterial growth or sediment, the Contractor shall remove the plugging by hydraulic means approved by the Contracting Officer's Representative (such as surging, jetting, power flushing or backwashing) to restore the efficiency of the well. Wastewater generated by the hydraulic activities shall be treated at the on-site ground water treatment system. Well screens may require cleaning by means of a chemical (acid) wash. Chemical treatment should only be conducted by a firm that specializes in well rehabilitation and should use methods that have been employed successfully and without degradation of well materials or ground water quality in the vicinity of the well. Selection of the well reconditioning firm requires the concurrence of the Contracting Officer. Costs for extraction well reconditioning in excess of the limits under Clause H2.5 will be performed under the indefinite quantity portion of the contract.

3.7.1.5 Supplies and Spare Parts. At the conclusion of the operation contract period, the Contractor shall ensure that all supplies and spare parts are restocked as stated in Section 01610 MATERIALS AND SUPPLIES.

3.7.2 Manual Shutdown

Manual system shutdown shall be only with the prior approval of the Contracting Officer. The length of time for system shutdown shall be minimized.

3.8 GENERAL REQUIREMENTS AND PROCEDURES FOR NON RECURRING (INDEFINITE QUANTITY) WORK

Non recurring work is defined as maintenance, repair, and service type work requirements that are beyond the scope of trouble calls and corrective maintenance (as defined in Clause H2.5), work not separately identified on the price SCHEDULE, and work that cannot be scheduled on a regular basis. All of this work is included in the indefinite quantity portion of the contract and includes the following: Maintenance schedule exceeding one year, Repair, Minor Construction, Replacement of Obsolete Items and Government Service Requests. The work also includes non-recurring support services, such as unscheduled painting, repair of roofing systems, repair of heating and ventilation systems and undefined maintenance and repair to all support buildings and associated site features.

3.8.1 Ordering of Indefinite Quantities Work Items

3.8.1.1 Emergency or Urgent Services

The Contractor shall follow the procedures of the Clause H2.6 REPAIR AND REPLACEMENT under the SPECIAL CONTRACT REQUIREMENTS - SERVICES

3.8.1.2 Routine Services

The Contracting Officer will order this work by issuing a task order in accordance with Section: 01250 TASK ORDER PROCEDURES.

3.9 CERTIFICATION

Contractor, in conjunction with the CO, shall conduct an inspection of the plant facilities at least 45 calendar days prior to the completion of each contract period (for any 6 month or longer base or option contract period). Any deficiencies noted during the inspection shall be corrected prior to completion of the contract period and within the schedules for service call work. The Contractor shall certify that the facility has met applicable standards, design parameters, and discharge levels, and document correction of any deficiencies and corrective actions before the contract can be considered complete.

3.10 CONTRACTOR QUALITY CONTROL

The Contractor shall perform quality control in accordance with Section 01451B CONTRACTOR QUALITY CONTROL - SERVICES.

3.11 RECORD KEEPING

3.11.1 Operation Log

A log book shall be maintained and shall be used to record notes on the daily operation of the system, including any problems, shutdown, and unusual operations. Entries shall be made for each day that the O&M personnel are at the plant.

Operating Data

- Operating conditions, flow/discharge/pressure/temperature records
- Sampling and analysis data
- Spare parts and supply inventory (monthly)
- Operating cost records
- Optimization procedures

Table 1. EXTRACTION SYSTEM

Equipment	Item	Information
Liquid Extraction Wells (Non-Pilot)		
	Number of units:	7
	Design Liquid Flow Rate:	20 gpm est. max. per well
	Depth:	40-61 feet
	Casing diameter:	8 inches
	Casing material:	316 stainless steel
	Well screen opening:	0.01-0.10 inch
Granular Activated Carbon	Number of units:	3
	Fluid:	Treated groundwater
	Construction:	Epoxy-coated carbon-steel
	Carbon volume:	353 ft^3/unit
	Amount of carbon:	7,500 lb/unit
Multimedia Filters	Number of Units:	2
	Fluid:	Treated Groundwater
	Construction:	Epoxy coated carbon steel
	Filter volume:	75 ft^3/unit
Aeration Basin	Fluid:	Influent groundwater
	Construction:	Epoxy coated carbon steel
	Tank volume:	113,245 gallons

END OF SECTION

SECTION 02120

TRANSPORTATION AND DISPOSAL OF HAZARDOUS AND NON-HAZARDOUS MATERIALS

PART 1 GENERAL

1.1 OVERVIEW

The Contractor is advised that transportation of hazardous materials that do not leave this Superfund site do not invoke the DOT requirements for labeling and the RCRA Land Disposal Restrictions. The following non-hazardous materials may be transported off-site for recycle or disposal: herbaceous vegetation and smaller branches if determined to be a fire hazard; and solid waste (non-hazardous) from on-site activities. All disposal of hazardous and non-hazardous waste shall be conducted in compliance with the CERCLA Off-site Rule.

1.2 REFERENCES

The publications listed below form a part of this specification to the extent referenced. The publications are referred to in the text by basic designation only.

CODE OF FEDERAL REGULATIONS (CFR)

40 CFR 61	National Emission Standards for Hazardous Air Pollutants
40 CFR 122	EPA Administered Permit Programs: The National Pollutant Discharge Elimination System
40 CFR 125	Criteria and Standards for the National Pollutant Discharge Elimination System
40 CFR 260	Hazardous Waste Management System: General
40 CFR 261	Identification and Listing of Hazardous Waste
40 CFR 262	Standards Applicable to Generators of Hazardous Waste
40 CFR 263	Standards Applicable to Transporters of Hazardous Waste
40 CFR 264	Standards for Owners and Operators of Hazardous Waste Treatment, Storage, and Disposal Facilities
40 CFR 265	Interim Status Standards for Owners and Operators of Hazardous Waste Treatment, Storage, and Disposal Facilities

40 CFR 266	Standards for the Management of Specific Hazardous Wastes and Specific Types of Hazardous Waste Management Facilities
40 CFR 268	Land Disposal Restrictions
40 CFR 270	EPA Administered Permit Programs: The Hazardous Waste Permit Program
40 CFR 279	Standards for the Management of Used Oil
40 CFR 300	National Oil and Hazardous Substances Pollution Contingency Plan
40 CFR 302	Designation, Reportable Quantities, and Notification
40 CFR 761	Polychlorinated Biphenyls (PCBs) Manufacturing, Processing, Distribution in Commerce, and Use Prohibitions
40 CFR 355	Emergency Planning and Notification
40 CFR 403	General Pretreatment Regulations for Existing and New Sources of Pollution
49 CFR 107	Hazardous Materials Program Procedures
49 CFR 171	General Information, Regulations and Information
49 CFR 172	Hazardous Materials Table, Special Provisions, Hazardous Materials Communications, Emergency Response Information, and Training Requirements
49 CFR 173	Shippers - General Requirements for Shipments and Packagings
49 CFR 177	Carriage by Public Highway
49 CFR 178	Specifications for Packagings

WASHINGTON ADMINISTRATIVE CODE (WAC)

WAC 173-303	Washington Dangerous Waste Regulations

1.3 SUBMITTALS

Government approval is required for submittals with a "GA" designation; submittals having an "FIO" designation are for information only. The following shall be submitted in accordance with Section 01330 SUBMITTAL OF CONTRACT DATA.

1.3.1 SD-9 Report

Waste Management Plan; GA.

Prior to completion of transition activities, the Contractor shall prepare a Waste Management Plan as part of the Management Plan (See Section 01401 MANAGEMENT PLAN AND FIELD REPORTS) detailing the manner in which hazardous and non-hazardous wastes shall be managed and describing the types and volumes of wastes anticipated to be managed as well as the management practices to be utilized. The following is an outline of requirements, at a minimum, which shall be included in the WMP:

1. General description of the activities generating the wastes/materials to be managed.
2. The personnel, organization, and training qualifications of all persons working on this project.
3. Equipment, methods and procedures for all work to be performed for material handling (especially for materials remaining onsite), transportation and disposal. Include the method to be used for determining carbon loading for PAH compounds and PCP.
4. The estimated start date, completion date, and field work times.
5. The names of all companies and contractors to be associated with the staging, treatment, preparation, transportation, and ultimate disposal of the waste.
6. A written commitment to the direct transportation of the waste to an approved recycling/reuse and disposal facility and the expeditious final disposal of the waste.
7. A detail description of the route(s) that the transporter will take after the waste is retrieved from the site (a map is acceptable). As a minimum, a primary route and a secondary route shall be described in the plan.
8. The name, location, point-of-contact, EPA identification, verification that the transporter is a licensed Hazardous Waste Transporter in accordance with DOT regulations, and the Notice of Violation (N.O.V.) status.
9. The facility name, location, point-of-contact, telephone number.
10. The method of measuring the debris that will be stockpiled on site in addition to specifying areas on site where hazardous wastes are to be handled/stockpiled.
11. A table of the wastes that will be generated along with the respective waste stream designation (on-site hazardous waste, off-site hazardous waste, off-site dangerous waste, off-site non-hazardous, method of disposal, expected RCRA waste code, and disposal site name.
12. A recycling and solid waste minimization plan with a list of measures to reduce consumption of energy and natural resources. The plan shall detail the Contractor’s actions to comply with and to participate in Federal, State, Regional and local government sponsored recycling programs to reduce the volume of solid waste at the source.

13. Methods or procedures to encourage Affirmative Procurement of EPA designated items or items that can be made with recovered materials.

The Contractor shall incorporate any revisions to this contract into the necessary portions of the WMP.

1.3.2 SD-09 Reports

Recordkeeping; GA.

Information necessary to file state annual or EPA biennial reports for all hazardous waste transported, treated, stored, or disposed of under this contract. The Contractor shall not forward these data directly to the regulatory agency but to the Contracting Officer (CO) at the specified time. The submittal shall contain all the information necessary for filing of the formal reports in the form and format required by the governing Federal or state regulatory agency. A cover letter shall accompany the data to include the contract number, Contractor name, and project location.

Spill Response; FIO.

In the event of a spill or release of a hazardous substance (as designated in 40 CFR 302), or pollutant or contaminant, or oil (as governed by the Oil Pollution Act (OPA), 33 U.S.C. 2701 et seq.), the Contractor shall notify the CO immediately (not to exceed one hour). If the spill exceeds a reporting threshold, the Contractor shall follow the pre-established procedures for immediate reporting to the CO. (For procedures, reference the Spill Prevention Control and Countermeasure Plan of the Environmental Protection Plan, Specification Section 01410 ENVIRONMENTAL PROTECTION.)

Exception Reports; GA.

In the event that a manifest copy documenting receipt of hazardous waste at the treatment, storage, and disposal facility is not received within 35 days of shipment initiation, the Contractor shall prepare and submit an exception report to the CO within 37 days of shipment initiation.

1.3.3 SD-13 Certificates

Qualifications; FIO.

Copies of the current certificates of registration issued to the Contractor and/or subcontractors or written statements certifying exemption from these requirements.

Off-Site Policy Compliance Certification; GA.

A letter certifying that EPA considers the facilities to be used for all off-site disposal to be acceptable in accordance with the Off-Site policy in 40 CFR 300, Section .440. This certification shall be provided for wastes from Resource Conservation and Recovery Act (RCRA), 42 U.S.C. 6901 et seq., sites as well as from Comprehensive Environmental Response Compensation and Liability Act (CERCLA), 42 U.S.C. 9601 et seq., responses. See Attachment 02120-A sample certification at the end of this section. This certification must be submitted to the CO two weeks prior to the scheduled date for shipment.

Certificates of Disposal; FIO.

Certificates documenting the ultimate disposal of hazardous wastes within 180 days of initial shipment. Receipt of these certificates will be required for final payment.

Packagings Certification; GA.

All transportation-related shipping documents shall be submitted to the CO, including draft hazardous waste manifests; draft land disposal restriction notifications; draft bill of ladings for hazardous and nonhazardous materials; lists of corresponding proposed labels, packages, marks, and placards to be used for shipment; waste profiles and supporting waste analysis documents, for review a minimum of 14 days prior to anticipated pickup. Packaging assurances shall be furnished prior to transporting hazardous material. Generator copies of hazardous waste manifests, land disposal restriction notifications, generator copies of manifests, bill of ladings for hazardous and nonhazrdous materials, and supporting waste analysis documents shall be furnished when shipments are originated. Receipt copies of waste shipment records at the designated disposal facility shall be furnished not later than 35 days after acceptance of the shipment.

1.3.4 SD-18 Records

Notices of Non-Compliance and Notices of Violation; FIO.

Notices of non-compliance or notices of violation by a Federal, state, or local regulatory agency issued to the Contractor in relation to any work performed under this contract. The Contractor shall immediately provide copies of such notices to the CO. The Contractor shall also furnish all relevant documents regarding the incident and any information requested by the CO, and shall coordinate its response to the notice with the CO or his designated representative prior to submission to the notifying authority. The Contractor shall also furnish a copy to the CO of all documents submitted to the regulatory authority, including the final reply to the notice, and all other materials, until the matter is resolved.

1.4 QUALIFICATIONS

1.4.1 Transportation And Disposal Coordinator

The Contractor shall designate, by position and title, one person to act as the Transportation and Disposal Coordinator (TDC) for this contract. The TDC shall serve as the single point of contact for all environmental regulatory matters and shall have overall responsibility for total environmental compliance at the site including but not limited to accurate identification and classification of hazardous waste and hazardous materials; determination of proper shipping names; identification of marking, labeling, packaging, and placarding requirements; completion of waste profiles, hazardous waste manifests, bill of ladings, exception and discrepancy reports; and all other environmental documentation. The TDC shall have, at a minimum, five years of specialized experience in the management and transportation of hazardous waste.

1.4.2 Training

The Contractor's hazardous materials employees shall be trained, tested, and certified to safely and effectively carry out their assigned duties in accordance with Section 01351 SAFETY, HEALTH AND

EMERGENCY RESPONSE (HTRW/UST). The Contractor's employees transporting hazardous materials or preparing hazardous materials for transportation shall be trained, tested, and certified in accordance with 49 CFR 172.

1.4.3 Certification

The Contractor and/or subcontractors transporting hazardous materials shall possess a current certificate of registration issued by the Research and Special Programs Administration (RSPA), U.S. Department of Transportation, when required by 49 CFR 107, Subpart G.

1.5 LAWS AND REGULATIONS REQUIREMENTS

Work shall meet or exceed the minimum requirements established by Federal, state, and local laws and regulations that are applicable. These requirements are amended frequently and the Contractor shall be responsible for complying with amendments as they become effective. In the event that compliance exceeds the scope of work or conflicts with specific requirements of the contract, the Contractor shall notify the CO immediately.

1.6 DEFINITIONS

a. Hazardous Material. A substance or material which has been determined by the Secretary of Transportation to be capable of posing an unreasonable risk to health, safety, and property when transported in commerce, and which has been so designated pursuant to the Hazardous Materials Transportation Act, 49 U.S.C. Appendix Section 1801 et seq. The term includes materials designated as hazardous materials under the provisions of 49 CFR 172, Sections .101 and .102 and materials that meet the defining criteria for hazard classes and divisions in 49 CFR 173. EPA designated hazardous wastes are also hazardous materials.

b. Hazardous Waste. A waste that meets criteria established in RCRA or specified by the EPA in 40 CFR 261 or which has been designated as hazardous by a RCRA authorized state program.

c. Clean Debris Surface. A “clean debris surface” is defined as a surface that, when viewed without magnification, shall be free of all visible contaminated soil and hazardous waste, except that residual staining caused by soil and waste consisting of light shadows, slight streaks, or minor discoloration, and soil and waste in cracks, crevices, and pits may be present provided that such staining and soil and waste in cracks, crevices, and pits shall be limited to no more than 5% of each square inch of surface area. The definition allows a minor residual staining caused by soil and waste to remain in cracks, crevices, and pits of up to 5% of each square inch of surface area because of the impracticability of cleaning debris to an “original surface finish.” The 5% surface area criterion is applied to each square inch of the debris surface that has been contaminated with hazardous waste. The area covered by large stains cannot be averaged against large unstained areas. Only 5% of the area within any square inch can contain a residual stain.

d. Contaminated Debris. Debris which has come into contact with soils or any other type of foreign material on site shall be considered a contaminated debris. The foreign material may or may not be a hazardous material. Since F032 and F034 wastes are known to be on site, all

stained debris and other materials which have been in contact with free product shall be considered to have been in contact with a listed waste. *Characteristic debris.* Hazardous debris that exhibits the characteristic of ignitability, corrosivity, or reactivity identified under §§ 261.21, 261.22, and 261.23 of this chapter, respectively, must be deactivated by treatment using one of the technologies identified in Table 1 40 CFR 268.45. *Debris contaminated with listed waste.* The contaminants subject to treatment for debris that is contaminated with a prohibited listed hazardous waste are those constituents or wastes for which treatment standards are established for the waste under § 268.40.

e. Debris. Debris is considered a solid material that exceeds 2.5 inches in particle size. Debris can be a manufactured object, plant or animal matter, or natural geologic material.

f. Disposal. Removal of hazardous and non-hazardous wastes and/or debris to a facility which will recycle/reuse, treat, or landfill the material and/or debris is considered "Disposal."

g. Gross Decontamination. Removal of soils and other foreign material on debris with the use of high pressure water or other suitable method that removes soils or mud from a debris surface.

h. Hazardous Debris. Hazardous Debris means debris that contains a hazardous waste listed in 40 CFR 261 subpart D, or that exhibits a characteristic of hazardous waste identified in 40 CFR 261 subpart C. Any deliberate mixing of prohibited hazardous waste with debris that changes its treatment classification (i.e., from waste to hazardous debris) is not allowed under the dilution prohibition in § 268.3.

i. Recycle. A material is considered "recycled" if it is used, reused, or reclaimed.

1.7 SITE-SPECIFIC INFORMATION

This section provides guidance for treatment, transportation, and disposal of all the wastes and debris. The Contractor shall perform all work in accordance with all local, state, and Federal regulations governing solid/hazardous/toxic wastes, and the terms and conditions of this contract. The Contractor shall furnish all personnel, services, and equipment necessary to conduct the work described herein. The Contractor shall provide all submittals as described in this Section.

1.7.1 Location/Description of the waste

The following is a list of the anticipated wastes that may be encountered:

- Spent filter media
- Spent granular activated carbon
- Recovered NAPL product (Creosote))
- Dewatered biosolids/sludge
- Sump sediments
- Aeration basin sediments
- Separator sediments
- Solid wastes from on-site activities

- Creosote (FO32 and FO34) contaminated material (pads, used PPE)

1.7.2 Known Waste Streams

The Wastes specified in Paragraph 1.7.1 shall be categorized for disposal purposes based on visual inspection or via sampling as discussed in Section 01450 CHEMICAL DATA QUALITY CONTROL. The waste streams identified for disposal include:

- Spent granular activated carbon: perform carbon loading calculations. If the amount of PAHs and PCP exceeds the universal treatment standards for waste codes F032 and F034, the carbon shall be incinerated; otherwise, the carbon may be disposed of in a subtitle C landfill.
- Spent filter media: sample for NAPL constituents and D-listed components. The spent filter media shall be designated as F032, F034, and potentially D025 (p-cresol), D037 (pentachlorophenol), and WP03 (reference WAC 173-303-100 (6)) depending on results and incinerated..
- Recovered NAPL product (Creosote)): shall be designated as F032, F034, D025 (p-cresol), D037 (pentachlorophenol), WP03 (EHW) and sent off-site for incineration.
- Dewatered biosolids/sludge: sample for NAPL constituents and D-listed components. The biosolids/sludge shall be designated as F032, F034, and potentially D025 (p-cresol), D037 (pentachlorophenol), and WP03 (reference WAC 173-303-100 (6)) depending on results and incinerated.
- Sump sediments: sample for NAPL constituents and D-listed components. The sediments shall be designated as F032, F034, and potentially D025 (p-cresol), D037 (pentachlorophenol), and WP03 (reference WAC 173-303-100 (6)) depending on results and incinerated.
- Aeration basin sediments: sample for NAPL constituents and D-listed components. The sediments shall be designated as F032, F034, and potentially D025 (p-cresol), D037 (pentachlorophenol), and WP03 (reference WAC 173-303-100 (6)) depending on results and incinerated.
- Separator sediments: sample for NAPL constituents and D-listed components. The sediments shall be designated as F032, F034, and potentially D025 (p-cresol), D037 (pentachlorophenol), and WP03 (reference WAC 173-303-100 (6)) depending on results and incinerated.
- Solid wastes from on-site activities: off-site as non-hazardous waste.
- Creosote (FO32 and FO34) contaminated material (sorbent pads, used PPE)
- On-site analytical wastes: lab pack and dispose of according to contents.

1.7.3 Unknown Waste Stream

The Government shall be notified of all waste not listed above (paragraph 1.7.1) within 24 hours of discovery. Wastes not listed above shall not leave the site until authorized by the Government.

PART 2 PRODUCTS

2.1 MATERIALS

The Contractor shall provide all of the materials required for the packaging, labeling, marking, placarding, and transportation of hazardous wastes and hazardous and nonhazardous materials in conformance with Department of Transportation standards. Details in this specification shall not be construed as establishing the limits of the Contractor's responsibility.

2.1.1 Packagings

The Contractor shall provide bulk and non-bulk containers for packaging hazardous materials/ wastes consistent with the authorizations referenced in the Hazardous Materials Table in 49 CFR 172.101, Column 8. Bulk and non-bulk packaging shall meet the corresponding specifications in 49 CFR 173 referenced in the Hazardous Materials Table, 49 CFR 172.101. Each packaging shall conform to the general packaging requirements of Subpart B of 49 CFR 173, to the requirements of 49 CFR 178 at the specified packing group performance level, to the requirements of special provisions of column 7 of the Hazardous Materials Table in 49 CFR 172.101, and shall be compatible with the material to be packaged as required by 40 CFR 262. The Contractor shall also provide other packaging-related materials such as materials used to cushion or fill voids in overpacked containers, etc. Sorbent materials shall not be capable of reacting dangerously with, being decomposed by, or being ignited by the hazardous materials being packaged. Additionally, sorbents used to treat free liquids to be disposed of in landfills shall be non-biodegradable as specified in 40 CFR 264.314.

2.1.2 Markings

The Contractor shall provide markings for each hazardous material/waste package, freight container, and transport vehicle consistent with the requirements of 49 CFR 172, Subpart D, 40 CFR 262.32 (for hazardous waste) 40 CFR 761. Markings must be capable of withstanding, without deterioration or substantial color change, a 180-day exposure to conditions reasonably expected to be encountered during container storage and transportation.

2.1.3 Labeling

The Contractor shall provide primary and subsidiary labels for hazardous materials/wastes consistent with the requirements in the Hazardous Materials Table in 49 CFR 172.101, Column 6. Labels shall meet design specifications required by 49 CFR 172, Subpart E including size, shape, color, printing, and symbol requirements. Labels shall be durable and weather resistant and capable of withstanding, without deterioration or substantial color change, a 180-day exposure to conditions reasonably expected to be encountered during container storage and transportation.

2.1.4 Placards

For each off-site shipment of hazardous material/waste, the Contractor shall provide primary and subsidiary placards consistent with the requirements of 49 CFR 172, Subpart F. Placards shall be provided for each side and each end of bulk packaging, freight containers, transport vehicles, and rail cars requiring

such placarding. Placards may be plastic, metal, or other material capable of withstanding, without deterioration, a 30-day exposure to open weather conditions and shall meet design requirements specified in 49 CFR 172, Subpart F.

2.1.5 Spill Response Materials

The Contractor shall provide spill response materials including, but not limited to, containers, adsorbent, shovels, and personal protective equipment (PPE). Spill response materials shall be available at all times in which hazardous materials/wastes are being handled or transported. Spill response materials shall be compatible with the type of material being handled.

2.2 EQUIPMENT AND TOOLS

The Contractor shall provide miscellaneous equipment and tools necessary to handle hazardous materials and hazardous wastes in a safe and environmentally sound manner.

PART 3 EXECUTION

3.1 MATERIALS HANDLING

3.1.1 Staging

The assorted debris shall be staged accordingly in an easily accessible location which shall be subject to approval from the COR. Drums shall be placed on palettes, labeled, and covered. Staged debris that will leave the site shall be placed in areas approved by the COR and shall be protected from further contamination from the soils on site. The Contractor shall allow the COR to inspect all waste at the staging area prior to removal from the site. The COR may request further gross decontamination if determined to be necessary by the COR. The COR may direct the Contractor to relocate staged materials as site conditions change. The staged material stockpiles shall be constructed such that water run off from the piles will not enter the harbor.

3.1.2 Off-Site Waste Designations

Refer to paragraph 1.7.2 above.

3.1.3 Removal and Recycling/Disposal of Miscellaneous Non-Hazardous Waste

A receipt from the disposal facility(ies) shall be obtained, including certified weight slips if applicable, and included in the Final Report. Any non-hazardous waste with no salvageable value shall be loaded and transported to the local solid waste landfill and certified weight slips obtained. The Contractor shall certify in writing that which is considered non-hazardous waste. The same requirements for a receipt shall be met for solid waste that is landfilled.

3.2 ON-SITE HAZARDOUS WASTE MANAGEMENT

Contractors are prohibited by 10 U.S.C. 2692 from storing Contractor-owned waste on site for any length of time. The Contractor shall be responsible for ensuring compliance with all Federal, state, and local hazardous waste laws and regulations and shall verify those requirements when preparing reports, waste shipment records, hazardous waste manifests, or other documents.

3.2.1 Hazardous Waste Classification

The Contractor, in consultation with the CO, shall identify all waste codes applicable to each hazardous waste stream based on requirements in 40 CFR 261 or any applicable state or local law or regulation. The Contractor shall also identify all applicable treatment standards in 40 CFR 268 and state land disposal restrictions and shall make a determination as to whether or not the waste meets or exceeds the standards. Waste profiles, analyses, classification, and treatment standards information shall be submitted to CO for review and approval.

3.2.2 Accumulation

When accumulating hazardous waste on site, the Contractor shall comply with generator requirements in 40 CFR 262 and any applicable state or local law or regulations. On-site accumulation times shall be restricted to applicable time frames referenced in 40 CFR 262, Section .34 and any applicable state or local law or regulation. Accumulation start dates shall commence when waste is first generated (i.e., containerized or otherwise collected for discard).

3.2.3 Containerized Waste

The Contractor shall only use containers in good condition and compatible with the waste to be stored. The Contractor shall be responsible for ensuring containers are closed except when adding or removing waste. The Contractor shall be responsible for immediately marking all hazardous waste containers with the words "hazardous waste" and other information required by 40 CFR 262, Section .32 and any applicable state or local law or regulation as soon as the waste is containerized. An additional marking shall be placed on containers of "unknowns" designating the date sampled, and the suspected hazard. The Contractor shall be responsible for inspecting containers for signs of deterioration and shall be responsible for responding to any spills or leaks.

3.2.4 Inspection

The Contractor shall inspect all hazardous waste areas weekly and shall provide written documentation of the inspection. Inspection logs will contain date and time of inspection, name of individual conducting the inspection, problems noted, and corrective actions taken.

3.3 OFF-SITE HAZARDOUS WASTE MANAGEMENT

The Contractor shall use RCRA Subtitle C-permitted facilities which meet the requirements of 40 CFR 264 or facilities operating under interim status which meet the requirements of 40 CFR 265 for hazardous waste disposal. The Contractor shall use RCRA Subtitle D or recycling facilities for nonhazardous material being transported off site. Disposal or recycling facilities with significant RCRA violations or

compliance problems (such as facilities known to be releasing hazardous constituents into ground water, surface water, soil, or air) shall not be used.

3.3.1 Description of TSD Facility And Transporter

The Contractor shall provide the CO with EPA ID numbers, names, locations, and telephone numbers of all proposed disposal and recycling facilities and transporters. This information shall be contained in the Waste Management Plan for approval prior to waste disposal.

3.3.2 Status of The Facility

Facilities receiving hazardous waste must be permitted in accordance with 40 CFR 270 or operating under interim status in accordance with 40 CFR 265 requirements or must be permitted by an authorized state program. Additionally, prior to using a TSD Facility or other facility for off-site disposal, the Contractor shall contact the EPA Regional Off-Site Coordinator specified in 40 CFR 300, Section .440, to determine the facility's status and document all information necessary to satisfy the requirements of the EPA Off-Site Policy and furnish this information to the CO.

3.3.3 Packagings Certification

Prior to shipment of any material off site, the Contractor's TDC shall provide written certification to the CO that hazardous and nonhazardous materials have been properly packaged, labeled, and marked in accordance with Department of Transportation and EPA requirements.

3.3.4 Transportation

The Contractor shall use manifests for transporting hazardous wastes as required by 40 CFR 263 or any applicable state or local law or regulation. Transportation shall comply with all requirements in the Department of Transportation referenced regulations in the 49 CFR series. The Contractor shall acquire manifests in accordance with the hierarchy established in 40 CFR 262, Section .21. The Contractor shall prepare hazardous waste manifests for each shipment of hazardous waste shipped off site. Manifests shall be completed using instructions in 40 CFR 262, Subpart B and any applicable state or local law or regulation. Manifest packages and waste profiles shall be submitted to CO for review and approval. The Contractor shall prepare land disposal restriction notifications as required by 40 CFR 268 or any applicable state or local law or regulation for each shipment of hazardous waste. Notifications shall be submitted with the manifest to the CO for review and approval. The Corps of Engineers will be signing the waste profiles and hazardous waste manifests on behalf of EPA; the Contractor shall not sign the profiles or the manifests.

3.3.5 Treatment And Disposal Of Hazardous Wastes

The hazardous waste shall be transported to an approved hazardous waste treatment, storage, or disposal facility within 90 days of the accumulation start date on each container. The Contractor shall ship hazardous wastes only to facilities that are properly permitted to accept the hazardous waste or operating under interim status. The Contractor shall ensure wastes are treated to meet land disposal treatment standards in 40 CFR 268 prior to land disposal. The Contractor shall propose TSD facilities via submission of the Waste Management Plan, subject to the approval of the CO.

3.4 HAZARDOUS MATERIALS MANAGEMENT

The Contractor, in consultation with the CO, shall evaluate prior to shipment of any material off site whether the material is regulated as a hazardous waste in addition to being regulated as a hazardous material; this shall be done for the purpose of determining proper shipping descriptions, marking requirements, etcetera, as described below.

3.4.1 Identification Of Proper Shipping Names

The Contractor shall use 49 CFR 172, Section .101 to identify proper shipping names for each hazardous material (including hazardous wastes) to be shipped off site. Proper shipping names shall be submitted to the CO in the form of draft shipping documents for review and approval.

3.4.2 Packaging, Labeling, And Marking

The Contractor shall package, label, and mark hazardous materials/wastes using the specified materials and in accordance with the referenced authorizations. The Contractor shall mark each container of hazardous waste of 110 gallons or less with the following:

> HAZARDOUS WASTE - Federal Law Prohibits Improper Disposal.
>
> If found, contact the nearest police or public safety authority or the
> U.S. Environmental Protection Agency.
>
> Generator's name _____
>
> Manifest Document Number _____.

3.4.3 Shipping Documents

The Contractor shall ensure that each shipment of hazardous material sent off site is accompanied by properly completed shipping documents.

3.4.3.1 Other Hazardous and Nonhazardous Material Shipment Documents

The Contractor shall prepare a bill of lading for each shipment of hazardous and nonhazardous material that is not accompanied by a hazardous waste manifest which fulfills the shipping paper requirements. The bill of lading shall satisfy the requirements of 49 CFR 172, Subpart C, (and 40 CFR 279 if shipping used oil) and any applicable state or local law or regulation, and shall be submitted to the CO for review and approval. For laboratory samples, the Contractor shall prepare bills of lading and other documentation as necessary to satisfy conditions of the sample exclusions in 40 CFR 261, Section .4(d) and (e) and any applicable state or local law or regulation. Bills of lading requiring shipper's certifications shall be signed by the Contractor.

3.5 EPA ID NUMBER

The Contractor shall use the Facility EPA ID number WAD009248295.

3.6 WASTE MINIMIZATION

The Contractor shall minimize the generation of hazardous waste to the maximum extent practicable. The Contractor shall take all necessary precautions to avoid mixing clean and contaminated wastes. The Contractor shall identify and evaluate recycling and reclamation options as alternatives to land disposal. Requirements of 40 CFR 266 shall apply to: hazardous wastes recycled in a manner constituting disposal; hazardous waste burned for energy recovery; lead-acid battery recycling; and hazardous wastes, including separation of product from water, air, etc. with economically recoverable precious metals.

3.7 RECORDKEEPING

The Contractor shall be responsible for maintaining adequate records to support information provided to the CO regarding exception reports, annual reports, and biennial reports. The Contractor shall be responsible for maintaining asbestos waste shipment records for a minimum of 3 years from the date of shipment or any longer period required by any applicable law or regulation or any other provision of this contract.

3.8 SPILL RESPONSE

The Contractor shall respond to any spill of hazardous materials or hazardous waste, which are in the custody or care of the Contractor pursuant to this contract. Any direction from the CO concerning a spill or release shall not be considered a change under the contract. The Contractor shall comply with all applicable requirements of Federal, state, or local laws or regulations regarding any spill incident.

3.9 EMERGENCY CONTACTS

The Contractor shall be responsible for complying with the emergency contact provisions in 49 CFR 172.604. Whenever the Contractor ships hazardous materials, the Contractor shall provide a 24-hour emergency response contact and phone number of a person knowledgeable about the hazardous materials being shipped and who has comprehensive emergency response and incident mitigation information for that material, or has immediate access to a person who possesses such knowledge and information. The phone must be monitored on a 24-hour basis at all times when the hazardous materials are in transportation including during storage incidental to transportation. The Contractor shall ensure that information regarding this emergency contact and phone number is placed on all hazardous materials shipping documents. The Contractor shall designate an emergency coordinator and post the following information at areas in which hazardous wastes are managed:

a. The name of the emergency coordinator;

b. Phone number through which the emergency coordinator can be contacted on a 24-hour basis;

c. The telephone number of the local fire department; and

d. The location of fire extinguishers and spill control materials.

Attachment 02120-A

SAMPLE OFF-SITE POLICY CERTIFICATION MEMO

Project/Contract #:_____
Waste Stream:_____
Primary TSD Facility, EPA ID # and Location: _____
Alter. TSD Facility, EPA ID # and Location:_____

EPA Region X	Primary Contact	Secondary Contact
	(206) 553-6646	(206) 553-1061

EPA representative contacted: _____
EPA representative phone number: _____
Date contacted: _____

Comment: _____
The above EPA representative was contacted on _____. As of that date the above sites were considered acceptable in accordance with the Off-Site Policy in 40 CFR 300.440.

Signature: _____ Date: _____
Phone number: _____

END OF SECTION

TECHNICAL EXHIBIT

TE-1

GENERAL DESCRIPTION OF FACILITIES TO BE
OPERATED AND MAINTAINED

General

The purpose of this contract is to operate and maintain an existing groundwater treatment facility. The facility is described below. The purpose of the is project is to operate and maintain the existing pump and treat system such that treated effluent meets the EPA's effluent limitations and monitoring requirements, as described in the Soils and Groundwater Operable Units Record of Decision (EPA, 2000).

This technical exhibit to the contract package describes the facilities to be maintained, as well as responsibilities for operations and maintenance.

Description of the Groundwater Extraction and Treatment

The Wyckoff/Eagle Harbor Superfund Site Soils and Groundwater Operable Unit is contaminated with wood-treatment chemicals, including primarily polynuclear aromatic hydrocarbons (PAHs), pentachlorophenol (PCP), and dioxins/furans. A groundwater pump and treat system is currently employed. The pump and treat system consists of eight extraction wells and a groundwater treatment plant. Treated water (effluent) is discharged in the Puget Sound.

Groundwater and non-aqueous phase liquid (NAPL) are extracted from each well using two separate sets of pumps. Total fluids (groundwater with a minor component of NAPL) are recovered at a rate of approximately 5 to 15 gpm using a progressive cavity pump located at ground surface near each well head. NAPL is recovered from the extraction wells using portable air diaphragm pumps located at ground surface near the well heads. The recovered NAPL is placed in drums next to the well head and is later transferred via vacuum truck to the hydrocarbon tank, T-105, for storage until disposal off-site. NAPL is currently recovered as necessary by measuring the NAPL level. The contaminated groundwater is pumped via HDPE pipe to the treatment plant head. Flow in from the head of the treatment plant is piped to either the DEP-104 or tank T-401 Other liquids, including water from the rain/spill sump and decontamination pad are pumped to T-401. The liquids in T-401 will have approximately 8 hours of residence time, before being pumped via HDPE pipe from the side-bottom of the tank to an existing depurator, DEP-104, which functions to separate NAPL from the liquid stream.

The NAPL separated from the water in DEP-104 will be pumped via HDPE pipe to a froth tank (SEP-108). The NAPL in SEP-108 is pumped via HDPE pipe to the product storage tank (T-

105). The water in SEP-108 is pumped back via HDPE pipe to DEP-104. The water in DEP-104 is pumped to an equalization tank T-402 via HDPE pipe

The water in T-402 will have approximately 15 hours of residence time. The water in T-402 is pumped via PVC pipe to an aeration basin (T-203). The aeration basin includes microorganisms (in the form of activated sludge) that can consume organic contaminants like PCP. Periodically (currently biannually) activated sludge is wasted from the aeration basin. The wasted activated sludge (WAS) is de-watered using a plate filter press F-208. Water from the filter press is pumped via PVC pipe to T-402. Solids from the plate filter press are containerized and shipped off-site for disposal. Water from T-203 is pumped via PVC pipe to the clarifier (T-204). Solids in the clarifier are skimmed and recycled to the aeration basin.

Water from the clarifier is pumped to two multimedia filters in parallel (T-206A/T-206B) for collecting suspended solids via tank, T-205, which acts as a wet well for effluent pumps P-205A and P-205B. The filters will require periodic (currently daily) backwashing to remove solids from the filter media. Each filter is backwashed individually. Filter backwash water is pumped to a backwash holding tank T-207, where solids settle out. The filter water is pumped from T-207 to T-203 as a batch operation. Water from the multimedia filters is pumped via PVC pipe to a set of liquid-phase GAC units (T-300/T-301/T-302) for final treatment. The three GAC units each hold approximately 6,000 lbm of GAC. The GAC units are piped and valved such that they can be run in several configurations of lead-lag, with one, two, or all three units operating at the same time. Currently, the units are operated with two units in series (lead? lag) and the third unit on standby.

Water from the lag GAC unit is pumped via PVC pipe to the treated effluent tank T-303. This tank holds approximately 25,000 gallons of treated water. Water in this tank can be used for multimedia filter and GAC unit backwashing, as well as other water uses for the site where water can be hard. Treated water in T-303 that is not used on-site will be discharged via a ductile iron discharge pipe into Puget Sound.

(Attachment Follows-Table of General Responsibilities)

****

General Responsibilities-Facility Operations & Maintenance

Existing Feature or Work Item	Operations Responsibility	Maintenance Responsibility
7 extraction wells	Contractor	Contractor
Extraction pumps	Contractor	Contractor
Contaminant conveyance (piping)	Contractor	Contractor
Liquid treatment plant including discharge	Contractor	Contractor
Off-site waste disposal	Contractor	Contractor

This listing is provided for information only. Not all work may be included. Refer to specifications for detailed requirements.

This page intentionally blank.

TECHNICAL EXHIBIT
TE-2

GOVERNMENT FURNISHED PROPERTY, EQUIPMENT AND MATERIALS INVENTORY

ITEM	WYCKOFF USE	AVAILABILITY
1. Government Furnished Property	• Contractor Offices, etc. • Decontamination Trailer	Transfer rental to this contract (1/) Transfer rental to this contract (1/)
2. Government Furnished Equipment		(Estimate – Subject to Inventory)
• 3-inch diameter HDPE pipe welder in the Treatment Plant backup generator (75KW) shed	Pipe welding	1 each
3. Government Furnished Materials – One Time Issue		(Estimate – Subject to Inventory)
• Determine after award		
4. Government Furnished Supplies – One Time Issue		(Estimate – Subject to Inventory)
• Liquid-phase GAC	Liquid Treatment	Inventory
• Liquid Propane	Fuel for Treatment Plant backup generator (75 KW)	Inventory

Notes: This listing does not include any property/equipment to be Government furnished /Government installed (GF/GI) during this contract or Government operated systems. Refer to the specifications for description of such property/systems, if any.

1/ Refer to Section 01501 TEMPORARY FACILITIES AND CONTROLS

****

This page intentionally blank.

TECHNICAL EXHIBIT

TE-4

HISTORICAL MAINTENANCE AND OPERATIONS DATA

Wyckoff Project

MONTHLY EXTRACTION AND TREATMENT SYSTEM STATUS REPORT
January 2000 through January 2001

SECTION 1. EXTRACTION SYSTEM

January 2000

- Routine operations and maintenance.
- An increase in discharge pressure was evidenced on PW-1. To decrease the pressure, the intake and effluent piping were cleaned. This decreased the discharge pressure and improved performance. Cleanout access was installed to facilitate cleaning.
- In an effort to examine solids buildup and facilitate mainline cleaning, a 3-inch flange was installed into the mainline.
- Rebuilt RPW-1 with bearings, rotor and stator.
- Rebuilt RPW-5 with bearings, rotor and stator.
- Rebuilt drive end of RPW-9, including mechanical seal.

February 2000

- Routine operations and maintenance.
- The entire well field main pipeline was cleaned (wells down from 0800 2/23/00 till 1000 2/24/00) to reduce blockages, reduce pressure, and increase flow.
- As part of the main pipeline cleaning, all 1-inch valves and piping connecting well piping to the mainline were taken apart and cleaned.

March 2000

- Routine operations and maintenance.
- The rotor and stator on PP-5 were replaced.

TE-4 (con.)

SECTION 1. EXTRACTION SYSTEM

April 2000

- Routine operations and maintenance.
- The flow meter on RPW 3 was not working properly and therefore was removed and repaired.
- The mechanical seal bearings and O rings on product pump 3 were replaced to stop leakage.

May 2000

- Routine operations and maintenance.

June 2000

- Routine operations and maintenance.
- The flow meters on wells RPW 3 and RPW 8 were not working properly and were cleaned and repaired and returned to normal operation.

July 2000

- Routine operations and maintenance.
- The PW-8 flow meter was repaired and rebuilt.
- The PW-9 product storage tank was torn down and the seals replaced to stop leaks to the containment pad.
- Replaced PW-9 product piping to accommodate revised PW-9 storage tank.

TE-4 (con.)

SECTION 1. EXTRACTION SYSTEM

August 2000

- Routine operations and maintenance.
- The piping at PW 8 was modified to improve accessibility for maintenance purposes.
- Rebuilt valves and seals for failed piping at the product tank of PW#2.
- The well piping at PW#8 was cleaned because of plugging problems and reducing flow associated with solids accumulation.
- The flow meter at PW#3 was cleaned out to reestablish the correct flow rate reading.
- The flow meter at PW#4 was cleaned because of plugging problems with solids and reducing flows.
- The flow meter at PW#5 was cleaned because of plugging problems with solids and reducing flows.

September 2000

- Routine operations and maintenance.
- Cleaned the PW-1 piping and fixed the problem of reduced flow and increased pressure.
- Repaired PW-1 piping to provide future access to repair plugging
- Transferred product from the holding tank at PW-1 to T-105.
- Fixed several problems with the mainline pumping system and PW-1.
- Transferred product from the holding tank at PW-6 to T-105.

October 2000

- Routine operations and maintenance.
- The plant was shut down for work with a subcontractor to clean the main lines from the well field to plant pad and the pad piping up to the depurator. Mechanical flanges were installed at several locations to help speed the cleaning process for future pipe cleaning events. This pipeline cleaning event restored the pumping capacity of the production wells.

TE-4 (con.)

SECTION 1. EXTRACTION SYSTEM

November 2000

- Routine operations and maintenance.
- The PW-2 drive shaft/bearing alignment was adjusted to reduce the wear on the motor and increase efficiency.
- The PW-8 flowmeter was cleaned to remove debris blocking the meter.
- The PW-4 flowmeter was repaired.

December 2000

- Routine operations and maintenance.
- The PW-8 flowmeter was cleaned to remove debris blocking the meter.
- The PW-5 flowmeter was cleaned to remove debris blocking the meter.
- The PW-6 flowmeter was repaired and rebuilt.
- The contents of all well product tanks were transferred to pad storage tanks for waste haul out event.

January 2001

- The well field was secured from pumping in preparation for the plant downturn. This event is in conjunction with the sheet pile wall construction that will be going on next to the treatment facility. Pumping from the well field will only occur at short intervals to provide a needed food source for our microbes in the temporary tanks.

TE-4 (con.)

SECTION 2. PRIMARY SYSTEM

January 2000

- Routine operations and maintenance.
- DP-102 pump rebuilt

February 2000

- Routine operations and maintenance.
- All main pipelines in the primary system were cleaned.
- The Dep-104 discharge actuator valve was cleaned to accommodate increased flow rates.

March 2000

- Routine operations and maintenance.
- The contents of SEP-108 were pumped to T-105.

April 2000

- Routine operations and maintenance.
- DEP-104 pump inspected for wear and to determine required replacement parts

May 2000

- Routine operations and maintenance
- Cleanout out depurator to remove solids and inspect vessel

June 2000

- Routine operations and maintenance
- Repaired the north skimmer in the clarifier to help reduce the load on the multi media filters.
- The depurator skimmer drive failed and necessary parts were replaced.

TE-4 (con.)

SECTION 2. PRIMARY SYSTEM

July 2000

- Routine operations and maintenance
- The paddle assembly for the depurator skimmer was repaired.
- New screens were fabricated to replace the old and failing screens that keep silts and debris out of the treatment pad sump that may clog up the sump pumps.

August 2000

- Routine operations and maintenance
- Cleaned out the inside of the depurator and repaired level control system.
- Rebuilt P-401due to excessive corrosion and general pump wear.

September 2000

- Routine operations and maintenance
- Depurator level control system was rebuilt due to excessive corrosion and wear. The pump cut switch was also replaced on the actuator..

October 2000

- Routine operations and maintenance.

November 2000

- Routine operations and maintenance.
- New pressure gauges were installed on the discharge of P-205A/B and P-104B.

TE-4 (con.)

SECTION 2. PRIMARY SYSTEM

December 2000

- Routine operations and maintenance.
- The depurator was drained for cleaning, and the replacement of bolt connections on the skimmer paddles to reposition them.
- Tank 108 was drained and cleaned in preparation for the waste haul-out event.
- The worn drive belts were replaced on the number one aeration drive motor.
- The isolation valve on T 107 was replaced due to valve failure.

January 2001

- Tanks 401 and 402 were drained and the water processed in anticipation of the sheet pile wall construction adjacent to the treatment plant.
- To continue operations without the use of tanks 401 and 402, temporary piping was installed allowing those tanks and the aeration basin to be bypassed and still process ground water in the large baker tanks holding the aeration basin solids materials.
- The depurator was emptied and cleaned to reduce the possibility of pentachlorophenol surges into the baker tanks.
- Repairs were made to DP 104 froth pump (motor replacement and oil change) because of a burnt out motor.
- The DP 104 discharge check valve was repaired.
- The existing south side scum trough discharge elbow was rusted through, so temporary repairs were made until replacement parts arrived.

TE-4 (con.)

SECTION 3. SECONDARY SYSTEM

January 2000

- Routine operations and maintenance.
- Conducted the monthly maintenance on the polymer system
- Excessive foam was removed from clarifier.

February 2000

- Routine operations and maintenance.
- Conducted the monthly maintenance on the polymer system

March 2000

- Routine operations and maintenance.
- Solids from the T-205 biofilter to Aerobic digester for final digestion prior to solids pressing.
- Pressed 14 drums of digester cake from the aerobic digester.
- The polyblend suction hose was replaced.
- Solids from multi media filter backwash storage tank were pumped to the Aerobic digester.
- Conducted the monthly maintenance on the polymer system
- P-401A was inspected for parts failure.

April 2000

- Routine operations and maintenance.
- Conducted the monthly maintenance on the polymer system
- Pressed digester cake from the aerobic digester.
- Pump 401A was rebuilt

TE-4 (con.)

SECTION 3. SECONDARY SYSTEM

May 2000

- Routine operations and maintenance.
- The polymer system was disassembled to clean and replace tubing and fittings that contained deposits.

June 2000

- Routine operations and maintenance.
- Cleaned out the biofilter and installed baffles to prevent surface scum from clogging the pipes and/or pumps from the biofilter system.
- The solenoid, dispersion check valve, and pressure switch were replaced on the Polyblend unit.
- A new polymer diffuser was fabricated and installed to provide better polymer application.
- A new draw down tube on the polymer system was installed to more accurately measure the rate of polymer use.
- The carrier water system on the polyblend unit was re-piped to improve the efficiency of the polymer system.

July 2000

- Routine operations and maintenance.
- The air supply for the multi media filter backwash system was re-piped to provide a more secure and permanent air supply.
- The Polymer feed line was purged and flushed to remove clogging debris, and a flush port was installed allowing the line to be purged with water.
- To counteract problems with the polymer diffusion system, the diffuser will be cleaned and rotated weekly.
- The lower unit on flow control valve 205, biofilter level control unit, froze and was replaced.

TE-4 (con.)

SECTION 3. SECONDARY SYSTEM

August 2000

- Routine operations and maintenance.
- Conducted the monthly maintenance on the polymer system
- The biofilter was cleaned.

September 2000

- Routine operations and maintenance.
- The polymer delivery system was cleaned and flushed to remove blockages.
- The backwash tank was cleaned and flushed to remove solids and debris.

October 2000

- Routine operations and maintenance.
- The polymer delivery system was cleaned and flushed to remove blockages.
- Replaced the GFI outlet on the polyblend system.
- The digester was allowed to decant and water was pumped from the tank.
- Solids were wasted from the aeration basin to the digester.

November 2000

- Routine operations and maintenance.
- A new polymer, Novus CE 2666, was used in the effort to improve the settling in the clarifier and reduce the loading of the multi media filters.
- Cleaned Biofilter.
- A new water and air manifold for south side of the multimedia filter was manufactured and installed.

TE-4 (con.)

SECTION 3. SECONDARY SYSTEM

December 2000

- Routine operations and maintenance.
- Equalization tank 402 was drained to the sump and reprocessed in preparation for the sheet pile wall construction adjacent to the treatment plant.
- Replaced suction line, motor, bearings, belts, and pulley on the Polyblend as well as a complete cleaning of the polymer system
- A new polymer diffuser was fabricated and installed.
- Drained and cleaned Biofilter.
- Decanted digester in preparation for pressing solids cake.
- Completed rebuilding the filter press with new cloths, gaskets and two new frames.
- Nine drums of digester solids were pressed in preparation for the waste haul out event.

January 2001

- Two twenty thousand-gallon baker tanks were brought on site and fitted with air diffuser systems. These tanks were then connected into our current blower system, and the well water feed bypass system to fill with water from the field pumps.
- A trash pump was installed for decanting the supurnate from the baker tanks to the biofilter.
- The aeration basin and clarifier were pumped down and the solids transferred to the temporary Baker tanks
- Digester modifications were made , included the replacement of aeration piping, aerators, and decanting piping.
- The remaining solids in aeration basin were vacuumed out and stored on site for future digestion.

TE-4 (con.)

SECTION 4. TERTIARY SYSTEM

January 2000

- Routine operations and maintenance.
- Fabricated container for safer handling of the sample carboy from the 24 hour composite sampler.

February 2000

- Routine operations and maintenance.
- The service piping from the propane tanks to the Generator Room was replaced due to pinhole leaks in the system.

March 2000

- Routine operations and maintenance.
- The lead carbon vessel was backwashed.
- Carbon vessel T-303 was placed in the lag position as the lead carbon is beginning to show signs of breakthrough

April 2000

- Routine operations and maintenance.
- The lead carbon vessel continued to show a slight breakthrough (removal efficiency 95 %)

May 2000

- Routine operations and maintenance.

TE-4 (con.)

SECTION 4. TERTIARY SYSTEM

June 2000

- Routine operations and maintenance.
- The filter media of the multi media filters was removed and replaced. The removed media was stored on site for waste haulout. Repairs made to multimedia filters.
- The carbon vessel T-302 was drained and cleaned in preparation for new carbon media. Corrosion pitting and hardware replaced within T-302.

July 2000

- Routine operations and maintenance.
- A Carbon change out and vessel repairs were completed on tank 302.
- A Burglary occurred on site. A fence was cut and tanks were painted with graffiti. Police and other appropriate parties were notified.

August 2000

- Routine operations and maintenance.
- Temporary repairs to the perimeter fence were made, and the graffiti was painted over.
- Preservation work was conducted on tankage and other equipment throughout the plant.
- A new polymer was undergoing trials in plant, Polyfloc 2666. The polymer system was cleaned and flushed prior to using the new polymer.

September 2000

- Routine operations and maintenance.
- The lead carbon vessel was backwashed to increase the removal efficiency and reduce the pressure drop through the filter. Repaired the lab water system.
- Plant personnel supported a contractor inspecting and troubleshooting a generator over speed trip problem.

TE-4 (con.)

SECTION 4. TERTIARY SYSTEM

September 2000 (Con.)

- In preparation for the installation of new filter cloths, the filter frames were removed from the press and the old cloths were removed.
- The installation of new cloths and gaskets was started.
- The broken lab faucet was replaced.
- As time permitted, staff worked on painting and preservation of valves and other equipment throughout site.
- Worn and rusted grating was replaced on the aeration basin.

October 2000

- Routine operations and maintenance.
- The carbon vessel sequence was changed to meet treatment requirements.
- The electrical outbuilding was cleaned out. Mice had built a large nest in the electrical panel feeding all the trailers. Specific health and safety protocols were followed in dealing with Haunta Virus potential.
- Continued installing new cloths and gaskets for the Plate and Frame Filter Press, two new replacement frames were also included.

November 2000

- Routine operations and maintenance.
- Carbon was transferred from T-300 to the spent carbon holding tank.
- Carbon vessel T-300 was inspected and prepared for the addition of new carbon.
- Repairs made to T-300 to repair corrosion pitting and hardware replacement.
- New carbon was loaded and backwashed in Vessel T300
- Carbon vessel T-302 was backwashed to relieve pressure drop over the filter.
- Sump solids from the treatment pad sump were collected and drummed up for disposal(five additional drums).
- The work on the plate and frame press continued as time permitted.

TE-4 (con.)

SECTION 4. TERTIARY SYSTEM

December 2000

- Routine operations and maintenance.
- Carbon vessel T 301 was put on line.
- Spent Carbon was pumped from T 302 to the temporary 6500 gallon baker tanks on site.
- Drain manifolds were manufactured and installed for the temporary baker tanks to decant the wet carbon.
- The T 302 carbon vessel was inspected and cleaned.
- The sample line for the twenty-four hour composite sampler was recovered with insulation.
- New lights were installed on the treatment pad and completed the new lighting changes required for night operations.
- Implemented the freeze protection plan in the polymer shack to prevent the polymer from freezing.

January 2001

- Tank 303 was drained and piping installed to completely reroute around 303 during construction of the Sheep Pile Wall around the treatment pad.
- Temporary backwash tanks were installed and piping modifications completed for the Sheet Pile Wall construction near the treatment pad.

This page intentionally blank.

SECTION J

LIST OF ATTACHMENTS

TABLE OF CONTENTS

ATTACHMENT	TITLE
J1	CONTRACT DATA REQUIREMENTS LIST – DD FORM 1423
J2	INSTRUCTIONS FOR COMPLETING DD FORM 1423
J3	DRAWING INDEX
J4	TECHNICAL SPECIFICATIONS (REFERENCED FROM SECTION C)
J5	MAINTENANCE AND OPERATION DATA - EXISTING TREATMENT PLANT
J6	RECORD OF DECISION

This page intentionally blank

CONTRACT DATA REQUIREMENTS LIST

FORM APPROVED
OMB No. 0704-0188

Public reporting burden for this collection of information is estimated to average 440 hours per response including the time for reviewing instructions, searching existing data sources, gathering and maintaining the data needed, and completing and reviewing the collection of information. Send comments regarding this burden estimate or any other aspects of this collecti or any aspects of of information including suggestions for reducing this burden to Department of Defense, Washington Headquarters Services, Directorate for Information Operations and R 1215 Jefferson Davis Highway, Suite 1204, Arlington VA 22202-4302, and to the Office of Management and Budget, Paperwork Reduction Project (0704-0188), Washington DC 20503. Please DO NOT RETURN your form to either of these addresses. Send completed form to the Government issuing Contracting Officer for the Contract/PR No. listed in Block E.

A. Contract Line Item No.	B. Exhibit	C. Category:	Contract Data
	B	TPD _____	TM _____ OTHER _____

D. System/Item	E. Contract/PR No.	F: Contractor

1. Data Item No.	2. Title of Data Item	3. Subtitle
A001	Transition Plan	

4. Authority (Data Acquisition Document No.)	5. Contract Reference	6. Requiring Office
	SECTION 01120, para 1.1.1	A1

7. DD 250 REQ.	9. Dist. Statement Required	10. Frequency	12. Date of First Submission	14. Distribution			
		OTIME	5 DAC		b. Copies		
8. APP Code		11. As of Date	13. Date of Subsequent Submission	a. Addressee	Draft	Final Reg	Final Repro
GA		Award					

16. Remarks	a. Addressee	Draft	Final Reg	Final Repro
Assumption plans for existing treatment plant	A1		5	0
	15. Total --------->		5	0

1. Data Item No.	2. Title of Data Item	3. Subtitle
A002A	Work Schedules	

4. Authority (Data Acquisition Document No.)	5. Contract Reference	6. Requiring Office
	SECTION 01145, para 1.5.1	A1

7. DD 250 REQ.	9. Dist. Statement Required	10. Frequency	12. Date of First Submission	14 Distribution			
			5 DAC		b. Copies		
8. APP Code		11. As of Date	13. Date of Subsequent Submission	a. Addressee	Draft	Final Reg	Final Repro
GA		Award	ASREQ				

16. REMARKS	a. Addressee	Draft	Final Reg	Final Repro
	A1		5	0
	15. Total --------->		5	0

1. Data Item No.	2. Title of Data Item	3. Subtitle
A002B	Phased Staffing Plan	

4. Authority (Data Acquisition Document No.)	5. Contract Reference	6. Requiring Office
	SECTION 01145, para 1.5.2	A1

7. DD 250 REQ.	9. Dist. Statement Required	10. Frequency	12. Date of First Submission	14. Distribution			
			30 DAC		b. Copies		
8. APP Code		11. As of Date	13. Date of Subsequent Submission	a. Addressee	Draft	Final Reg	Final Repro
GA		Award	R/ASR				

16. Remarks	a. Addressee	Draft	Final Reg	Final Repro
	A1		5	0
	15. Total --------->		5	0

1. Data Item No.	2. Title of Data Item	3. Subtitle

4. Authority (Data Acquisition Document No.)	5. Contract Reference	6. Requiring Office

7. DD 250 REQ.	9. Dist. Statement Required	10. Frequency	12. Date of First Submission	14. Distribution			
					b. Copies		
8. APP Code		11. As of Date	13. Date of Subsequent Submission	a. Addressee	Draft	Final Reg	Final Repro

16. Remarks	a. Addressee	Draft	Final Reg	Final Repro
				0
	15. Total --------->			0

G. Prepared By	H. Date	I. Approve By	J. Date

CONTRACT DATA REQUIREMENTS LIST

FORM APPROVED
OMB No. 0704-0188

Public reporting burden for this collection of information is estimated to average 440 hours per response including the time for reviewing instructions, searching existing data sources, gathering and maintaining the data needed, and completing and reviewing the collection of information. Send comments regarding this burden estimate or any other aspects of this collecti or any aspects of of information including suggestions for reducing this burden to Department of Defense, Washington Headquarters Services, Directorate for Information Operations and R 1215 Jefferson Davis Highway, Suite 1204, Arlington VA 22202-4302, and to the Office of Management and Budget, Paperwork Reduction Project (0704-0188), Washington DC 20503. Please DO NOT RETURN your form to either of these addresses. Send completed form to the Government issuing Contracting Officer for the Contract/PR No. listed in Block E.

A. Contract Line Item No.	B. Exhibit	C. Category:	Contract Data
	B	TPD _____	TM _____ OTHER _____

D. System/Item	E. Contract/PR No.	F: Contractor

1. Data Item No.	2. Title of Data Item	3. Subtitle
A003A	Cost and Performance Report	

4. Authority (Data Acquisition Document No.)	5. Contract Reference	6. Requiring Office
	SECTION 01240, para. 1.3	A1

7. DD 250 REQ.	9. Dist. Statement Required	10. Frequency	12. Date of First Submission	14. Distribution	b. Copies	
			See Block 16			
8. APP Code		11. As of Date	13. Date of Subsequent	a. Addressee	Draft	Final Reg / Repro
GA			See Block 16			

16. Remarks	a. Addressee	Draft	Final Reg	Final Repro
Outline - ASREQ	A1		5	0
Draft - NLT 30 CD after completion				
of O&M contract period				
Final - ASREQ	15. Total --------->		5	0

1. Data Item No.	2. Title of Data Item	3. Subtitle
A003B	Report Format	

4. Authority (Data Acquisition Document No.)	5. Contract Reference	6. Requiring Office
	SECTION 01240, para 1.3	A1

7. DD 250 REQ.	9. Dist. Statement Required	10. Frequency	12. Date of First Submission	14. Distribution	b. Copies	
			90 DAC			
8. APP Code		11. As of Date	13. Date of Subsequent Submission	a. Addressee	Draft	Final Reg / Repro
GA						

16. Remarks	a. Addressee	Draft	Final Reg	Final Repro
Provide in ASCII format	A1			1
	15. Total --------->			

1. Data Item No.	2. Title of Data Item	3. Subtitle

4. Authority (Data Acquisition Document No.)	5. Contract Reference	6. Requiring Office

7. DD 250 REQ.	9. Dist. Statement Required	10. Frequency	12. Date of First Submission	14. Distribution	b. Copies	
		W				
8. APP Code		11. As of Date	13. Date of Subsequent Submission	a. Addressee	Draft	Final Reg / Repro

16. Remarks	a. Addressee	Draft	Final Reg	Final Repro
	15. Total --------->			0

1. Data Item No.	2. Title of Data Item	3. Subtitle

4. Authority (Data Acquisition Document No.)	5. Contract Reference	6. Requiring Office

7. DD 250 REQ.	9. Dist. Statement Required	10. Frequency	12. Date of First Submission	14. Distribution	b. Copies	
8. APP Code		11. As of Date	13. Date of Subsequent Submission	a. Addressee	Draft	Final Reg / Repro
A						

16. Remarks	a. Addressee	Draft	Final Reg	Final Repro
				0
	15. Total --------->			0

G. Prepared By	H. Date	I. Approve By	J. Date

CONTRACT DATA REQUIREMENTS LIST

FORM APPROVED
OMB No. 0704-0188

Public reporting burden for this collection of information is estimated to average 440 hours per response including the time for reviewing instructions, searching existing data sources, gathering and maintaining the data needed, and completing and reviewing the collection of information. Send comments regarding this burden estimate or any other aspects of this collecti or any aspects of of information including suggestions for reducing this burden to Department of Defense, Washington Headquarters Services, Directorate for Information Operations and R 1215 Jefferson Davis Highway, Suite 1204, Arlington VA 22202-4302, and to the Office of Management and Budget, Paperwork Reduction Project (0704-0188), Washington DC 20503. Please DO NOT RETURN your form to either of these addresses. Send completed form to the Government issuing Contracting Officer for the Contract/PR No. listed in Block E.

A. Contract Line Item No.	B. Exhibit	C. Category:	Contract Data
	B	TPD _____	TM _____ OTHER _____

D. System/Item	E. Contract/PR No.	F: Contractor

1. Data Item No.	2. Title of Data Item	3. Subtitle
A004A	Work Zones and Decontamination Facilities	Drawings

4. Authority (Data Acquisition Document No.)	5. Contract Reference	6. Requiring Office
	SECTION 01351, para 1.3.1	A1

7. DD 250 REQ.	9. Dist. Statement Required	10. Frequency	12. Date of First Submission	14. Distribution
			(a)	
8. APP Code		11. As of Date	13. Date of Subsequent Submission	a. Addressee
GA		Award	R/ASR	

16. Remarks	a. Addressee	b. Copies Draft	Final Reg	Final Repro
(a) Submit as part of the MP	A1		5	0
	15. Total --------->		5	0

1. Data Item No.	2. Title of Data Item	3. Subtitle
A004B	SSHP (Amendment)	

4. Authority (Data Acquisition Document No.)	5. Contract Reference	6. Requiring Office
	SECTION 01351, para 1.3.2	A1

7. DD 250 REQ.	9. Dist. Statement Required	10. Frequency	12. Date of First Submission	14. Distribution
			(a) 7 DAC	
8. APP Code		11. As of Date	13. Date of Subsequent Submission	a. Addressee
GA		Award	90 DAC	

16. Remarks	a. Addressee	b. Copies Draft	Final Reg	Final Repro
(a) Lettter of Acceptance of Existing SSHP	A1		5	0
	15. Total --------->		5	0

1. Data Item No.	2. Title of Data Item	3. Subtitle
A004C	Monitoring/Sampling Results	

4. Authority (Data Acquisition Document No.)	5. Contract Reference	6. Requiring Office
	SECTION 01351, para 1.3.2	A1

7. DD 250 REQ.	9. Dist. Statement Required	10. Frequency	12. Date of First Submission	14 Distribution
			ASREQ	
8. APP Code		11. As of Date	13. Date of Subsequent Submission	a. Addressee
FIO			Weekly	

16. REMARKS	a. Addressee	b. Copies Draft	Final Reg	Final Repro
	A1		5	0
	15. Total --------->		5	0

1. Data Item No.	2. Title of Data Item	3. Subtitle
A004D	Site Control Log	

4. Authority (Data Acquisition Document No.)	5. Contract Reference	6. Requiring Office
	SECTION 01351, para 1.3.2	A1

7. DD 250 REQ.	9. Dist. Statement Required	10. Frequency	12. Date of First Submission	14. Distribution
		w	See Block 16	
8. APP Code		11. As of Date	13. Date of Subsequent Submission	a. Addressee
FIO			ASREQ	

16. Remarks	a. Addressee	b. Copies Draft	Final Reg	Final Repro
Beginning of 2nd week of on-site work	A1		1	
	15. Total --------->			

G. Prepared By	H. Date	I. Approve By	J. Date

CONTRACT DATA REQUIREMENTS LIST

FORM APPROVED
OMB No. 0704-0188

Public reporting burden for this collection of information is estimated to average 440 hours per response including the time for reviewing instructions, searching existing data sources, gathering and maintaining the data needed, and completing and reviewing the collection of information. Send comments regarding this burden estimate or any other aspects of this collecti or any aspects of of information including suggestions for reducing this burden to Department of Defense, Washington Headquarters Services, Directorate for Information Operations and R 1215 Jefferson Davis Highway, Suite 1204, Arlington VA 22202-4302, and to the Office of Management and Budget, Paperwork Reduction Project (0704-0188), Washington DC 20503. Please DO NOT RETURN your form to either of these addresses. Send completed form to the Government issuing Contracting Officer for the Contract/PR No. listed in Block E.

A. Contract Line Item No.	B. Exhibit	C. Category:	Contract Data
	B	TPD _____	TM _____ OTHER _____

D. System/Item	E. Contract/PR No.	F: Contractor

1. Data Item No.	2. Title of Data Item	3. Subtitle
A004E	Safety and Health Phase-out Report	

4. Authority (Data Acquisition Document No.)	5. Contract Reference	6. Requiring Office
	SECTION 01351, para 1.3.2	A1

7. DD 250 REQ.	9. Dist. Statement Required	10. Frequency	12. Date of First Submission	14. Distribution
			See block 16	
8. APP Code		11. As of Date	13. Date of Subsequent Submission	
GA		Closeout		

16. Remarks
14 CD after completion of work and prior to final acceptance

a. Addressee	b. Copies: Draft	Final: Reg	Final: Repro
A1		5	0
15. Total --------->		5	0

1. Data Item No.	2. Title of Data Item	3. Subtitle
A005A	Management Plan (Amendment)	

4. Authority (Data Acquisition Document No.)	5. Contract Reference	6. Requiring Office
	SECTION 01401, para 1.3	A1

7. DD 250 REQ.	9. Dist. Statement Required	10. Frequency	12. Date of First Submission	14. Distribution
			10 DAC	
8. APP Code		11. As of Date	13. Date of Subsequent Submission	
GA		Award		

16. Remarks

a. Addressee	b. Copies: Draft	Final: Reg	Final: Repro
A1		5	1
15. Total --------->		5	1

1. Data Item No.	2. Title of Data Item	3. Subtitle
A005B	Field Notes	

4. Authority (Data Acquisition Document No.)	5. Contract Reference	6. Requiring Office
	SECTION 01401, para 1.5.1	A1

7. DD 250 REQ.	9. Dist. Statement Required	10. Frequency	12. Date of First Submission	14 Distribution
			(a)	
8. APP Code		11. As of Date	13. Date of Subsequent Submission	
FIO		Award	ASREQ	

16. REMARKS
(a) Attach to daily CQCR

a. Addressee	b. Copies: Draft	Final: Reg	Final: Repro
A1		1	0
15. Total --------->		1	0

1. Data Item No.	2. Title of Data Item	3. Subtitle
A005C	Interim Reports	

4. Authority (Data Acquisition Document No.)	5. Contract Reference	6. Requiring Office
	SECTION 01401, para 1.5.2	A1

7. DD 250 REQ.	9. Dist. Statement Required	10. Frequency	12. Date of First Submission	14. Distribution
		ASREQ	ASREQ	
8. APP Code		11. As of Date	13. Date of Subsequent Submission	
FIO		Award	ASREQ	

16. Remarks

a. Addressee	b. Copies: Draft	Final: Reg	Final: Repro
A1		5	0
15. Total --------->		5	0

G. Prepared By	H. Date	I. Approve By	J. Date

CONTRACT DATA REQUIREMENTS LIST

FORM APPROVED
OMB No. 0704-0188

Public reporting burden for this collection of information is estimated to average 440 hours per response including the time for reviewing instructions, searching existing data sources, gathering and maintaining the data needed, and completing and reviewing the collection of information. Send comments regarding this burden estimate or any other aspects of this collecti or any aspects of of information including suggestions for reducing this burden to Department of Defense, Washington Headquarters Services, Directorate for Information Operations and R 1215 Jefferson Davis Highway, Suite 1204, Arlington VA 22202-4302, and to the Office of Management and Budget, Paperwork Reduction Project (0704-0188), Washington DC 20503. Please DO NOT RETURN your form to either of these addresses. Send completed form to the Government issuing Contracting Officer for the Contract/PR No. listed in Block E.

A. Contract Line Item No.	B. Exhibit	C. Category:	Contract Data
	B	TPD _____	TM _____ OTHER _____

D. System/Item	E. Contract/PR No.	F: Contractor

1. Data Item No.	2. Title of Data Item	3. Subtitle
A005D	Final Report	

4. Authority (Data Acquisition Document No.)	5. Contract Reference	6. Requiring Office
	SECTION 01401, para 1.5.3	A1

7. DD 250 REQ.	9. Dist. Statement Required	10. Frequency	12. Date of First Submission	14. Distribution			
			See Block 16		b. Copies		
8. APP Code		11. As of Date	13. Date of Subsequent Submission	a. Addressee	Draft	Final	
GA						Reg	Repro
				A1		5	0
				15. Total --------->		5	0

16. Remarks
Within 30 days after completion of contract period.

1. Data Item No.	2. Title of Data Item	3. Subtitle
A006	Environmental Protection Plan (Amendment)	

4. Authority (Data Acquisition Document No.)	5. Contract Reference	6. Requiring Office
	SECTION 01410, para 1.1.2	A1

7. DD 250 REQ.	9. Dist. Statement Required	10. Frequency	12. Date of First Submission	14. Distribution			
			See Block 16		b. Copies		
8. APP Code		11. As of Date	13. Date of Subsequent Submission	a. Addressee	Draft	Final	
GA		Award				Reg	Repro
				A1			0
				15. Total --------->			0

16. Remarks
Submit as part of the Management Plan

1. Data Item No.	2. Title of Data Item	3. Subtitle
A007A	Staffing Plan	

4. Authority (Data Acquisition Document No.)	5. Contract Reference	6. Requiring Office
	SECTION 01430, para. 1.3	A1

7. DD 250 REQ.	9. Dist. Statement Required	10. Frequency	12. Date of First Submission	14 Distribution			
			7 DAC		b. Copies		
8. APP Code		11. As of Date	13. Date of Subsequent Submission	a. Addressee	Draft	Final	
GA		Award	R/ASR			Reg	Repro
				A1		5	0
				15. Total --------->		5	0

16. REMARKS

1. Data Item No.	2. Title of Data Item	3. Subtitle
A007B	Organization Charts	SD-09 Reports

4. Authority (Data Acquisition Document No.)	5. Contract Reference	6. Requiring Office
	SECTION 01430, para. 1.3	A1

7. DD 250 REQ.	9. Dist. Statement Required	10. Frequency	12. Date of First Submission	14. Distribution			
			7 DAC		b. Copies		
8. APP Code		11. As of Date	13. Date of Subsequent Submission	a. Addressee	Draft	Final	
GA		Award	R/ASR			Reg	Repro
				A1		5	0
				15. Total --------->		5	0

16. Remarks

G. Prepared By	H. Date	I. Approve By	J. Date

CONTRACT DATA REQUIREMENTS LIST

FORM APPROVED
OMB No. 0704-0188

Public reporting burden for this collection of information is estimated to average 440 hours per response including the time for reviewing instructions, searching existing data sources, gathering and maintaining the data needed, and completing and reviewing the collection of information. Send comments regarding this burden estimate or any other aspects of this collecti or any aspects of of information including suggestions for reducing this burden to Department of Defense, Washington Headquarters Services, Directorate for Information Operations and R 1215 Jefferson Davis Highway, Suite 1204, Arlington VA 22202-4302, and to the Office of Management and Budget, Paperwork Reduction Project (0704-0188), Washington DC 20503. Please DO NOT RETURN your form to either of these addresses. Send completed form to the Government issuing Contracting Officer for the Contract/PR No. listed in Block E.

A. Contract Line Item No.	B. Exhibit	C. Category:	
	B	TPD _____	Contract Data TM _____ OTHER _____

D. System/Item	E. Contract/PR No.	F: Contractor

1. Data Item No.	2. Title of Data Item	3. Subtitle
B001A	Sampling and Analysis Plan (Amendment)	

4. Authority (Data Acquisition Document No.)	5. Contract Reference	6. Requiring Office
	SECTION 01450, para. 1.6	A1

7. DD 250 REQ.	9. Dist. Statement Required	10. Frequency	12. Date of First Submission
			See Block 16
8. APP Code		**11. As of Date**	**13. Date of Subsequent Submission**
GA		Award	90 CD

14. Distribution			
a. Addressee	b. Copies		
	Draft	Final	
		Reg	Repro
A1		5	0
15. Total --------->		5	0

16. Remarks
Submit as part of the Management Plan

1. Data Item No.	2. Title of Data Item	3. Subtitle
B001B	Chemistry Data Package	

4. Authority (Data Acquisition Document No.)	5. Contract Reference	6. Requiring Office
	SECTION 01450, para. 1.6	A1

7. DD 250 REQ.	9. Dist. Statement Required	10. Frequency	12. Date of First Submission
		W	ASREQ
8. APP Code		**11. As of Date**	**13. Date of Subsequent Submission**
GA		Award	ASREQ

14. Distribution			
a. Addressee	b. Copies		
	Draft	Final	
		Reg	Repro
A1		5	0
15. Total --------->		5	0

16. Remarks

1. Data Item No.	2. Title of Data Item	3. Subtitle
B001C	Biological Compliance Monitoring	

4. Authority (Data Acquisition Document No.)	5. Contract Reference	6. Requiring Office
	SECTION 01450, para. 1.6	A1

7. DD 250 REQ.	9. Dist. Statement Required	10. Frequency	12. Date of First Submission
			(a)
8. APP Code		**11. As of Date**	**13. Date of Subsequent Submission**
GA		Award	(b)

14 Distribution			
a. Addressee	b. Copies		
	Draft	Final	
		Reg	Repro
A1		5	
15. Total --------->		5	

16. REMARKS
(a) Quarterly biological sampling event
(b) 30 CD after event of block 11

1. Data Item No.	2. Title of Data Item	3. Subtitle
B001D	Chemical Data Final Report	

4. Authority (Data Acquisition Document No.)	5. Contract Reference	6. Requiring Office
	SECTION 01450, para. 1.6	A1

7. DD 250 REQ.	9. Dist. Statement Required	10. Frequency	12. Date of First Submission
		O/Time	(a)
8. APP Code		**11. As of Date**	**13. Date of Subsequent Submission**
GA		Closeout	

14. Distribution			
a. Addressee	b. Copies		
	Draft	Final	
		Reg	Repro
A1		5	0
15. Total --------->		5	0

16. Remarks
(a) Within 30 calendar days of completion of contract period

G. Prepared By	H. Date	I. Approve By	J. Date

CONTRACT DATA REQUIREMENTS LIST

FORM APPROVED
OMB No. 0704-0188

Public reporting burden for this collection of information is estimated to average 440 hours per response including the time for reviewing instructions, searching existing data sources, gathering and maintaining the data needed, and completing and reviewing the collection of information. Send comments regarding this burden estimate or any other aspects of this collecti or any aspects of of information including suggestions for reducing this burden to Department of Defense, Washington Headquarters Services, Directorate for Information Operations and R 1215 Jefferson Davis Highway, Suite 1204, Arlington VA 22202-4302, and to the Office of Management and Budget, Paperwork Reduction Project (0704-0188), Washington DC 20503. Please DO NOT RETURN your form to either of these addresses. Send completed form to the Government issuing Contracting Officer for the Contract/PR No. listed in Block E.

A. Contract Line Item No.	B. Exhibit	C. Category:	Contract Data
	B	TPD _____	TM _____ OTHER _____

D. System/Item	E. Contract/PR No.	F: Contractor

1. Data Item No.	2. Title of Data Item	3. Subtitle
B003A	Interim Quality Control Plan-Services	

4. Authority (Data Acquisition Document No.)	5. Contract Reference	6. Requiring Office
	SECTION 01451B, para 1.3	A1

7. DD 250 REQ.	9. Dist. Statement Required	10. Frequency	12. Date of First Submission	14. Distribution			
			10 DAC	a. Addressee	b. Copies		
8. APP Code		11. As of Date	13. Date of Subsequent Submission		Draft	Final	
GA		Award				Reg	Repro
16. REMARKS				A1		5	0
				15. Total --------->		5	0

1. Data Item No.	2. Title of Data Item	3. Subtitle
B003B	Quality Control Plan-Services	

4. Authority (Data Acquisition Document No.)	5. Contract Reference	6. Requiring Office
	SECTION 01451B, para 1.3	A1

7. DD 250 REQ.	9. Dist. Statement Required	10. Frequency	12. Date of First Submission	14. Distribution			
			(a)	a. Addressee	b. Copies		
8. APP Code		11. As of Date	13. Date of Subsequent Submission R/ASR		Draft	Final	
GA		Award				Reg	Repro
16. Remarks				A1		5	0
(a) NLT 30 CD after start of on-site work							
				15. Total --------->		5	0

1. Data Item No.	2. Title of Data Item	3. Subtitle

4. Authority (Data Acquisition Document No.)	5. Contract Reference	6. Requiring Office

7. DD 250 REQ.	9. Dist. Statement Required	10. Frequency	12. Date of First Submission	14. Distribution			
				a. Addressee	b. Copies		
8. APP Code		11. As of Date	13. Date of Subsequent Submission		Draft	Final	
						Reg	Repro
16. REMARKS							
				15. Total --------->			0

1. Data Item No.	2. Title of Data Item	3. Subtitle

4. Authority (Data Acquisition Document No.)	5. Contract Reference	6. Requiring Office

7. DD 250 REQ.	9. Dist. Statement Required	10. Frequency	12. Date of First Submission	14. Distribution			
				a. Addressee	b. Copies		
8. APP Code		11. As of Date	13. Date of Subsequent Submission		Draft	Final	
						Reg	Repro
16. Remarks							
				15. Total --------->			

G. Prepared By	H. Date	I. Approve By	J. Date

CONTRACT DATA REQUIREMENTS LIST

FORM APPROVED
OMB No. 0704-0188

Public reporting burden for this collection of information is estimated to average 440 hours per response including the time for reviewing instructions, searching existing data sources, gathering and maintaining the data needed, and completing and reviewing the collection of information. Send comments regarding this burden estimate or any other aspects of this collecti or any aspects of of information including suggestions for reducing this burden to Department of Defense, Washington Headquarters Services, Directorate for Information Operations and R 1215 Jefferson Davis Highway, Suite 1204, Arlington VA 22202-4302, and to the Office of Management and Budget, Paperwork Reduction Project (0704-0188), Washington DC 20503. Please DO NOT RETURN your form to either of these addresses. Send completed form to the Government issuing Contracting Officer for the Contract/PR No. listed in Block E.

A. Contract Line Item No.	B. Exhibit	C. Category:	Contract Data
	B	TPD _____	TM _____ OTHER _____

D. System/Item	E. Contract/PR No.	F: Contractor

1. Data Item No.	2. Title of Data Item	3. Subtitle
B003C	Proposed changes in CQC plan	

4. Authority (Data Acquisition Document No.)	5. Contract Reference	6. Requiring Office
	SECTION 01451B, para 1.3	A1

7. DD 250 REQ.	9. Dist. Statement Required	10. Frequency	12. Date of First Submission	14. Distribution
			10 DBD	
8. APP Code		11. As of Date	13. Date of Subsequent Submission	
GA		Award		

16. Remarks	a. Addressee	b. Copies Draft	Final Reg	Final Repro
	A1		5	0
	15. Total --------->		5	0

1. Data Item No.	2. Title of Data Item	3. Subtitle
B003D	CQC Records Form	

4. Authority (Data Acquisition Document No.)	5. Contract Reference	6. Requiring Office
OTIME	SECTION 01451B, para 1.3	A1

7. DD 250 REQ.	9. Dist. Statement Required	10. Frequency	12. Date of First Submission	14. Distribution
			(a)	
8. APP Code		11. As of Date	13. Date of Subsequent Submission	
GA		Award		

16. Remarks	a. Addressee	b. Copies Draft	Final Reg	Final Repro
(a) Submit with interim CQC Plan.	A1		5	0
	15. Total --------->		5	0

1. Data Item No.	2. Title of Data Item	3. Subtitle
B003E	Weekly CQC Records	

4. Authority (Data Acquisition Document No.)	5. Contract Reference	6. Requiring Office
	SECTION 01451B, para 1.3	A1

7. DD 250 REQ.	9. Dist. Statement Required	10. Frequency	12. Date of First Submission	14 Distribution
		W	ASREQ	
8. APP Code		11. As of Date	13. Date of Subsequent Submission	
FIO		Award		

16. REMARKS	a. Addressee	b. Copies Draft	Final Reg	Final Repro
	A1		3	0
	15. Total --------->		3	0

1. Data Item No.	2. Title of Data Item	3. Subtitle

4. Authority (Data Acquisition Document No.)	5. Contract Reference	6. Requiring Office

7. DD 250 REQ.	9. Dist. Statement Required	10. Frequency	12. Date of First Submission	14. Distribution
8. APP Code		11. As of Date	13. Date of Subsequent Submission	

16. Remarks	a. Addressee	b. Copies Draft	Final Reg	Final Repro
	15. Total --------->			

G. Prepared By	H. Date	I. Approve By	J. Date

CONTRACT DATA REQUIREMENTS LIST

FORM APPROVED
OMB No. 0704-0188

Public reporting burden for this collection of information is estimated to average 440 hours per response including the time for reviewing instructions, searching existing data sources, gathering and maintaining the data needed, and completing and reviewing the collection of information. Send comments regarding this burden estimate or any other aspects of this collecti or any aspects of of information including suggestions for reducing this burden to Department of Defense, Washington Headquarters Services, Directorate for Information Operations and R 1215 Jefferson Davis Highway, Suite 1204, Arlington VA 22202-4302, and to the Office of Management and Budget, Paperwork Reduction Project (0704-0188), Washington DC 20503. Please DO NOT RETURN your form to either of these addresses. Send completed form to the Government issuing Contracting Officer for the Contract/PR No. listed in Block E.

A. Contract Line Item No.	B. Exhibit	C. Category:	Contract Data
	B	TPD _____	TM _____ OTHER _____

D. System/Item	E. Contract/PR No.	F: Contractor

1. Data Item No.	2. Title of Data Item	3. Subtitle
B004A	Drawings Of Temporary Power Connections	

4. Authority (Data Acquisition Document No.)	5. Contract Reference	6. Requiring Office
	SECTION 01501, para 1.6.3	A1

7. DD 250 REQ.	9. Dist. Statement Required	10. Frequency	12. Date of First Submission	14. Distribution
			(a)	
8. APP Code		11. As of Date	13. Date of Subsequent Submission	
GA		Award	R/ASR	

16. Remarks	a. Addressee	b. Copies Draft	Final Reg	Final Repro
(a) 7 CD prior to installation	A1		5	0
	15. Total --------->		5	0

1. Data Item No.	2. Title of Data Item	3. Subtitle
B004B	Fall Protection System	

4. Authority (Data Acquisition Document No.)	5. Contract Reference	6. Requiring Office
	SECTION 01501, para 1.10	A1

7. DD 250 REQ.	9. Dist. Statement Required	10. Frequency	12. Date of First Submission	14. Distribution
			(a)	
8. APP Code		11. As of Date	13. Date of Subsequent Submission	
GA		Award		

16. Remarks	a. Addressee	b. Copies Draft	Final Reg	Final Repro
(a) 10 CD prior to work in elevated area	A1		3	
	15. Total --------->		3	

1. Data Item No.	2. Title of Data Item	3. Subtitle
B004C	Security Fence Closure	

4. Authority (Data Acquisition Document No.)	5. Contract Reference	6. Requiring Office
	SECTION 01501, para 1.13	A1

7. DD 250 REQ.	9. Dist. Statement Required	10. Frequency	12. Date of First Submission	14 Distribution
			(a)	
8. APP Code		11. As of Date	13. Date of Subsequent Submission	
GA		Award		

16. REMARKS	a. Addressee	b. Copies Draft	Final Reg	Final Repro
(a) 10 CD prior to final fence closure	A1		3	0
	15. Total --------->		3	0

1. Data Item No.	2. Title of Data Item	3. Subtitle

4. Authority (Data Acquisition Document No.)	5. Contract Reference	6. Requiring Office

7. DD 250 REQ.	9. Dist. Statement Required	10. Frequency	12. Date of First Submission	14. Distribution
8. APP Code		11. As of Date	13. Date of Subsequent Submission	

16. Remarks	a. Addressee	b. Copies Draft	Final Reg	Final Repro
	15. Total --------->			

G. Prepared By	H. Date	I. Approve By	

CONTRACT DATA REQUIREMENTS LIST

FORM APPROVED
OMB No. 0704-0188

Public reporting burden for this collection of information is estimated to average 440 hours per response including the time for reviewing instructions, searching existing data sources, gathering and maintaining the data needed, and completing and reviewing the collection of information. Send comments regarding this burden estimate or any other aspects of this collecti or any aspects of of information including suggestions for reducing this burden to Department of Defense, Washington Headquarters Services, Directorate for Information Operations and R 1215 Jefferson Davis Highway, Suite 1204, Arlington VA 22202-4302, and to the Office of Management and Budget, Paperwork Reduction Project (0704-0188), Washington DC 20503. Please DO NOT RETURN your form to either of these addresses. Send completed form to the Government issuing Contracting Officer for the Contract/PR No. listed in Block E.

A. Contract Line Item No.	B. Exhibit	C. Category:	Contract Data
	B	TPD _____	TM _____ OTHER _____

D. System/Item	E. Contract/PR No.	F: Contractor

1. Data Item No.	2. Title of Data Item	3. Subtitle
C001A	Replacement or Upgraded Equipment	Product Data

4. Authority (Data Acquisition Document No.)	5. Contract Reference	6. Requiring Office
	SECTION 01610, para 1.4	A1

7. DD 250 REQ.	9. Dist. Statement Required	10. Frequency	12. Date of First Submission	14. Distribution
			ASREQ	
8. APP Code		11. As of Date	13. Date of Subsequent Submission	
GA		award		

16. REMARKS	a. Addressee	b. Copies Draft	Final Reg	Final Repro
	A1	6	5	1
	15. Total --------->		5	1

1. Data Item No.	2. Title of Data Item	3. Subtitle
C001B	Schedule of Replacement Parts	Product Data

4. Authority (Data Acquisition Document No.)	5. Contract Reference	6. Requiring Office
	SECTION 01610, para 1.4	A1

7. DD 250 REQ.	9. Dist. Statement Required	10. Frequency	12. Date of First Submission	14. Distribution
			ASREQ	
8. APP Code		11. As of Date	13. Date of Subsequent Submission	
GA		award		

16. Remarks	a. Addressee	b. Copies Draft	Final Reg	Final Repro
	A1	6	5	1
	15. Total --------->		5	1

1. Data Item No.	2. Title of Data Item	3. Subtitle
C001C	Installed Systems	Shop Drawings

4. Authority (Data Acquisition Document No.)	5. Contract Reference	6. Requiring Office
	SECTION 01610, para 1.4	A1

7. DD 250 REQ.	9. Dist. Statement Required	10. Frequency	12. Date of First Submission	14. Distribution
			(a)	
8. APP Code		11. As of Date	13. Date of Subsequent Submission (b)	
GA		Award		

16. Remarks	a. Addressee	b. Copies Draft	Final Reg	Final Repro
(a) Draft NLT 14 CD prior to installation of equipment	A1	3	3	
(b) NLT 30 CD after installation of equipment				
	15. Total --------->	3	3	

1. Data Item No.	2. Title of Data Item	3. Subtitle
C001D	O&M Data	Instructions

4. Authority (Data Acquisition Document No.)	5. Contract Reference	6. Requiring Office
	SECTION 01610, para 1.4	A1

7. DD 250 REQ.	9. Dist. Statement Required	10. Frequency	12. Date of First Submission	14. Distribution
			(a)	
8. APP Code		11. As of Date	13. Date of Subsequent Submission (b)	
GA		Award		

16. Remarks	a. Addressee	b. Copies Draft	Final Reg	Final Repro
(a) NLT 14 CD prior to installation of equipment	A1	3	3	
(b) NLT 30 CD after installation of equipment				
	15. Total --------->	3	3	

G. Prepared By	H. Date	I. Approve By	

CONTRACT DATA REQUIREMENTS LIST

FORM APPROVED
OMB No. 0704-0188

Public reporting burden for this collection of information is estimated to average 440 hours per response including the time for reviewing instructions, searching existing data sources, gathering and maintaining the data needed, and completing and reviewing the collection of information. Send comments regarding this burden estimate or any other aspects of this collecti or any aspects of of information including suggestions for reducing this burden to Department of Defense, Washington Headquarters Services, Directorate for Information Operations and R 1215 Jefferson Davis Highway, Suite 1204, Arlington VA 22202-4302, and to the Office of Management and Budget, Paperwork Reduction Project (0704-0188), Washington DC 20503. Please DO NOT RETURN your form to either of these addresses. Send completed form to the Government issuing Contracting Officer for the Contract/PR No. listed in Block E.

A. Contract Line Item No.	B. Exhibit	C. Category:	Contract Data
	B	TPD _____	TM _____ OTHER _____

D. System/Item	E. Contract/PR No.	F: Contractor

1. Data Item No.	2. Title of Data Item	3. Subtitle
C001E	Field Testing	Reports

4. Authority (Data Acquisition Document No.)	5. Contract Reference	6. Requiring Office
	SECTION 01610, para 1.4	A1

7. DD 250 REQ.	9. Dist. Statement Required	10. Frequency	12. Date of First Submission
			ASREQ
8. APP Code		**11. As of Date**	**13. Date of Subsequent Submission**
FIO		Award	ASREQ

14. Distribution	b. Copies		
a. Addressee	Draft	Final Reg	Final Repro
A1	6	5	1
15. Total --------->		5	1

16. Remarks

1. Data Item No.	2. Title of Data Item	3. Subtitle
C002A	Record of Equipment and Materials	Data

4. Authority (Data Acquisition Document No.)	5. Contract Reference	6. Requiring Office
	SECTION 01782, para 1.1	A1

7. DD 250 REQ.	9. Dist. Statement Required	10. Frequency	12. Date of First Submission
			(a)
8. APP Code		**11. As of Date**	**13. Date of Subsequent Submission**
GA		award	(b)

14. Distribution	b. Copies		
a. Addressee	Draft	Final Reg	Final Repro
A1	2	2	
15. Total --------->	2	2	

16. Remarks
(a) 21 CD prior to closeout
(b) NLT 30 CD after on-site period

1. Data Item No.	2. Title of Data Item	3. Subtitle
C002B	Warranty Tags	Records

4. Authority (Data Acquisition Document No.)	5. Contract Reference	6. Requiring Office
	SECTION 01782, para 1.1	A1

7. DD 250 REQ.	9. Dist. Statement Required	10. Frequency	12. Date of First Submission
		OTIME	(a)
8. APP Code		**11. As of Date**	**13. Date of Subsequent Submission**
GA		Award	

14. Distribution	b. Copies		
a. Addressee	Draft	Final Reg	Final Repro
A1		2	
15. Total --------->		2	

16. Remarks
(a) 30 CD prior to closeout

1. Data Item No.	2. Title of Data Item	3. Subtitle
C002C	Utilities	Records

4. Authority (Data Acquisition Document No.)	5. Contract Reference	6. Requiring Office
	SECTION 01782, para 1.1	A1

7. DD 250 REQ.	9. Dist. Statement Required	10. Frequency	12. Date of First Submission
		OTIME	(a)
8. APP Code		**11. As of Date**	**13. Date of Subsequent Submission**
FIO		Closeout	

14. Distribution	b. Copies		
a. Addressee	Draft	Final Reg	Final Repro
A1		2	
15. Total --------->		2	

16. Remarks
(a) 30 CD prior to closeout

G. Prepared By	H. Date	I. Approve By	

CONTRACT DATA REQUIREMENTS LIST

FORM APPROVED
OMB No. 0704-0188

Public reporting burden for this collection of information is estimated to average 440 hours per response including the time for reviewing instructions, searching existing data sources, gathering and maintaining the data needed, and completing and reviewing the collection of information. Send comments regarding this burden estimate or any other aspects of this collecti or any aspects of of information including suggestions for reducing this burden to Department of Defense, Washington Headquarters Services, Directorate for Information Operations and R 1215 Jefferson Davis Highway, Suite 1204, Arlington VA 22202-4302, and to the Office of Management and Budget, Paperwork Reduction Project (0704-0188), Washington DC 20503. Please DO NOT RETURN your form to either of these addresses. Send completed form to the Government issuing Contracting Officer for the Contract/PR No. listed in Block E.

A. Contract Line Item No.	B. Exhibit	C. Category:	Contract Data
	B	TPD _____	TM _____ OTHER _____

D. System/Item	E. Contract/PR No.	F: Contractor

1. Data Item No.	2. Title of Data Item	3. Subtitle
C003	Warranties	

4. Authority (Data Acquisition Document No.)	5. Contract Reference	6. Requiring Office
	SECTION 01785	A1

7. DD 250 REQ.	9. Dist. Statement Required	10. Frequency	12. Date of First Submission	14. Distribution			
		OTIME	ASREQ	a. Addressee	b. Copies		
8. APP Code		11. As of Date	13. Date of Subsequent Submission		Draft	Final	
						Reg	Repro
FIO		NTP					

16. Remarks Submit all standard or special manufacturer warranties at time of equipment installation

a. Addressee	Draft	Final Reg	Final Repro
A1		3	
15. Total --------->		3	

1. Data Item No.	2. Title of Data Item	3. Subtitle

4. Authority (Data Acquisition Document No.)	5. Contract Reference	6. Requiring Office

7. DD 250 REQ.	9. Dist. Statement Required	10. Frequency	12. Date of First Submission	14. Distribution			
				a. Addressee	b. Copies		
8. APP Code		11. As of Date	13. Date of Subsequent Submission		Draft	Final	
						Reg	Repro

16. Remarks

a. Addressee	Draft	Final Reg	Final Repro
15. Total --------->			

1. Data Item No.	2. Title of Data Item	3. Subtitle

4. Authority (Data Acquisition Document No.)	5. Contract Reference	6. Requiring Office

7. DD 250 REQ.	9. Dist. Statement Required	10. Frequency	12. Date of First Submission	14 Distribution			
				a. Addressee	b. Copies		
8. APP Code		11. As of Date	13. Date of Subsequent Submission		Draft	Final	
						Reg	CADD

16. REMARKS

a. Addressee	Draft	Final Reg	Final CADD
15. Total --------->			

1. Data Item No.	2. Title of Data Item	3. Subtitle

4. Authority (Data Acquisition Document No.)	5. Contract Reference	6. Requiring Office

7. DD 250 REQ.	9. Dist. Statement Required	10. Frequency	12. Date of First Submission	14. Distribution			
			(a)	a. Addressee	b. Copies		
8. APP Code		11. As of Date	13. Date of Subsequent Submission		Draft	Final	
						Reg	Repro

16. Remarks

a. Addressee	Draft	Final Reg	Final Repro
15. Total --------->			

G. Prepared By	H. Date	I. Approve By	

CONTRACT DATA REQUIREMENTS LIST

FORM APPROVED
OMB No. 0704-0188

Public reporting burden for this collection of information is estimated to average 440 hours per response including the time for reviewing instructions, searching existing data sources, gathering and maintaining the data needed, and completing and reviewing the collection of information. Send comments regarding this burden estimate or any other aspects of this collecti or any aspects of of information including suggestions for reducing this burden to Department of Defense, Washington Headquarters Services, Directorate for Information Operations and R 1215 Jefferson Davis Highway, Suite 1204, Arlington VA 22202-4302, and to the Office of Management and Budget, Paperwork Reduction Project (0704-0188), Washington DC 20503. Please DO NOT RETURN your form to either of these addresses. Send completed form to the Government issuing Contracting Officer for the Contract/PR No. listed in Block E.

A. Contract Line Item No.	B. Exhibit	C. Category:	Contract Data
	B	TPD _____	TM _____ OTHER _____

D. System/Item	E. Contract/PR No.	F: Contractor

1. Data Item No.	2. Title of Data Item	3. Subtitle
C004A	Preventative Maintenance Plan (Amendment)	

4. Authority (Data Acquisition Document No.)	5. Contract Reference	6. Requiring Office
	SECTION 01830, para 1.5	A1

7. DD 250 REQ.	9. Dist. Statement Required	10. Frequency	12. Date of First Submission	14. Distribution
			90 DAC	
8. APP Code		11. As of Date	13. Date of Subsequent Submission	
GA		Award	R/ASR	

a. Addressee	b. Copies Draft	Final Reg	Final Repro
A1		5	0
15. Total --------->		5	0

16. Remarks

1. Data Item No.	2. Title of Data Item	3. Subtitle
C004B	Valve Position Chart	

4. Authority (Data Acquisition Document No.)	5. Contract Reference	6. Requiring Office
	SECTION 01830, para 1.5	A1

7. DD 250 REQ.	9. Dist. Statement Required	10. Frequency	12. Date of First Submission	14. Distribution
			90 DAC	
8. APP Code		11. As of Date	13. Date of Subsequent Submission	
GA		Award	(a)	

a. Addressee	b. Copies Draft	Final Reg	Final Repro
A1		5	
15. Total --------->		5	

16. Remarks
(a) 21 CD prior to closeout

1. Data Item No.	2. Title of Data Item	3. Subtitle
C004C	Well Reconditioning Contractor	

4. Authority (Data Acquisition Document No.)	5. Contract Reference	6. Requiring Office
	SECTION 01830, para 1.5	A1

7. DD 250 REQ.	9. Dist. Statement Required	10. Frequency	12. Date of First Submission	14 Distribution
		OTIME	21 DBD	
8. APP Code		11. As of Date	13. Date of Subsequent Submission	
GA		Award		

a. Addressee	b. Copies Draft	Final Reg	Final Repro
A1		5	0
15. Total --------->		5	0

16. REMARKS

1. Data Item No.	2. Title of Data Item	3. Subtitle
C004D	Notification of Unscheduled Maintenance Activities Report	

4. Authority (Data Acquisition Document No.)	5. Contract Reference	6. Requiring Office
	SECTION 01830, para 1.5	A1

7. DD 250 REQ.	9. Dist. Statement Required	10. Frequency	12. Date of First Submission	14. Distribution
		OTIME	ASREQ	
8. APP Code		11. As of Date	13. Date of Subsequent Submission	
FIO		Award		

a. Addressee	b. Copies Draft	Final Reg	Final Repro
A1		3	
15. Total --------->		3	

16. Remarks

G. Prepared By	H. Date	I. Approve By	

CONTRACT DATA REQUIREMENTS LIST

FORM APPROVED
OMB No. 0704-0188

Public reporting burden for this collection of information is estimated to average 440 hours per response including the time for reviewing instructions, searching existing data sources, gathering and maintaining the data needed, and completing and reviewing the collection of information. Send comments regarding this burden estimate or any other aspects of this collecti or any aspects of of information including suggestions for reducing this burden to Department of Defense, Washington Headquarters Services, Directorate for Information Operations and R 1215 Jefferson Davis Highway, Suite 1204, Arlington VA 22202-4302, and to the Office of Management and Budget, Paperwork Reduction Project (0704-0188), Washington DC 20503. Please DO NOT RETURN your form to either of these addresses. Send completed form to the Government issuing Contracting Officer for the Contract/PR No. listed in Block E.

A. Contract Line Item No.	B. Exhibit	C. Category:	Contract Data
	B	TPD _____	TM _____ OTHER _____

D. System/Item	E. Contract/PR No.	F: Contractor

1. Data Item No.	2. Title of Data Item	3. Subtitle
C004E	Notification of Unscheduled Shut Down Report	

4. Authority (Data Acquisition Document No.)	5. Contract Reference	6. Requiring Office
	SECTION 01830, para 1.5	A1

7. DD 250 REQ.	9. Dist. Statement Required	10. Frequency	12. Date of First Submission	14. Distribution
		OTIME	ASREQ	
8. APP Code		11. As of Date	13. Date of Subsequent Submission	
FIO		Award		

a. Addressee	b. Copies Draft	Final Reg	Final Repro
A1		3	0
15. Total --------->		3	0

16. Remarks

1. Data Item No.	2. Title of Data Item	3. Subtitle
D001A	Waste Management Plan (Amendment)	

4. Authority (Data Acquisition Document No.)	5. Contract Reference	6. Requiring Office
	SECTION 02120, para 1.3	A1

7. DD 250 REQ.	9. Dist. Statement Required	10. Frequency	12. Date of First Submission	14. Distribution
			(a)	
8. APP Code		11. As of Date	13. Date of Subsequent Submission	
GA		Award	R/ASR	

a. Addressee	b. Copies Draft	Final Reg	Final Repro
A1		5	
15. Total --------->		5	

16. Remarks
(a) Submit with Management Plan

1. Data Item No.	2. Title of Data Item	3. Subtitle
D001B	Recordkeeping	

4. Authority (Data Acquisition Document No.)	5. Contract Reference	6. Requiring Office
	SECTION 02120, para 1.3	A1

7. DD 250 REQ.	9. Dist. Statement Required	10. Frequency	12. Date of First Submission	14 Distribution
			ASREQ	
8. APP Code		11. As of Date	13. Date of Subsequent Submission	
GA		Award		

a. Addressee	b. Copies Draft	Final Reg	Final Repro
A1		5	0
15. Total --------->		5	0

16. REMARKS
Data for filing state annual or
EPA biennial reports

1. Data Item No.	2. Title of Data Item	3. Subtitle
D001C	Spill Response Notification	

4. Authority (Data Acquisition Document No.)	5. Contract Reference	6. Requiring Office
	SECTION 02120, para 1.3	A1

7. DD 250 REQ.	9. Dist. Statement Required	10. Frequency	12. Date of First Submission	14. Distribution
8. APP Code		11. As of Date	13. Date of Subsequent Submission	
FIO		Award		

a. Addressee	b. Copies Draft	Final Reg	Final Repro
15. Total --------->			

16. Remarks

G. Prepared By	H. Date	I. Approve By	

CONTRACT DATA REQUIREMENTS LIST

FORM APPROVED
OMB No. 0704-0188

Public reporting burden for this collection of information is estimated to average 440 hours per response including the time for reviewing instructions, searching existing data sources, gathering and maintaining the data needed, and completing and reviewing the collection of information. Send comments regarding this burden estimate or any other aspects of this collecti or any aspects of of information including suggestions for reducing this burden to Department of Defense, Washington Headquarters Services, Directorate for Information Operations and R 1215 Jefferson Davis Highway, Suite 1204, Arlington VA 22202-4302, and to the Office of Management and Budget, Paperwork Reduction Project (0704-0188), Washington DC 20503. Please DO NOT RETURN your form to either of these addresses. Send completed form to the Government issuing Contracting Officer for the Contract/PR No. listed in Block E.

A. Contract Line Item No.	B. Exhibit	C. Category:	Contract Data
	B	TPD _____	TM _____ OTHER _____

D. System/Item	E. Contract/PR No.	F: Contractor

1. Data Item No.	2. Title of Data Item	3. Subtitle
D001D	Exception Reports	

4. Authority (Data Acquisition Document No.)	5. Contract Reference	6. Requiring Office
	SECTION 02120, para 1.3	A1

7. DD 250 REQ.	9. Dist. Statement Required	10. Frequency	12. Date of First Submission	14. Distribution
			(a)	
8. APP Code		11. As of Date	13. Date of Subsequent Submission	
GA		Award		

a. Addressee	b. Copies Draft	Final Reg	Final Repro
A1		5	0
15. Total --------->		5	0

16. Remarks
(a) 37 CD of shipment not receiving
a TSD manifest

1. Data Item No.	2. Title of Data Item	3. Subtitle
D001E	Qualifications	

4. Authority (Data Acquisition Document No.)	5. Contract Reference	6. Requiring Office
	SECTION 02120, para 1.3	A1

7. DD 250 REQ.	9. Dist. Statement Required	10. Frequency	12. Date of First Submission	14. Distribution
			30 DAC	
8. APP Code		11. As of Date	13. Date of Subsequent Submission	
FIO		Award		

a. Addressee	b. Copies Draft	Final Reg	Final Repro
A1		3	
15. Total --------->		3	

16. Remarks

1. Data Item No.	2. Title of Data Item	3. Subtitle
D001F	Off-Site Policy Compliance Certification	

4. Authority (Data Acquisition Document No.)	5. Contract Reference	6. Requiring Office
	SECTION 02120, para 1.3	A1

7. DD 250 REQ.	9. Dist. Statement Required	10. Frequency	12. Date of First Submission	14 Distribution
			14 DBD(a)	
8. APP Code		11. As of Date	13. Date of Subsequent Submission	
GA		DBD		

a. Addressee	b. Copies Draft	Final Reg	Final Repro
A1		5	0
15. Total --------->		5	0

16. REMARKS
(a) scheduled shipment date

1. Data Item No.	2. Title of Data Item	3. Subtitle
D001G	Certificates of Disposal	

4. Authority (Data Acquisition Document No.)	5. Contract Reference	6. Requiring Office
	SECTION 02120, para 1.3	A1

7. DD 250 REQ.	9. Dist. Statement Required	10. Frequency	12. Date of First Submission	14. Distribution
			(a)	
8. APP Code		11. As of Date	13. Date of Subsequent Submission	
FIO		Award		

a. Addressee	b. Copies Draft	Final Reg	Final Repro
A1		3	
15. Total --------->		3	

16. Remarks
(a) NLT 180 CD of initial shipment

G. Prepared By	H. Date	I. Approve By	

CONTRACT DATA REQUIREMENTS LIST

FORM APPROVED
OMB No. 0704-0188

Public reporting burden for this collection of information is estimated to average 440 hours per response including the time for reviewing instructions, searching existing data sources, gathering and maintaining the data needed, and completing and reviewing the collection of information. Send comments regarding this burden estimate or any other aspects of this collecti or any aspects of of information including suggestions for reducing this burden to Department of Defense, Washington Headquarters Services, Directorate for Information Operations and R 1215 Jefferson Davis Highway, Suite 1204, Arlington VA 22202-4302, and to the Office of Management and Budget, Paperwork Reduction Project (0704-0188), Washington DC 20503. Please DO NOT RETURN your form to either of these addresses. Send completed form to the Government issuing Contracting Officer for the Contract/PR No. listed in Block E.

A. Contract Line Item No.	B. Exhibit	C. Category:	
	B	TPD _____	Contract Data TM _____ OTHER _____

D. System/Item	E. Contract/PR No.	F: Contractor

1. Data Item No.	2. Title of Data Item	3. Subtitle
D001H	Packagings Certification	

4. Authority (Data Acquisition Document No.)	5. Contract Reference	6. Requiring Office
	SECTION 02120, para 1.3	A1

7. DD 250 REQ.	9. Dist. Statement Required	10. Frequency	12. Date of First Submission	14. Distribution
			(a)	
8. APP Code		11. As of Date	13. Date of Subsequent Submission	
GA		Award	(b)	

a. Addressee	b. Copies Draft	Final Reg	Final Repro
A1		5	0
15. Total --------->		5	0

16. Remarks
(a) 14 CD prior to on-site pickup
(b) Receipts within 35 CD after acceptance of shipment

1. Data Item No.	2. Title of Data Item	3. Subtitle
D001I	Notices of Non-Compliance and Notices of Violation	

4. Authority (Data Acquisition Document No.)	5. Contract Reference	6. Requiring Office
	SECTION 02120, para 1.3	A1

7. DD 250 REQ.	9. Dist. Statement Required	10. Frequency	12. Date of First Submission	14. Distribution
			(a)	
8. APP Code		11. As of Date	13. Date of Subsequent Submission	
FIO		Award		

a. Addressee	b. Copies Draft	Final Reg	Final Repro
A1		3	
15. Total --------->		3	

16. Remarks
(a) NLT 1 CD after receipt

1. Data Item No.	2. Title of Data Item	3. Subtitle

4. Authority (Data Acquisition Document No.)	5. Contract Reference	6. Requiring Office

7. DD 250 REQ.	9. Dist. Statement Required	10. Frequency	12. Date of First Submission	14 Distribution
8. APP Code		11. As of Date	13. Date of Subsequent Submission	

a. Addressee	b. Copies Draft	Final Reg	Final Repro
			0
15. Total --------->			0

16. REMARKS

1. Data Item No.	2. Title of Data Item	3. Subtitle

4. Authority (Data Acquisition Document No.)	5. Contract Reference	6. Requiring Office

7. DD 250 REQ.	9. Dist. Statement Required	10. Frequency	12. Date of First Submission	14. Distribution
8. APP Code		11. As of Date	13. Date of Subsequent Submission	

a. Addressee	b. Copies Draft	Final Reg	Final Repro
15. Total --------->			

16. Remarks

G. Prepared By	H. Date	I. Approve By	

Attachment

J2

INSTRUCTIONS FOR COMPLETING DD FORM 1423

ADDRESS AND CODES

1. Where the following office symbol is shown in Block 14 the material shall be addressed as follows:

Symbol	Address
A1	ATTN: CENWS-PM-EM (Kathy LeProwse) U.S. Army Corps of Engineers, Seattle District, P.O. Box 3755 Seattle, Washington 98124-3755

2. The codes, if used, are defined as follows:

Code	Block	Definition
(1) OTIME	10	One time.
(2) XX	7	Inspection and acceptance requirements specified elsewhere in contract.
(3) GA	8	Requires specific approval.
(4) FIO	8	For information only
(4) ONE/R	10	One time plus revisions.
(5) DAC	12	Days after receipt of contract.
(6) DAR	13	Days after receipt of drawings APPROVED AS NOTED or RETURNED FOR CORRECTION.
(7) DBD	13	Days before delivery.

(8)	ASREQ	10-13	As required.
(9)	M	10	Monthly.
(10)	W	10	Weekly.
(11)	O	12	Submit on last day of the month.
(12)	CD	12, 13	Calendar days.
(13)	NTP	11, as shown	Notice to proceed.
(14)	R/ASR	13	Revisions as required.
(15)	NLT	as shown	Not later than.

Attachment J3

DRAWING INDEX

EXISTING TREATMENT PLANT O&M, WYCKOFF/EAGLE HARBOR SUPERFUND SITE

DACW67-02-T-0001

Drawing File No. E-54-1-19

SHEET NUMBER	PLATE NUMBER	TITLE	REVISION NUMBER	DATE
1	G1	Title, Area Maps and Drawing Index		22 OCT 01
2	C1	General Site Plan		22 OCT 01

REFERENCE DRAWINGS

Reference drawings provided show conditions at time of construction. These drawings are furnished for information only and the Government does not warrant that conditions will be exactly as shown. Minor deviations can be anticipated and shall not be the basis for a claim for extra compensation.

REFERENCE DRAWING NUMBER	ORIGINAL SHEET NUMBER	TITLE	REVISION NUMBER	DATE
1	M - 0	Mechanical Legend		APR 1995
2	E - 0	Electrical Legend		APR 1995
3	---	P & ID Legend		---
4	C - 1	Site Plan		APR 1995
5	---	Process Flow Diagram		---

REFERENCE DRAWING NUMBER	ORIGINAL SHEET NUMBER	TITLE	REVISION NUMBER	DATE
6	---	P & ID Primary Treatment		APR 1995
7	---	P & ID Equalization Tank and Pump 401		APR 1995
8	P - 1	P & ID T-402 Effluent Pumps, Filter Press and Decon Sump		APR 1995
9	P - 2	P & ID Biological Treatment		APR 1995
10	P - 3	P & ID Tertiary Treatment		APR 1995
11	P - 4	P & ID Activated Carbon		APR 1995
12	M - 1	Piping Plan		APR 1995
13	M - 4	Mechanical Section and Details		APR 1995
14	M - 6	Filter Press Piping		APR 1995
15	---	Carbon Filter System, Mechanical Plan, Sections and Details		FEB 1994
16	M10.7 - 1	Primary System Upgrades Piping Plan		JAN 1995
17	M10.7 - 2	Primary System Upgrades Sections and Details		JAN 1995
18	M10.9 - 1	Extraction System Piping/Wells/Pumps		---
19	E - 1	Existing Electrical Site Plan		SEP 1994
20	E - 1	Electrical Equipment Location Site Plan		MAR 1995
21	E - 2	Existing Electrical One Line Diagram		---
22	E - 3	Heat Trace Schedule		MAR 1994
23	E7.2 - 4	Electrical Extraction System Partial Plan, Diagrams and Details		---

REFERENCE DRAWINGS

REFERENCE DRAWING NUMBER	ORIGINAL SHEET NUMBER	TITLE	REVISION NUMBER	DATE
24	E10.14 - 1	One-Line Diagram		JAN 1995
25	E10.14 - 2	Electrical Schedules and Details		JAN 1995
26	E10.14 - 3	Electrical Plans		JAN 1995

This page intentionally blank.

ATTACHMENT

J5

MAINTENANCE AND OPERATIONS DATA - EXISTING TREATMENT PLANT

This page intentionally blank.

Standard Operating Procedures

OPERATIONS MANAGEMENT INTERNATIONAL, INC

Wyckoff Project

Well Probing

December 1995

The following Standard Operating Procedure (SOP) is for Probing of the facilities' groundwater wells. Probing is customarily performed prior to attempting to recover free product from the well. The purpose of probing the wells is to identify the location and amount of free product (LNAPL and DNAPL) collected in the wells and also to identify the location of the liquid surface of the well. A Product Recovery Sheet is used to record findings. At the present time, we are using an ORS probe, capable of detecting water and free product. When the probe is not in water or free product, it is silent. When the probe is submerged in water , it emits an intermittent beep and when submerged in free product, it emits a constant beep. The probe is connected to a measuring tape which is connected to a totaling reel, capable of raising and lowering the probe. All measurements are taken at the top edge of the well's casing. It should be noted that traffic cones must be placed in a 25 ft. radius prior to performing the following procedures.

Note: Because this task is performed inside the inhalation exclusion zone, the "Buddy" system is required. As mentioned in section 10.5.3 of the Site Health and Safety Plan, in order for the buddy system to be established, visual contact must be maintained. Level C PPE is required.

Probing

It is advisable that before attempting to probe, one should obtain at least one absorbent pad for each well to be probed.

1. Let out approximately 6 inches of measuring tape and open probe cover. Pull probe from probe cover.
2. Slowly lower probe into well along side of well casing.
3. Stop when probe emits either an intermittent or constant beep.
4. If the probe emits an intermittent beep, enter the measurement in the "Depth to Water" column of the Product Recovery Sheet for that particular well and continue to step 8.
5. If the probe emits a constant beep, enter the measurement in the "Depth to LNAPL" column of the Product Recovery Sheet for that particular well.
6. Lower the probe until it emits an intermittent beep. Enter the measurement in the "Depth to Water" Column of the Product Recovery Sheet.
7. Subtract the "Depth to LNAPL" measurement from the "Depth of Water" measurement and enter the difference in the "Feet of LNAPL" Column of the Product Recovery Sheet.

8. Lower the probe until you either reach the bottom of the well or detect DNAPL. If you detect no DNAPL, move on to step 10.
9. If DNAPL is detected, either the measurement where it was detected in the "Depth to DNAPL" column of the Product Recovery Sheet.
10. Lower the prove until you reach the bottom of the well or the probe emits an intermittent beep.
11. Subtract the "Depth to DNAPL" measurement from this measurement. Enter the difference in the "Feet of DNAPL" column of the Product Recovery Sheet.
12. At this time, wrap a double folded absorbent pad around the probe's measuring tape and slowly reel the probe to the surface, being careful to remove all product from the probe's measuring tape. It is also advisable to hold the absorbent pad directly over the well opening to ensure that any product dripping off of the probe will not make contact with the ground.
13. When the probe is recovered from the well, it should also be carefully cleaned of all product and then returned to the probe protection cover.
14. Return all traffic cones to their original position in each corner of the well pad.

Standard Operating Procedures

OPERATIONS MANAGEMENT INTERNATIONAL, INC

Wyckoff Project

Product Pumping - PW-1 thru PW-7

December 1995

The following Standard Operating Procedure (SOP) is for the free product recovery from the facilities' groundwater wells. These procedures are written exclusively for recovering free product from production wells 1 through 7. Production well #8 has its own SOP. This SOP does not include the standard operating procedures for probing of the wells. All wells will be probed before attempting to recover free product. The following procedures will be split into two sections; pumping of LNAPL which is found on the surface of the well and DNAPL which is found at or near the bottom of the well. LNAPL and DNAPL will often be referred to as *Product*. It should be noted that traffic cones must be placed in a 25 ft. radius of the well pad prior to performing the following procedures. For additional information, see attached drawing - Well Pad Valve Locations.

Note: Because this task is performed inside the inhalation exclusion zone, the "Buddy" system is required. As mentioned in section 10.5.3 of the Site Health and Safety Plan, in order for the buddy system to be established, visual contact must be maintained. Level C PPE is required.

LNAPL

Assuming a sufficient amount of LNAPL has been detected in the well to warrant removal, perform the following procedures.

1. Lower the LNAPL suction piping into the well to a depth just above the water / LNAPL interface. This will prevent pumping excessive water with the LNAPL. For reference, the black HDPE suction pipe is 15 feet in length. Be sure the winch line connecting the suction is pipe is taught. This will prevent the suction piping from being pulled further into the well when pumping begins.
2. Ensure that LNAPL suction valve PWV-1 is open and that DNAPL suction valve PWV - 2 is closed.
3. Ensure that Product Pump suction valve PWV -17 is open , Product Tank inlet valve PWV - 12 is open and that all other valves directly related to the Product Pump are closed.
4. Remove the strap from the 150 gal. product tank and remove the lid.
5. Using the provided PVC measuring device, note the distance from the product surface level to the top edge of the tank. Using this measurement, move the measuring device to the outside of the tank and measure from the top edge of the tank down to the bottom of the measuring device. Note the location of the bottom of the measuring device in relationship with the graduated marking on the side of the tank. This will indicate how many gallons of product are in the product tank prior to pumping.
6. Turn the product pump to the *hand* position and observe the product entering the product tank. Continue to observe the product entering the tank until either water is noted or the flow becomes intermittent, indicating that the pump is sucking air.

7. Turn the product pump to the *off* position.
8. Using the provided PVC measuring device, note the distance from the product surface level to the top edge of the tank. Using this measurement, move the measuring device to the outside of the tank and measure from the top edge of the tank down to the bottom of the measuring device. Note the location of the bottom of the measuring device in relationship with the graduated marking on the side of the tank. This measurement minus the previous measurement will indicate the amount of product pumped in gals.
9. Replace the product tank lid and replace the strap securely.
10. Enter the amount of LNAPL recovered onto the Product Recovery Sheet.
11. If no DNAPL is to pumped, replace traffic cones to each corner of Well Pad, if DNAPL is to pumped, move on to next section.

DNAPL

Assuming a sufficient amount of DNAPL has been detected in the well to warrant removal, perform the following procedures.

1. Ensure that DNAPL suction valve PWV - 2 is open and that LNAPL suction valve PWV -1 is closed.
2. Ensure that Product Pump suction valve PWV - 17 is open , Product Tank inlet valve PWV - 12 is open and that all other valves directly related to the Product Pump are closed.
3. Remove the strap from the 150 gal. product tank and remove the lid.
4. Using the provided PVC measuring device, note the distance from the product surface level to the top edge of the tank. Using this measurement, move the measuring device to the outside of the tank and measure from the top edge of the tank down to the bottom of the measuring device. Note the location of the bottom of the measuring device in relationship with the graduated marking on the side of the tank. This will indicate how many gallons of product are in the product tank prior to pumping.
5. Turn the product pump to the *hand* position and observe the product entering the product tank. Continue to observe the product entering the tank until either water is noted or the product entering the tank takes on a *frothy* appearance.
6. Turn the product pump to the *off* position.
7. Using the provided PVC measuring device, note the distance from the product surface level to the top edge of the tank. Using this measurement, move the measuring device to the outside of the tank and measure from the top edge of the tank down to the bottom of the measuring device. Note the location of the bottom of the measuring device in relationship with the graduated marking on the side of the tank. This measurement minus the previous measurement will indicate the amount of product pumped in gals.
8. Replace the product tank lid and replace the strap securely.
9. Enter the amount of DNAPL recovered onto the Product Recovery Sheet.
10. Replace Traffic Cones to each corner of the Well Pad.

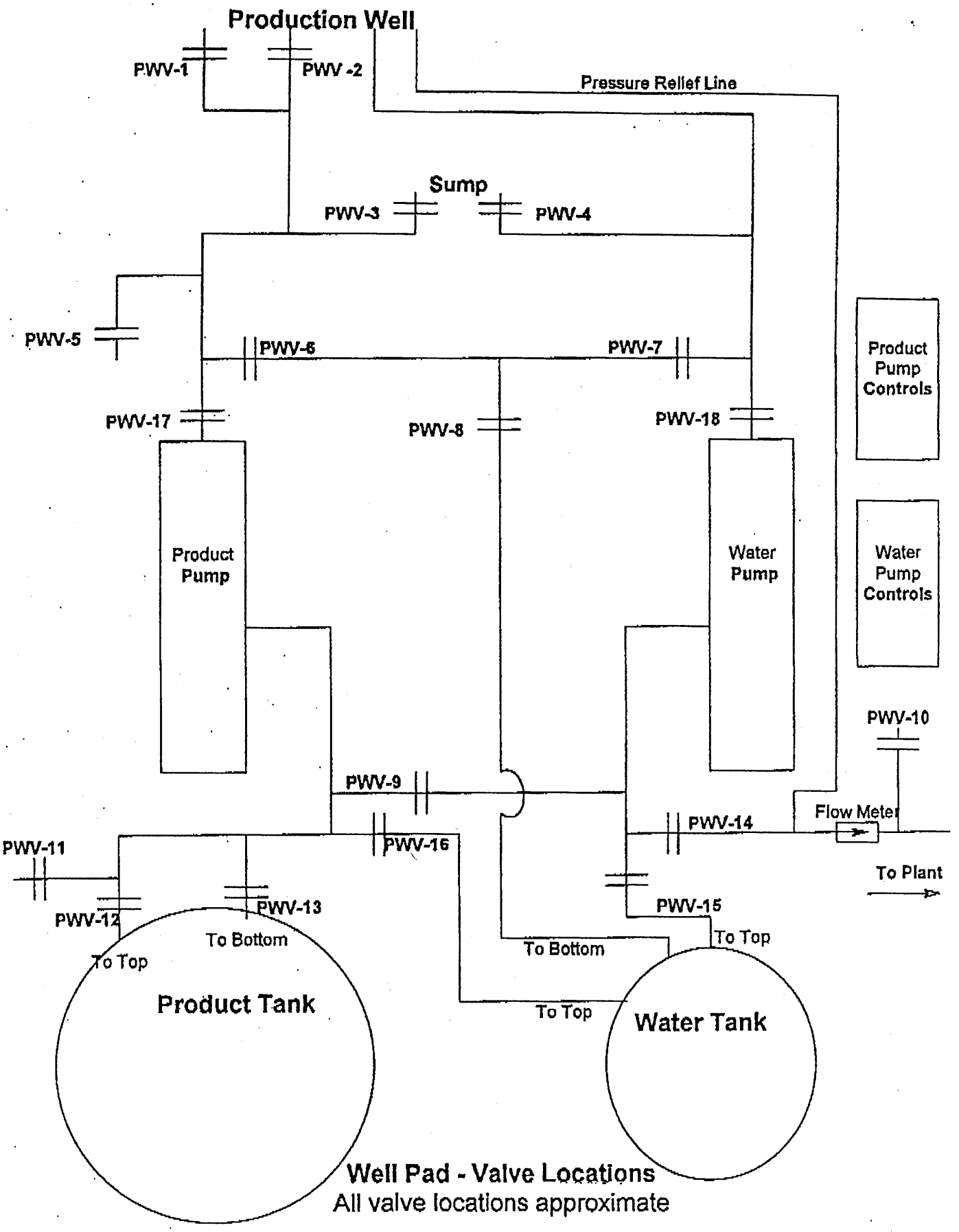

Well Pad - Valve Locations
All valve locations approximate

Standard Operating Procedures

OPERATIONS MANAGEMENT INTERNATIONAL, INC

Wyckoff Project

Product Pumping - PW-8

The following Standard Operating Procedure (SOP) is exclusively for the free product recovery from Production Well #8. This SOP does not include the standard operating procedures for probing of the wells. It is assumed at this time that all wells will be probed before attempting to recover free product. Since to date, no LNAPL has been recovered from PW-8, this SOP will deal only with the recovery of DNAPL. If LNAPL is detected at a later date, this SOP will be updated accordingly. It is not anticipated at this time that PW-8 will be a producer of LNAPL. DNAPL will often be referred to as *product*. It should be noted that traffic cones must be placed in a 25. ft. radius of the well pad prior to performing the following procedures.

Note: Because this task is performed inside the inhalation exclusion zone, the "Buddy" system is required. As mentioned in section 10.5.3 of the Site Health and Safety Plan, in order for the buddy system to be established, visual contact must be maintained. Level C PPE is required.

DNAPL

Assuming a sufficient amout of DNAPL has been detected in the well to warrant removal, perform the following tasks.

1. Remove the rain cover from the portable air compressor, obtain the two available 5 gal. buckets and remove the lids from one water drum and one product drum.
2. Direct the Air Diaphragm Pump discharge hose outlet into one of the 5 gal. buckets.
3. Slowly and carefully, open the the air valve on the Air Diaphragm Pump until the pump just starts to pump. It is typical to get a small amount of water at first. Observe the water entering the bucket until it starts to change to product. (note: by directing the pumps flow to the inside wall of the bucket one can more easily detect the transparancy of the water) When product is detected, turn the pump off.
4. Direct the discharge hose to the other 5 gal. bucket. Slowly and carefully, open the air valve on the Air Diaphragm Pump until the pump again starts to pump. Continue slowly pumping the product until the bucket is approximately one gallon from full (four gals. are easier to handle and pour). At this time, close the air valve.
5. Carefully dump the contents of the water bucket into the water drum and replace the water drum lid.
6. Carefully dump the contents of the product bucket into the product drum.
7. Continue pumping product to the buckets, following steps 4 and 6 until water is again detected or until the product takes on a *frothy* appearance. At this point, close the air valve.
8. Carefully dump the contents of the product bucket(s) into the product drum and replace the product drum lid.

9. Turn off the portable air compressor, replace the rain cover and return the 5 gal. buckets to their original location.
10. Enter the amount of product recovered onto the Product Recovery Sheet.
11. Upon completion, replace Traffic Cones to each corner of Product Pump.

Standard Operating Procedures

OPERATIONS MANAGEMENT INTERNATIONAL, INC

Wyckoff Project

Product Handling Associated With The Truck Mounted Tank

January 1996

The following Standard Operating Procedure (SOP) is for pumping product from groundwater well tanks to the 350 gallon truck mounted tank, and for pumping product from the truck mounted tank to T-105.

The groundwater well product tank is used to store up to 150 gallons of product (both DNAPL and LNAPL) that is collected during product pumping procedures. The procedures for pumping product from the groundwater extraction wells are found in a separate SOP. The well system is comprised of two progressive cavity pumps. The water pump draws contaminated groundwater from the extraction well and sends it to the groundwater treatment plant through HDPE piping. The product pump removes free product from the extraction well. The product pump is equipped with a reversing feature so that product can be removed from the product tank.

The truck mounted tank is mounted on the bed of the site's GSA vehicle. The tank is set up with a 2" ball valve and 20 feet of 1" chemical resistant product hose that is fitted with cam-lock quick disconnects.

Tank T-105 is used to store both LNAPL and DNAPL from the extraction wells and the primary treatment system until ultimate disposal takes place. Product from the truck mounted tank is transferred to T-105 by the primary system product pump DP-107.

Note: Because this task is performed inside the inhalation exclusion zone, the "Buddy" system is required. As mentioned in section 10.5.3 of the Site Health and Safety Plan, in order for the buddy system to be established, visual contact must be maintained. Level C PPE is required.

Product Pumping From Well Tank to Truck Mounted Tank

Refer to the attached Well Pad - Valve Locations schematic for pump and valve locations and numbers.

1. Make certain that the 2" ball valve at the bottom of the truck mounted tank is closed.
2. Connect the 1" product hose between the truck mounted tank and the cam-lock fitting at PWV-5. The product hose has a cam-lock plug on the free end that must be removed prior to connection to PWV-5.

3. Make certain all valves in the product piping system are closed.
4. Open PWV-5, PWV-13 (located at the bottom of the product tank), and the 2" ball valve at the truck mounted tank. It is advisable to open the top inspection port on the truck mounted tank, even though the port is equipped with an air vent valve.
5. Go to the product pump electrical control box and turn the pump on by placing the selector switch in the **REVERSE** position. The pump will turn on and transfer product from the well tank to the truck mounted tank. Monitor the level of product in the truck mounted tank so there is no risk of overfill.
6. When the well tank is empty, turn the product pump off by placing the selector switch in the **OFF** position at the product pump electrical control box.
7. Close the 2" ball valve at the truck mounted tank.
8. Close PWV-5 and PWV-12 and disconnect the hose at PWV-5.
9. Reconnect the cam-lock plug to the free end of the product hose. Store the product hose on the bed of the truck, making sure the free end of the product hose is inside of the truck bed's containment berm. Replace the inspection port lid on top of the truck mounted tank.

Product Pumping From Truck Mounted Tank to T-105.
Refer to the attached Valve Locations - Primary Product Pumping schematic for pump and valve locations and number.
1. Back the GSA truck up to the T-101 roughing tank area located on the north side of the treatment plant pad. Use extreme caution when backing up the truck so that the main groundwater pipeline and electrical conduit to the groundwater wells are not hit and damaged. SET EMERGENCY BRAKE.
2. Using the tilt bed feature of the GSA truck, lift the bed until the truck mounted tank is at a slight incline toward the back of the truck. Be extremely careful when the tank is full that no product is released through the inspection port on top of the truck mounted tank. It is advised to open the inspection port even though the port is equipped with an air vent valve.
3. Make certain the 2" ball valve on the truck mounted tank is closed. Remove the cam-lock plug from the free end of the 1" product hose and connect to valve V-107-C just before pump DP-107.
4. Ensure that the flowmeter at the truck tank discharge is installed and the totalizer is at zero.
5. Open valves V-107-A, V-107-B, V-107-C, and V-107-F. Make certain all other valves associated with DP-107 are closed.
6. Open the 2" ball valve on the truck mounted tank.
7. Turn on pump DP-107 and transfer product from the truck mounted tank to T-105.
8. When the truck mounted tank is empty, lower the tilt bed to its original position, shut off DP-107 and close valves V-107-F and V-107-C and the 2" ball valve on the truck mounted tank.
9. Remove the 1" product hose from V-107-C and replace the cam-lock plug in the free end of the product hose.
10. Store the product hose on the bed of the truck, making sure the free end of the product hose is inside of the truck bed's containment berm.
11. Replace the inspection port lid on top of the truck mounted tank.
12. Take reading from the flowmeter totalizer and enter this amount on the T-105 Product Record Sheet.

Valve Locations - Primary Product Pumping

note: All valve locations approximate

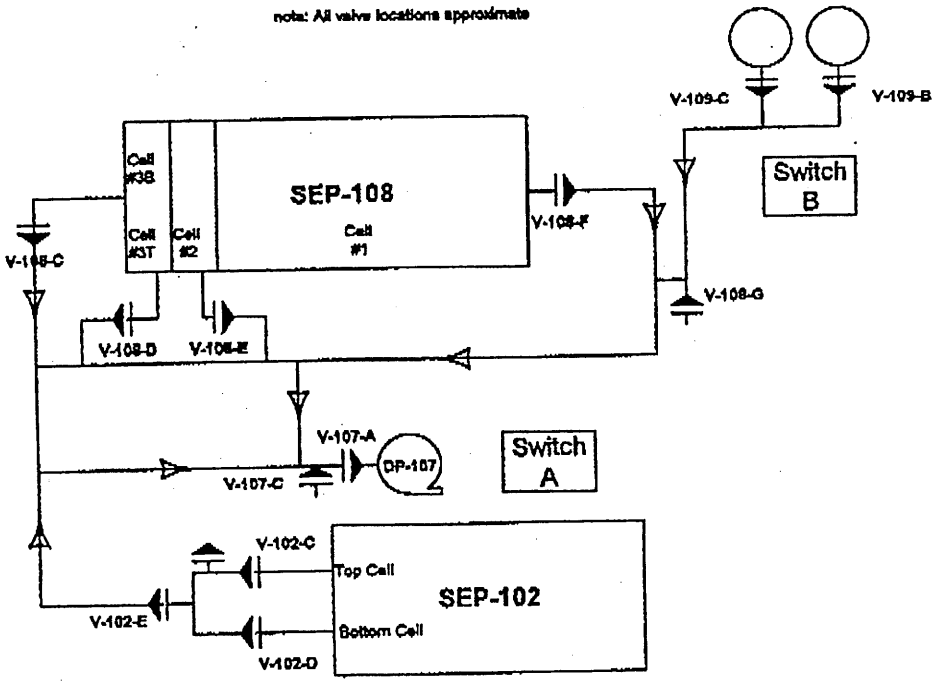

Suction Piping

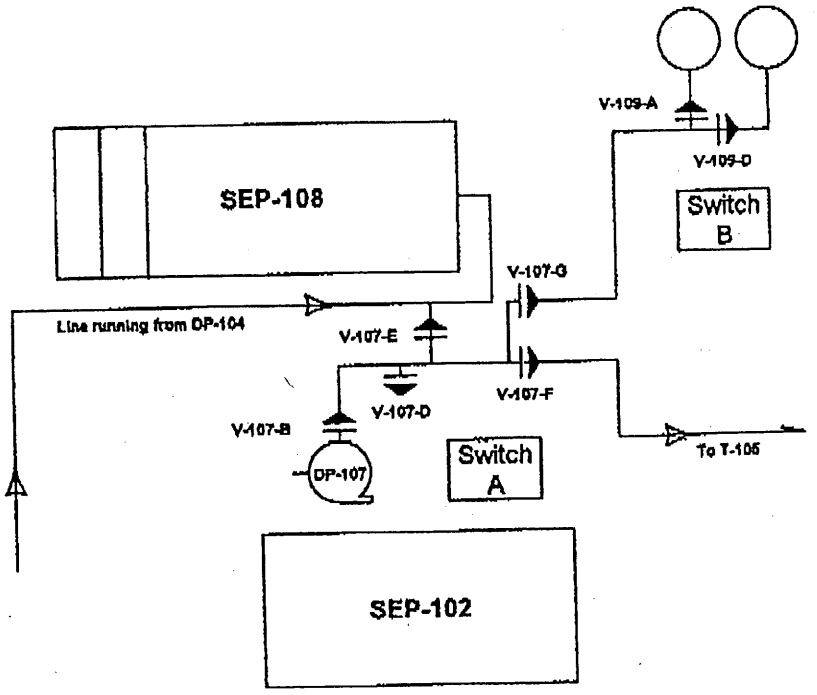

Discharge Piping

Legend

Indicates valve and direction of flow

Indicates direction of flow

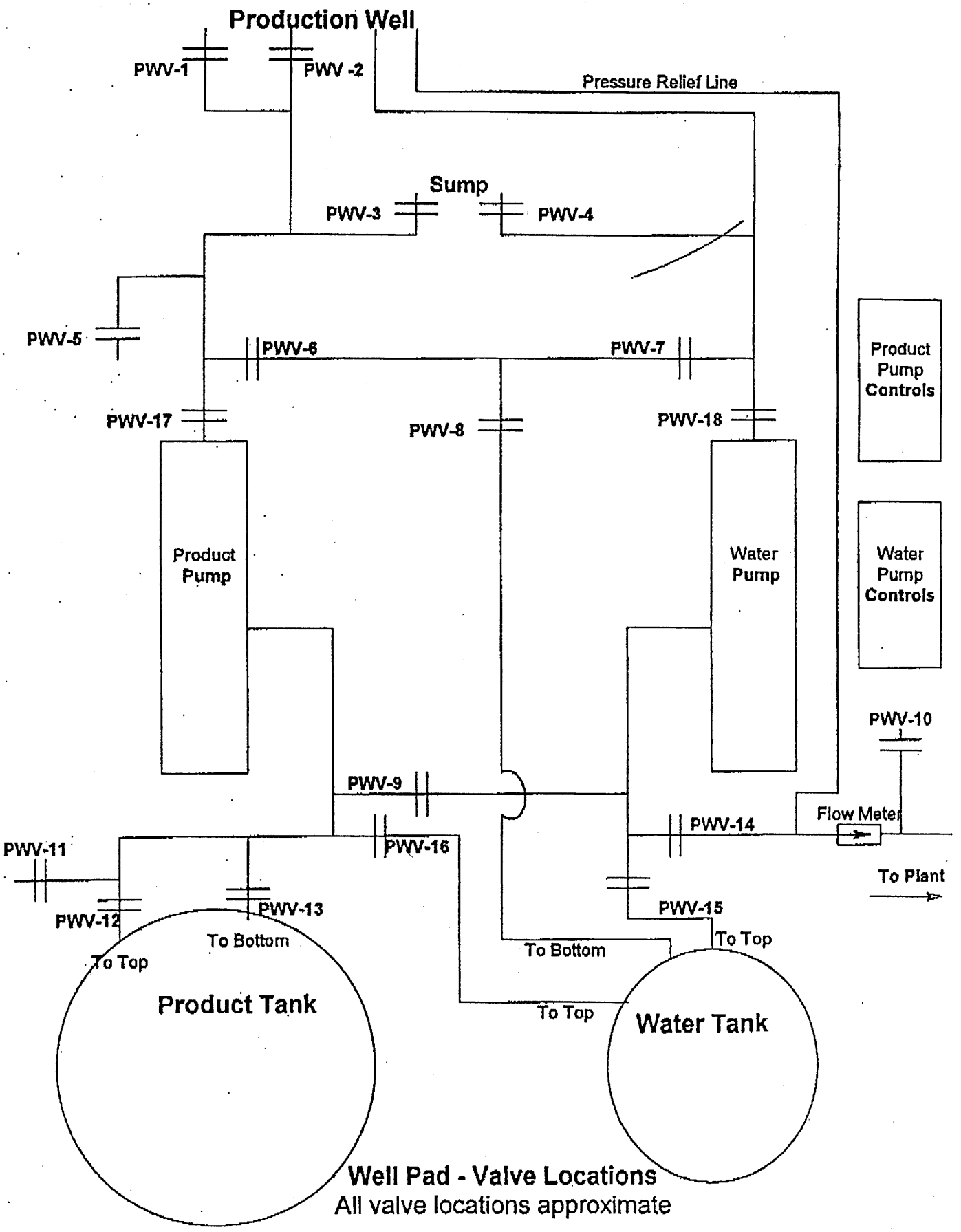

Well Pad - Valve Locations
All valve locations approximate

Standard Operating Procedures

OPERATIONS MANAGEMENT INTERNATIONAL, INC

Wyckoff Project

Primary Product Pumping

The following Standard Operating Procedure (SOP) is for pumping product from both SEP-108 and SEP-102. Product is pumped using pump DP-107. DP-107 is a progressive cavity-positive displacement pump. **It is very important that the pump never be run dry and both intake and discharge valves must be open before operating.** Failure to follow these procedures can result in damage to the pump, piping and valves.

There are two ON\OFF switches controlling DP-107. Switch A is located at the pump and Switch B is located at the Product/Water Tanks. SEP-108 has four locations which product can be recovered. Cell #1, which pulls off the bottom of the inlet of the tank, Cell #2, which pulls off the surface of the center section of the tank, Cell #3T, which pulls off the surface of the discharge at the end of the tank, and Cell #3B, which pulls off the bottom of the discharge end of the tank. Included with this SOP is a flow chart showing valve locations for both suction and discharge piping. It is advised that all operators read and understand this SOP and become familiar with all valve locations prior to pumping product. Also included with this SOP is an employee sign-off sheet. All associates are expected to read this SOP and sign the sign-off sheet confirming that they have read and understand all aspects of the SOP.

Note: Because this task is performed inside the inhalation exclusion zone, the "Buddy" system is required. As mentioned in section 10.5.3 of the Site Health and Safety Plan, in order for the buddy system to be established, visual contact must be maintained. Level C PPE is required.

SEP-108

A. To pump cell #1, proceed as follows;

1. Open Valve V-108-F and V-107-A in the suction piping.
2. Open Valve V-107-B, V-107-G, and V-109-A in the discharge piping.
3. Ensure that all other suction and discharge valves are closed.
4. Remove the lids from the water tank and the product tank.
5. Turn on DP-107 at Switch B and observe discharge flow into water tank.
6. When the discharge flow changes from water to product, turn off DP-107.
7. Open V-109-D and close V-109-A.
8. Using the provided measuring device, measure the distance from the top of the product tank to the surface level of the product in the product. Next , measure this distance along the outside of the tank and make a note of how much product is in the product tank.
9. Turn on DP-107 at Switch B and observe discharge flow into product tank.

10. When the discharge flow changes from product to water, turn off DP-107.
11. Using the provided measuring device, measure the distance from the top of the product tank to the surface level of the product in the product. Next , measure this distance along the outside of the tank. Subtract the first measurement from this measurement. The difference is the amount of product pumped . Enter this amount in the appropriate column on the Product Recovery Sheet.
11. Open V-109-B and close V-108-F in the suction piping.
12. Open V-107-F and close V-107-G in the discharge piping.
13. Turn on DP-107 at Switch B and observe level in Product Tank.
13. When the suction line at the bottom of the tank starts to suck air, turn off DP-107.
14. Open V-109-C and close V-109-B in the suction piping.
15. Turn on DP-107 at switch B and run DP-107 for approximately 10 seconds. This will clear product from the suction piping to valve V-107-F.
16. Open valve V-107-E and close valve V-107-F in the discharge piping.
17. Turn on DP-107 at switch B and observe the water level in the water tank.
18. When the suction line at the bottom of the tank starts to suck air, turn off DP-107.

At this point you have pumped product from cell #1, recorded the amount of product recovered from cell #1, pumped this recovered product to T-105, and emptied the water from the water tank.

To pump Cell #2, Cell #3Tand Cell#3B, follow the same procedures mentioned with the following exceptions.

Cell #2.

1.On line one above, replace valve V-108-F with valve V-108-E. All other procedures are the same.

Cell #3T.

1. On line one above, replace valve V-108-F with valve V-108-D. All other procedures are the same.

Cell #3B.

1. On line one above, replace valve V-108-F with valve V-108-C.

SEP-102

SEP-102 has two cell that product can be pumped from, the top cell and the bottom cell. The procedures for pumping product from SEP-102 are the same as the procedures for pumping SEP-108 with the following exceptions.

Bottom Cell.

1. On line one above, replace valve V-108-F with valve V-102-D.

Top Cell.

1. On line one above, replace valve V-108-F with valve V-102-C.

It should be noted that it is the operator's prerogative to modify these procedures to enhance product recovery and minimize effort and time. (example: An operator may choose to pump all cells in SEP-108 before pumping the product tank and water tank depending on amount of product recovered.)

Valve Locations - Primary Product Pumping

note: All valve locations approximate

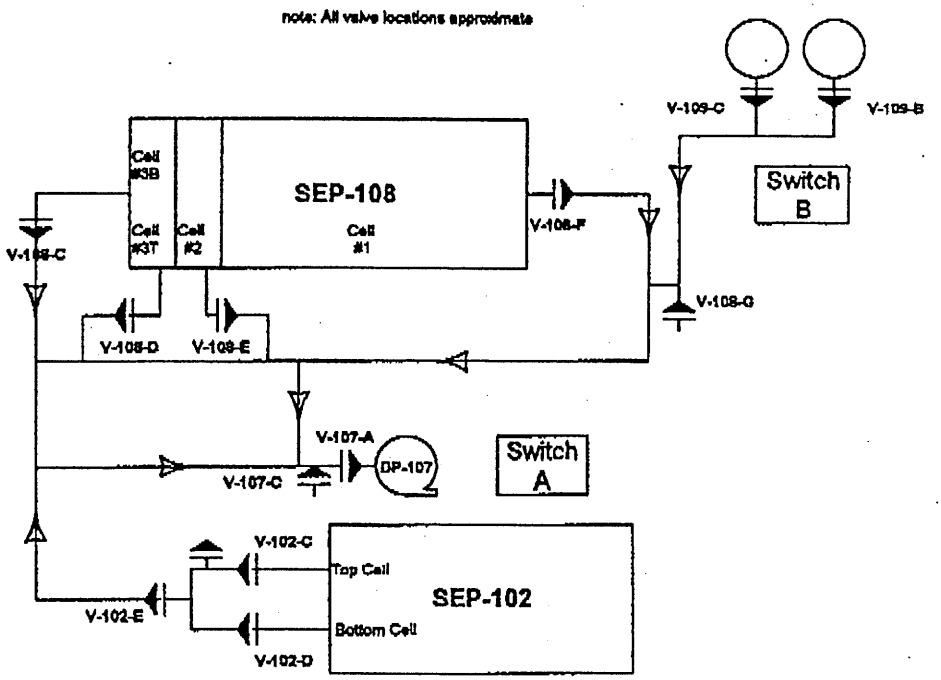

Suction Piping

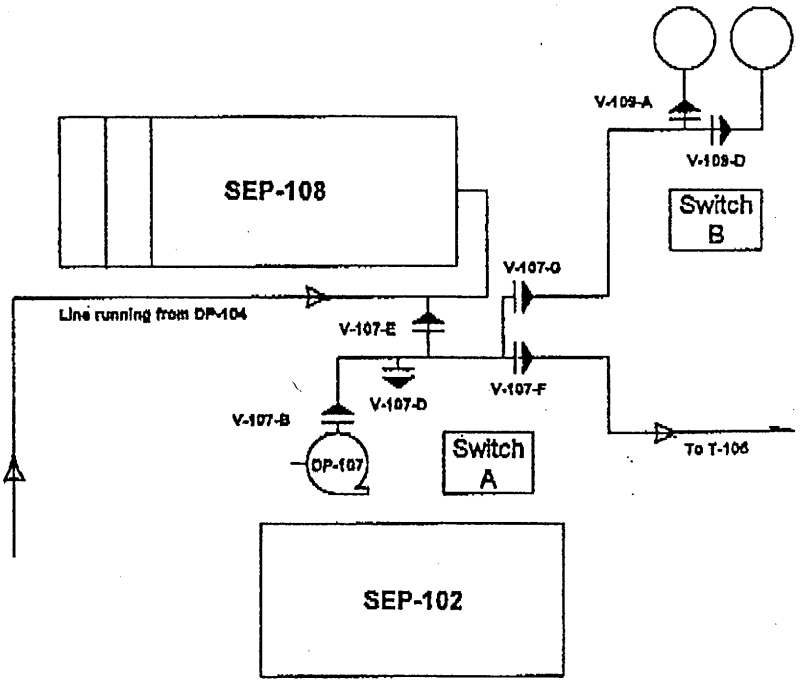

Discharge Piping

Legend

Indicates valve and direction of flow

Indicates direction of flow

This page intentionally blank

Auto Sampler Set-up

revised Feb 00

EQUIPMENT

1. 5 gallon Pyrex bottle
2. 1 liter graduated cylinder
3. Roll of strapping tape, scissors or pocket knife
4. Graduated 5 liter plastic pitcher (should be in sampler cabinet)

PROCEDURE

1. Check "Compliance Sampling Plan" to determine the amount of sample to be collected.
2. Normally the sampler should still be on and "Program Complete" should be showing in the window.
3. Press "*" to enter program and change parameters. Answer the Questions as follows:
   - Alter Program -- YES
   - Enable advance program -- YES
   - Enter number of sample bottles (01) – YES
   - Enter units of bottle volume (gallons) – YES
   - Volume = (5 gallons) – YES
   - Enter units for intake tubing length (feet) – YES
   - Enter Length for intake tubing = (12 feet) – YES
   - Program Lock – NO
   - Set sample cabinet temperature, cabinet temp = (2C) – YES
   - Verify Program Delay – NO
   - Timed Mode – YES
   - Variable interval ? – YES
     - Interval 01 = 0001 minutes -- YES
     - Interval 02 = 0205 minutes -- YES
     - Interval 03 = 0001 minutes -- NO
   - Composite Mode/Continuous Mode – NO
   - Samples = (8) –YES
   - Change Volume ? – YES
   - Sample Volume, enter amount from Step 1 (should be in milliters, example 1100)
   - Calibrate Volume ? -- YES
   - Auto Calibrate ? -- YES
   - Ready to Pump ? Insure fill line is in the plastic pitcher, then enter—YES
   - Enter Actual amount pumped, in milliliters(example 1100)
   - Intake Rinses – NO
   - Intake Faults – NO
   - Enter I.D. Number, I.D. = 0000 – YES
   - Ready to Start, If sample amount pumped above was correct, place 5 gallon Pyrex Bottle in cabinet, place tygon fill tube in bottle. If sample amount pumped above was incorrect, repeat Auto Sample set-up steps to recalibrate sample volume. and Press "START PROGRAM
4. Tape tygon tubing into bottle, close cabinet and seal cabinet with EPA Custody seal. Press "START PROGRAM"
5. Draw Grab Sample from sample connection SP-11 spigot using 1liter beaker and take to lab for PH, DO and Temperature checks, log results in Field Parameters record book.

SECTION 2
Carbon Filter Backwash Procedures

The carbon filters have the capability (freeboard and valving) to be backwashed. The need for backwashing a carbon filter usually results from the accumulation of biosolids which pass through the multimedia filters. However, the filters are also backwashed after loading fresh carbon to remove carbon fines out of the filters.

One carbon filter is backwashed at a time. The P-206 pump used to backwash the multimedia filters is also used to backwash the carbon filters. The backwash water is routed to either the backwash tank, T-207 or the rain/spill sump. A carbon filter cannot be backwashed at the same time the multimedia filters are backwashed, and the backwash cannot be initiated until T-207 is empty if the T-207 option is chosen. This infers that the carbon backwash will occur in the afternoon after multimedia filter backwash water is pumped out of T-207.

Backwash of Carbon Fines

After loading fresh carbon (see SECTION 3 of this SOP), the carbon vessel shall be backwashed to remove carbon "fines". The backwash water is directed to either the T-207 backwash tank, then to the aerobic digester (and ultimately to the filter press) or to the rain/spill sump. Refer to the attached piping schematics (carbon filter piping schematic and backwash tank piping schematic) for valve identification when using the following procedures:

- Close the 1/2" main air valve for P-209.
- BACKWASH TANK OPTION: Open valve V-206-C4 and make certain valve V-206-C2 is closed and V-206-C5 (inlet to T-207) is open.
- RAIN/SPILL SUMP OPTION: Open valves V-206-C4, V-206-C2, and V-206-C3. Make certain that valve V-206-C5 (inlet to T-207) is closed.
- Open valves "C" and "G" on the filter to be backwashed.
- Open valves V-303-A1 (located at the bottom of tank T-303) and V-206-D (located on the discharge of P-206) to the predetermined % open mark, and turn on P-206.
- Open valve V-300-L, located to the west side of carbon filter T-300.
- Slowly open valve "I" on the carbon filter to be backwashed (dirty backwash water is routed to either T-207 or the rain/spill sump).
- Check the backwash flowmeter located just downstream from pump P-206. The flowrate should be between 100 and 125 gpm. Adjust V-206-D if necessary.

- Backwash the filter for a minimum of 30 minutes or until the backwash water clears. NOTE: MAKE SURE YOU DO NOT OVERFILL TANK T-207 IF USING THE BACKWASH TANK OPTION.
- When backwash is complete, close valves "I" and V-300-L.
- Turn off pump P-206 and close the pump's isolation valves.
- Align the carbon valving according to the carbon filter valve arrangement procedures (Section 1 of this SOP). NOTE: THE CARBON FILTER THAT WAS JUST BACKWASHED SHALL BE ALIGNED IN THE LAG 2 POSITION.
- DOUBLE CHECK THE VALVE ARRANGEMENTS ON ALL CARBON FILTERS.
- Check for proper operation of the carbon filters as indicated by the inlet and outlet pressure gauges.
- BACKWASH TANK OPTION: Open V-206-C6 backwash tank discharge valve. Ensure that V-206-C7 is open to the aerobic digester.
- BACKWASH TANK OPTION: Open the 1/2 " main air valve for P-209. Carbon filter backwash water is metered to the aerobic digester at approximately 20 gpm. P-209 will shut off automatically when T-207 is empty.

Carbon Backwash Procedures to Remove Biological Solids

The lead carbon filter will periodically plug with biological solids that break-through the multimedia filters. A carbon filter should be backwashed when the difference between inlet and outlet pressure equals or exceeds 10 psi. Refer to the attached piping schematics (carbon filter piping schematic and backwash tank piping schematic) for valve identification when using the following procedures:

- Close the 1/2" main air valve for P-209.
- Open valve V-206-C4 and make certain valve V-206-C2 is closed.
- Check T-402 to make certain there is enough capacity to hold an additional 30 to 60 minutes of influent volume.
- Turn off P-402A (or B) and close the appropriate pump isolation valve.
- Turn off P-205A (or B) and close the appropriate pump isolation valve.

- Close all valves on the carbon filter that is to be backwashed.
- Close valve "G" on the other two carbon filters, if necessary.
- Open valves "C" and "G" on the filter to be backwashed.
- Make certain valve V-206-C5 at the backwash tank is open.
- Open valves V-303-A1 (located at the bottom of tank T-303) and V-206-D (located on the discharge of P-206) to the predetermined % open mark, and turn on P-206.
- Open valve V-300-L, located to the west side of carbon filter T-300.
- Slowly open valve "T" on the carbon filter to be backwashed (dirty backwash water is routed to T-207).
- Check the backwash flowmeter located just downstream from pump P-206. The flowrate should be between 100 and 125 gpm. Adjust V-206-D if necessary.
- Backwash the filter for a minimum of 30 minutes or until the backwash water clears. NOTE: MAKE SURE YOU DO NOT OVERFILL TANK T-207. If T-207 is full and backwash water is still dirty, divert to the rain/spill sump by opening V-206-C2 and V-206-C3 and closing valve V-206-C5.
- When backwash is complete, close valve "T" and valve V-300-L.
- Turn off pump P-206 and close the pump's isolation valves.

The carbon vessel requires a 5 minute forward flush to set the carbon bed and clear the plumbing of residual carbon granules and biosolids. Forward flush to the rain/spill sump using the following procedures:

- Close valve "A" on the lead carbon vessel.
- Open valve "A" on the carbon vessel to be forward flushed.
- Open valves "D", "E", and "G" on the vessel to be forward flushed.
- Open valves V-300-L, V-206-C2, and V-206-C3. Close valve V-206-C5.
- Open appropriate isolation valves and turn on P-205A (or B) and forward flush the vessel for 5 minutes.

Complete the carbon backwash operation by putting the plant back on-line:

- Turn off pump P-205A (or B), close valves V-206-C2, V-206-C3, and V-300-L. Open valve V-206-C5.
- Align the carbon valving according to the carbon filter valve arrangement procedures (Section 1 of this SOP).
- DOUBLE CHECK THE VALVE ARRANGEMENTS ON ALL CARBON FILTERS.
- Open appropriate isolation valves and turn on P-205A (or B).
- Check for proper operation of the carbon filters as indicated by the inlet and outlet pressure gauges.
- Open appropriate isolation valves and turn on P-402A (or B).
- Open V-206-C6 backwash tank discharge valve. Ensure that V-206-C8 is open to the aeration basin.
- Open the 1/2 " main air valve for P-209. Carbon filter backwash water is metered to the aeration basin at approximately 20 gpm. P-209 will shut off automatically when T-207 is empty.

SECTION 3
Spent Carbon Unloading and New Carbon Loading

The lead carbon filter will "break-through" at a normal interval of every 3 or 4 months, depending on secondary system efficiency and groundwater flowrate. At this point, the spent carbon in the lead carbon filter must be removed and new carbon loaded in its place. This section is divided into steps to take to determine carbon filter breakthrough, procuring materials and equipment, unloading spent carbon, and loading new carbon.

Determination of Carbon Break-through

Carbon break-through is determined by observing influent verses effluent PAH and PCP concentrations at the lead carbon filter. PAH and PCP concentrations will start to elevate in the lead carbon effluent (SP-9 sample), but the filter has not experienced "breakthrough" until the effluent concentrations is essentially equal with the influent concentration (SP-8 sample). Since we have at minimum a two week lag period between sample date and when we receive lab data from the EPA Manchester lab, the lead carbon filter requires a carbon replacement when the effluent PAH or PCP concentration (take the worst case) is at 75% of the influent PAH or PCP concentration.

Procuring Materials and Equipment

When carbon breakthrough has been determined, materials and equipment must be procured to complete the carbon replacement. The site supervisor has responsibility for coordinating delivery of materials and equipment. The following steps outlines the procurement process:

- Check to make sure there is sufficient room in the on-site spent carbon storage tanks to store the removed carbon. If not, call Wayne Lindell/CH2M HILL at extension 5060 to schedule the delivery and to issue a purchase order for a 4000 (or 6000) gallon poly tank from Baker Tank Rentals.

- Plan to accomplish the carbon replacement for the following Thursday, if possible. All treatment plant personnel are on site on Thursdays.

- The critical path for a successful carbon replacement project is the delivery of new carbon. Call Wayne Lindell/CH2M HILL at extension 5060 at least a week prior to the scheduled delivery date to issue a purchase order for up to 16,000 pounds of regenerated granular activated carbon from Calgon Carbon. It is advisable to keep at least 8000 pounds of carbon (one filter replacement) on site at all times for emergency replacement. The carbon should arrive at the site the Wednesday afternoon before the carbon replacement date. The truck driver shall call the site 24 hours in advance of arrival.

- Call Wayne Lindell to issue a purchase order for a forklift rental from Hertz Rental Equipment in Tacoma, Washington. Wayne and Hertz have all the information for forklift capacity and model. Schedule the forklift to arrive at the site the Wednesday morning prior to carbon replacement.

- Write up a Services Task Order for the procurement of crane services (Scott's Tree Service). The task order filename and disk location is:

  C:/hicks/wyckoff/taskexp.doc (Microsoft Word document)

  An example of a completed task order is attached to this SOP. The crane should be scheduled to be on site by 9:00 a.m. on Thursday. Make certain that the crane operator signs in and out on the sign-in log. This is our official record for review of invoices from the crane sub-contractor. If there is any other small task (decon grit chamber basket replacement, etc.) this work can also be incorporated into the task order. Get prior approval from Ken Scheffler/CH2M HILL project manager for additional tasks. The completed task order should be E-mailed to Michelle Troy/CH2M HILL in Bellevue as soon as the date of work is determined. The crane sub-contractor is only required to respond within 48 hours (contract terms).

- After the new carbon has been loaded, call Hertz Rental Equipment to pick up the forklift and stop rental charges. Hertz will pick up the forklift at their schedule. The forklift shall be decontaminated and parked in the staging area south of the maintenance building. Do not leave the forklift keys in the ignition overnight.

With all of the purchase orders that must be issued and equipment to be brought to the site, the supervisor must communicate with Wayne Lindell and Michelle Troy concerning the delivery of the equipment and materials. Cost over-runs can be avoided if effective communication is maintained.

Unloading Spent Carbon

The procedures for unloading spent carbon is as follows:

- Isolate the carbon vessel as described in Section 1. At this point, all valves are closed and the vessel is full of water.

- Connect a 2" discharge hose to the carbon unloading valve assembly located on the bottom of the vessel.

- Route the 2" hose to the spent carbon tank (either T-407 or a rented poly tank). Make certain the end of the discharge hose is securely tied-off to the tank.

- Open the carbon unload valve.

- Pressurize the carbon tank to by opening the air inlet valve at the carbon vessel.
- Water from the T-303 effluent tank may be added to the carbon vessel to fluidize the spent carbon. NOTE: CAREFULLY MONITOR THE PRESSURE ON THE CARBON VESSEL. DO NOT ALLOW THE VESSEL TO PRESSURIZE OVER 40 PSI.
- The carbon will "cone" in the tank, allowing only air to be discharged through the hose. Shut off the air and allow the tank to de-pressurize.
- After making certain the carbon vessel is totally de-pressurized, open the side manway hatch.
- Remove the top fill hatch from the top of the carbon vessel.
- Connect the slurry water tee assembly to the portable air diaphragm pump inlet.
- Connect the 2" suction hose between the slurry water tee assembly to the unloading port at the bottom of the vessel.
- Connect the 2" discharge hose from the portable air diaphragm pump discharge to the spent carbon tank.
- Open the plant water valve that feeds water to the slurry tee about half-way.
- Turn on the air to the diaphragm pump, where the pump strokes about once per second.
- Wash out the carbon vessel with T-303 effluent through the use of a 1 1/2" fire hose connected to the fire hose fitting in the backwash piping. The fire hose fitting is located on the pipe rack between the T-303 carbon vessel and T-105.
- Seal the side manway hatch on the carbon vessel. The top fill hatch does not need to be replaced until new carbon is loaded.
- The bottom valve on the spent carbon tank shall be opened slightly to allow free water to trickle out of the tank.
- The treatment pad shall be cleaned of spent carbon and washed down with potable plant water.

Loading New Carbon

The loading of new carbon into the empty carbon filter requires the efforts of one operator and the crane sub-contractor. The hazard involve with this process is encountered when the carbon sack, weighing 1000 pounds, is lifted overhead to get in position to unload into the vessel. The following steps must be adhered to:

- Protective equipment involved with overhead hazards must be used by everyone in the immediate area (within 75 feet of the crane truck).
- The operator will unload the carbon and direct the crane operator with pre-determined hand signals.
- The operator will also assist the crane operator with securing the carbon bags to the crane and removing empty carbon bags from the crane hook. The crane operator shall carry a cell phone to make emergency calls if necessary. Any unusual or emergency situation will be reported to the site supervisor.
- A full bag of carbon shall never be allowed to be suspended above any personnel.

The procedures for loading new carbon into the carbon vessel are as follows:

- Close all valves on the carbon vessel to be loaded.
- Open the carbon vessel vent valve and remove the fill hatch from the top of the carbon vessel.
- Fill the carbon vessel half-full using clean effluent water from tank T-303. Open valve V-303-A1 (located at the bottom of tank T-303) and open valve V-206-D (located at the discharge of P-206) and turn on pump P-206. Open valve "T" on the vessel to be loaded to fill with clean effluent. Close the valves and turn off the pump when the vessel is half-full of clean effluent.
- Secure the crane hook to a full bag of carbon with the crane operator's lifting strap (OMI operator). The OMI operator is responsible for checking that the full carbon bag is secure to the crane hook.
- The crane operator shall lift the bag and set onto the carbon loading support structure.
- The OMI operator shall un-tie the bag sock and unload the bag of carbon.

- The crane operator shall remove the empty bag to ground level where the OMI operator will remove the empty bag from the crane hook and secure the crane hook to another full bag of carbon.
- The process is repeated until all eight bags of new carbon are loaded into the vessel.
- Close the top fill hatch.
- Backwash the carbon "fines" using the procedures outlined in Section 2. When the tank is full of water (water will start to drain out of the top vent pipe), close the vent valve. When the backwash water clears, stop the backwash and put the carbon vessel on-line in the LAG 2 sequence.

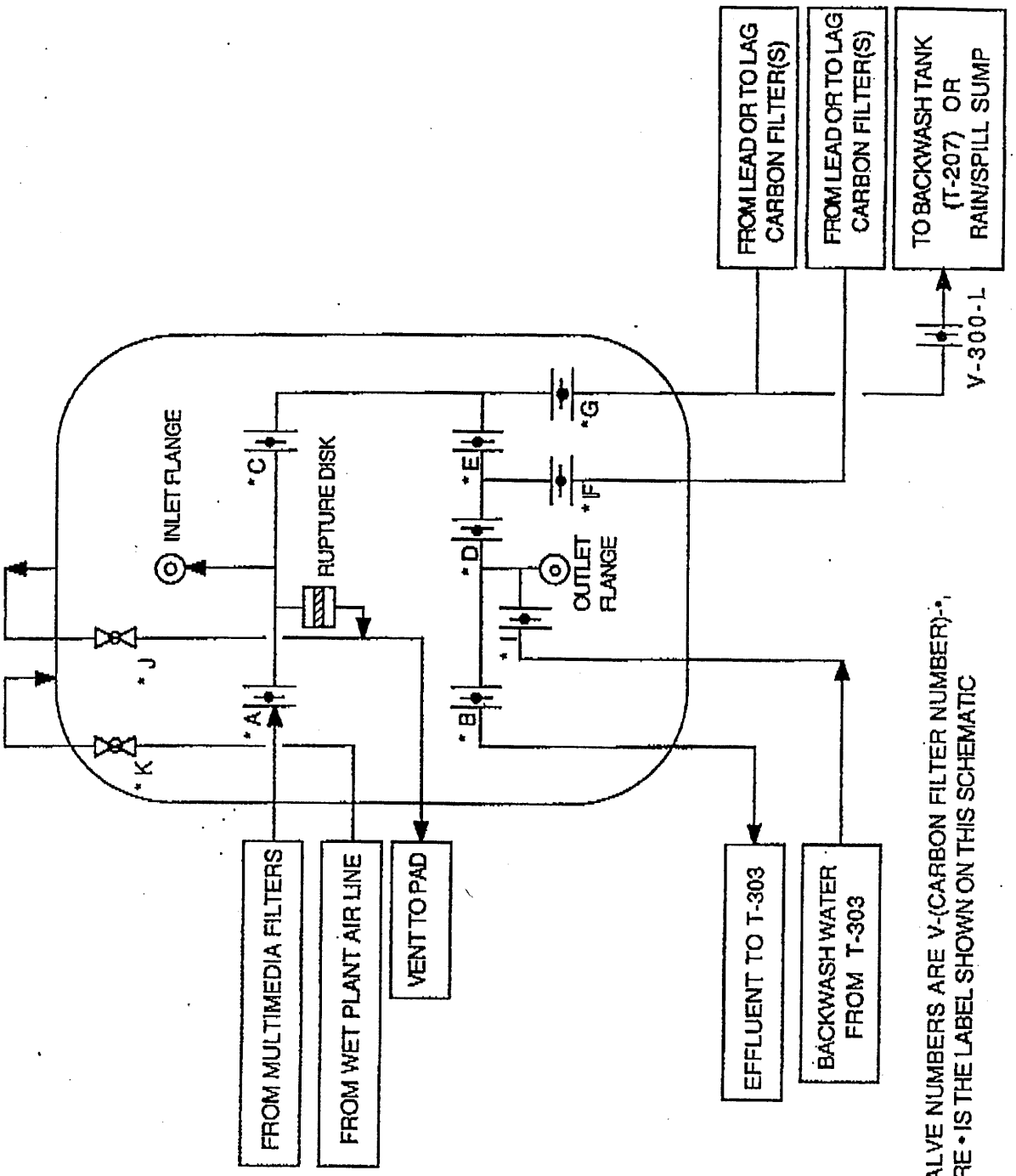

NOTE: (*) VALVE NUMBERS ARE V-(CARBON FILTER NUMBER)-*, WHERE * IS THE LABEL SHOWN ON THIS SCHEMATIC

CARBON FILTER PIPING SCHEMATIC (SHEET 1 of 2)

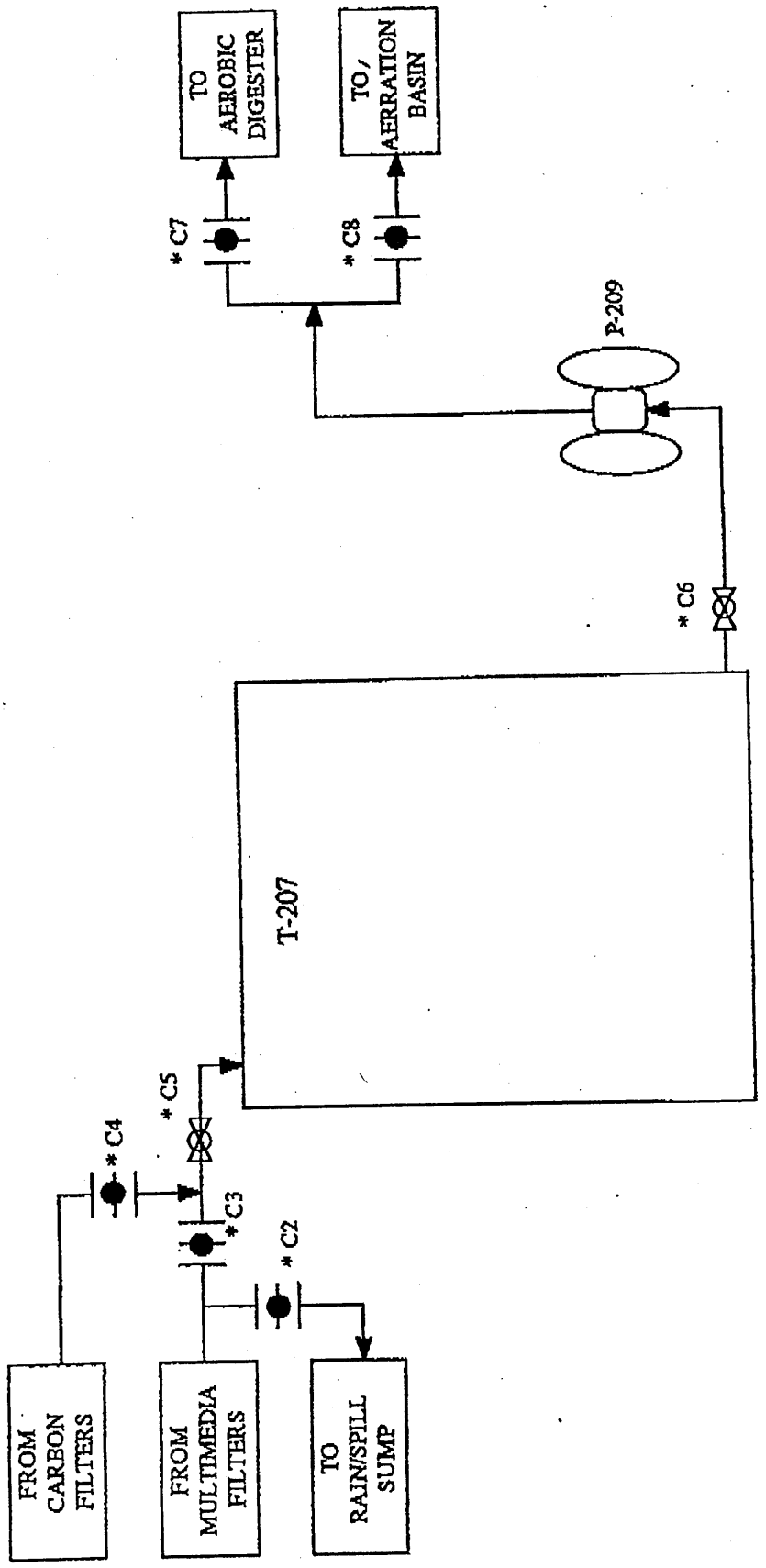

NOTE: (*) VALVE NUMBERS ARE V-206-*, WHERE * IS THE LABEL SHOWN ON THIS SCHEMATIC

BACKWASH TANK PIPING SCHEMATIC
(SHEET 2 of 2)

SECTION 1
Carbon Filter Valve Arrangement Procedures

The attached schematic shows the typical valve schematic for a carbon vessel. The valve manifold design is exactly the same for all of the carbon vessels. There are several important operational tips that shall be followed when rearranging the valve setup:

- The biofilter pumps shall be turned off before valves are turned. The operator needs to be aware of the level in the biofilter (T-205) so that this unit does not overflow in the time required to make the carbon valving changes.

- The actual valving arrangements shall be at least double-checked against the valve arrangements described in this SOP. An improperly operated valve could over-pressurize the carbon system and break a rupture disk, or in the worst case, could bypass the tertiary treatment system and be directly discharged to Eagle Harbor.

- A filter that has been operating as the lead carbon filter (first in series) shall NEVER be used as a lag filter unless the carbon is replaced. Similarly, with three filters on-line in series, a middle carbon filter shall never be valved as the last carbon filter once secondary effluent is routed through the system. This will ensure that the "freshest" carbon is always in the last filter in series.

Carbon valve arrangements are as follows:

T-300 to T-301 to T-302

Tank T-300 open valves: V-300-A, V-300-D, V-300-E, and V-300-G
Tank T-301 open valves: V-301-C, V-301-D, V-301-F, and V-301-G
Tank T-302 open valves: V-302-B, V-302-C, V-302-E, and V-302-F

T-300 to T-302 to T-301

Tank T-300 open valves: V-300-A, V-300-D, V-300-E, and V-300-G
Tank T-301 open valves: V-301-B, V-301-C, V-301-E, and V-301-F
Tank T-302 open valves: V-302-C, V-302-D, V-302-F, and V-302-G

T-301 to T-300 to T-302

Tank T-300 open valves: V-300-C, V-300-D, V-300-F, and V-300-G
Tank T-301 open valves: V-301-A, V-301-D, V-301-E, and V-301-G
Tank T-302 open valves: V-302-B, V-302-C, V-302-E, and V-302-F

Activated Carbon Vessels T-300, T-301, and T-302

STANDARD OPERATING PROCEDURES

This standard operating procedure (SOP) gives the operational for the three granular activated carbon vessels, T-300, T-301, and T-302, at the Wyckoff groundwater treatment plant. This SOP is arranged in three sections to cover normal operation valve arrangements, backwashing a carbon filter, and load/unload procedures.

The activated carbon vessels are original equipment purchased in 1991 by the Wyckoff company, and the vessels are used to polish secondary treated groundwater, specifically to remove residual PAH and PCP before discharge to Eagle Harbor. The original design of the tertiary treatment system intended to use T-302 as an oil adsorption vessel, which was filled with Kleensorb (a clay-based adsorbent). The Wyckoff company abandoned the use of Kleensorb because of disposal regulations and operational problems. T-300 and T-301 were filled with activated carbon and operated in series (lead-lag). The original piping design did not allow T-302 to be operated as a lag filter.

CH2M HILL redesigned the piping system whereby any of the three vessels could be operated as a lead or a lag vessel. In addition, the design allows for all three carbon vessels to be operated in series. This SOP was developed to accommodate the new piping system.

T-301 to T-302 (T-300 off line)

Tank T-300 open valves: ALL VALVES CLOSED
Tank T-301 open valves: V-301-A, V-301-D, and V-301-F
Tank T-302 open valves: V-302-B, V-302-C, V-302-E, and V-302-F

T-302 to T-300 (T-301 off line)

Tank T-300 open valves: V-300-B, V-300-C, V-300-E, and V-300-F
Tank T-301 open valves: ALL VALVES CLOSED
Tank T-302 open valves: V-302-A, V-302-D, and V-302-F

T-302 to T-301 (T-300 off line)

Tank T-300 open valves: ALL VALVES CLOSED
Tank T-301 open valves: V-302-B, V-302-C, V-301-E, and V-302-F
Tank T-302 open valves: V-301-A, V-301-D, and V-301-F

T-301 to T-302 to T-300

Tank T-300 open valves: V-300-B, V-300-C, V-300-E, and V-300-F
Tank T-301 open valves: V-301-A, V-301-D, V-301-E, and V-301-G
Tank T-302 open valves: V-302-C, V-302-D, V-302-F, and V-302-G

T-302 to T-301 to T-300

Tank T-300 open valves: V-300-B, V-300-C, V-300-E, and V-300-F
Tank T-301 open valves: V-301-C, V-301-D, V-301-F, and V-301-G
Tank T-302 open valves: V-302-A, V-302-D, V-302-E, and V-302-G

T-302 to T-300 to T-301

Tank T-300 open valves: V-300-C, V-300-D, V-300-F, and V-300-G
Tank T-301 open valves: V-301-B, V-301-C, V-301-E, and V-301-F
Tank T-302 open valves: V-302-A, V-302-D, V-302-E, and V-302-G

T-300 to T-301 (T-302 off line)

Tank T-300 open valves: V-300-A, V-300-D, and V-300-F
Tank T-301 open valves: V-301-B, V-301-C, V-301-E, and V-301-F
Tank T-302 open valves: ALL VALVES CLOSED

T-300 to T-302 (T-301 off line)

Tank T-300 open valves: V-300-A, V-300-D, and V-300-F
Tank T-301 open valves: ALL VALVES CLOSED
Tank T-302 open valves: V-302-B, V-302-C, V-302-E, and V-302-F

T-301 to T-300 (T-302 off line)

Tank T-300 open valves: V-300-B, V-300-C, V-300-E, and V-300-F
Tank T-301 open valves: V-301-A, V-301-D, and V-301-F
Tank T-302 open valves: ALL VALVES CLOSED

FILTER PRESS
Standard Operating Procedure

OVERVIEW

This Standard Operating Procedure (SOP) has been developed to famillarize OMI associates with the proper operation of the Atlantes Chemical Systems Plate Filter Press.

The primary objective of dewatering is to reduce sludge moisture and consequently sludge volume to a degree that will allow for economical disposal.

The Atlantes Chemical Systems Plate and Frame Filter Press operates in a batch manner and consists of vertical plates which are held rigidly in a frame and pressed together. Conditioned Digester Sludge is fed into the press through feed holes along the length of the press. A filter cloth is mounted on the face of each individual plate. As filtration proceeds, water (filtrate) passes through the fibers of the cloth, is collected in drainage ports provided at the bottom of each press chamber and is discharged to the Filtrate Collection Tank. Sludge solids are retained on the filter cloths and are allowed to build up until the cavities between the plates are completely filled with solids (cake). As the cake builds up between the plates the resistance to flow increases because the water has to pass through a thicker layer of compacted solids. As the cake builds up and resistance increases, the volume of sludge fed to the filter and consequently the volume of filtrate decreases. When the filtrate flow is near zero, and the pump is near 18 seconds between strokes, the feed is shut off and the plates are disengaged. As the plates are pulled away from each other, the retained cakes are discharged by gravity and fall into a hopper.

Press Controls and Valves:

A filter press control panel is mounted on the Tail Stock and includes the following.

- Hydraulic Pressure Gauge.
- Four way (open, off, close, and clamp) valve to control the hydraulic cylinder.

The filter Head Stock includes the following Valves and Air Pressure Regulator.

- Filter Centerfeed Valve. Conditioned sludge is pumped through Filter Centerfeed Valve to filter membranes.

- Filtrate Discharge Valves. The filtrate passes through the membrane and is directed by channels in the plates through the four Filtrate Discharge Valves to a filtrate collection tank.

- Air Blowdown Manifold. The Air Blowdown Manifold, and Air Pressure Regulator are utilized to purge the filter cake of excess water. The Filtrate Discharge Valves and Piping are provided to blow air into the press prior to opening the press.

Filter Plate Press Operation:

The procedure for operating the Filter Plate Press is as folows:

STEP 1: Turn the Hydraulic Valve to Close. Turn the air on to the hydraulic pump. The cylinder will push the filter plates forward.

STEP 2: After the press has closed, turn the Hydraulic Valve to Clamp. Allow the hydraulic pressure to build to a maximum of 4000 psi.

STEP 3: Open the Filter Centerfeed Valve and the four Filtrate Discharge Valves.

STEP 4: Open valve to the Filtrate Collection Tank.

STEP 5: Place a 55 Gallon Drum under Sludge Hopper of the Plate Press.

Sludge Storage Tank and Sludge Feed Pump:

STEP 1: Fill Sludge Storage Tank with will mixed Digester Sludge, with a concentration between 40,000 mg/l to 45,000 mg/l.

STEP 2: Turn on portable Mixer.

STEP 3: Condition Digester Sludge to a pH of 11.5 with Lime.

STEP 4: Connect hose from Sludge Storage Tank to the suction side of the Sludge Feed Pump.

STEP 5: Connect hose from the discharge side of the Sludge Feed Pump to the Inlet Piping to the Filter Plate Press.

STEP 6: Open Sludge Storage Tank Discharge Valve.

STEP 7: Open Sludge Piping Inlet Valve.

STEP 8: Connect Air Regulator and Air Supply Hose to the Sludge Feed Pump. Start Sludge Feed Pump at 25 psi.
By filling the press at low pressure, the solids have a chance to coat the chambers evenly, without blinding the cloths.

STEP 9: As the press fills with sludge, you will notice a decrease in filtrate leaving the press, and slowing down of the Sludge Feed Pump. Increase the Sludge Feed Pump to maintain a clear flow of filtrate from the Plate Press.

Note: The overall cycle time is very dependent upon the concentration of the inlet sludge. Higher concentrations reduce the cycle time. Typical cycle time is about four hours.

STEP 10: The cycle is usually complete when the Sludge Feed Pump is operating at about 80 psi, with a count of fifteen to eighteen seconds between strokes.

STEP 11: Stop Sludge Feed Pump, and drain excess pressure off system.(Drain Valve found next to PolyBlend.)

STEP 12: Close Discharge Valve from Sludge Storage Tank, and Inlet Piping Valve to the Filter Plate Press. (Inlet Piping Valve is located next to Digester.)

Air Blow Down Sequence:

STEP 1: Close Filter Centerfeed Valve, and the 4 Filtrate Discharge Valves.

STEP 2: Open one Filtrate Discharge Valve, and the air valve on the blow down stand pipe.

STEP 3: When free water is no longer being discharged, open the second Filtrate Discharge Valve, and close first Filtrate Discharge Valve.

STEP 4: Continue this process until all free water has been discharged from all four Filtrate Discharge Valves..

STEP 5: Close air valve.

STEP 6: Close all Filtrate Discharge Valves.

Open Filter Press:

STEP 1: Be sure the liquid and air inlet valves are closed.

STEP 2: Turn the hydraulic valve to the open position.

Cake Removal:

STEP 1: Manually separate the plates one at a time.

STEP 2: Pneumatic Plate Spreader: To operate the plate spreader, the filter press must be in the open position. Next, position the spreader arm between the two plate handles which are at the end of the plate stack (toward the hydraulic ram end). Once the spreader arms are in position, pull the actuator lever and the plate spreader arms will lift between the plates then spread the plates apart.

STEP 3: After separating the plates, retract plate spreader by pushing lever toward plate stack, sludge can now be cleaned form plates. Use a non-abrasive nylon or wood paddle to remove any cake that does not fall free.

Cleaning The Filter Press:

STEP 1: Thoroughly clean filter with a brush and soapy water when sludge begins to cake on the plates.

STEP 2: The o-ring sealing surfaces of the gasketed plates should be thoroughly cleaned. Residues left in this area may prevent proper sealing of the plates.

Neutralize Filtrate:

STEP 1: Transfer portable mixer to the Filtrate Collection Tank.

STEP 2: Start Mixer.

STEP 3: Add Muratic Acid until a pH of 7 is maintained in the tank.

STEP 4: Pump neutralized filtrate to the Aeration Tank, or allow it to drain to the sump.

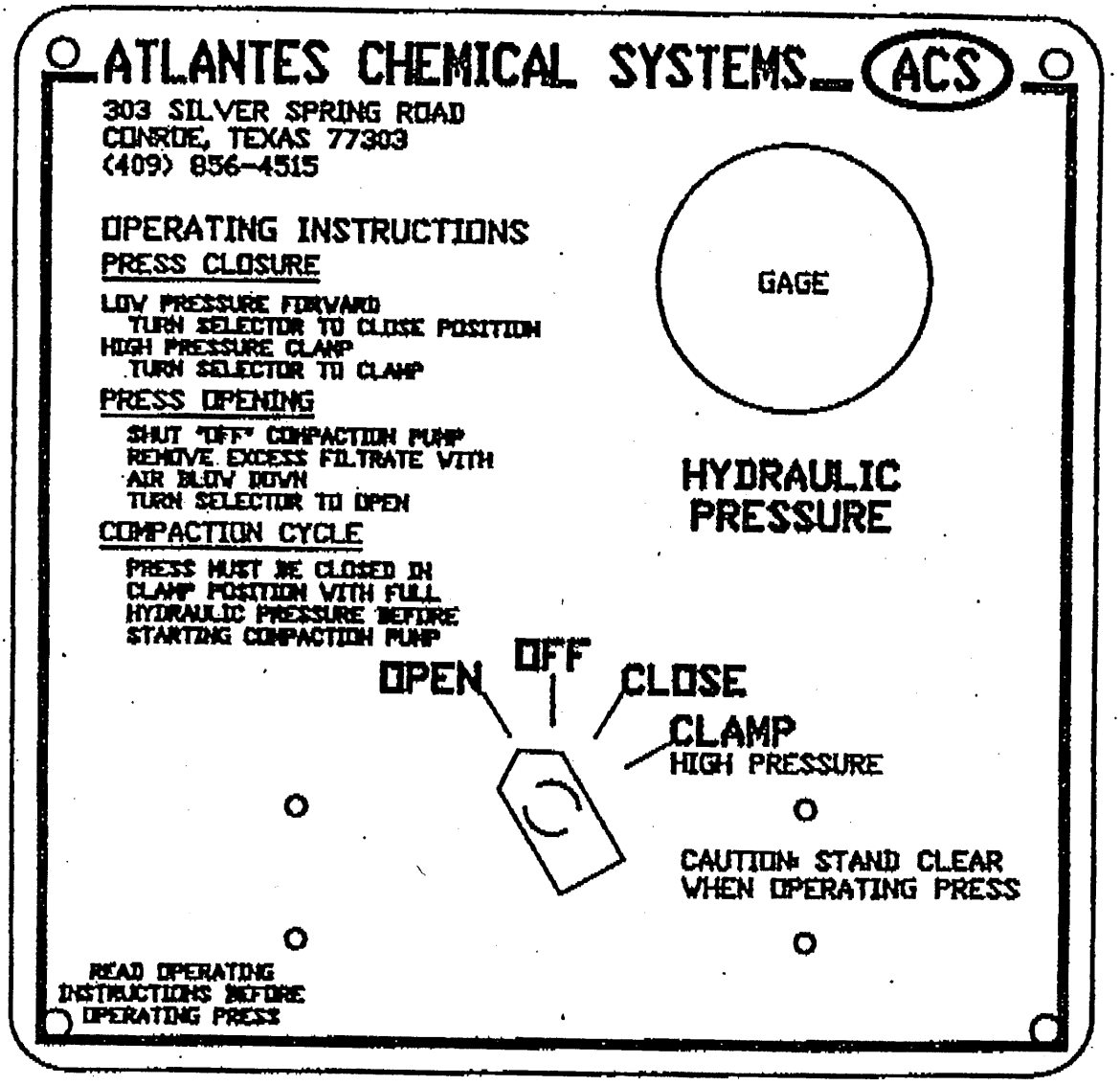

FILTER PRESS FACE PLATE

Multimedia Filter Backwash

STANDARD OPERATING PROCEDURES

The multimedia filters, T-206A and T-206B, must be periodically backwashed to prevent excessive differential pressure drop across the multimedia filters and solids breakthrough which will foul the lead carbon filter. The filters are backwashed with tank T-303 treated effluent. "Dirty" backwash water, which is seen during the first 15 minutes of the backwash cycle, is routed to the backwash tank, T-207. The backwash water is then metered from the backwash tank to the aeration basin through the P-209 air diaphragm pump. The backwash tank is also equipped with a level switch to automatically shut off P-209 when the backwash tank is empty. Forward flush water is routed to the rain/spill sump, where it is pumped by the rainwater sump pumps (P-106A and P-106B) to tank T-401 for retreatment.

The multimedai filters are backwashed at a minimum interval of once per 24 hours. **The multimedia filters must be backwashed if the differential pressure between inlet and outlet exceeds 5 - 7 psi the normal drop for a freshly-cleansed filter.** This SOP assumes that one filter is backwashed at a time. The secondary system influent flowrate is too high to operate one filter at a time, therefore, pumps P-402A (or B) must be turned off to stop flow to the aeration basin and P-205A (or B) must be turned off to stop flow to the multimedia filters

The procedure used to backwash the multimedia filters is as follows (refer to the attached schematic for valve locations and general arrangements):

T-206A Backwash Cycle

- Close the main 1/2" air valve for P-209.
- Shut off pump P-402A (or B) and isolate the pump by closing the appropriate P-402 inlet valve. The inlet valve is closed to prevent T-402 water from entering the aeration basin by gravity.
- Draw the biofilter down by allowing the P-205A (or B) pump to run for approximately 5 minutes in the "AUTO" switch position.
- Turn off P-205A (or B).
- Close valves V-206-A1, V-206-A2, V-206-B1, V-206-B2, and V-206-B7.
- Open valves V-206-A4, V-206-C2, and V-206-C5 (at the backwash tank).

- Open valves V-303-A1 (located at the bottom of tank T-303) and V-206-D (located on the discharge of P-206) to the predetermined % open mark, and turn on pump P-206.
- Slowly open valve V-206-A3 and backwash T-206A for 15 minutes. "Dirty" backwash water is now routed to T-207.
- Check the multimedia backwash flowmeter. Backwash flowrate should be between 90 and 100 gpm (SEE THE ATTACHED BACKWASH FLOW CHART SUPPLIED BY THE MANUFACTURER). Adjust the 2" butterfly valve just upstream of the flow meter, V-206-D, if necessary.
- At the end of the 15 minute backwash cycle, slowly close V-206-A3.
- Close valve V-206-C2 and V-206-A7.
- Open valves V-206-A5 and V-206-A6.
- Slowly open V-206-A3 and forward flush T-206A with clean effluent water for 5 minutes. Flush water is routed to the rain/spill sump.
- Close valves V-206-A3, V-206-A4, V-206-A5, and V-206-A6.

T-206B Backwash Cycle (Assumes T-206B is backwashed immediately after T-206A)

- Open valves V-206-B4 and V-206-C2.
- Slowly open valve V-206-B3 and backwash T-206B for 15 minutes. "Dirty" backwash water is now routed to the T-207.
- At the end of the 15 minute backwash cycle, slowly close valve V-206-B3
- Close valve V-206-C2 and V-206-B7.
- Open valves V-206-B5 and V-206-B6.
- Slowly open valve V-206-B3 and forward flush T-206B with clean effluent water for 5 minutes. Flush water is routed to the rain/spill sump.
- Close valves V-206-B3, V-206-B4, V-206-B5, and V-206-B6.

- Open valves V-206-B1, V-206-B7, V-206-B2, V-206-A1, V-206-A7, and V-206-A2.
- Turn off pump P-206 and close valves V-303-A1 and V-206-D (both located at the P-206 pump).
- Return P-205A (or B) to AUTO position.
- Open the P-402 isolation valve and return P-402A (or B) to AUTO position.
- Check the aeration basin influent flow and the multimedia filter system for proper operation.
- Open V-206-C6 backwash tank discharge valve. Ensure that V-206-C8 is open to the aeration basin.
- Open the main 1/2" air valve for P-209. Backwash water in T-207 is now metered to the aeration basin at approximately 20 gpm.

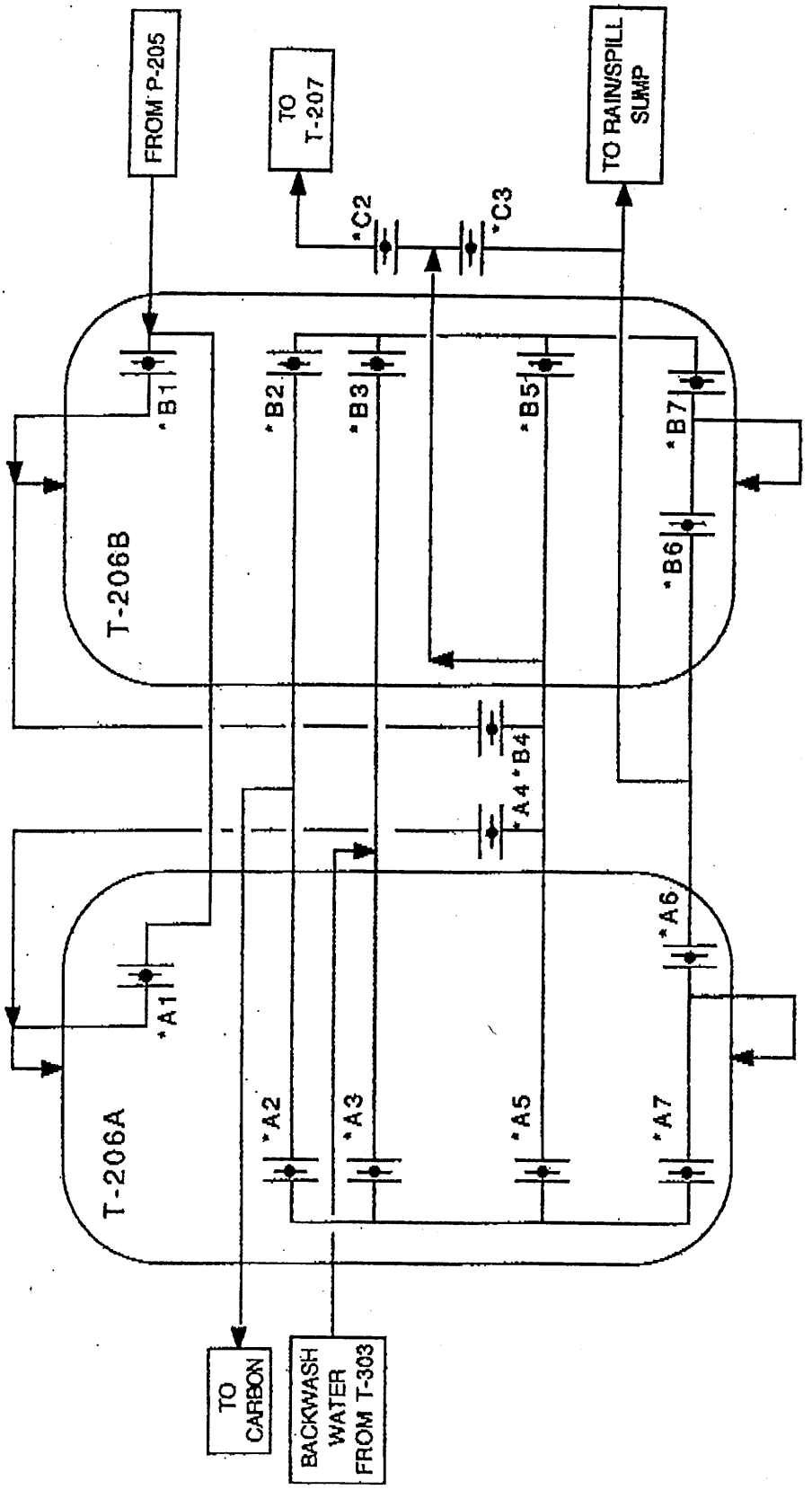

NOTE: (*) VALVE NUMBERS ARE V-206-*, WHERE * IS THE LABEL SHOWN ON THIS SCHEMATIC

MULTIMEDIA FILTER PIPING SCHEMATIC
(SHEET 1 of 2)

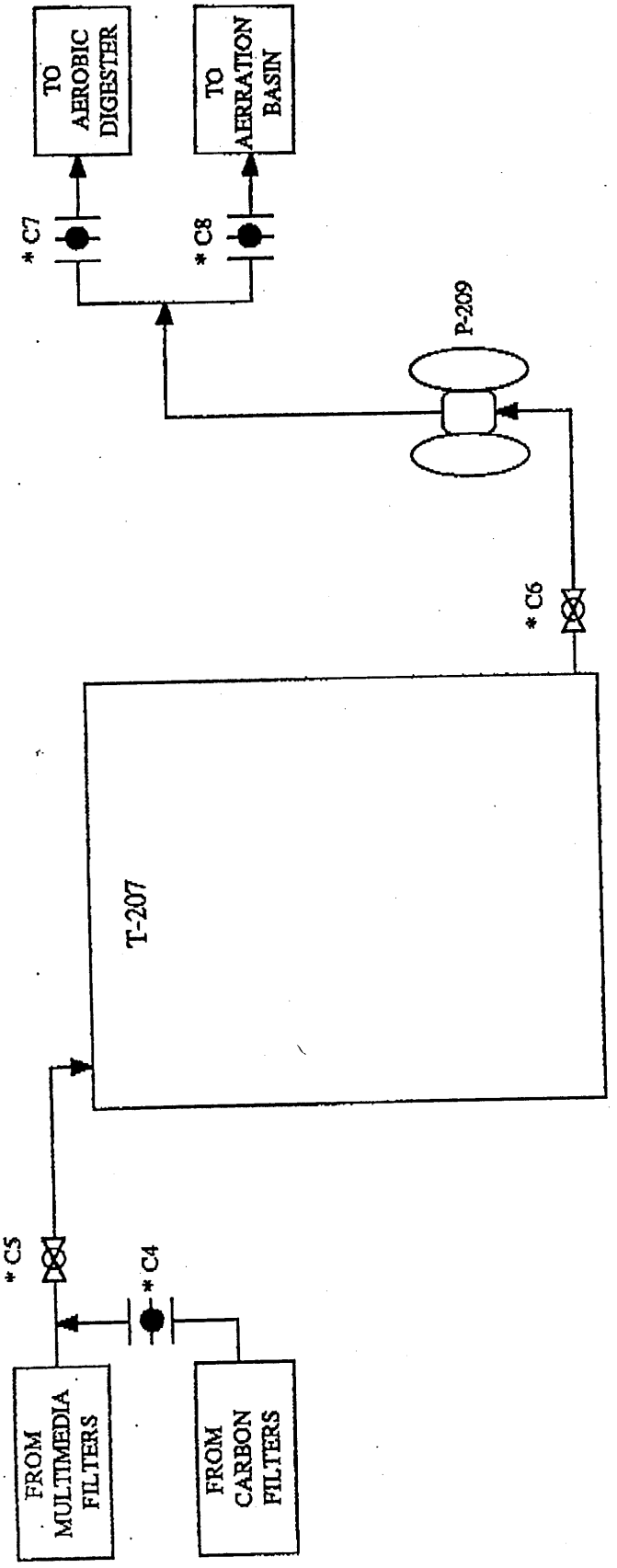

NOTE: (*) VALVE NUMBERS ARE V-206-*, WHERE * IS THE LABEL SHOWN ON THIS SCHEMATIC

BACKWASH TANK PIPING SCHEMATIC
(SHEET 2 of 2)

BACKWASH FLOWRATE DETERMINATION

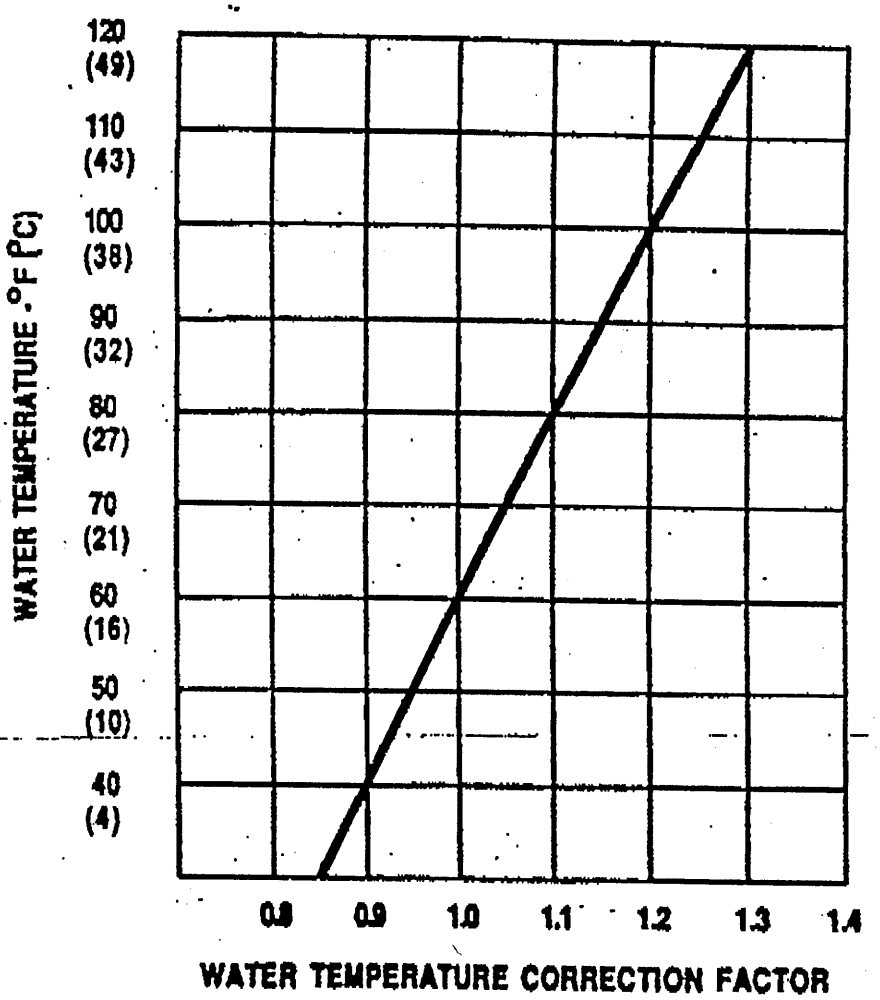

TO OBTAIN NEW FLOWRATE:

MULTIPLY THE DESIGN BACKWASH FLOW BY THE CORRECTION FACTOR THAT CORRESPONDS TO THE PRESENT WATER TEMPERATURE

This page intentionally blank

ATTACHMENT

J6

RECORD OF DECISION

This page intentionally blank

U.S. Environmental Protection Agency
Region 10
Seattle, Washington

Wyckoff/Eagle Harbor Superfund Site Soil and Groundwater Operable Units Bainbridge Island, Washington

RECORD OF DECISION

February 2000

TABLE OF CONTENTS

Section
Page

PART 1: THE DECLARATION 1

PART 2: THE DECISION SUMMARY 5

1. SITE NAME, LOCATION, AND DESCRIPTION 6

2. SITE HISTORY AND ENFORCEMENT ACTIVITIES 6
- 2.1 Site History 6
- 2.2 Investigation and Enforcement History 7
- 2.3 History of Cleanup Actions at the Soil and Groundwater OUs 8

3. COMMUNITY PARTICIPATION 9

4. SCOPE AND ROLE OF OPERABLE UNITS 10

5. SITE CHARACTERISTICS 11
- 5.1 Site Geology 11
- 5.2 Conceptual Site Model 12
- 5.3 Soil Operable Unit 14
- 5.4 Groundwater Operable Unit 15

6. CURRENT AND POTENTIAL FUTURE SITE AND RESOURCE USES 17
- 6.1 Current Land Use 17
- 6.2 Reasonably Anticipated Future Land Uses 17
- 6.3 Reasonably Anticipated Future Resource Uses 18
- 6.4 Groundwater Classification and Basis 18
  - 6.4.1 Upper Aquifer 18
  - 6.4.2 Lower and Deep Aquifers 19
- 6.5 Current Groundwater Use 19

7. SUMMARY OF SITE RISKS 19
- 7.1 Summary of Human Health Risk Assessment 19
- 7.2 Summary of Ecological Risk Assessment 23

8. REMEDIATION OBJECTIVES AND CLEANUP LEVELS 26
- 8.1 Soil Operable Unit Remediation Objectives 26
- 8.2 Groundwater Operable Unit Remediation Objectives 27

TABLE OF CONTENTS
(Continued)

Section
Page

8.3 Key Applicable or Relevant and Appropriate Requirements 27
8.3.1 Soil Operable Unit 28
8.3.2 Groundwater Operable Unit 28
8.4 Cleanup Levels 30
8.4.1 Soil Operable Unit 30
8.4.2 Groundwater Operable Unit 31

9. DESCRIPTION OF ALTERNATIVES 33
9.1 Description of Remedy Components 33
9.2 Common Elements and Distinguishing Features of Each Alternative 34

10. COMPARATIVE ANALYSIS OF ALTERNATIVES 42
10.1 Overall Protection of Human Health and the Environment 42
10.2 Compliance with Applicable or Relevant and Appropriate Requirements (ARARs) 43
10.3 Long-Term Effectiveness and Permanence 43
10.4 Reduction in Toxicity, Mobility, and Volume Through Treatment 44
10.5 Short-Term Effectiveness 45
10.6 Implementability 46
10.7 Cost 47
10.8 State/Tribal Acceptance 47
10.9 Community Acceptance 47

11. PRINCIPAL THREAT WASTE 48

12. SELECTED REMEDY 48
12.1 Selected Remedy for the Soil and Groundwater Operable Units 48
12.2 Expected Outcomes of the Selected Remedy 52
12.3 Issues to be Addressed During the Design Phase of the Selected Remedy 52

13. STATUTORY DETERMINATIONS 57
13.1 Protection of Human Health and the Environment 57
13.2 Compliance with Applicable or Relevant and Appropriate Requirements (ARARs) 58
13.3 Cost-Effectiveness 64
13.4 Utilization of Permanent Solutions and Alternative Treatment (or Resource Recovery) Technologies to the Maximum Extent Practicable 64

13.5 Preference for Treatment as a Principal Element 65

TABLE OF CONTENTS
(Continued)

Section
Page

13.6 Five-Year Review Requirements 65
13.7 Documentation of Significant Changes from Preferred Alternative of Proposed Plan 67

PART 3: RESPONSIVENESS SUMMARY

LIST OF FIGURES

Figure 1 Wyckoff/Eagle Harbor Superfund Site Location

Figure 2 Soil and Groundwater Operable Units Components

Figure 3 Conceptual Model of Contaminant Fate and Transport

Figure 4 Historic Site Map

Figure 5 Groundwater Sampling Locations

Figure 6 Intertidal NAPL Seep Observations on June 4, 1997 (Event No. 4)

Figure 7 Approximate Extent of LNAPL and DNAPL in the Upper Aquifer Groundwater

Figure 8 Delineation of Non-Potable Water in Upper Aquifer

Figure 9 Potential Slurry Wall Alignment

Figure 10 Potential Sheet Pile Wall Alignment (Partial Wall)

Figure 11 Cross Section of Potential Sheet Pile Wall

Figure 12 Conceptual Steam Injection Vapor Cover System

Figure 13 Potential Pilot Study Locations

LIST OF TABLES

Table 1 Summary of Chemicals Detected in the Near-Surface (0-4 feet bgs) Former Process Area and Log Storage/Peeler Area Soil

Table 2 Summary of Chemicals Detected in the Subsurface (5-7 feet bgs) Former Process Area and Log Storage/Peeler Area Soil

Table 3 Summary of Chemicals Detected in the Near-Surface (0-4 feet bgs) Soil in the Vicinity of the Well CW01 Area

Table 4 Summary of Dissolved-Phase Chemicals Detected in Upper-Aquifer Groundwater

Table 5 Summary of Chemicals Detected in Lower-Aquifer Groundwater

Table 6 Summary of Chemicals Detected in LNAPL

Table 7 Summary of Chemicals Detected in DNAPL

Table 8 Reasonable Maximum Exposure Concentrations and Estimated Risk Values for Major Risk Drivers in Soil

Table 9 Reasonable Maximum Exposure Concentrations and Estimated Risk Values for Major Risk Drivers in Groundwater

Table 10 Average Exposure, Maximum Exposure Concentration, and Associated Risk Values for Chemicals of Concern in Soil

Table 11 Maximum Exposure Concentration and Associated Risk Values for Chemicals of Concern in Groundwater

Table 12 Summary of Baseline Risk Adjacent to the Wyckoff Property From 1991 Risk Assessment

Table 13 Groundwater Cleanup Levels for Protection of Human Health and the Marine Environment

Table 14 Soil Cleanup Levels

Table 15 Estimate of Maximum Allowable Pore-Water Concentrations of COCs

Table 16 Alternative 1 - No Action Summary of Present Worth Analysis

LIST OF TABLES
(Continued)

Table 17 Alternative 2a - Containment with Slurry Wall
Summary of Capital Cost Present Worth

Table 18 Alternative 2a - Containment with Slurry Wall
Summary of Present Worth Analysis

Table 19 Alternative 2b - Containment with Sheet Pile Wall
Summary of Capital Cost Present Worth

Table 20 Alternative 2b - Containment with Sheet Pile Wall
Summary of Present Worth Analysis

Table 21 Alternative 3 - Insitu Thermal Remediation
Summary of Capital Cost Present Worth

Table 22 Alternative 3 - Insitu Thermal Remediation
Summary of Present Worth Analysis

Table 23 Alt. 3 with Contingency - Insitu Thermal Remediation and Limited Containment
Summary of Capital Cost Present Worth

Table 24 Alt. 3 with Contingency - Insitu Thermal Remediation and Limited Containment
Summary of Present Worth Analysis

Table 25 Summary of Current Effluent Limitations and Monitoring Requirements with Modifications

LIST OF ACRONYMS AND ABBREVIATIONS

ABC	Association of Bainbridge Communities
ACL	Alternate Concentration Limit
AET	Puget Sound Apparent Effects Threshold
AKART	All Known Available and Reasonable Methods of Treatment
ARAR	Applicable or Relevant and Appropriate Standard
ASILs	Acceptable Source Impact Levels
BA	Biological Assessment
bgs	below ground surface
BNA	base/neutral and acid extractable
CERCLA	Comprehensive Environmental Response, Compensation, and Liability Act
CFR	Code of Federal Regulations
CLARC	Cleanup Levels and Risk Calculations
COC	Contaminant of Concern
RCRA	Resource Recovery and Conservation Act
cy	cubic yards
dB	decibels
DNAPL	Dense Non-Aqueous Phase Liquid
DNR	Washington State Department of Natural Resources
Ecology	Washington State Department of Ecology
EPA	U.S. Environmental Protection Agency
ESB	Ecological Screening Benchmark
FS	Feasibility Study
HEAST	Health Effects Assessment Summary Tables
HHRA	Human Health Risk Assessment
HPAH	High Molecular Weight Polynuclear Aromatic Hydrocarbon
HPO	Hydrous/Pyrolysis/Oxidation
HQ	Hazard Quotient
IRIS	Integrated Risk Information System
LNAPL	Light Non-Aqueous Phase Liquid

LIST OF ACRONYMS AND ABBREVIATIONS
(Continued)

MCL	Maximum Contaminant Level
MCLG	Maximum Contaminant Level Goals
mg/kg	milligrams per kilogram
mg/L	milligrams per liter
MTCA	Model Toxics Control Act
NA	Not Applicable
NAAQS	National Ambient Air Quality Standards
NAPL	Non-Aqueous Phase Liquid
NCP	National Contingency Plan
NESHAP	National Emission Standards for Hazardous Air Pollutants
NOAA	National Oceanic and Atmospheric Administration
NPDES	National Pollution Discharge Elimination System
NPL	National Priorities List
oc	organic carbon
O&M	Operation and Maintenance
OPA	Oil Pollution Act
OU	Operable Unit
PAH	Polynuclear Aromatic Hydrocarbon
PCB	Polychlorinated Biphenyl
PCP	Pentachlorophenol
ppb	parts per billion
ppm	parts per million
PSEP	Puget Sound Estuary Program
PSR	Pacific Sound Resources
PW	Present Worth
RAO	Remedial Action Objective
RCW	Revised Code of Washington
RfD	Reference Dose
RI	Remedial Investigation
RME	Reasonable Maximum Exposure
ROD	Record of Decision
SARA	Superfund Amendments and Reauthorization Act
SMS	Sediment Management Standards
SVE	Soil Vapor Extraction
SW	surface water

LIST OF ACRONYMS AND ABBREVIATIONS
(Continued)

TAG	Technical Assistance Grant
TBC	To Be Considered
TCDD	tetrachlorodizenzo-*p*-dioxin
TDS	total dissolved solids
TEF	Toxicity Equivalency Factor
TOC	total organic carbon
TSDF	Treatment, Storage and Disposal Facility
WAC	Washington Administrative Code
WQS	Water Quality Standards
µg/kg	micrograms per kilogram
µg/L	micrograms per liter

PART 1: THE DECLARATION

SITE NAME AND LOCATION

Wyckoff/Eagle Harbor Superfund Site
Soil and Groundwater Operable Units (OU2 and OU4, respectively)
Bainbridge Island, Kitsap County, Washington
U.S. Environmental Protection Agency Identification Number WAD009248295

STATEMENT OF BASIS AND PURPOSE

This decision document presents the final remedial action selected by the U.S. Environmental Protection Agency (EPA) for the Soil and Groundwater Operable Unit of the Wyckoff/Eagle Harbor Superfund site, Bainbridge Island, Washington.

The remedy was chosen in accordance with the Comprehensive Environmental Response, Compensation, and Liability Act of 1980 (CERCLA), as amended by the Superfund Amendments and Reauthorization Act of 1986 (SARA), and, to the extent practicable, the National Oil and Hazardous Substances Pollution Contingency Plan (NCP). This decision is based on the Administrative Record for this site.

The State of Washington Department of Ecology (Ecology) has participated in scoping the site investigations and in evaluating alternatives for remedial action. Ecology concurs with the selected remedy.

ASSESSMENT OF THE SITE

The response action selected in this Record of Decision is necessary to protect the public health and welfare, and the environment from imminent and substantial endangerment from actual or threatened releases of hazardous substances into the environment.

DESCRIPTION OF THE SELECTED REMEDY

The selected remedy described in this Record of Decision (ROD) addresses contaminated soil and groundwater in the upland portion of the site, two of four operable units at the Wyckoff/Eagle Harbor Superfund site. This is the final Record of Decision to be completed for the site.

The soil and groundwater at the Wyckoff facility is severely contaminated with polynuclear aromatic hydrocarbons, pentachorophenol, and dioxins/furans. The principal threat is defined as soil and groundwater containing free-phase oily contamination. The selected remedy will achieve substantial risk reduction by cutting off the migration pathway with a sheet pile wall and treating the principal threat at the site using thermal technologies.

The following are major components of the Selected Remedy - Thermal Remediation:

- Construct a sheet pile wall around the highly contaminated area of the Former Process Area to prevent potential flow of contaminants to Eagle Harbor during remediation;

- Conduct a pilot study to test the applicability and effectiveness of thermal remediation. The pilot study will be designed and implemented with the ability to expand to the full-scale system. The pilot study will test steam injection and electrical resistance heating (as a supplemental technology to steam injection).

  If the pilot study is successful (Scenario 1) at meeting performance expectations, then:

  -- Consolidate contaminated hot spots from the Former Log Storage/Peeler Area and the well CW01 area (approximately 60,000 cubic yards) within the Former Process Area.

  -- Remediate the soil and groundwater within the Former Process Area by full-scale thermal treatment.

  -- Construct a vapor cover over the treatment area (the Former Process Area) to enhance recovery of contaminated vapors, minimize emissions to the atmosphere, and reduce odors.

  -- Monitor biodegradation, oxidation, and other thermally-enhanced attenuation processes in soil and groundwater during and after active thermal treatment is completed to confirm whether further reductions in contaminant concentrations are being achieved.

- If the pilot is not successful (Scenario 2), then:

  -- Implement the contingency remedy, Containment with a Sheet Pile Wall (Alternative 2b).

- Common elements of Scenarios 1 and 2:

  -- Monitor the upper groundwater aquifer outside of the Former Process Area and the lower aquifer to ensure that contaminant levels are not increasing and for decreasing trends.

  -- Establish institutional controls to:

    ✓ Ensure that the upper aquifer groundwater outside the Former Process

Area and the lower aquifer remain unused until protective levels are reached.

- ✓ Ensure that the upper aquifer groundwater within the Former Process Area remains unused due to contaminants that may remain after thermal treatment or will remain as part of the contingency remedy. This portion of the upper aquifer is also not potable due to high salinity levels.

- ✓ Restrict site use to reduce the risk of direct exposure to surface soil, if necessary.

If successful, Thermal Remediation could provide permanent protection to human health and the environment. This alternative could remove substantially all mobile non-aqueous phase liquids, the principle threat. If successful, this alternative would be a cost-effective and permanent solution to contamination at the Wyckoff Soil and Groundwater Operable Units (OUs).

EPA will be the lead agency for implementing soil and groundwater remediation at the Wyckoff site and will coordinate activities in the uplands with cleanup in the East Harbor.

STATUTORY DETERMINATIONS

The selected remedy is protective of human health and of the marine environment, complies with Federal and State requirements that are applicable or relevant and appropriate to the remedial action, is cost-effective, and utilizes permanent solutions and alternative treatment technologies to the maximum extent practicable. This remedy also uses permanent solutions and satisfies the statutory preference for treatment as a principal element for the two upland operable units (i.e., reduces the toxicity, mobility, or volume of hazardous substances, pollutants, or contaminants as a principal element through treatment).

Because this remedy may result in hazardous substances, pollutants, or contaminants remaining at the site, a statutory review will be conducted within five years after initiation of remedial action to ensure that the remedy is, or will be, protective of human health and the environment.

DATA CERTIFICATION CHECKLIST

The following information is included in the Decision Summary section of this ROD. Additional information can be found in the Administrative Record file for this site.

- Chemicals of concern and their respective concentrations (see Tables 1 through 7)

- Baseline risk represented by the chemicals of concern (See Section 7, Summaries of Human Health and Ecological Risk Assessments)
- Cleanup levels established for chemicals of concern and basis for the levels (see Tables 13

through 15)

- Current and reasonable anticipated future land use assumptions and current and potential future beneficial uses of groundwater used in the baseline risk assessment and ROD (see Section 6, Current and Potential Future Site and Resource Uses)

- Potential land and groundwater use that will be available at the site as a result of the Selected Remedy (see Section 12, Selected Remedy)

- Estimated capital, annual operation and maintenance (O&M), and total present worth costs; discount rate; and the number of years over which the remedy cost estimates are projected (see Tables 16 through 24)

- Key factors that led to selecting the remedy (see Section 10, Comparative Analysis of Alternatives)

AUTHORIZING SIGNATURE

_____ _____

Chuck Clarke
Regional Administrator
U.S. Environmental Protection Agency
Region 10

Date

PART 2: THE DECISION SUMMARY

This Decision Summary provides a description of the site-specific factors and analyses that led to selection of the remedy for the Soil and Groundwater operable units of the Wyckoff/Eagle Harbor Superfund site. It includes information about the site background, the nature and extent of contamination, the assessment of human health and the environmental risks, and the identification and evaluation of remedial alternatives.

The Decision Summary also describes the involvement of the public throughout the process, along with the environmental programs and regulations that may relate to or affect the alternatives. The Decision Summary concludes with a description of the remedy selected in this Record of Decision (ROD) and a discussion of how the selected remedy meets the requirements of the Comprehensive Environmental Response, Compensation, and Liability Act of 1980 (CERCLA), as amended by the Superfund Amendments and Reauthorization Act of 1986 (SARA), and to the extent practicable, the National Contingency Plan (NCP).

The Decision Summary is presented in the following sections:

Section 1 Site Name, Location, and Description
Section 2 Site History and Enforcement Activities
Section 3 Community Participation
Section 4 Scope and Role of Operable Units
Section 5 Site Characteristics
Section 6 Current and Potential Future Site and Resource Uses
Section 7 Summary of Site Risks
Section 8 Remediation Objectives and Cleanup Levels
Section 9 Description of Alternatives
Section 10 Comparative Analysis of Alternatives
Section 11 Principal Threat Waste
Section 12 Selected Remedy
Section 13 Statutory Determinations

Documents supporting this Decision Summary are included in the Adminstrative Record for the Soil and Groundwater operable units. Key documents include the following: the Eagle Harbor Risk Assessment (May 1991); the Remedial Investigation (June 1997); the Feasibility Study (October 1997); the Focused Feasibility Study Comparative Analysis of Containment and Thermal Technologies (April 1999); the Conceptual Design for the Soil and Groundwater Operable Units (September 1999); and the Soil and Groundwater Operable Units Proposed Plan (September 1999).

1. SITE NAME, LOCATION, AND DESCRIPTION

The Wyckoff/Eagle Harbor Superfund site is located on the east side of Bainbridge Island, in central Puget Sound, Washington (Figure 1). The site includes an inactive wood-treating facility, called the Wyckoff facility, contaminated sediments in adjacent Eagle Harbor, and other upland sources of contamination to the harbor, including a former shipyard. The site is currently divided into four operable units (Figure 1).

This Record of Decision (ROD) specifically addresses the contaminated soil and groundwater at the Wyckoff facility. The U.S. Environmental Protection Agency (EPA) is the lead agency for cleanup activities, and the Washington State Department of Ecology (Ecology) is the support agency. Cleanup monies for the Wyckoff facility will come from the Superfund trust fund.

2. SITE HISTORY AND ENFORCEMENT ACTIVITIES

2.1 Site History

From the early 1900s through 1988, a succession of companies treated wood at the Wyckoff property for use as railroad ties and trestles, telephone poles, pilings, docks, and piers. The wood-preserving plant was one of largest in the United States, and its products were sold throughout the nation and the rest of the world. Wood-preserving operations included: (1) the use and storage of creosote, pentachlorophenol, solvents, gasoline, antifreeze, fuel and waste oil, and lubricants; (2) management of process wastes; (3) wastewater treatment and discharge; and (4) storage of treated wood and wood products.

The main features of the wood-treating operation included: (1) a process area which included numerous storage tanks and process vessels such as retorts; (2) a log storage and log peeler area; and (3) a treated log storage area.

There is little historic information about the waste management practices at the Wyckoff facility. Prior to reconstruction of the Wyckoff facility in the 1920s, it is reported that logs were floated in and out of a lagoon that once existed at the site. The lagoon has since been filled. Treated logs were also transported to and from the facility at the former West Dock via a transfer table pit, and the chemical solution that drained from the retorts after a treating cycle went directly on the ground and seeped into the soil and groundwater below the surface. This practice began around the mid-1940s until operations ceased in 1988. Wastewater was also discharged into Eagle Harbor for many years, and the practice of storing treated pilings and timber in the water continued until the late 1940s. The log storage area was primarily used to store untreated wood.

2.2 Investigation and Enforcement History

Due to reports of oil observed on the beach, EPA began investigating the property in 1971. In 1984, EPA issued an order requiring the Wyckoff Company (renamed Pacific Sound Resources after operations ceased in 1988) to conduct environmental investigations. Data collected at the time revealed the presence of significant soil and groundwater contamination. Numerous other investigations were conducted at this site prior to initiation of the RI/FS. The Wyckoff Company, EPA, the Washington Department of Ecology (Ecology), and the National Oceanic and Atmospheric Administration (NOAA) all investigated other aspects of the site in the early to mid-1980s under regulatory authority other than Comprehensive Environmental Response Compensation and Liability Act (CERCLA) authority. While work was conducted under Resource Recovery and Conservation Act (RCRA) authority, the site was not considered a treatment, storage and disposal facility (TSDF).

The site, including Eagle Harbor, the wood-treating facility, and other sources of contamination to Eagle Harbor, was listed on the Superfund National Priorities List (NPL) in July 1987. In July 1988, the Wyckoff Company was ordered by EPA to install groundwater extraction wells and a groundwater treatment plant in an effort to halt continuing release of wood-treating contaminants to Eagle Harbor.

A settlement with the Wyckoff Company was embodied in a Consent Decree entered in Federal District Court in August 1994. The Decree creates the PSR Environmental Trust into which the heirs of the Wyckoff Company founders, owners and operators placed all ownership rights and shares in the Company to allow the Trust to maximize liquidation of all company assets, including nonwood-treating holdings, for the benefit of the environment. The beneficiaries of the Trust are the United States Department of Interior, National Oceanic and Atmospheric Administration (NOAA) of the Department of Commerce, and the Suquamish and Muckleshoot Tribes, as Natural Resource Trustees, as well as EPA (the Superfund trust fund) for reimbursement of CERCLA remedial costs. A memorandum of agreement was entered into by the beneficiaries of the Trust to ensure that settlement proceeds would be applied toward both environmental response and natural resource restoration goals.

The groundwater pump-and-treat systems were put online in 1990. In November 1993, based on an agreement with Wyckoff/PSR principals (see above), EPA assumed control of the site and operation of the systems and discovered that both the treatment plant and extraction systems were in a state of disrepair. Nine new extraction wells were then installed to replace the original seven and a variety of operational and process improvements were made to the treatment system.

The systems have been effective in recovering modest amounts of oily creosote in the form of non-aqueous phase liquid, or NAPL, and in helping to control the migration of contaminants from the groundwater to the Harbor. The extracted groundwater contaminated with elevated levels of polynuclear aromatic hydrocarbons (PAHs) and pentachlorophenol (PCP) is treated at the plant so it can be safely discharged through an outfall to Puget Sound. As of January 2000, the

groundwater extraction and treatment system has recovered approximately 88,700 gallons of NAPL (out of approximately 1 million gallons estimated to be present at the site), and treated over 316 million gallons of contaminated groundwater from the upper-aquifer underlying the Former Process Area. Currently, however, NAPL seeps are still moving out into the marine environment.

Other actions already taken to deal with the contamination include demolition and removal of the buildings, structures, above ground and underground storage tanks, underground foundations and piping, and the removal of asbestos, sludge, and some heavily contaminated soil.

2.3 History of Cleanup Actions at the Soil and Groundwater OUs

In September 1994, EPA issued an interim ROD for groundwater which included the following elements:

- Replacement of the existing treatment plant. The design of a new treatment plant began in late 1996 and was completed in July 1998, but the plant was not constructed pending a final decision regarding the Groundwater OU remedy.

- Evaluation, maintenance, and upgrade of the existing extraction system/hydraulic barrier operations. These activities have been completed.

- Evaluation of the performance of the existing extraction system and installation of a physical barrier, if needed. Because of continued releases to Eagle Harbor and Puget Sound despite ongoing pumping, a slurry wall was proposed as the most appropriate kind of barrier. The designs were put on hold, however, pending a final decision regarding the Groundwater OU remedy.

- Sealing of on-site water supply wells. These activities have been completed.

In November 1997, EPA issued a “final” Proposed Plan for cleanup of soil and groundwater. The components of this proposed plan included: (1) cap the contaminated soil in the “flat” area of the property, (2) excavate contaminated soil from a small area in the hillside portion of the property, and place it in the flat area of the soil cap, (3) implement institutional controls, and (4) monitor groundwater outside the slurry wall to confirm that contaminants will not cause risks and determine whether further action is needed.

At the time this containment strategy was proposed, no other technologies promised to provide a more effective remediation to sites containing dense non-aqueous phase liquids (DNAPL). Unfortunately, the containment strategy has no defined endpoint. The pump-and-treat system would have to be operated and maintained in perpetuity, and replaced every 30 years, in order to maintain the integrity of the containment option and prevent migration of contaminants into Eagle Harbor, or unless an effective and cost-effective treatment technology could be employed. The

projected long-term costs associated with the containment strategy could exceed a hundred millions dollars. These costs were of concern to the Department of Ecology.

Since the original proposal of the containment option, thermal remediation technologies have developed rapidly. Favorable results from thermal remediation of a former wood-treatment site similar to Wyckoff, located in Visalia, California, prompted EPA to delay selection of a final cleanup remedy to further evaluate thermal technologies for possible application at Wyckoff.

In late 1998, EPA Region 10 and the Technology Innovation Office at EPA Headquarters assembled a group of prominent researchers and industry experts in the field of thermal remediation of NAPL contamination, to provide oversight and consultation for the thermal technologies evaluation at the Wyckoff site. This group has become known as the In-Situ Thermal Technologies Advisory Panel, or ITTAP. EPA met with ITTAP members several times in 1999 to discuss and obtain expert feedback regarding the effectiveness, feasibility, and implementability of thermal remediation. Based on the results of various studies, site demonstrations, and the results of the Wyckoff laboratory studies, the ITTAP fully supports using thermal technologies at this site to remove the contamination.

In September 1999, EPA issued a second Proposed Plan for the Wyckoff Soil and Groundwater OUs. That Proposed Plan replaced the November 1997 Proposed Plan and presented a change in the cleanup strategy. In that plan, EPA's preferred remedy (now the selected cleanup remedy) focused on an innovative thermal technology, called steam injection (and if necessary, electrical resistance heating) to actively remove contaminants from the site's soil and groundwater. The pilot study that will be conducted at Wyckoff is of national interest and will provide valuable information that can be used at many other sites.

3. COMMUNITY PARTICIPATION

A 30-day public comment period was held for the November 1997 Proposed Plan (see above) from November 20 to December 20, 1997.

The RI/FS report for the Soil and Groundwater operable units of the Wyckoff/Eagle Harbor Superfund site was made available to the public in October 1997 and the Focused Feasibility Study and second Proposed Plan were made available for public review in September 1999. These documents can be found in the Administrative Record file and the information repository maintained at the EPA Records Center in Region 10 and at the Bainbridge Island Public Library. The notice of the availability of the Proposed Plan was published in the Daily Journal of Commerce, the Bremerton Sun, the Bainbridge Island Review, and the Seattle Times at the end of September 1999.

A public comment period for the Proposed Plan was held from October 4 to November 2, 1999. An extension to the public comment period was requested. As a result, it was extended to December 2, 1999. In addition, an Availability Session and Public Meeting were held on October

21, 1999. The purpose of the Availability Session was to provide an informal opportunity for community members to meet with project representatives. The purpose of the Public Meeting was to present the Proposed Plan to a broader community audience than those that had already been involved at the site and to take formal public comments. At this meeting, representatives from EPA answered questions about problems at the site and the remedial alternatives. EPA's response to the comments received during this period is included in the Responsiveness Summary, which is part of this Record of Decision.

The Association of Bainbridge Communities (ABC) is a citizen's group representing residents from all parts of Bainbridge Island. During over fifteen years of its existence, ABC has continually stressed publicizing issues that deal with the environment on the island. ABC has published a quarterly newsletter called Scotch Broom since 1980. This newsletter contains articles informing Bainbridge citizens about land-use and environmental issues on Bainbridge Island. To promote local citizen involvement in decision-making at the Wyckoff/Eagle Harbor site, EPA awarded $50,000 to ABC under the Technical Assistance Grant (TAG) program in 1988. An additional $50,000 was awarded in 1993. Another $25,000 has been awarded recently. ABC members, as well as other Bainbridge Island citizens, remain active and informed about all aspects of site cleanup activities.

Local public interest in this site is very high. Community input is vital to the success of this project, and EPA seeks broad public involvement throughout the process. Other EPA community involvement initiatives include preparing fact sheets and press releases to keep the community informed, offering opportunities for direct public input at critical junctures, meeting with individuals and groups on a regular basis and/or as requested, and generally being responsive to questions, suggestions, and issues raised by members of the public.

4. SCOPE AND ROLE OF OPERABLE UNITS

As with many Superfund sites, the problems at the Wyckoff/Eagle Harbor site are complex. As a result, EPA has organized the work into four operable units (OUs) (Figure 1):

- Operable Unit 1: The East Harbor OU (PAH contaminated subtidal and intertidal sediments in Eagle Harbor)
- Operable Unit 2: The Wyckoff Soil OU (PAH, PCP, and dioxins/furans contaminated unsaturated soil)
- Operable Unit 3: The West Harbor OU (metals, primarily mercury, contaminated subtidal and intertidal sediments in Eagle Harbor, and upland sources)
- Operable Unit 4: The Wyckoff Groundwater OU (the saturated soil and groundwater beneath the Soil OU)

Remedies have already been selected for the West and East Harbor portions of the Wyckoff/Eagle Harbor Superfund Site in RODs dated September 1992 (amended in December 1995) and September 1994, respectively. These remedies are not included in this Record of Decision. Caps have been placed over contaminated marine sediments in both areas, heavily contaminated sediments were removed from the West Harbor, and monitoring mechanisms are in place. As stated in the September 1994 ROD, additional capping will be required in the East Harbor after source control at the Wyckoff site has been implemented. Source control, or control of ongoing migration of contaminants with groundwater at the Wyckoff site, is necessary to prevent recontamination of the East Harbor cap.

This Soil and Groundwater OU ROD contains the final cleanup actions for this site. This ROD does two things:

- Presents the final selected remedy for cleanup of both operable units.

- Explains how the selected cleanup remedy will protect human health and the environment by removing NAPL sources, reducing exposure, controlling contaminant releases, and protecting potential drinking water sources and aquatic resources in Eagle Harbor.

5. SITE CHARACTERISTICS

This section summarizes information obtained as part of the Remedial Investigation/Feasibility Study (RI/FS) activities at the Soil and Groundwater OUs. It includes a description of the conceptual site model on which all investigations, the risk assessment, and response actions are based. In addition, this section presents sources of contamination, sampling strategies, and documented types of contamination.

5.1 Site Geology

Figure 2 illustrates the relationship between the different components of the Soil OU and the Groundwater OU. The site geology can be characterized as:

- The vadose (or unsaturated) zone soil
- The unconfined upper aquifer
- The low-permeability confining layer, or aquitard
- The semi-confined lower aquifer
- The deep aquifers

The vadose (unsaturated) zone immediately below the surface of the Wyckoff Soil OU is 5 to 10 feet thick and consists of fill and native materials composed of discontinuous silt and fine sand layers.

The unconfined upper aquifer underlying the vadose zone soil is composed of fill and native

materials from 5 to 10 feet in thickness, overlying marine sand containing small amounts of interbedded gravel, silt, and clay. This marine sand layer extends down another 5 to 70 feet below ground surface. The depth to water is strongly influenced by the tides. The maximum elevation of the water level within this aquifer defines the upper boundary of the Groundwater OU.

Separating the upper aquifer from the lower semi-confined aquifer is a relatively impermeable hard layer of marine silt and glacial till, also called the aquitard. The aquitard underlies all of the Former Process Area at the Wyckoff property. The top of this aquitard extends from near ground surface in the south-central part of the site to approximately 75 feet bgs along the northern portion of the site. Based on numerous field explorations during the RI and the Corps of Engineers exploratory drilling events in 1997 and 1999, it appears that the aquitard is continuous throughout the site. Its thickness ranges from 10 to 40 feet, with the thinnest area (10 feet) localized near the northeast corner of the site.

Underlying the aquitard is a semi-confined lower aquifer, which consists primarily of sand, with small amounts of silt, clay, and gravel. The lower boundary of this aquifer has not been completely determined, however, it is believed that this aquifer ends at approximately 200 feet bgs. Also, limited data from deeper well logs at the property indicate that there are at least two additional clay layers that may act as confining units between this semi-confined aquifer and even deeper aquifers.

The deep aquifers are located from approximately 200 to 1,500 feet bgs. These aquifers are potable and were used in the past by the Wyckoff Company to provide water for on-site operations with excess sent to nearby residents to be used for drinking water purposes. Due to environmental concerns that these water production wells may introduce contaminants to the deep aquifer systems, EPA sealed and abandoned them in 1995 as part of the Interim Groundwater action (see Section 2.3, above).

5.2 Conceptual Site Model

The conceptual site model depicting contaminant migration for the Soil and Groundwater Operable Units of the Wyckoff facility is presented in Figure 3. The primary source of contamination was the daily operation of the wood-treating facility including leaks, spills, and other releases of wood-treating contaminants into the ground, and storage of wood-treatment products.

As the spills and leaks occurred, the contaminants moved as a mobile NAPL phase in the vadose zone, adsorbing onto soil, volatilizing into soil gas, and dissolving into pore water. Except for the volatilization pathway, similar partitioning occurs below the water table. PAHs comprise a large portion of the NAPL and many of the PAHs exhibit very low aqueous solubilities and are strongly adsorbed to particulate surfaces. Volatilization is a dominant release mechanism for the lower-molecular-weigh PAHs with higher vapor pressures. Mobile NAPL migrates downward through

the vadose zone until it reaches the water table. Phase separation occurs when NAPL encounters the water table, and light non-aqueous phase liquid (LNAPL) and dense non-aqueous phase liquid (DNAPL) continue to migrate along multiple pathways:

- LNAPL accumulates at the water-table surface and continues to migrate laterally, eventually emerging as intertidal seeps in Eagle Harbor and Puget Sound.

- DNAPL continues migrating downward. Lateral movement may occur through high-permeability gravel and cobble zones, or during temporary accumulation on fine-grained layers in the aquifer.

- In shoreline areas, downward migration of some DNAPL may be slowed or halted as it encounters brackish groundwater with approximately the same density.

- Along the northwest shoreline, DNAPL appears to be perched on clay and silt beds within the upper aquifer, and has been observed to move laterally through the bulkheads, discharging into the Log Rafting Area (Figure 4). This discharge appears to have been occurring for several decades, contemporaneously with sedimentation; the result is several feet of NAPL-saturated harbor-bottom sediments in the Log Rafting Area. The discharge has been reduced by the installation of a ninth extraction well in 1998 (PW09).

- DNAPL entered the lagoon which extended from the Log Rafting Area into the Tram Loading Area, either from the upper aquifer, from surface discharges, or from treated logs placed in the lagoon. This discharge was apparently contemporaneous with sedimentation and filling, resulting in as much as 10 feet of NAPL-saturated soil at the bottom of the old lagoon, now covered with clay fill.

- Most of the DNAPL migrates downward through the upper aquifer until it encounters the relatively low-permeability aquitard layer. The aquitard layer dips toward the north and east. The DNAPL builds up above the aquitard, forming large accumulations in depressions in the aquitard, and generally migrating down-dip toward Eagle Harbor.

- Small amounts of the DNAPL continue to migrate farther downward into fractures or sandy zones in the aquitard. Data from the current explorations indicate that continued downward migration of DNAPL occurs primarily in the central portion of the site (near the vicinity of well CW12, Figure 5), where the aquitard contains numerous sand beds and lenses.

- Based on the data collected to date, it appears that NAPL has not reached the lower aquifer.

NAPL undergoes dissolution as it encounters groundwater in the upper aquifer, resulting in dissolved contamination. The aqueous-phase contaminants are then transported with the groundwater flow, laterally toward Eagle Harbor. Downward advective transport of dissolved contaminants through the aquitard is unlikely under natural conditions, since the hydraulic head is

higher in the lower aquifer than in the upper aquifer.

Transport of contaminants into the lower aquifer may occur through the following mechanisms:

- Small amounts of DNAPL seepage through fractures and sand zones in the aquitard.
- Transport by molecular diffusion from DNAPL-contaminated zones near the base of the aquitard.
- Leakage as a result of early drilling activities on the site, which may have provided conduits through the aquitard. In 1995, EPA properly sealed twelve old wells. These wells were industrial water supply wells, monitoring wells, groundwater/contaminant extraction wells, and two deep drinking water supply wells.

Dissolved contaminants in the lower aquifer are carried by groundwater flow toward discharge areas deep in Eagle Harbor and Puget Sound. However, due to the long transport distances involved, it is likely that any contamination in the lower aquifer will be removed by sorption and decay before discharge to the surface waters.

5.3 Soil Operable Unit

The overall Wyckoff property occupies approximately 57 acres. About 18 acres are in the Soil Operable Unit, including the 8 acres of the Former Process Area. Approximately 0.8 mile of shoreline has been extended and filled at least twice during past reconstructions of the property. The average ground surface elevation is approximately 10 feet above mean sea level. A tree-covered bluff defines the southern boundary of the Soil OU and extends toward the island's interior to an elevation exceeding 200 feet. The Soil OU includes near-surface (0 to 4 feet bgs) and subsurface vadose zone soil (5 to 7 feet bgs), consisting of fill and native materials, extending to the maximum elevation of the water table, which is approximately 5 to 10 feet below ground surface (bgs).

The Soil OU is divided into three components, the Log Storage/Peeler Area, the Former Process Area, and Well CW01 Area (Figure 2). There is widespread near-surface and subsurface soil contamination in these areas, with very elevated levels of contamination in the Former Process Area. The contaminants of concern (COCs) in soil are nine PAHs (benzo(a)anthracene, benzo(a)pyrene, benzo(b&k)fluoranthene, chrysene, dibenz(a,h)anthracene, indeno(1,2,3-cd)pyrene, benzo(b)fluoranthene, benzo(k)fluoranthene, and naphthalene), pentachlorophenol, and dioxins/furans.

During the remedial investigation (RI), a total of 238 near-surface samples and 228 subsurface samples were collected from a grid across the Former Process Area and Log Storage/Peeler Area. Tables 1 and 2 summarize the chemicals detected in the near-surface and subsurface in these areas, respectively.

During the RI, one near-surface and one subsurface soil sample were collected in fill materials during drilling for installation of well CW01, which is located south of the Soil OU boundary (Figure 2). Seven additional near-surface samples were collected from 2-foot trenches excavated in the vicinity of CW01. Three of these samples were collected in fill materials and the other four were collected in native vadose zone soil beyond the fill. Table 3 summarizes the detected chemicals in the vicinity of Well CW01 Area.

5.4 Groundwater Operable Unit

The Groundwater Operable Unit includes the soil and groundwater in the saturated zone beneath the Soil Operable Unit (Figure 2). The Groundwater OU is composed of two water-bearing zones separated by a layer of low-permeability material, called the aquitard. These water-bearing zones (i.e., the upper and lower aquifers) consist of sand and gravel with variable amounts of silt. The aquitard is comprised of stiff marine silt and dense to hard glacial material. The aquitard is continuous throughout the site, but its thickness varies from 10 feet to 40 feet. The aquitard is generally very thick across the site with the thinnest area (10 feet) localized near the northeast corner of the site.

In the development of cleanup alternatives, the Groundwater OU was divided into three areas: the upper aquifer beneath the Former Process Area, the upper aquifer beneath the Former Log Storage Peeler Area, and the lower aquifer (Figure 2).

This remedy selection process and ROD specifically focus on the Soil OU and the upper aquifer beneath the Former Process Area (a portion of the Groundwater OU). EPA will monitor for decreasing trends in the other Groundwater OU components, which have only low levels or no contamination, to ensure that they do not pose a risk to human health or the environment.

In general, groundwater in the upper aquifer flows from the southern portion of the property north toward Eagle Harbor and Puget Sound where it discharges into the intertidal zone. Flow toward Eagle Harbor and Puget Sound increases during low tide because of greater elevation differences between the groundwater and the marine water. Groundwater and NAPL discharge is especially evident at low tide in the form of intertidal seeps (Figure 6). Subtidal discharge have also been observed in the Log Rafting Area (Figure 4).

The movement of upper aquifer groundwater is influenced and complicated by a number of factors including the complex and laterally discontinuous nature of the sediments and their widely varying hydraulic properties; surface water interactions such as the tidal influences that are experienced site-wide; seasonal and climatic influences; and the operation of the existing pump-and-treat system, which is operated 24 hours per day.

Light non-aqueous phase liquid (LNAPL) “pools” have been located in the upper aquifer beneath

the Former Process Area at maximum thicknesses up to 13 feet. Dense non-aqueous phase liquid (DNAPL) "pools" have been measured at maximum thicknesses up to 14 feet. Seeps of NAPL into the intertidal area have been observed along the eastern and northern shoreline. The seeps appear to coincide with observations of LNAPL in groundwater on-site. DNAPL pools have been observed (and periodically removed by divers) on the harbor floor in the Log Rafting Area west of the large dock (former West Dock). L- and DNAPL are present everywhere in the upper aquifer groundwater within the Former Process Area, as well as in the intertidal areas (Figure 7).

Data from the Remedial Investigation (June 1997) and subsequent investigations by the U.S. Army Corps of Engineers indicate that there are approximately 1 million gallons of NAPL in the upper aquifer of the Former Process Area. As Figure 6 indicates, NAPL is flowing horizontally beyond the property boundaries into Eagle Harbor. The low-permeability layer (aquitard) helps to minimize the downward vertical migration of DNAPL to the lower aquifer.

The contaminants of primary concern in the upper-aquifer groundwater are thirteen polynuclear aromatic hydrocarbons (PAHs), pentachlorophenol (PCP), and dioxins/furans[1], which are present in the groundwater in the form of mobile NAPL, dissolved constituents, and residual NAPL held in soil pore spaces. Volatile organics and base/neutral and acid extractables (BNAs) are also present in the groundwater, however, for purposes of cleanup, they are assumed to be co-located with the PAHs.

During the RI field investigation, samples of upper-aquifer groundwater were collected from 29 wells (Figure 5). During the 1995 Supplemental RI field investigation, samples of upper-aquifer groundwater were collected from 11 wells (6 of which were newly installed; also see Figure 5). Field efforts focused on collecting groundwater samples with minimal amounts of NAPL present in order to analyze dissolved-phase concentrations of contaminants. Table 4 summarizes the detected chemicals in the upper-aquifer groundwater.

During the 1994 field investigation, samples of lower-aquifer groundwater were collected from five wells (CW01, CW02, CW05, MWC20, and EWC1; Figure 5). During the 1995 field investigation, samples of lower-aquifer groundwater were collected from the same five wells plus three additional wells installed as part of the 1995 investigation (CW09, CW12, and CW15). Table 5 summarizes the detected chemicals in the lower-aquifer groundwater. It has recently been discovered that CW12 was mistakenly screened in a sandy zone within the aquitard instead of the lower aquifer. As a result, the data from this well is not representative of the lower aquifer.

The NAPL present at the Wyckoff OUs consists mostly of a mixture of creosote, pentachlorophenol, and/or aromatic carrier oils. Creosote was used by itself in the early years of

[1] Dioxins/furans were detected in the NAPL samples, but not in the dissolved-phase groundwater.

wood-treatment production. Later, it was mixed with aromatic carrier oils to obtain deeper penetration of preservative in the wood. Beginning in 1957, pentachlorophenol became commercially available for wood-preserving operations and was mixed with aromatic carrier oils.

Tables 6 and 7 summarize the LNAPL and DNAPL analytical data collected from eight wells, respectively. The compounds detected in NAPL are consistent with the products that were historically used during operations of the property. PAHs are present in both creosote and in aromatic carrier oils. The variations in contaminant concentrations in the NAPL may result from differences in the grade of raw material (i.e., creosote or pentachlorophenol) used in wood-preserving processes over the years, or from differences in sampling and analytical protocols.

6. CURRENT AND POTENTIAL FUTURE SITE AND RESOURCE USES

6.1 Current Land Use

Wood treating operations at the site ceased in 1988. By October 1997, EPA had removed all structures and buildings at the site. The only activity currently at the site is the existing pump-and-treat system.

The existing zoning of the Wyckoff property is Water-Dependent Industrial. Uses under the current zoning may include retail commercial, indoor entertainment, cultural and government facilities, associated parking, agriculture, boatyards, marine sales and repair.

6.2 Reasonably Anticipated Future Land Uses

For purposes of cleanup, the City of Bainbridge Island made recommendations regarding likely future land use designations. In June 1995, Mayor Janet West appointed the Wyckoff Zoning Advisory Committee to make zoning recommendations to the Bainbridge Island City Council. The Committee's mission was to conduct preliminary research for the city and create recommendations for zoning the area. The recommendations below were based on the assumptions that the contamination would be contained in-place, i.e., the contaminated groundwater would be contained using a slurry wall and the contaminated soil would be capped.

At this time, EPA is planning a more aggressive cleanup of the soil and groundwater. It is possible that there will be flexibility in future land uses based on the cleanup that may be achieved, including but not limited to, residential use for large portions of the Wyckoff property.

The Bainbridge Island Zoning Advisory Committee recommendations were:

<u>Residential Use in the Hillside Area</u> (Approximately 39 acres)
Single family and multi-family residential.

<u>Mixed-Use Water-Dependent/Water-Related Commercial in the Log Storage/Peeler Area</u> (Approxima

Water related commercial uses including marina, boatyard with haul-out facility, marine sales and repair, marine related sales, and restaurants. Emphasis is on water-dependent uses.

Open Space Recreational Uses in the Former Process Area (Approximately 8 acres) Limited to public recreational uses including vegetated areas, pedestrian/bike trails, playgrounds, restroom facilities, recreational shelters, parking and potential museum structure.

6.3 Reasonably Anticipated Future Resource Uses

Much of the anticipated future resource uses will be determined by the mitigation plan for the site. Currently, the shoreline is supported by riprap and failing bulkhead. The condition of the shoreline is very important to Federal, State, and Tribal Agencies, as well as the City of Bainbridge Island and its community. EPA has been and will continue to coordinate closely with these entities to develop an acceptable mitigation plan for the sheet pile wall, and to address future land use and resource issues. Mitigation will be required because sections of the sheet pile wall will be constructed offshore, resulting in loss of habitat. The mitigation plan likely will modify large parts of the western shoreline to create a gently sloping beach that will significantly enhance the habitat and ecosystem at the Wyckoff site (see Section 12.3, below). As part of the mitigation effort, EPA will also develop protective measures to support and protect functions of nearshore habitat.

6.4 Groundwater Classification and Basis

Both Class II and Class III groundwater exist at Wyckoff (see Figure 8). Class III groundwater occurs where saltwater intrusion raises total dissolved solids (TDS) concentrations above 10,000 mg/L. Class II groundwater occurs above and upgradient of the 10,000 mg/L boundary.

6.4.1 Upper Aquifer

Groundwater in the upper aquifer underneath the Former Process Area is not currently extracted for potable, agricultural, or industrial purposes, due to saltwater intrusion caused by tidal flushing. High salinity levels are anticipated to remain in the future. The Washington State Department of Ecology has determined the upper aquifer groundwater in the Former Process Area to be non-potable because it is significantly affected by salinity and will not be used as a future source of drinking water. The assignment of Class III to the upper aquifer groundwater beneath the Former Process Area is consistent with EPA's definition of a potential source of drinking water.

The upper aquifer beneath the Former Log Storage Peeler Area does not serve as a current source of drinking water. However, this aquifer could potentially be potable (Class II B groundwater).

6.4.2 Lower and Deep Aquifers

The upper groundwater aquifer is separated from the lower aquifer by a low-permeability layer (aquitard). Data gathered during the remedial investigation and during exploratory drilling by the U.S. Army Corps of Engineers indicate that the low-permeability layer is continuous with thickness ranging from 10 to 40 feet in various locations. Groundwater in the lower aquifer (approximately 80 to 200 feet below ground surface) is considered potable (Class II B groundwater) although this aquifer has never been used for drinking water on this property.

Additionally, there are deep confined aquifers that are located from approximately 200 feet to 1,500 feet or more below ground surface. These aquifers are also potable (Class II A groundwater) and were used in the past by the Wyckoff Company to provide water for on-site operations with excess sent to nearby residents on Rockaway Beach to be used for drinking water purposes. EPA sealed and abandoned two deep drinking water wells (located at 500 feet and 800 feet bgs) in 1995 due to concerns that they could provide conduits for migration of contaminants to the deep aquifers.

6.5 Current Groundwater Use

Two community drinking-water supply systems are located in the immediate vicinity of the Wyckoff property: the Bill Point Wells and the South Eagle Harbor Supply Well. The Bill Point Wells are located upgradient on the hillside south of the Wyckoff property; drinking water is obtained from four wells that are each completed at depths of 150 to 160 feet below ground surface (bgs). Quarterly sampling was conducted from 1988 to 1994 at these wells to determine if they were impacted by the Wyckoff operations. An assessment of the analytical results indicated that some extremely low levels of organics existed in these wells, however, concentrations were extremely low, and in most cases several orders of magnitude below the most stringent drinking water levels. Several inorganic chemicals (metals) have also been detected. However, metals have not been used at the Wyckoff facility as part of wood-preserving operations. Furthermore, the Bill Point wells are also located upgradient of the contamination at Wyckoff, and there is no interconnection between the Bill Point aquifers and the aquifers beneath the Wyckoff site. Therefore, EPA ceased the sampling program in 1994. The South Eagle Harbor Supply Well is located about one-half mile west of the Wyckoff property and is completed at a depth of approximately 600 feet bgs. This well was constructed to provide a replacement water supply for the Rockaway Beach community.

7. SUMMARY OF SITE RISKS

7.1 Summary of Human Health Risk Assessment

A Human Health Risk Assessment (HHRA) was conducted to evaluate the potential human health risks that presented at the Soil and Groundwater OUs if no remedial action is performed. The risk assessment identified and characterized the toxicity of chemicals of potential concern, the possible

exposure pathways, the potential human receptors, and the possible human health risks at Wyckoff. This section of the ROD summarizes results of the baseline risk assessment for both the Soil and Groundwater OUs and adjacent intertidal sediments.

The potential human health risks associated with the Soil and Groundwater OUs were characterized by estimating the risk on a sample-specific basis rather than an area-wide evaluation. This approach allowed for evaluation of both spatial variability and distribution of the risk associated with contaminants of primary concern throughout Wyckoff. The benefit of this approach is that it assists in delineating specific areas requiring remedial action based on potential human health risk. Contaminants of primary concern carried forward in the risk assessment included each chemical detected in at least one sample from each medium analyzed in the Soil and Groundwater OUs if an EPA-derived toxicity value was available. The classes of compounds representing chemicals of primary concern, along with minimum, maximum and average detected concentrations in each medium, are presented in Tables 1 through 7. Chemicals without an EPA derived toxicity value were evaluated qualitatively for overall risk contribution. Only sample results that met all validation requirements were used in the risk assessment.

Individuals who are potentially exposed by direct contact to contaminants include trespassers and health and safety trained workers. Potential exposure scenarios also include future residents. Only the residential exposure scenario was evaluated in the baseline HHRA; this scenario was selected because it is the most conservative and represents the highest potential future land use for large portions of the Wyckoff property. Under this conservative scenario, future residents could become exposed through the ingestion of near-surface, 0-3 inches below ground surface (bgs), and sub-surface (5-7 feet bgs) contaminated soil. The upper aquifer south and west of the Former Process Area (i.e., the upper aquifer underlying the Former Log Storage/Peeler Area) and the lower aquifer groundwater are assumed to be potential sources of drinking water. Consequently, future residential exposures through ingestion of contaminated groundwater and inhalation of volatile organic compounds released from groundwater were also evaluated. Samples collected from the upper aquifer groundwater beneath the Former Process have been classified as non-potable and were excluded from the risk assessment.

An evaluation of the potential human health risk associated with intertidal and subtidal sediments, surface water, and aquatic life next to the Wyckoff site is also summarized below.

For the exposure pathways considered, EPA's default exposure parameters were used. Both reasonable maximum and average exposure cases were calculated. Exposure point concentrations for soil and groundwater ingestion were based on the actual concentrations measured in each sample. For groundwater inhalation, a default volatilization factor was assumed. Exposure point concentrations and intake levels were assumed to be constant over the duration of exposure in order to calculate noncancer health impacts and cancer risk.

Risks were evaluated for cancer-causing and noncancer-causing (toxic) effects. The NCP defines the acceptable risk range for Superfund sites as excess lifetime cancer risks ranging from 1 in

10,000 ($1x10^{-4}$) to 1 in 1,000,000 ($1x10^{-6}$). This risk level means that an individual could face a 1 in 10,000 or 1 in 1 million chance of developing cancer because of exposure to contaminants beyond those cancers expected from other causes. Noncancer effects were evaluated by calculating the ratio between the estimated intake of a contaminant and its corresponding reference dose (the intake level at which no adverse health effects are expected to occur). If this ratio, called a hazard index, is less than 1, noncancer health effects are not expected at the site. A hazard index greater than 1 is an indication that toxic effects may occur, especially in sensitive subpopulations, but is not a mathematical prediction of the severity or incidence of the effects.

Based on Reasonable Maximum Exposure (RME) assumptions, the estimated excess cancer risk to future residents from the ingestion of surface or near-surface soil exceeded 10^{-4} at 35 of the 253 sample locations. These samples, collected from a systematic grid encompassing the entire 18 acres of the Soil OU, represent approximately 120,000 square feet (about 15%) of the Soil OU area. Most of the samples associated with a higher estimated excess cancer risk were limited to the Former Process Area. Exposure through ingestion of surface or near-surface soil was estimated to cause an excess cancer risk of 10^{-5} in approximately 300,000 square feet (about 37%)of the Soil OU. Samples with contaminant concentrations associated with this level of risk were collected in the Former Process Area and, from isolated areas along the southern boundary of the Soil OU, south of the Former Process Area and extending toward the western Soil OU boundary.

Contaminant concentrations in soil samples representing approximately 370,000 square feet (about 46%) of the Soil OU result in an excess cancer risk of 10^{-6}. This excess cancer risk is also associated with samples collected in the Former Process Area, with isolated areas throughout the southern and western portions of the Soil OU. All of the surface or near-surface soils with a Hazard Quotient greater than 1 are already associated with samples with a RME cancer risk greater than 10^{-6}.

The primary contributor to cancer risk through soil ingestion by future residents is benzo(a)pyrene, a carcinogenic PAH. The remaining carcinogenic high molecular weight PAHs, or HPAHs, PCP, and dioxins make up the rest. The primary contributor to non-cancer risk is naphthalene with a calculated HQ of 22.8. Table 8 summarizes the RME concentrations and estimated risk values for major risk drivers in the Soil OU.

In the upper-aquifer groundwater south and west of the Former Process Area, the excess cancer risk from ingestion of groundwater by future residents, based on RME from detected chemicals, ranges from $5x10^{-6}$ to $4x10^{-4}$, with the higher values more closely associated near the Former Process Area. In general, the primary contributors to cancer risk in groundwater are benzo(a)pyrene, benzo(a)anthracene, benzo(b)fluoranthene, and benzo(b)anthracene. Similar to the soil ingestion exposure scenario, exceedances of the non-cancer hazard index of 1 are associated with locations of higher cancer risk. Contributors to non-cancer risk in upper aquifer groundwater include naphthalene (HQ=89), dibenzofuran (HQ=95.5), and Aroclor 1254 (HQ=5.75). Table 9 summarizes the RME concentrations and estimated risk values for major risk

drivers in the Groundwater OU.

Below are tables with the different exposure assumptions used in the average and RME calculations that are responsible for the different risk characterization values in Tables 10 and 11.

Exposure Assumptions for Residential Soil Ingestion

Exposure ID	Body Weight (kg)	Average Time Carcinogenic (yr)	Average Time Noncancer (yr)	Exposure Frequency (day/yr)	Exposure Duration (yr)	Ingestion Rate (mg/day)
RME	a	70	30	350	a	a
Average	70	70	9	275	9	100

a The ingestion rate for RME exposure is actually an "ingestion factor", which combines exposure duration and ingestion rate using the following equation:

$$IF_{soil}/adj\ (mg\text{-}yr/kg\text{-}day) = \frac{I_{soil}/age\ 1\text{-}6 \times D_{age}\ 1\text{-}6}{W_{age}\ 1\text{-}6} + \frac{I_{soil}/age\ 7\text{-}31 \times D_{age}\ 7\text{-}31}{W_{age}\ 7\text{-}31}$$

where:

IF_{soil}-adj = age-adjusted soil ingestion factor (114 mg-yr/kg-day)
W_{age}1-6 = average body weight from ages 1-6 (15 kg)
W_{age} 7-31 = average body weight from ages 7-31 (70 kg)
D_{age} 1-6 = exposure duration during ages 1-6 (6 yrs)
D_{age} 7-31 = exposure duration during ages 7-31 (24 yrs)
I_{soil}/age 1-6 = ingestion rate of soil age 1 to 6 (200 mg/day)
I_{soil}/age 7-31 = ingestion rate of soil all other ages (100 mg/day)

Note that the ingestion factor is in units of mg-yr/kg-day, and therefore is not directly comparable to daily soil intake rate in units of mg/kg-day.

Exposure Assumptions for Residential Groundwater Ingestion

Exposure ID	Body Weight (kg)	Average Time Carcinogenic (yr)	Average Time Noncancer (yr)	Exposure Frequency (day/yr)	Exposure Duration (yr)	Ingestion Rate (l/day)
RME	70	70	30	350	30	2
Average	70	70	9	275	9	1.4

In lower-aquifer groundwater, two of the four wells that were included in the risk assessment displayed an excess cancer risk of greater than 10^{-5} but lower than 10^{-4}. However, recent field investigations revealed that one of those two wells (CW12) was not screened in the lower aquifer. Consequently, data from this well may be representative of either the upper aquifer or contaminant levels penetrating high permeability zones of the aquitard, but not the lower aquifer.

The risk assessment completed in 1991 for the Eagle Harbor Operable Unit relied on data from a 1988 sampling of four transects (transect numbers 10, 11, 12, and 13) located in the intertidal environment adjacent to the Wyckoff property. Chemicals of concern used for the risk assessment included three semivolatile organic compounds, 12 polynuclear aromatic hydrocarbons (PAHs), two nitrogen-containing aromatic compounds, two volatile organic compounds, and 10

metals. Three exposure scenarios were used to complete the risk assessment using the 1988 data set: ingestion of clams, ingestion of intertidal sediments, and dermal contact with intertidal sediments.

The 1988 Puget Sound Estuary Program (PSEP) study of seafood consumption in Puget Sound (Tetra Tech, 1988) provided a high (95th percentile) Puget Sound consumption rate of 95.1 grams per day of fish. This rate corresponds to 230 servings of 1/3-lb of fish over the course of a year. The high rate for shellfish consumption was estimated to be 21.5 g/day, equivalent to a 1/3-lb serving a week. (The study estimated that an average consumer eats at most 30 such servings of fish and three such servings of shellfish per year).

Calculated hazard indices for dermal exposure using RME concentrations did not exceed unity. Cancer risk for dermal contact was not calculated because dermal toxicity values were not available to quantify risks. The noncancer hazards and cancer risk for ingestion of clams and intertidal sediments are summarized in Table 12.

Uncertainties associated with the Human Health Risk Assessment were identified and their potential effects evaluated. The major uncertainties that may result in an underestimation of risk include: (1) the limited characterization data for the presence of dioxins; (2) the assumption that chemicals were not detected in a sample are not present at that location; (3) and the fact that baseline exposures not associated with the Soil and Groundwater OUs are not included within the risk assessment. Cumulative intake, which includes the intertidal area adjacent to the Wyckoff facility, may be higher than estimated. The major uncertainties that may result in overestimation of risk include (1) that risk and doses are additive, and (2) the shallow groundwater from across the site is a potential future drinking water source. The major uncertainties that may result in either estimation or overestimation of risk is the assumption that chemical concentrations will be constant over the duration of exposure and the fact that we don't know how toxic all the chemicals present at the site are.

7.2 Summary of Ecological Risk Assessment

The Ecological Risk Assessment addresses the current and future impacts and the potential risks to upland ecological receptors posed by contaminants at the Soil OU if no cleanup action is taken. The sampling stations evaluated as part of the ecological risk assessment included those located south of the Former Process Area that did not have exceedances of a human health excess cancer risk of 10^{-5}. The other portions of the Soil OU were not evaluated in this baseline ecological risk assessment because (1) the near-surface and subsurface soil in these portions of the OU will be remediated based on human health concerns, so an extensive ecological risk assessment was not conducted; and (2) most of these portions are located in the Former Process Area, which has been heavily developed and has little or no suitable habitat for wildlife.

Ecological management goals for the Soil OU include attainment of soil conditions supportive of plants, invertebrates, mammals and birds that use the Soil OU and the reduction of potential

toxicity at the Soil OU. Assessment endpoints used in the ecological risk assessment focused on species composition, abundance and productivity of plants, invertebrates, mammals and birds using the Soil OU. The measures of exposure and effect used to evaluate the assessment endpoints included concentrations of contaminants in near-surface soil and the responses of receptor species to those concentrations. Responses were quantitatively evaluated through comparisons of exposure point concentrations to ecological screening benchmarks (ESBs) and assessment of the potential bioaccumulation of selected chemicals to ecological receptors.

Potential ecological risk at the Wyckoff Soil OU was estimated through the calculation of hazard quotients. Hazard quotients are generated by taking the exposure point concentrations in near surface vadose soil for each chemical of potential ecological concern and dividing by the ESB for selected indicator species. In this assessment, indicator species included crop plants (oats, barley or lettuce), earthworms, deer mice and American robins. If the hazard quotient for any specific indicator species exceeds 1, it is recommended by the ecological risk assessment that the areas represented by these samples be included for remediation of near-surface soil, additional soil sampling or completion of soil bioassays.

The primary risk drivers for each receptor were slightly different and a function of the availability of toxilogical information for each receptor and the difference in sensitivity to chemicals among plants, invertebrates, mammals and birds. The primary risk drivers for plants included anthracene, benzo(a)pyrene, benzo(a)anthracene, benzo(g,h,i)perylene, pentachlorophenol and 2,3,4,5-tetrachlorophenol. Primary risk drivers for invertebrates were anthracene, acenaphthylene, benzo(g,h,i)perylene, indeno(1,2,3-cd)pyrene, fluoranthene and phenanthrene. Benzo(a)pyrene was the only risk driver identified for mammals. Benzo(a)pyrene and dibenzo(a,h)anthracene were identified as the primary risk drivers for birds. Areas represented by samples with a hazard quotient of greater than 1 generally correspond to the discrete areas south of the former Process Area and the Log Storage/Peeler Area identified in the HHRA as exceeding the 10^{-5} RME cancer risk for human receptors.

Uncertainties associated with the baseline ecological risk assessment which may cause risk to be underestimated include: (1) lack of toxicological information for some chemicals and (2) exclusion of the inhalation and dermal contact exposure pathways for vertebrates. The major uncertainty factor that may cause overestimation of ecological risk is the inclusion of indicator species as potential receptors that may or may not actually use the Soil OU.

An ecological assessment of the marine area adjacent to the Soil OU was conducted previously as part of the Eagle Harbor risk assessment. The human health component of the Eagle Harbor risk assessment focused on the intertidal zone, where direct human contact was most likely and is summarized above. The ecological component focused on the subtidal zone because the Eagle Harbor sediment toxic effects were based almost entirely on subtidal sampling locations. The complete Eagle Harbor risk assessments can be found in the site's Administrative Record. These risk assessments concluded that unacceptable risks existed in the intertidal and subtidal areas for a wide variety of animals and that these problems were largely a result of releases from the Wyckoff

site.

The assessment of ecological risks associated with subtidal sediments relied on a "triad approach" which links contamination to specific adverse ecological effects using a preponderance of field and laboratory evidence. Sediment chemical analysis, laboratory toxicity tests (bioassays) and the evaluation of the abundance of benthic organisms from specific locations are used in combination as the three elements of the triad approach. This approach was used to develop the Puget Sound Apparent Effects Threshold (AETs) used by the State of Washington to establish chemical standards for sediment quality. For specific chemicals, an AET is the chemical concentration in sediment above which particular adverse biological effects have consistently been observed in Puget Sound studies.

In samples from the eastern portion of Eagle Harbor, closest to the Wyckoff facility, sediments exceeded the benthic AET for at least two PAHs at numerous stations. At several locations, all sixteen PAH compounds exceeded their benthic AETs. Based on the comparison of the concentrations in Eagle Harbor samples with the 1988 benthic AETs for Puget Sound, EPA selected mercury and all sixteen PAHs as contaminants of concern in the East Harbor OU. As stated previously, the source of PAHs to the harbor is believed to primarily be releases from the Wyckoff facility. Releases of mercury likely resulted from the historic ship building activity in the western portion of the harbor.

The bioassays for acute toxicity indicated that sediments from many sampled locations in the East Harbor were toxic to amphipods, oyster larvae or both. The bioassay responses were most severe in the areas of high PAH contamination, such as areas of the East Harbor north of the Wyckoff facility. Bioassays of benthic infauna, in this case amphipods, are valuable indicators because the organisms live in direct contact with the sediments, are relatively stationary, and are important components of estuary ecosystems. Other studies conducted in the East Harbor tend to indicate that while sediment contamination is present above the benthic AET for large areas of the harbor, adverse effects on benthic communities at the level of major taxa (polycheata, molluscs and crustacea) may not be occurring except in more heavily PAH contaminated areas close to the Wyckoff facility.

Additional evidence of biological effects in Eagle Harbor includes the prevalence of liver legions and tumors in English sole, as documented by the National Oceanic and Atmospheric Administration (Malins, 1985). The high incidence of such effects in Eagle Harbor relative to other Puget Sound embayments was confirmed in the Puget Sound Ambient Monitoring Program 1991 sampling. This and laboratory research citing the effects of PAH and other sediment contaminants on marine organisms add to the preponderance of evidence indicating potential damage to Eagle Harbor marine life as a result of releases from the Wyckoff facility.

Actual or threatened releases of hazardous substances from the Soil and Groundwater OUs may represent imminent and substantial endangerment to public health or welfare, or the environment.

Based on the RIs for the Soil and Groundwater OUs, the East Harbor OU, the risk assessments and available information, remediation of the soil and groundwater at the Wyckoff facility is warranted. Exposure of future residents to soil and groundwater at the Wyckoff facility pose a human health risk above the acceptable range and may also affect people if other land uses are selected. Consumption of shellfish from adjacent intertidal areas also poses an unacceptable human health risk. Adverse biological effects were documented in much of the East Harbor. Most of the biological effects previously observed were associated with heavy sediment contamination near the Wyckoff facility where releases of contamination continue to occur.

The response action selected in this Record of Decision is necessary to protect the public health or welfare or the environment from actual or threatened releases of hazardous substances in the environment.

8. REMEDIATION OBJECTIVES AND CLEANUP LEVELS

The soil and groundwater investigations have identified contamination requiring remedial action at the Wyckoff site. The need for action was determined based on the results of the human health and ecological risk assessments. In addition, contaminant levels in the soil exceeded the Washington State Department of Ecology Model Toxics Control Act (MTCA) standards, and the contaminant levels in groundwater exceeded marine water quality and surface water standards and will contaminate sediment to levels above Sediment Management Standards. The objectives of the remedial action for Wyckoff Soil and Groundwater OUs are:

8.1 Soil Operable Unit

Future land use is unknown at this time. Although some areas of the site may be residential, others may include recreational uses. Because residential cleanup standards are the most stringent, they have been chosen as a goal for the soil at this site. Remedial action objectives for cleanup of the soil must address potential impacts to human residents who could be exposed to contaminants via ingestion, inhalation, or dermal contact.

Remedial action objectives (RAOs) for all three Soil OU areas are:

- Prevent human exposure through direct contact (ingestion, inhalation, or dermal contact) with contaminated soil.

- Prevent storm water runoff containing contaminated soil from reaching Eagle Harbor.

8.2 Groundwater Operable Unit

Remedial action objectives for cleanup of NAPL in the groundwater at Wyckoff must address impacts to marine water quality, surface water quality, and sediments in Eagle Harbor.

Humans have a negligible risk of direct contact on-site with groundwater at Wyckoff. Groundwater in the upper-aquifer underlying the Former Process Area is not extracted now for potable, agricultural, or industrial purposes due to the high salinity levels (see Section 6.3, above). Site specific groundwater contaminant concentration limits that are protective of the environment and human health have been developed and can be found in Table 13. These limits are to be met at the mudline (i.e., at the points where groundwater flows into surface water). The risks in the other two groundwater areas (the upper aquifer beneath the Former Log Storage/Peeler Area and the lower aquifer) are generally acceptable as most are below 10^{-5} risk. Where the risk exceeds 10^{-5}, the groundwater is in close proximity to the upper-aquifer groundwater beneath the Former Process Area.

The remedial action objectives for the Groundwater OU are:

- Reduce the NAPL source and the quantity of NAPL leaving the upper-aquifer beneath the Former Process Area sufficiently to protect marine water quality, surface water, and sediments (e.g., ensure the quantity of NAPL leaving the site will not adversely affect aquatic life and sediments). Site-specific groundwater contaminant concentration limits will be met at the mudline.

- Ensure contaminant concentrations in the upper-aquifer groundwater leaving the Former Process Area will not adversely affect marine water quality, and aquatic life in surface water and sediment.

- Protect humans from exposure to groundwater containing contaminant concentrations above MCLs.

- Protect the groundwater outside the Former Process Area and in the lower aquifers, which are potential drinking water sources.

The remedial action objectives for groundwater also support the objectives for sediments identified in the 1994 Record of Decision for the East Harbor Operable Unit.

8.3 Key Applicable or Relevant and Appropriate Requirements

The key Applicable or Relevant and Appropriate Requirements (ARARs) for the Wyckoff soil include the State of Washington Model Toxics Cleanup Act (MTCA) cleanup standards. For the groundwater, the key ARARs are State and Federal marine water quality standards/criteria, surface water standards for human consumption of organisms, and sediment management

standards (although the sediments are not addressed under this ROD, sediment management standards were used to calculate groundwater cleanup numbers). Additional important standards for the groundwater are the Alternate Cleanup Levels (ACLs) for the upper aquifer groundwater beneath the Former Process Area that will ensure compliance with the key ARARs, as described in Section 8.3.2, below.

8.3.1 Soil Operable Unit

The Washington Model Toxics Control Act (MTCA) requirements have been identified as a key ARAR for the Soil Operable Unit actions. Specific cleanup levels are discussed in Section 8.4.1 and Table 14.

8.3.2 Groundwater Operable Unit

Alternate Concentration Limits for Groundwater

Usable groundwater should be returned to beneficial uses wherever practicable within a reasonable restoration time frame (40 CFR 300.430(a)(iii)(F)). If groundwater is a current or potential future source of drinking water, remedial actions must reduce contaminant concentrations to or below nonzero maximum contaminant level goals (MCLGs) or maximum contaminant levels (MCLs) established under Safe Drinking Water Act regulations (40 CFR 300.430(e)(2)(i)(B)). However, under the following circumstances, alternate concentration limits (ACLs) in accordance with CERCLA §121(d)(2)(B)(ii) may be used (40 CFR 300.430(e)(2)(i)(F)):

- The groundwater must have a known or projected point of entry to surface water.
- Measurements or projections must show that there is or will be no statistically significant increase of such constituents in the surface water at the point of entry or at any point where accumulation of constituents may occur downstream.
- The remedial action must include enforceable measures that will preclude human exposure to the contaminated groundwater at any point between the facility boundary and all known and projected points of groundwater entry into surface water.

As an EPA policy, technical impracticability to restore groundwater to drinking water levels should be considered and evaluated before ACLs are used.

MTCA (WAC 173-340-720(1)(c)) lists parallel requirements, and the Wyckoff facility groundwater meets the criteria as follows:

- Groundwater from the Wyckoff site discharges directly into Eagle Harbor and Puget Sound at known or projected points (see Figure 6).

- Laboratory treatability testing and groundwater modeling results indicate that there will be no statistically significant increase in contaminants in Eagle Harbor and Puget Sound, after thermal treatment is completed and groundwater contaminant concentrations are naturally attenuated between the shoreline wells and the marine water/sediment interface (i.e., the mudline). Under MTCA, wells can be placed onshore to monitor and predict the contaminant concentration at the mudline. The shoreline wells will be considered an alternate point of compliance under MTCA.

- Enforceable institutional controls outlined in this ROD will preclude human exposure to on-site groundwater and any groundwater between the site and Eagle Harbor or Puget Sound.

Restoration of Class III groundwater (see Section 6.4) to drinking water quality at Wyckoff is impracticable due to high TDS concentrations resulting from seawater intrusion, as well as widespread NAPL and its complex distribution due to the varying geologic formations. Thermal remediation is not expected to restore the upper aquifer beneath the Former Process Area to drinking water standards.

Based on the statutory language allowing ACLs (CERCLA §121(d)(2)(B)(ii)) as well as on the groundwater classification at Wyckoff and the impracticability of restoration, the use of ACLs at Wyckoff is appropriate. The ACLs for the Wyckoff site will be the maximum allowable source concentrations at shoreline monitoring wells that ensure protection of receptors at the mudline. ACLs will be determined by a fate and transport analysis, using a numerical groundwater model to simulate dispersion, sorption, diffusion and tidal dilution between the shoreline wells and the mudline. This ongoing modeling effort will include refinements based on laboratory thermal degradation studies, and data obtained during the thermal remediation pilot test. The goals of the ACLs are to meet State and Federal marine water quality standards/criteria for the protection of aquatic organisms, surface water standards for human consumption of organisms, and to protect marine sediments. Compliance with the ACLs will be confirmed by groundwater monitoring in shoreline wells after thermal remediation is completed.

Pending completion of the fate and transport analysis which will provide ACLs for site groundwater, the groundwater cleanup levels shown in Table 13 may be used as conservative indicators of aqueous contaminant concentrations that must be achieved within the uplands portion of the site.

It should be noted that many of the calculated cleanup levels shown in Table 13 exceed individual compound solubilities, which are the maximum dissolved concentrations possible at equilibrium with NAPL (i.e., the compound cannot dissolve at a sufficient rate to exceed the cleanup level).

8.4 Cleanup Levels

8.4.1 Soil Operable Unit

Media and Contaminants of Concern

The vadose soil (unsaturated soil found to a depth of 5-10 feet bgs)[2] is the medium of concern. The Soil OU is divided into three areas, the Former Process Area, the Former Log Storage/Peeler Area, and the Well CW01 Area (Figure 4). Former wood-treating operations at the Wyckoff property has resulted in widespread near-surface and subsurface contamination of soil, with elevated levels of contamination in the Former Process Area. The primary pathways of concern are human ingestion, inhalation, or dermal contact with contaminated soil. The primary contaminants of concern (COCs) in soil are (see Tables 1 through 3):

- Polycyclic aromatic hydrocarbons (PAHs)
- Pentachlorophenol (PCP)
- Dioxins/Furans

Cleanup Levels and Point of Compliance

As mentioned above, the State of Washington Model Toxics Control Act (MTCA) is the principal ARAR governing the establishment of cleanup levels for environmental cleanup actions. As set forth in WAC 173-340-700(2), MTCA requires that cleanup actions:

- Attain numeric cleanup levels for all COCs[3]
- Attain cleanup levels at defined locations termed the points of compliance

Numeric cleanup goals that define protectiveness for surface soil at this site are presented in Table 14. MTCA provides two methods that establish cleanup levels for soil. The method that applies to the soil at this site is Method B (WAC 173-340-740). For the carcinogenic PAHs, the overall risk sums to $9x10^{-6}$, which meets MTCA goals for risk not to exceed $1x10^{-5}$. The cleanup levels identified in Table 14 for non-carcinogens have not been adjusted downward in accordance with

---

[2] Although the vadose zone is shallow at Wyckoff, in order to comply with MTCA regulations for unrestricted future use, the upper 15 feet of soil should be considered. (See Point of Compliance discussion).

[3] In certain cases, Ecology does allow the use of indicator chemicals.

WAC 173-340-708(5)(c). These adjustments will be made based on the results of the thermal pilot study.

Under MTCA, for future unrestricted use, soil cleanup levels based on human exposure via soil ingestion, dermal contact, or inhalation, the point of compliance shall be established in the soils throughout the site from the ground surface to 15 feet below the ground surface. This represents a reasonable estimate of the depth of soil that could be excavated and distributed at the soil surface as a result of site development activities.

If this point of compliance is not practicable[4], then a point of compliance will be established for direct contact at the ground surface and will require a placement of a soil cap with restricted future use (i.e., institutional controls).

8.4.2 Groundwater Operable Unit

Media and Contaminants of Concern

Groundwater quality at Wyckoff has been degraded through contact with wood-treating chemicals, which were used at this site from the early 1900s to 1988. The presence of free-phase and residual non-aqueous phase liquid (NAPL) in the subsurface (i.e., NAPL in the Soil and Groundwater OUs) acts as a continuing source of groundwater contamination. The primary pathways of concern are the NAPL moving through the groundwater to marine sediments and dissolved concentrations of contaminants moving through the groundwater to surface water and to the marine sediments. The primary contaminants of concern (COCs) in groundwater are polynuclear aromatic hydrocarbons (PAHs) and pentachlorophenol (PCP) (see Table 4). For purposes of cleanup, it is assumed that other contaminants are co-located with the PAHs and PCPs and will be remediated along with these primary contaminants of concern. This assumption is based on: (1) site characterization data show that the contaminants are co-located now, and (2) with the exception of Alternative 1, all the alternatives can address these other contaminants as well.

Cleanup Levels and Point of Compliance

Numeric cleanup goals that define protectiveness are the most stringent of State and Federal marine water quality standards/criteria, risk-based surface water standards for human consumption of organisms, and calculated pore-water maximums based on Sediment Management Standards for marine sediments. As discussed previously, marine water quality, surface water, and marine sediments in Eagle Harbor are the media of primary concern. Protection of the upper

[4] "Practicable" is defined under MTCA as "capable of being designed, constructed, and implemented in a reliable and effective manner including consideration of cost..."

groundwater aquifer beneath the Former Process Area as a source of drinking water is not applicable at this site (see Section 8.3.2, above).

Federal and state surface water quality standards, MTCA surface water cleanup levels for human consumption of aquatic organisms, and calculated groundwater concentrations that protect sediments are presented in Table 13. Concentrations protective of sediments are calculated using the following equilibrium partition relationship, published partitioning coefficients (K_{oc}), and the applicable marine sediment standards (Table 15):

$$C_w = C_s / K_{oc}$$

where:

C_w = pore-water concentration (mg/L)
C_s = sediment concentration (mg/kg_{oc})
K_{oc}= organic carbon partition coefficient (L/kg_{oc})

Where more than one standard exists for a COC, the lowest or most stringent concentration is reported as the appropriate cleanup level in Table 13.

For groundwater, the point of compliance is the location(s) where groundwater cleanup levels must be attained (WAC 173-340-720(6)(d)). The maximum beneficial use of the upper-aquifer groundwater at Wyckoff is recharge to surface water. Therefore, the appropriate point of compliance for the upper-aquifer groundwater at Wyckoff is a conditional point of compliance[5], which is located within the surface water as close as technically possible to the point or points where groundwater flows into the surface water. Compliance can be measured in the seeps in the intertidal area and/or in upland monitoring wells. MTCA allows for a conditional point of compliance when the following seven conditions are met:

- The contaminated groundwater is entering the surface water and will continue to enter the surface water even after implementation of the selected cleanup action;

- It is not practicable to meet the cleanup level at a point within the groundwater prior to entry into the surface water, within a reasonable restoration timeframe;

- Use of a mixing zone to demonstrate compliance with surface water cleanup levels shall not be allowed;

- Groundwater discharges shall be provided with all known available and reasonable methods of treatment (AKART) prior to release into surface waters. Selection of a cleanup action that is permanent to the maximum extent practicable and that uses at least groundwater containment measures to eliminate or minimize releases to the

[5] Can be measured in upland wells with back calculations. A modeling exercise is being conducted to determine admissible groundwater concentrations in upland wells.

surface water shall be considered to have met this requirement;

- Groundwater discharges shall not result in violations of sediment quality values;
- Groundwater and surface water monitoring shall be conducted to assess the long-term performance of the selected cleanup action;
- Prior to approval of the conditional point of compliance, a notice shall be mailed to the Washington State Department of Natural Resources and the United States Army Corps of Engineers for comments.

9. DESCRIPTION OF ALTERNATIVES

9.1 Description of Remedy Components

Four candidate alternatives were identified and evaluated for the Wyckoff Soil and Groundwater Operable Units:

Alt. No.	Cleanup Alternative Description
1	**No Further Action** · Maintain existing pump-and-treat system until it fails (in approximately 5 years)
2a	**Containment with a Slurry Wall** · Construct a slurry wall around the NAPL source within the Former Process Area · Construct a new pump-and-treat system to maintain the water level within the slurry wall · Remove the soil from Well CW01 Area and consolidate within the Former Process Area · Cap the contaminated soil in Former Process and Log Storage/Peeler Areas · Perform long-term O&M, monitoring, and institutional controls within the slurry wall and soil cap · Monitor the groundwater outside the contained area and implement institutional controls, if necessary · Replace the pump-and-treat system every 30 years and replace/repair the slurry wall, as needed
2b	**Containment with a Sheet Pile Wall** · Construct a sheet pile wall (with corrosion protection) around the NAPL source within Former Process Area · Construct a new pump-and-treat system to maintain the water level within the sheet pile wall · Remove the soil from Well CW01 Area and consolidate within the Former Process Area · Cap the contaminated soil in Former Process and Log Storage/Peeler Areas · Perform long-term O&M, monitoring, and institutional controls within the sheet pile wall and soil cap · Replace the corrosion protection system in the future, if necessary · Monitor the groundwater outside the contained area and implement institutional controls, if necessary · Replace the pump-and-treat system every 30 years and replace/repair the sheet pile wall, as needed

3	**In-Situ Thermal Remediation** (Steam Injection and, if necessary, Electrical Resistance Heating) ***Phase I*** · Construct a sheet pile wall (with corrosion protection) around the treatment zone (Former Process Area) · Perform an on-site pilot test of thermal remediation ***Phase II*** · Consolidate the contaminated soil from the Well CW01 and Former Log Storage/Peeler Area within the treatment zone of the Former Process Area · Construct a vapor cover over the treatment zone · Remediate the soil and groundwater using thermal remediation · Disposal of recovered NAPL off-site and treatment of contaminated groundwater and vapors on-site · Monitor biodegradation, oxidation, and other thermally-enhanced attenuation processes in soil and groundwater during and after thermal remediation · Monitor the groundwater outside the treatment zone for decreasing trends and implement institutional controls, if necessary · Implement institutional controls to ensure that the upper aquifer groundwater within the Former Process Area remains unused, and if necessary, to restrict site use to reduce the risk of direct exposure to surface soil
	In-Situ Thermal Remediation plus Contingency · Place a cap over the Former Process Area if thermal treatment does not remediate surface soil to MTCA cleanup standards · Perform ongoing pumping and treating if thermal treatment does not meet groundwater RAOs · Implement institutional controls to ensure that the upper aquifer groundwater within the Former Process Area remains unused, and if necessary, to restrict site use to reduce the risk of direct exposure to surface soil

9.2 Common Elements and Distinguishing Features of Each Alternative

Alternative 1: No Further Action

CERCLA requires evaluation of a no-action alternative to reflect future conditions without any cleanup effort. This alternative is used for comparison to other alternatives and does not include any type of institutional controls. Some cost would be associated with maintaining operation of the existing pump-and-treat system.

Under this alternative, no additional actions would be taken at the site with respect to soil and groundwater. The existing pump-and-treat system would be operated and maintained, but is expected to fail at the end of its design life, which is estimated to be within 5 years. Although the existing system removes some NAPL, due to the difficult nature of this contaminant, sufficient NAPL would not be removed to address the threats to human health and the environment at and from the site.

The purpose of maintaining the existing system would be to slow the migration of NAPL from the site to Eagle Harbor. However, NAPL seeps continue to be observed on the shoreline, both in the intertidal and subtidal areas. Another significant concern with a No Further Action alternative is that the clean sediment caps in the Harbor would be recontaminated. Further, NAPL,

groundwater, and soil contamination would continue to pose an ongoing unacceptable threat to human health and the environment. The estimated present worth cost (5 years O&M cost) of maintaining the existing pump-and-treat system until it fails is $2,036,404. A detailed summary of present worth analysis for this alternative is presented in Table 16.

	Capital PW	O&M PW	Total Present Worth
_Alternative 1		$2,036,404	$2,036,404

Alternative 2a: Containment with a Slurry Wall

This alternative was described in an interim ROD that EPA issued in September 1994 (see Section 2.3). Design of the slurry wall was shifted from installation entirely onshore around the Former Process Area to portions being installed offshore in the Harbor (see Figure 9) in order to effectively contain a greater percentage of subsurface NAPL, and to avoid buried construction obstacles and equipment limitations. The off-shore component of the slurry wall would require an offshore berm and backfill to provide a working surface and structural support for the wall. The berm and backfill would result in a permanent loss of approximately 2 to 3 acres of intertidal and subtidal habitat.

Slurry walls have been demonstrated to be effective at preventing migration of contaminants. Marine water quality standards would be attained beyond the barrier wall.

A new pump-and-treat system would be required under this alternative to prevent precipitation from accumulating inside the wall and causing downward leakage of contaminated groundwater into the lower aquifer. However, the system would not be capable of removing large amounts of NAPL from soil or groundwater. Long-term monitoring would need to be conducted to evaluate the effectiveness of the slurry wall to contain the contaminants. At some time in the future, a second wall (either sheet pile or slurry wall) may need to be installed behind the first slurry wall.

The new pump-and-treat system would need to be operated and maintained (and occasionally replaced) in perpetuity, unless a cost-effective treatment technology is employed, to preserve the integrity of this containment remedy. Groundwater throughout the site would be monitored to determine whether further actions would be necessary.

Under Alternative 2a, the contaminated soil in the Former Log/Storage Peeler Area and the Former Process Area would be capped. The Former Log/Storage Peeler Area would be capped with a multi-layer system which may include a topsoil layer, select fill material, a geotextile layer, a drain layer, and a barrier layer. Because the entire ground surface of the Former Log Storage/Peeler Area would be covered, this area could achieve residential cleanup levels. Several capping systems are possible for the Former Process Area, including variations on a multi-layer cover system or some form of an asphalt-concrete cover system. This would allow for a mix of commercial or recreational uses. Contaminated soil from a small area on the hillside in the southern portion of the property, the Well CW01 area, would be excavated and placed beneath

the cap in the Former Process Area. The excavated area would be backfilled with clean soil.

Because soil and groundwater contamination would remain at the site under this option, ongoing long-term monitoring would be needed and institutional controls would be implemented in both the Log Storage/Peeler Area and Former Process Area. The estimated present worth cost (capital plus 30 years of O&M) of this alternative is $42,571,446. Detailed summaries of capital cost present worth and present worth analysis for this alternative are presented in Tables 17 and 18, respectively.

	Capital PW	O&M PW	Total Present Worth
Alternative 2a	$32,657,962	$9,913,484	$42,571,446

Alternative 2b: Containment with a Sheet Pile Wall

This alternative is a modification of Alternative 2a. Instead of a slurry wall, a sheet pile wall, from the surface down to the aquitard, would be constructed under this alternative.

A sheet pile wall is created by driving interlocking sections of structural materials together into the earth to create a continuous, jointed wall. Sheet piles are usually formed from steel due to its strength and availability. Due to the potential for leakage through the joints, sheet piles were not historically used for environmental remediation. However, in recent years, manufacturers have made significant advances in pile interlock design, sealing materials, installation techniques, and interlock leakage monitoring. The purpose of installing a sheet pile wall at Wyckoff is similar to the slurry wall, i.e., to prevent migration of contaminants to Eagle Harbor. A sheet pile wall could last more than 30 years with proper corrosion protection.

There are advantages in using sheet pile walls as vertical barriers in environmental projects. This is especially true at the Wyckoff site where the sheet pile wall can be constructed without a berm and backfill reducing offshore impacts. However, because buried bulkheads and debris exist near the north and east shoreline, the sheet pile wall would need to be placed slightly offshore to the toe of the riprap along the eastern and northeast shoreline and just outside of the existing bulkhead to the north (Figures 10 and 11). This would result in a loss of approximately 0.6 to 0.9 acres (1850 linear feet) of intertidal habitat along the shoreline.

Figure 10 shows the sheet pile wall in a “partial” alignment. This alignment will be adequate for the Thermal Remediation Alternative (Alternative 3, below). However, for long-term containment purposes associated with this alternative (Alternative 2b), a fully enclosed wall would be required.

A new pump-and-treat system would be required under this alternative to prevent precipitation from accumulating inside the wall and causing downward leakage of contaminated groundwater into the lower aquifer. Like the existing system and the one proposed in Alternative 2a, this

system would not be capable of removing large amounts of NAPL from soil or groundwater. Long-term monitoring would be conducted to evaluate the effectiveness of the sheet pile wall to contain the contaminants. At some time in the future, a second wall (either sheet pile or slurry wall) may need to be installed behind the first sheet pile wall.

Similarly, like Alternative 2a, the new pump-and-treat system would need to be operated and maintained (and occasionally replaced) in perpetuity to preserve the integrity of this containment remedy unless some future cost-effective treatment technology is undertaken. Groundwater throughout the site would be monitored to determine whether further actions would be necessary.

Again, as with Alternative 2a, the contaminated soil in the Former Log/Storage Peeler Area and the Former Process Area would be capped. Contaminated soil from a small area on the hillside in the southern portion of the property, the Well CW01 area, would be excavated and placed beneath the cap in the Former Process Area. The excavated areas would be backfilled with clean soil.

Because soil and groundwater contamination would remain at the site under this option, ongoing long-term monitoring would be needed and institutional controls would be implemented in both the Log Storage/Peeler Area and Former Process Area. The estimated present worth cost (capital plus 30 years O&M) of this alternative is $28,530,174. Detailed summaries of capital cost present worth and present worth analysis for this alternative are presented in Tables 19 and 20, respectively.

	Capital PW	O&M PW	Total Present Worth
Alternative 2b		$18,311,851	$10,218,323
$28,530,174			

Alternative 3: In-situ Thermal Remediation (Steam Injection and, if necessary, Electrical Resistance Heating) - EPA's Selected Remedy

Steam injection and electrical resistance heating (also known as six-phase soil heating) are innovative thermal technologies that deliver heat underground in order to mobilize and enhance the recovery of contaminants. A heat source is delivered via injection wells and/or electrodes. Heating the contaminated zone enhances the cleanup of difficult-to-remediate contaminants by:

- Reducing the viscosity of the contaminants to enhance extraction
- Increasing the contaminant vapor pressures to enhance volatilization
- Increasing contaminant solubilities to enhance dissolution
- Increasing microbial degradation and natural oxidation rates

Wells are placed within and surrounding the contaminated zone to collect the contaminants that are easier to extract. The extracted water, gas, and NAPL are either treated on-site or disposed of off-site.

If necessary, electrical resistance heating will be implemented in areas harder to heat, such as low-permeability soils, and/or in sensitive areas, such as the aquitard surface. Electrical resistance heating utilizes the same heat and recovery mechanisms as steam injection, except that the heat source is generated in the ground via electrical currents and the technology relies on conductive heating. Contaminants will be extracted and treated, or disposed of, in the same manner as steam injection.

Not all NAPL is expected to become mobilized by the delivery of heat. Heated areas of the site are expected, however, to remain at high temperatures for several months or years. These high temperatures will continue to enhance the volatilization and dissolution rates of the residual, relatively immobile NAPL. Ongoing extraction of contaminants would continue for an additional 2 to 5 years after "steaming" is stopped.

Thermal effects will also contribute to enhanced rates of microbial degradation and oxidation (contaminant breakdown) through hydrous/pyrolysis/oxidation (HPO, or oxidation) of contaminant constituents, resulting in non-toxic compounds.

Thermal remediation is capable of remediating contaminants that occur in both the unsaturated and saturated zones. Therefore, under this alternative, contaminated soil (approximately 60,000 cubic yards) from the Former Log Storage/Peeler Area and the Well CW01 area will be excavated and placed within the Former Process Area to be remediated by steam injection and, if necessary, electrical resistance heating. The excavated areas will be backfilled with clean soil.

Active steam injection would likely be applied at the Wyckoff site for approximately 2-3 years and ongoing pumping and treating of contaminated groundwater and vapors would be continued for an additional 2-5 years, plus 2 years of monitoring, resulting in approximately 10 years of full-scale remediation.

Steam injection is currently being utilized at the Southern California Edison Pole Yard site in Visalia, California. After two years of operation, steam injection has removed/destroyed over 141,000 gallons of creosote from the subsurface. Of the 141,000 gallons, approximately 55 percent were recovered as a NAPL, and the rest were evenly split between recovery in the water phase, recovery in the vapor phase, and destroyed in-situ via biodegradation and/or hydrous/pyrolysis/oxidation (HPO) process. In comparison, approximately 1,200 gallons were removed in 20 years by conventional pump-and-treat. The use of steam injection has accelerated the removal of creosote contamination by over 1,000 times.

An important component of the thermal remedy at the Wyckoff site will be construction of a temporary (approximately 10-15 years) sheet-pile barrier wall partially around the treatment zone (see Figures 10 and 11 and the sheet pile wall discussion under Alternative 2b, above)[6]. Under this alternative, the sheet pile wall will serve as a temporary barrier wall to eliminate the possibility of migration of contaminants, including those mobilized by the heat, to Eagle Harbor during the remediation process. If a sufficient amount of contamination were removed, i.e., depending on the degree of success of this alternative, the sheet pile barrier could be removed. However, if it is determined that success has not been achieved at the conclusion of thermal remediation, then the sheet pile wall may be cut off at the mudline, but will remain in the ground.

Another important component of the remedy would be a vapor cover over the heated areas to significantly reduce emissions of steam and contaminants into the atmosphere. As Figure 12 shows, the vapor cover will include a series of slotted horizontal pipes designed to extract steam and contaminated vapors, as well as to help minimize potential for leakage of vapors to the atmosphere. Additional layers, including gravel and an asphalt cap, may provide additional safety measures. The vapor cover will be removed after cleanup is completed.

The thermal remediation process includes extraction and off-site disposal and incineration of NAPL, the principal threat at the site. Treatment will be necessary for the large amounts of contaminated groundwater and vapors that are expected to be removed by the extraction system. Treated water that complied with water quality standards will be discharged to Puget Sound. The treated vapors will comply with air emission limitations. The process units for the groundwater treatment system will be similar (but larger than) the existing pump-and-treat system at the site. The vapor treatment system will be similar to that used at soil vapor extraction systems (SVE), a commonly used technology for soil contaminated with petroleum and volatile organics.

Under this alternative, if thermal treatment is successful, the remedial action objectives described in Section 8 could be met within a period of 10-15 years. Because thermal technologies, along with limited pump-and-treat, biodegradation, and oxidation (contaminant breakdown) may be capable of near complete removal/destruction of contaminants in the soil and groundwater, it is possible that unrestricted use of the site could be achieved (with the exception of human consumption of drinking water from the upper aquifer beneath the Former Process Area). Some short-term monitoring after site cleanup will be necessary to ensure ongoing protection of human health and the environment.

As part of the implementation of this alternative, EPA will conduct a pilot study first to assess the

[6] Although the sheet pile wall is estimated to last more than 30 years with corrosion protection, under this alternative, the sheet pile wall would only be in-place during the period of thermal remediation, which is estimated to be approximately 10-15 years.

effectiveness and feasibility of full-scale thermal remediation in achieving cleanup goals at Wyckoff. The pilot study will test the steam injection technology as a primary remediation method and electrical resistance heating as a supplemental technology to steam. If the pilot study is determined to be effective and feasible, the results will aid in the design of the full-scale thermal remediation process. The pilot study will utilize the existing pump-and-treat system and will be operated for approximately 1 to 2 years.

To the extent practicable, the pilot will utilize all the components of the full-scale design and operational strategy and may provide important project information such as:

- Community impacts (e.g., noise, air emissions, and odors)
- Potential adverse effects to Eagle Harbor
- Vapor cap performance
- Dioxin cleanup in soil
- Total NAPL removal, expected steam movement, and aquitard heating (i.e., can NAPL be recovered from the aquitard surface?)
- Treatment plant performance
- Microbial population and contaminant oxidation before, during and after thermal treatment
- Operational approaches (e.g., fuel and water supply options, injection and extraction strategy, and monitoring)

In addition to evaluating the items listed above, EPA will evaluate the results of the pilot study to assess the likelihood that full-scale remediation will achieve the cleanup goals for the site. Achieving the cleanup goals is the long-term benefit that would justify the additional capital costs required to implement full-scale thermal remediation at the site. Accordingly, EPA has developed performance expectations for the pilot study that correspond to the final cleanup goals. If the pilot study reasonably achieves the following performance expectations, EPA believes that full-scale remediation is likely to be successful:

(1) Mobile NAPL is not detected within the pilot study area.

Thermal remediation is expected to remove a significant amount of NAPL from the site, thus, permanently ensuring future protection of human health and the environment. A suitably constructed and operated pilot study can be expected to remove substantially all the mobile free-product NAPL from the treatment area.

(2) Dissolved concentrations of NAPL constituents in groundwater within the perimeter of the pilot study area are sufficiently reduced such that - using site specific modeling - EPA can reasonably predict that the post-treatment dissolved concentrations that move from the site to Eagle Harbor and Puget Sound would not exceed marine water quality/criteria, surface water quality, and sediment standards at the mudline. (See Section 8.4, Cleanup Levels, above)

In addition to removing large quantities of the NAPL itself, EPA believes that thermal effects will contribute to significantly enhanced rates of biodegradation and hydrous/pyrolysis/oxidation (HPO) of NAPL constituents dissolved in groundwater before they can move to sensitive receptors or environments, thus potentially eliminating the need for a long-term remediation at this site.

Utilizing results of the pilot study, EPA will develop a model to predict the extent to which, and the timeframe within which, dissolved concentrations of NAPL constituents can be expected to decrease between the site and the mudline. This decrease may be due to many factors, including biodegradation and oxidation processes. This model will incorporate both field results and laboratory measurements.

(3) Surface soil (from 0 to 15 feet below ground surface) concentrations within the pilot study area attain MTCA cleanup levels. (See Section 8.4, Cleanup Levels, above)

As part of the pilot study, EPA will measure the active removal and the rate of attenuation of contaminants in surface soil through bioremediation and other oxidative processes. It is hoped that thermal remediation will cleanup the unsaturated soil to MTCA soil cleanup levels. If MTCA soil cleanup levels are not likely to be attained, however, EPA may still implement full-scale remediation but will consider a combination of actions for the soil which may include a soil cap, institutional controls, or other measures integrated into the future site use to ensure long-term human health and environmental protection.

If the pilot study reasonably attains these performance expectations, then full-scale remediation would be constructed and operated. However, if the pilot test does not reasonably achieve these performance expectations, EPA may conclude that full-scale remediation is not likely to achieve the cleanup goals for the site. If this determination is made, Alternative 2b (containment with a new pump-and-treat system) remedy will be implemented.

The estimated present-worth cost of Alternative 3 (capital plus 10 years O&M) is $41,479,143. Detailed summaries of capital cost present worth and present worth analysis for this alternative are presented in Tables 21 and 22, respectively.

The estimated cost of Alternative 3 plus the potential contingency of placing a soil cap over the Former Process Area if full-scale thermal treatment does not remediate the surface soil to MTCA cleanup standards, ongoing pumping and treating[7] if thermal treatment does not achieve

[7] For cost estimating purposes, EPA is assuming that the continued pumping and treating would occur for an additional 20 years. It is hoped that pumping and treating would be

groundwater RAOs, and institutional controls, is $46,389,251. Detailed summaries of capital cost present worth and present worth analysis for this alternative with contingency are presented in Tables 23 and 24, respectively.

	Capital PW	O&M PW	Total Present Worth
Alternative 3	$22,741,958	$18,737,185	$41,479,143
Alt. 3 plus Contingency	$24,571,236	$21,818,015	$46,389,251

10. COMPARATIVE ANALYSIS OF ALTERNATIVES

The remedy for the Wyckoff Soil and Groundwater OUs was selected on the basis of the remedial alternative evaluation criteria found in the NCP. The nine criteria are divided into three categories: threshold, balancing, and modifying criteria. To be eligible for selection, an alternative must meet the two threshold criteria. The five balancing criteria weigh trade-offs among alternatives; a low rating on one balancing criterion can be compensated by a high rating on another. The State and Suquamish Tribe support the selected remedy.

10.1 Overall Protection of Human Health and the Environment

Overall protection of human health and the environment addresses whether each alternative provides adequate protection of human health and the environment and describes how risks posed through each exposure pathway are eliminated, reduced, or controlled, through treatment, engineering controls, and/or institutional controls.

Alternative 1 (No Further Action) would not protect human health and the environment because the existing pump-and-treat system is not capable of removing or containing the risks presented by the site and is expected to fail within the next five years. As a result, NAPL and its contaminant constituents would continue to migrate to Eagle Harbor. Because this alternative does not meet threshold criteria, it will not be discussed further in this evaluation.

Alternatives 2a and 2b (Containment) will protect human health and the environment by: (1) constructing an impermeable wall barrier around the site that prevents flow of contaminants to Eagle Harbor, and (2) capping of the soils to prevent contact. Operating and maintaining a pump-and-treat system in perpetuity (unless a cost-effective future treatment technology is employed) would be necessary to maintain the integrity of the remedy within the slurry or sheet pile wall. Ongoing long-term monitoring and institutional controls would be necessary to ensure adequate

---

discontinued beyond this period and the residual contamination would naturally attenuate over time. Under this scenario, the sheet pile wall may be cut off at the mudline, but would remain in the ground.

containment, prevent damage to the soil cap, and to prevent potential future exposure.

Alternative 3 (Thermal Remediation) will, if successful, provide the greatest protection to human health and the environment by actively treating soil and groundwater and by removing mobile NAPL (the principal threat) from the site. Thermal technologies can further enhance distillation and biodegradation/oxidation of NAPL and its contaminant constituents such that residual and dissolved concentrations may not adversely impact the marine environment.

10.2 Compliance with Applicable or Relevant and Appropriate Requirements (ARARs)

Section 121(d) of CERCLA and NCP §300.430(f)(1)(ii)(B) require that remedial actions at CERCLA sites at least attain Applicable or Relevant and Appropriate Federal and State Requirements (ARARs), unless they are waived under CERCLA section 121(d)(4).

Alternatives 2a, 2b, and 3 will comply with all ARARs. The key ARARs are the Washington Model Toxics Control Act (MTCA) soil cleanup levels, federal and state marine water quality standards, surface water standards for human consumption of organisms, and state sediment management standards (applicable for calculation of groundwater cleanup standards). Alternatives 2a and 2b (Containment) would comply with these standards on top of the soil cap and beyond the barrier wall. Alternative 3 (Thermal Remediation) could attain these standards at the mudline where groundwater flows into the surface water through the combination of removal and treatment/disposal of contaminants and biodegradation/oxidation processes.

Another key ARAR for Alternative 3 will be compliance with air emission limitations. For example, the boilers necessary to produce steam will require controls to comply with limitations on nitrogen oxide (NO_x) emissions. Also the treatment system of extracted groundwater and vapors for Alternative 3 will need to comply with requirements under the Puget Sound Air Pollution Control Agency, the federal Resource Conservation and Recovery Act, the state Dangerous Waste Act, and substantive requirements of the State's National Pollution Discharge Elimination System (NPDES).

Alternative 3 includes active soil and groundwater treatment and could achieve state and federal standards more permanently than Alternatives 2a or 2b.

10.3 Long-Term Effectiveness and Permanence

Long-term effectiveness and permanence refers to expected residual risk and the ability of a remedy to maintain reliable protection of human health and the environment over time, once cleanup levels have been met. This criterion includes the consideration of residual risk that will remain onsite following remediation and the adequacy and reliability of controls.

The long-term effectiveness of remediation measures is important at the Wyckoff site because of the large volume of NAPL in soil and groundwater. NAPL is expected to act as a source of contamination to the marine environment for a very long time unless effective measures are implemented.

Alternatives 2a and 2b (Containment) will be effective so long as the slurry or sheet pile wall remains intact around the site and the cap is adequately maintained. Under both alternatives, it is likely that a second wall would need to be constructed in the future behind the first wall to maintain ongoing containment over the long-term. Also, because water would continue to flow onto the site, a pump-and-treat system would also need to be operated and maintained (and

occasionally replaced) so contaminated water does not flow over the wall or leak into the lower aquifer.

The long-term effectiveness of Alternative 3 (Thermal Remediation) is promising for the Wyckoff site. In early 1999, EPA began a series of laboratory tests to evaluate the effectiveness of steam injection to recover NAPL from the Wyckoff soil and groundwater. Steam was injected into soil cores from the Wyckoff site, to simulate the expected field conditions. Results indicated that approximately 99 percent of total PAHs were removed by steam injection. Although the Wyckoff lab samples did not contain any pentachlorophenol (PCP), lab tests using contaminated soil from the Visalia project (see page 38, above) indicated that 100 percent of PCP was removed by steam injection. Based on this information and the results from the Visalia project, it is expected that a significant amount of NAPL will be removed from the Wyckoff soil and groundwater by thermal remediation. EPA will be able to better quantify the total amount of NAPL to be removed during the on-site pilot test.

Factors that are likely to affect actual removal success include the volume of NAPL actually at the site, the ability to extend thermal effects to all NAPL areas and the ability to recover NAPL from heated areas. These uncertainties would be better assessed through an on-site pilot study (see pilot study discussion in Section 9.2, Alternative 3).

It has been demonstrated at Visalia that in-situ oxidation and biodegradation is occurring and results from EPA and UC Berkeley laboratory studies on Wyckoff soils indicate that the same phenomenon will likely occur at Wyckoff during and after steam injection. This could greatly reduce the amount of residual contamination and greatly increase the long-term effectiveness and permanence of Alternative 3.

Placement of a vapor cover over the area of thermal remediation is necessary to enhance unsaturated soil cleanup, and to ensure that harmful vapor and contaminants, as well as odors, from leaking into the atmosphere (Figure 12). The level of cleanup that can be achieved in the unsaturated zone is uncertain. After completion of the remediation, samples will be taken in the unsaturated soil to determine the actual concentrations in the soil. If the thermal remediation does not achieve soil cleanup goals in any part of the site, a permanent soil cap and/or institutional controls would be required in the Former Process Area.

10.4 Reduction in Toxicity, Mobility, and Volume Through Treatment

Reduction in toxicity, mobility, or volume through treatment refers to the anticipated performance of the treatment technologies that may be included as part of the remedy.

Alternatives 2a and 2b (Containment) include a pump-and-treat system in order to maintain the water level within the slurry and sheet pile wall, respectively. Treatment is necessary because the extracted groundwater will be contaminated and require treatment before it can be discharged to Puget Sound. But since the pump-and-treat system is not expected to remove large quantities of

NAPL, the pump-and-treat system is not effective at reducing the principal threat posed by NAPL at the site.

Alternative 3 (Thermal Remediation) will involve aggressive treatment technologies that will effectively reduce the toxicity, mobility, and volume of soil and groundwater contaminated with the principal threat NAPL. NAPL will be transported off-site for incineration and disposal. Contaminated vapors and groundwater that are extracted will be treated prior to discharge to the atmosphere and Puget Sound, respectively.

10.5 Short-Term Effectiveness

Short-term effectiveness addresses the period of time needed to implement the remedy and any adverse impacts that may be posed to workers, the community and the environment during construction and operation of the remedy until cleanup levels are achieved.

The most significant impact associated with Alternative 2a (Containment with Slurry Wall) is that it requires placement of a permanent berm and backfill over 2 to 3 acres of intertidal habitat in order to construct the slurry wall. The estimated cost of mitigating these impacts is $1.2 million.

Alternative 2b (Containment with Sheet Pile Wall) would result in a minimal loss of intertidal habitat, approximately 0.6 to 0.9 acres (1850 linear feet) of shoreline. This would result in a more modest mitigation effort with an approximate cost of $250,000. More details regarding the short-term effectiveness of sheet pile walls are described under Alternative 3, below.

Alternative 3 (Thermal Remediation) should cause accelerated migration of heated NAPL. Heated NAPL has the potential to migrate farther through the subsurface and marine environment than ambient-temperature NAPL. In order to eliminate this impact, EPA will construct a sheet pile wall around the treatment zone (around the Former Process Area) and will design and operate the injection of steam and extraction of contaminants at the site accordingly. For example, EPA might apply the steam process slower in areas closest to Eagle Harbor to ensure that the potential fugitive NAPL or thermal effects do not adversely affect the marine environment. Groundwater, temperature, and intertidal habitat monitoring will be performed in critical shoreline areas.

Driving of the sheet piles at Wyckoff will generate moderate to high noise levels. During EPA's sheet pile driving test conducted in September 1999, noise levels above 80 decibels (dB) were recorded in surrounding communities. EPA will be assessing noise abatement measures during the design phase of this project (see Section 12.3, below).

For Alternative 3, a sheet pile wall is preferred over a slurry wall because sheet pile walls can be installed in various configurations and possibly moved and reconfigured as conditions change during the remediation process. A sheet pile wall will not require an extensive berm and backfill like the slurry wall in Alternative 2a. A sheet pile wall can be removed when cleanup is achieved. However, the sheet pile wall may be cut off at the mudline if long-term containment is necessary

to allow for microbial degradation, oxidation, and other thermally-enhanced attenuation processes in the groundwater to occur over time.

Steam injection would result in some amount of heat transfer through the sheet pile wall. However, based on conservative modeling, temperatures should be greatly reduced outside the sheet pile wall. Thermal effects would be greatest in the areas directly adjacent to the wall and the effects of temperature would diminish with distance. It is unknown at this time if the potential thermal impacts adjacent to the wall would result in any loss of habitat or the loss of the use of habitat. EPA is currently coordinating with the Natural Resource Agencies and Suquamish Tribe and is studying the potential effects of heat and adverse environmental impacts associated with the sheet pile wall. Potential thermal impacts may also be studied during the pilot test. If necessary, appropriate compensatory mitigation measures would be implemented.

Another short-term concern is protection of the lower aquifer from NAPL contamination. The upper aquifer is separated from the lower aquifer by a low permeability layer (aquitard). Groundwater in the lower aquifer is potable and samples indicate that it has very low levels of contamination. Based on numerous field explorations during the RI and the Corps of Engineers exploratory drilling events in 1997 and 1999, it appears that the aquitard is continuous throughout the site. Its thickness ranges from 10 to 40 feet. The aquitard is generally very thick across the site with the thinnest area (10 feet) localized near the vicinity of Well EWC4 (Figure 5). The aquitard would help prevent NAPL from moving downward to the lower aquifer during thermal remediation (See also discussion in Section 6.3 of the Responsiveness Summary.)

Thermal remediation might also produce noise due to operation of the process units and odor from the removal and treatment of large amounts of contamination. EPA will take measures to reduce noise levels by installing noise abatement equipment such as silencers and will reduce odors by constructing a tight vapor cover on the site as well as by installing filter systems to reduce odor emissions.

10.6 Implementability

Implementability addresses the technical and administrative feasibility of a remedy from design through construction and operation. Factors such as availability of services and materials, administrative feasibility, and coordination with other governmental entities are considered.

Alternative 2a (Containment with Slurry Wall) is implementable. The key element in constructing the slurry wall is to ensure that it is sealed into the aquitard so that it would serve as an impermeable barrier to contaminants.

Based on experiences at other sites, by going slightly offshore to avoid construction obstacles, and data from a summer 1999 installation test, sheet pile walls can be implemented successfully at Wyckoff. The test was conducted at the worst portion of the site, along the northeastern shoreline where the depth to aquitard is deepest (75 feet bgs) and where large cobbles are known

to exist. The sheet piles were successfully driven to and seated into the aquitard. Information gathered from this test indicated that a heavy, robust, hot-rolled steel sheet pile will be required for this site. Sheet piles were monitored during installation to determine if the interlocks were intact, and were extracted after the test program for inspection. Evidence of the extracted piles showed that they can properly be installed and will be effective at containing the contamination.

One important factor associated with Alternative 3 is the water supply needed for steam and also for cooling extracted groundwater prior to treatment. EPA is currently evaluating a range of water supply options including an on-site production well in a deep aquifer, local sewage treatment plant effluent, and seawater desalinization (See also discussion in Section 12.3 of this ROD and Section 7 of the Responsiveness Summary.)

10.7 Cost

The estimated capital and operation and maintenance costs for each alternative are provided in Tables 7-15. The estimated total costs represent the first 30 years of capital and system operation only. They are based on the information available at the time the alternatives were developed. Cost estimates are expected to be accurate within a range of +50 or -30 percent.

Alternative 3, if successful, will provide a cost-effective solution and could be a permanent solution to the contamination at the Wyckoff site. Thermal remediation will reduce the toxicity, mobility, and volume of contaminants at this site.

10.8 State/Tribal Acceptance

The Washington State Department of Ecology has been involved with the development of remedial alternatives for the Wyckoff Soil and Groundwater OUs and agrees with EPA's Selected Remedy.

The Suquamish Tribe also supports the Selected Remedy.

10.9 Community Acceptance

The community supports the Selected Remedy but has concerns regarding noise levels, air emissions, odors, and visual impacts during construction and operation. Comments and EPA's responses on the Proposed Plan for the site are included as Part 3, the Responsiveness Summary of this ROD.

11. PRINCIPAL THREAT WASTE

The NCP establishes an expectation that EPA will use treatment to address the principal threats posed by a site wherever practicable (NCP §300.430(a)(1)(iii)(A)). Principal threat wastes include wastes with high concentrations of toxic compounds or are highly mobile which generally cannot be contained in a reliable manner or would present a significant risk to human health and the environment should exposure occur.

The free product light and dense non-aqueous phase liquids (L and DNAPL) at Wyckoff are the principal threat in the soil and groundwater. The NAPL contamination contains very high levels of PAHs and PCPs, and is highly mobile. NAPL is currently moving out into Eagle Harbor and Puget Sound and potentially into the lower aquifers over time.

The containment alternatives (2a and 2b) will not treat the principal threat wastes in soil and groundwater, but will keep them in-place at the site until a future treatment technology is employed. The containment alternatives present a risk of failure or need for replacement over the very long-term.

Thermal technologies, however, will utilize treatment to actively recover, remove, and/or treat the principal threat wastes. If successful, this technology could provide a permanent solution to the NAPL problem in the soil and groundwater at Wyckoff.

12. SELECTED REMEDY

12.1 Selected Remedy for the Soil and Groundwater Operable Units

Alternative 3, Thermal Remediation, is the Selected Remedy. This alternative is selected because it will achieve substantial risk reduction by treating the principle threat at the site. This alternative could permanently reduces risks and is cost-effective .

The following are major components of Thermal Remediation:

- Construct a sheet pile wall around the highly contaminated area of the Former Process Area to prevent potential flow of contaminants to Eagle Harbor during remediation;

- Implement thermal remediation of contaminated soil and groundwater in two phases, with an on-site pilot test being the first phase. The pilot system will be designed and implemented with the ability to expand to the full-scale system if the test reasonably achieves project performance expectations (see Pilot Study discussion in Section 9.2, Alternative 3, above) and if the thermal technology provides enough long-term benefits to be worth the additional capital costs. If the pilot study is successful at meeting these expectations, then the second phase, the full-scale system, will be constructed and operated. The pilot study will test both steam injection and electrical resistance heating (as a supplemental technology to steam

injection). The full-scale thermal remediation system will be designed and constructed according to the results of the pilot;

- The pilot system will utilize the existing treatment plant to treat contaminated groundwater. The same substantive National Pollutant Discharge Elimination System (NPDES) standards developed for the existing treatment plant, with some modifications, will apply. Those standards, along with the modifications, are presented in Table 25. Substantive NPDES standards will be developed for the full-scale thermal remediation system (if implemented) based on the results of the pilot study;

- The pilot test data will be used to refine the alternate concentration limits (ACLs) for the Wyckoff groundwater (see Section 8.3.2). The goals of the ACLs are to meet ARARs (State and Federal marine water quality standards/criteria, surface water standards for human consumption of organisms, and to protect the marine sediments) at the mudline;

- Recovered NAPL will be disposed of off-site;

- If the pilot test does not reasonably achieve performance expectations, then Alternative 2b, Containment with a Sheet Pile Wall Remedy, will be implemented;

- If the pilot study is successful, consolidate contaminated hot spots from the Former Log Storage/Peeler Area and the Well CW01 area (approximately 60,000 cubic yards) within the Former Process Area to be remediated by the full-scale thermal treatment. Backfill the excavated areas with clean soil;

- Construct a vapor cover above the treatment area (the Former Process Area) to enhance recovery of contaminated vapors, to minimize emissions to the atmosphere, and to reduce odors. Air emissions associated with the vapor cover and thermal process units will comply with appropriate regulations;

- Monitor biodegradation, oxidation, and other thermally-enhanced attenuation processes in soil and groundwater during and after active thermal treatment is completed to confirm whether further reductions in contaminant concentrations are being achieved;

- Monitor the upper groundwater aquifer outside of the Former Process Area and the lower aquifer to ensure that contaminant levels are not increasing. If necessary, institutional controls will be established to ensure that these groundwater aquifer areas remain unused until protective levels are reached through natural attenuation[8];

- If full-scale thermal treatment does not remediate the surface soil in the Former Process Area

[8] EPA will monitor for decreasing trends of contaminant levels in these aquifer areas.

to MTCA cleanup standards, then implement a combination of actions which may include a soil cap, institutional controls, or other measures integrated into the future site use to ensure long-term human health and environmental protection.

- If full-scale thermal treatment does not remove substantially all mobile non-aqueous phase liquid (NAPL) and if thermal treatment does not reduce the concentrations of polynuclear aromatic hydrocarbons (PAHs) and pentachlorophenol (PCPs) in groundwater such that the need for a long-term remediation is eliminated, then the sheet pile wall may be cut off at the mudline, but will remain in the ground, and pumping and treating will be continued for additional years. The purpose of this action will be to contain the contaminants within the sheet pile wall area.

- Establish institutional controls for the upper aquifer groundwater within the Former Process Area to reduce the potential for human exposure to contaminants that may remain after thermal treatment. As described in Section 6.4.1, this portion of the upper aquifer will not be used as a potable water supply. The institutional controls will be necessary to assure that the upper aquifer beneath the Former Process Area remains unused;

The current estimated time for cleanup is approximately 1 to 2 years for the pilot study; 2-3 years of full-scale steaming plus 2-5 additional years of ongoing contaminant extraction plus 2 final years of monitoring[9]. However, since biodegradation and oxidation would continue to occur beyond this active remediation schedule, it is anticipated that the restoration timeframe for the site would continue for an additional 5 or more years.

The time line for the thermal remediation project is as follows:

Phase	Time Frame	Years
Pilot Study[a]	1-2 years	2000 - 2002
Full-Scale Designs[b]	1 year	2002
Full-Scale System Construction	1 year	2003
Full-Scale System On-Line		2004
Steam Injection & Contaminant Recovery	3 years	2004 - 2007
Continued Contaminant Recovery	5 years	2007 - 2012
Full-Scale Cleanup Completed		2012
Post-Remedial Monitoring	2 years	2012 - 2014
Ongoing Natural Oxidation/Biodegradation	5 or more years	2014 and beyond

[9] The cleanup timeframe estimates are conservative, however, they do not include 1 year to design and construct the pilot system and 1½ years to design and construct the full-scale cleanup system. For cost estimating purposes, the larger time frame was used.

[a] Stake-holders and interested parties will have opportunities to provide input during the designs and operation of the pilot study, and will have access to the data generated during the pilot study.

[b] If results of the pilot are favorable after the 1st year of operation, then the designs for the full-scale remediation system can commence.

Below is a flow chart detailing the remedial steps and how EPA will be making cleanup decisions based upon the outcome of performance data.

12.2 Expected Outcomes of the Selected Remedy

If successful, thermal remediation could provide permanent protection to human health and the environment. This alternative could remove substantially all mobile NAPL, the principle threat, to achieve long-term protection of human health and the environment and compliance with ARARs. If successful, this alternative would be cost-effective.

The more aggressive cleanup of the property should permit greater subsequent land re-use flexibility. This may include, but not limited to, residential use for large portions of the Wyckoff property. The upper-aquifer groundwater within the Former Process Area may not have high reusability due to the saline levels, however, the other groundwater components (the Former Log Storage/Peeler Area groundwater and the lower aquifer) may have future re-use potential over time.

The containment alternatives, which require some kind of a barrier wall and permanent pump-and-treat system to prevent migration into Eagle Harbor, would not result in significant reductions in toxicity, mobility or volume of the principal threat at the site, would require an ongoing long-term remediation presence, and pose a higher risk of failure in the long-term.

12.3 Issues to be Addressed During the Design Phase of the Selected Remedy

Several elements of the remedy will be evaluated during design. These elements are:

Water Supply

EPA will evaluate the option of using water from the City of Bainbridge Island's sewage treatment plant effluent to generate steam. EPA currently anticipates that a maximum of 200 gallons per minute (gpm) of water would be needed during full-scale thermal remediation. Currently, only a handful of possible water sources have been identified for use at Wyckoff: (1) drilling a deep well at Wyckoff to supply clean groundwater, (2) City of Bainbridge Island sewage treatment plant effluent, (3) desalinated water from Puget Sound, and (4) demineralized and decontaminated groundwater from the contaminated aquifer at Wyckoff. There are potential drawbacks to each of these alternatives. A deep well may not have enough capacity to meet the anticipated 200 gpm need, and pumping this much water from the lower, potable aquifer could potentially have negative impacts to other water wells in the community. The city’s treatment plant is on the opposite side of Eagle Harbor from the Wyckoff site. As a result, the water would need to be piped under or around the harbor. Ferry and other boat traffic may make installing an underwater pipeline impossible or cost-prohibitive. The total length, access, as well as right-of-way issues may make installing a pipeline around the harbor impossible or cost-prohibitive. Desalinating or demineralizing water from the sound or the brackish upper aquifer may be cost-prohibitive. EPA will further evaluate all of these alternatives during remedial design of the pilot study and after, as appropriate.

Sheet Pile Driving Noise Abatement

A preliminary review of noise abatement technology revealed that there are currently no standard methods or off-the-shelf equipment available for noise abatement of pile-driving activities. During remedial design, EPA will conduct a more thorough evaluation. EPA will explore the following avenues, which may have some effect in lowering noise levels in the site vicinity:

- Proper selection of sheet pile driving equipment
- Regular maintenance and repair of engine and vibrator enclosures, insulation, and mufflers
- Orientation and arrangement of equipment
- Management of work schedules
- Sound barriers such as work area enclosures or acoustic blankets
- Consulting with an industrial noise control expert

The sheet pile wall construction will take place during the winter months. EPA currently estimates that it will take up to four months to complete the sheet pile wall construction.

System Operation Noise and Air Emission Abatement

Noise related to a thermal remediation at Wyckoff is also of concern to EPA. There will be several sources of noise above current background levels at Wyckoff. These sources may include:

- Truck and barge traffic delivering construction and operations equipment and supplies
- Steam boiler noise
- Steam traveling through pipes
- Pumps moving extracted materials from the wells to the treatment plant

EPA will examine the noise issue during operation of the pilot study and during design of the full-scale remediation system. Both administrative and engineering controls will be evaluated to reduce noise levels at the site. Some controls may include:

- Limiting vehicle traffic to daylight hours and non-rush-hour times
- Delivering steam boiler fuel by barge
- Containing the steam boiler in a building
- Insulating steam pipes
- Enclosing pumps in buildings or vaults

Air emissions are another concern for EPA. While the purpose of any cleanup action at Wyckoff is to protect human health and the environment, the cleanup should not trade environmental damage in one media (e.g., sediments or groundwater) for another (e.g., air quality). As a result, EPA will further evaluate the air emissions issue operation of the pilot study and during design of the full-scale remediation system. Steam generation will be performed using the most appropriate fuel source and steam boilers available to meet project requirements as well as applicable air

pollution regulations. Several methods that may prevent releases of vapors from creosote and other site contaminants will be evaluated during operation of the pilot study and during design of the full-scale remediation system. These methods include but are not limited to:

- Use of low-sulfur diesel fuel oil with efficiently running steam boilers.
- Installation of steam boiler off-gas treating equipment to further reduce nuisance odors.
- Use of an appropriate vapor cap with vapor collection pipes that would prevent heated vapors from escaping from the subsurface. The vapors would be collected in the pipes and routed to the treatment plant for remediation.
- Use of heat exchangers to cool contaminated liquids and vapors, reducing the amount of contamination that is likely to be released to the air .
- Use of covered process equipment and enclosed tanks so that contaminated liquids are not directly exposed to the ambient air.
- Control of contaminated vapors in the air to ensure levels are not harmful to people at or near the site.

Location of the Pilot Study

The location of the pilot study is important to gain both performance data on the use of thermal technologies at the Wyckoff site and to address specific engineering issues. An evaluation of site characteristics and discussions with thermal experts led to an examination of two potential pilot study locations.

The criteria for selecting these sites will focus on the following characteristics:

- The area should have ample quantities of both LNAPL and DNAPL.

- The area should be adjacent to the southern boundary of NAPL contamination to allow clean up-gradient groundwater to flow into the study location after heating. The flow of clean groundwater into the study area is important for the evaluation of post-heating oxidation and enhanced natural attenuation of contaminants.

- The area should be near the shoreline to allow EPA to monitor thermal effects in adjacent marine habitats.

The areas on the southwest and southeast corners of the former process area (Figure 13) fulfill these broad criteria. Each location presents both advantages and disadvantages as a final Pilot Study location that will need to be evaluated during design.

The southeast area (Area A), near the groundwater treatment plant contains soils highly saturated with both LNAPL and DNAPL. In addition, the geology of the area includes marine sands and gravel along with cobble zones, which will aid in the evaluation of engineering issues such as proper well screening intervals. This area is also adjacent to an intertidal zone, which will allow

EPA to monitor the effects of thermal remediation on marine habitats. The major disadvantage of this location is that the southern extent of NAPL contamination near the treatment plant is not well defined and will need to be investigated before the specific location can be determined.

The southwestern corner of the site (Area B), near the asphalt pad, also meets the broad screening criteria. The advantage of this site is that the southern extent of NAPL contamination is fairly well determined. However, the geology of this area is dominated by non-marine clay fill material, which may make it difficult to evaluate the use of steam injection. Conversely, the presence of clayey fill is amenable to a more thorough evaluation of electrical heating. Disadvantages of the area include far less LNAPL than the area close to the treatment plant and no adjacent intertidal habitat in which to monitor thermal effects.

The thermal remediation experts on EPA's In-Situ Thermal Technologies Advisory Panel (ITTAP) tended to favor locating the Pilot Study in the area on the southeast corner (Area A) of the site with the recognition that the extent of NAPL under the treatment plant will be evaluated. However, it is possible that either potential pilot study locations may turn out not to be the optimal location. If this is the case, EPA will evaluate other options, including an area between the two locations, A and B.

Clean Water Act Section 404(b)(1) Analysis

EPA gave consideration to several technologies in the development of a suitable remedy. Prior to evaluating the selected remedy, EPA seriously considered the construction of a barrier wall (slurry wall) because it represented the most protective containment remedy at the time (Alternative 2a). Through the development of Alternative 2a, EPA reviewed design criteria and made all efforts to minimize impacts to the aquatic environment. However, because of site characteristics and construction constraints, Alternative 2a would require the loss of 2 to 3 acres of aquatic habitat.

When EPA re-evaluated the alternatives, it was determined that the selected remedy greatly minimized impacts to the aquatic environment. The current design of the sheet pile wall would impact approximately 0.6 to 0.9 acres of aquatic habitat around the immediate perimeter of the property. EPA will also evaluate the removal or partial removal of the protective sheet pile wall upon completion of thermal treatment. This will assist in restoring the perimeter shoreline to more natural conditions.

EPA and the Natural Resource Agencies (the Washington State Department of Ecology, Department of Natural Resources, Department of Fish and Wildlife, the National Marine Fisheries Service, the U.S. Fish and Wildlife Service) and the Suquamish Tribe have also developed a conceptual compensatory mitigation proposal to offset temporary and permanent losses. The proposal includes a re-shaping of a portion of the western shoreline to increase the area of intertidal slope and remove old failing bulkheads (see Sheet Pile Mitigation Requirements, below, for more information).

EPA's complete evaluation and findings regarding this project pursuant to Section 404 of the Clean Water Act will be completed post-ROD and will be placed in the site's Administrative Record.

Sheet Pile Mitigation Requirements

As stated above, the current estimate of impact from the sheet pile wall is between 0.6 and 0.9 acres of temporary and/or permanent loss of intertidal habitat. Pursuant to the Clean Water Act Section 404(b)(1), the purpose of mitigation is to offset adverse impacts to the aquatic environment from the sheet pile wall, including construction. The final impact of habitat loss from installation of the sheet pile wall will be fully evaluated during the design phase of the project. Remaining issues include assessing the total area impacted and a final determination of the type of permanent or temporary habitat loss to the marine environment. Once the extent of habitat impact is determined, a mitigation plan will be developed. The objective of this mitigation strategy will be to modify the western shoreline to increase and support habitat for baitfish spawning (surf smelt) and salmonids (juvenile chinook). This will include creating a gently sloping beach (no steeper than 1:6) with sand and pea gravel across potions of the western shore. The beach will be created through a combination of cutting back the existing shoreline and adding fill material to the existing intertidal/subtidal area to achieve the 1:6 slope. The grain sizes will be tiered so that finer grained material will be along the upper beach, coarser grained material in the mid-tidal ranges and finer grained materials in the subtidal.

EPA is also coordinating with the National Marine Fisheries Service (NMFS) to develop a Biological Assessment (BA) for the Wyckoff/Eagle Harbor site-wide remediation, as required by the Federal Endangered Species Act.

Thermal Remediation of Dioxins/Furans

A steam injection experiment was performed in a laboratory study to assess whether polychlorinated dioxins and furans can be recovered from the soil by steam injection. The results of this experiment show that significant reductions in the dioxin concentrations may not be possible by steam injection due to its low vapor pressures. Since vaporization is the main recovery mechanism in these laboratory experiments, significant recovery of these very low vapor pressure compounds would not be possible. However, optimal use of different recovery mechanisms in the field, such as mobilization/recovery in the liquid phase, may aid in removing more of the dioxins than were recovered in the lab.

EPA will further evaluate the remediation of dioxins and furans by thermal means during the on-site pilot study. Contingencies such as a surface soil cap or institutional controls will be developed to address this area of uncertainty.

13. STATUTORY DETERMINATIONS

Based on information currently available, EPA believes the Preferred Alternative provides the best

balance of tradeoffs among the other alternatives with respect to the evaluation criteria. The preferred alternative best satisfies the following statutory requirements in CERCLA Section 121(b): (1) be protective of human health and the environment; (2) comply with ARARs; (3) be cost-effective; (4) utilize permanent solutions; and (5) satisfy the preference for treatment as a principal element.

Under CERCLA Section 121 and the NCP, the lead agency must select remedies that are protective of human health and the environment, comply with applicable or relevant and appropriate requirements, are cost-effective, and utilize permanent solutions and alternative treatment technologies or resource recovery technologies to the maximum extent practicable. In addition, CERCLA includes a preference for remedies that employ treatment that permanently and significantly reduces the volume, toxicity, or mobility of hazardous substances as a principal element and a bias against off-site disposal of untreated wastes. The following sections discuss how the Selected Remedy meets these statutory requirements.

13.1 Protection of Human Health and the Environment

The Selected Remedy, Alternative 3, will protect human health and the environment through the treatment of NAPL-contaminated soil and groundwater by in-situ thermal treatment, with a contingency of containment if RAOs are not met following remediation. The Selected Remedy actively treats the soil and groundwater by removing mobile NAPL (the principal threat) from the site. This remedy will reduce the threat of exposure to the most mobile chemicals of concern via direct contact or ingestion of soil, and exposure to groundwater and NAPL by marine organisms.

Once thermal treatment is completed, the vapor cap will be removed, and the sheet pile wall either removed, remain as is, or cut off at the mudline.

Because the principal threat will be removed, treated, and incinerated, the risks posed by the soil and groundwater at the Wyckoff site will be reduced. The combination of treatment, oxidation, and biodegradation may achieve ARAR levels within a reasonable timeframe.

If thermal treatment cannot achieve the cleanup levels for soil and groundwater, then the contingency of soil cap and containment with a sheet pile wall will be protective of human health and the environment because the exposure pathways will be removed.

Implementation of this remedy may create neighborhood disturbances such as noise levels, odors, increased traffic, and heat effects to Eagle Harbor, however, measures will be taken to minimize any short term impacts.

13.2 Compliance with Applicable or Relevant and Appropriate Requirements (ARARs)

The Selected Remedy will comply with all Federal and State applicable or relevant and appropriate requirements. EPA will develop alternate concentration limits (ACLs) for the Wyckoff groundwater (see Section 8.3.2). The goals of the ACLs are to meet State and Federal marine water quality standards/criteria, surface water standards for human consumption of organisms, and to protect marine sediments. The point of compliance for ACLs is at the mudline.

The ARARs are as follows:

State of Washington Model Toxics Control Act

(WAC 173-340-360(4)	This section is applicable for identifying the order of preference of cleanup technologies, including treatment as the highest preference.
(WAC 173-340-360(5)(d)	This section is applicable for identifying the state's preference for permanent solutions to the maximum extent practicable.
(WAC 173-340-360(6)	This section is applicable for selecting a cleanup that provides for a reasonable restoration time frame and identifying factors to be considered when establishing that time frame.
(WAC 173-340-440)	This section is applicable for requiring institutional controls where active cleanup measures (e.g., treatment) will not attain MTCA cleanup levels or where a cap is used to contain contaminants above MTCA cleanup levels.
(WAC 173-340-720)	This section is applicable for setting groundwater cleanup standards including points of compliance.
(WAC 173-340-730)	This section is applicable for setting surface water cleanup standards including points of compliance.
(WAC 173-340-740)	This section is applicable for setting soil cleanup standards including points of compliance.

State of Washington Dangerous Waste Regulations (WAC 173-303)

This is applicable to the treatment, storage or disposal of solid wastes which are dangerous or extremely hazardous to the public health and the environment. Sludges, NAPL, tank bottom sediments, and spent carbon will be disposed off-site.

Resource Conservation and Recovery Act (40 CFR 261, 264, and 268)

(40 CFR 261)	This applies to the identification of hazardous wastes. The NAPL and the treatment plant waste streams (sludges, tank bottom sediments, and spent carbon) are listed hazardous wastes.
(40 CFR 264 Subpart X)	Treatment of Hazardous Waste - This is applicable to treatment process units which must be located, designed, constructed, operated, and closed in a manner that will ensure protection of human health and the environment. These requirements are not applicable to the on-site treatment plant, which is excluded under the wastewater treatment unit exclusion (40 CFR 264.1(g)(6)).
(40 CFR 264 Subpart BB)	Air Emission Standards for Equipment Leaks - This is applicable to equipment to prevent organic emissions from leaking to the atmosphere.
(40 CFR 264.1080 and 265.1080 Subpart CC)	Air Emission Standards for Tanks, Surface Impoundments and Containers - This is relevant and appropriate to tanks, containers, surface impoundments, etc., that manage volatile hazardous waste.
(40 CFR 268)	Land Disposal Restrictions - This is applicable to the land disposal of listed or characteristic hazardous waste materials disposed off-site.

Off-site Disposal Rule (40 CFR § 300.440)

Wastes being treated or disposed off-site may only go to facilities that are in compliance with EPA's Off-site Rule.

Federal Water Pollution Control Act/Clean Water Act (33 USC 1251-1376; 40 CFR 100-149)

Acute marine criteria are applicable requirements for discharge to marine surface water via the groundwater treatment plant outfall. They are also relevant and appropriate for the discharge of groundwater to surface water at the mudline.

Federal Clean Water Act Dredge and Fill Requirements; Sections 401 and 404 (33 USC 401 et seq.; 33 USC 1413; 40 CFR 230, 231; 33 CFR 320-330)

These regulations are applicable to the discharge of dredged or fill material to waters of the U.S. The 404(b)(1) evaluation will be completed for the construction of the sheet pile wall and will comply with the requirements.

Rivers and Harbors Appropriations Act (33 USC 403; 33 CFR 322)

Section 10 of this act establishes permit requirements for activities that may obstruct or alter a navigable waterway; activities that could impede navigation and commerce are prohibited. These substantive permit requirements are anticipated to be applicable to remedial actions, such as construction of the sheet pile wall and shoreline reconstruction.

National Pollutant Discharge Elimination System (WAC 173-220)

The Washington State NPDES program provides conditions for authorizing direct discharges to surface waters and specifies point source standards for such discharges. The substantive NPDES standards are applicable to discharges to surface waters by the groundwater treatment plant. Substantive discharge standards have been developed for the existing treatment plant and, with some modifications, will also be applicable to the thermal pilot study treatment system. The modified NPDES standards are described in Table 25.

State of Washington Water Quality Standards for Surface Waters (WAC 173-201A)

Standards for the protection of surface water quality have been established in Washington state. The standards for marine waters will be applicable to discharges to surface water from the groundwater treatment plant and relevant and appropriate to the groundwater discharge to surface water.

State of Washington Sediment Management Standards (WAC 173-204)

Chemical concentration and biological effects criteria are established for Puget Sound sediments and are applicable such that discharges from the groundwater at Wyckoff should not cause exceedances of PAH and PCP standards in sediments (see Tables 13 and 15).

Safe Drinking Water Act/National Primary Drinking Water Regulations (40 CFR 141)

The federal primary drinking water standards, adopted by the State of Washington, set maximum contaminant levels (MCLs), which are the maximum permissible levels of contaminants in drinking water based on the prevention of adverse health effects. Large portions of the upper aquifer at Wyckoff is nonpotable due to high salinity levels, however, MCLs are relevant and appropriate to the lower aquifer, a potential future source of drinking water.

Clean Air Act

Prevention of Significant Deterioration (PSD) of Air Quality (40 CFR Part 52.21) provisions for prevention of significant deterioration of air quality in any portion of any State where the existing air quality is better than the national ambient air quality standards (NAAQS). This regulation is applicable if the potential to emit exceeds 250 tons per year or more of any air pollutant subject to regulation under the Act. If it is determined during remedial design that emissions will exceed the threshold levels for each pollutant, different fuel types will be evaluated.

The Standards of Performance for New Stationary Sources (40 CFR Part 60) provisions for Small Industrial-Commercial-Institutional Steam Generating Units (Subpart Dc) are applicable. This regulation provides limitations for particulate matter and sulfur dioxide emissions. An evaluation will be conducted during remedial design to determine if emissions will exceed the threshold levels for each pollutant.

The National Emission Standards for Hazardous Air Pollutants (NESHAP) (40 CFR Part 63) regulated specific categories of stationary sources that emit (or have the potential to emit) one or more hazardous air pollutants list in this part pursuant to section 112(b) of the Act. This regulation is applicable, however, an evaluation will be conducted during remedial design to determine if emissions will exceed the threshold levels for each pollutant.

Regulations I and III of the Puget Sound Air Pollution Control Agency (WAC 173-400 and 460)

Regulation I establishes technically feasible and reasonably attainable standards that are generally applicable to the control and/or prevention of the emission of air contaminants. Specific provisions will apply to the steam boiler and treatment system.

Regulation III is applicable to the steam boiler and treatment system if they emit a Class A or Class B toxic air pollutant into the ambient air (WAC 173-460-030(2)(b)). The regulation establishes acceptable source impact levels (ASILs) for toxic air pollutants emitted from new or modified sources to prevent air pollution, reduce emissions to the extent reasonably possible, and maintain such levels of air quality to protect human health and the environment.

Oil Pollution Control Act of 1990 (OPA)

(33 CFR Part 154)	Facilities Transferring Oil or Hazardous Materials in Bulk - This is applicable to Wyckoff, which is anticipated to be receiving bulk shipment of fuel from a vessel with a capacity of 250 barrels (10,500 gallons) or greater.
(WAC 173-180A, B, C, D)	Establishes minimum performance standards for oil transfer, storage and monitoring activities; Requires the preparation and implementation of a Facility Oil-Handling Operations Manual for onshore and offshore facilities (i.e., loading dock and pipeline); Requires the development, approval, and implementation of personnel oil-handling training and certification programs for onshore and offshore facilities; Requires development of an Oil Spill Prevention Plan. The substantive requirements are applicable to the delivery of fuel from barges to the site.

Federal Endangered Species Act of 1973 (16 USC 1531 et seq.; 50 CFR 200, 402)

This regulation is applicable to any remedial action performed at this site since this area is potential habitat for threatened and/or endangered species. The special species of concern for the Wyckoff site and surrounding marine habitats include Puget Sound Chinook, bull trout, Stellar sea lion, bald eagle, and marbled murrelet.

U.S. Fish and Wildlife Coordination Act (16 USC 661 et seq.)

Eagle Harbor provide potential habitat for the species identified above and used as a salmonid migratory route. This act prohibits water pollution with any substance deleterious to fish, plant life, or bird life, and requires consultation with the U.S. Fish and Wildlife Service and appropriate state agencies. Criteria are established regarding site selection, navigational impacts, and habitat remediation. These requirements are applicable for remedial activities on the site.

Construction in State Waters, Hydraulic Code Rules (RCW 75.20; WAC 220-110)

Hydraulic project approval and associated requirements for construction projects in state waters have been established for the protection of fish and shellfish. Substantive permit requirements are applicable to the construction of the sheet pile wall. The technical provisions and timing restrictions of the Hydraulic Code Rules are also applicable to construction of the sheet pile wall and shoreline modifications associated with habitat mitigation activities.

Shoreline Management Act (RCW 90.58, WAC 173-14); Coastal Zone Management Act (16 USC 1451 et seq., 15 CFR 923); *Kitsap County Shoreline Management Program (WAC 173-19-2604); City of Bainbridge Shoreline Management Regulations*

These statutes and regulations are applicable for construction of the sheet pile wall, which will be along the shoreline area of Wyckoff, and shoreline modifications associated with habitat mitigation activities.

Minimum Standards for Construction and Maintenance of Water Wells (WAC 173-160)

Well construction regulations establish minimum standards for water well construction . This regulation will be applicable to monitoring well construction, steam injection well construction/action, and if EPA decides to install a water well for steam generation. This regulation is also applicable to the decommissioning of wells.

Underground Injection Control Program (WAC 173-218)

This regulation is applicable to the steam injection wells necessary for thermal remediation.

Minimum Functional Standards for Solid Waste Handling (WAC 173-304)

As part of the selected remedy, if thermal remediation does not fully remediate the surface soil in the Former Process Area to MTCA cleanup levels, then a contingency will be employed which may include a soil cap. This regulation would then be relevant and appropriate.

General Regulations for Air Contaminant Sources (WAC 173-400)

This regulation requires Best Management Practices to be employed including covering stock piles, cleaning of trucks prior to leaving the site, and monitoring air emissions. This will be applicable during remedial action at Wyckoff.

TBCs (To Be Considered)

TBC items are state and local ordinances, advisories, guidance documents or other requirements that, although not ARARs, may be used in determining the appropriate extent and manner of cleanup. Generally, TBC requirements are used when no federal or state requirements exist for a particular situation.

A TBC for the Wyckoff Soil and Groundwater remediation is the City of Bainbridge Island's Title 16 Environment, Chapter 16.16 Noise Regulations. EPA intends to notify and coordinate with the Office of Planning and Community Development regarding the construction of the sheet pile wall and the thermal system operation.

13.3 Cost-Effectiveness

The Selected Remedy is cost effective. In making this determination, the following definition was used: "A remedy shall be cost-effective if its costs are proportional to its overall effectiveness." (NCP §300.430(f)(1)(ii)(D)). This was accomplished by evaluating the "overall effectiveness" of those alternatives that satisfied the threshold criteria (i.e., were both protective of human health and the environment and ARAR-compliant). Overall effectiveness was evaluated by assessing three of the five balancing criteria in combination (long-term effectiveness and permanence; reduction in toxicity, mobility, and volume through treatment; and short-term effectiveness). Overall effectiveness was then compared to costs to determine cost-effectiveness.

The pilot study (Phase I) creates an opportunity to proceed with Phase II (full-scale cleanup) only if reasonable cost-benefit can reasonably be predicted.

The estimated present worth cost for the Selected Remedy is $41,479,143. Although Alternative 2b, Containment with a Sheet Pile Wall, is estimated to be approximately $13 million dollars less expensive, treatment and removal of the principal threat contaminants are not addressed, and the containment cost estimates only represent a time frame of 30 years. As discussed above, containment has long-term operation and maintenance costs as well as future capital system replacement costs. The Selected Remedy may eliminate these costs.

EPA believes that the Selected Remedy's additional costs for treatment and removal of contaminants may provide a significant increase in long-term protection of human health and the environment and is protective.

13.4 Utilization of Permanent Solutions and Alternative Treatment (or Resource Recovery) Technologies to the Maximum Extent Practicable

EPA has determined that the Selected Remedy, an innovative treatment technology, represents the maximum extent to which permanent solutions and treatment technologies can be utilized in a practicable manner at the site. The Selected Remedy treats the upland source materials constituting principal threats at the site, achieving significant reduction in NAPL volume in soil and groundwater. All NAPL recovered will be incinerated and the contaminated groundwater and vapors treated on-site. Approximately 1,000,000 gallons of NAPL still remain in the subsurface at this site. To date, approximately 88,700 gallons have been removed by pump-and-treat mechanisms and incinerated.

As discussed above, EPA will implement the Selected Remedy in two phases, with an on-site pilot study as the first phase. If the pilot study is successful at meeting performance expectations, then the full-scale cleanup will be employed. However, if the pilot is not successful, then the contingent remedy, Alternative 2b, will be implemented. The contingent remedy will then represent the maximum extent to which permanent solutions and treatment technologies can be utilized in a practicable manner at this site.

13.5 Preference for Treatment as a Principal Element

By utilizing treatment as a significant portion of the remedy, the statutory preference for remedies that employ treatment as a principal element is satisfied.

13.6 Five-Year Review Requirements

Because this remedy may result in hazardous substances, pollutants, or contaminants remaining at the site, a statutory review will be conducted within five years after initiation of remedial action to ensure that the remedy is, or will be, protective of human health and the environment.

13.7 Documentation of Significant Changes from Preferred Alternative of Proposed Plan

The Proposed Plan for the Wyckoff site was released for public comment in October 1999. The Proposed Plan identified Alternative 3, Thermal Remediation, as the Preferred Alternative for soil and groundwater remediation. EPA reviewed all written and verbal comments submitted during the comment period. It was determined that no significant changes to the remedy, as originally identified in the Proposed Plan, were necessary or appropriate.

TABLES

This page intentionally blank.

Table 1

Summary of Chemicals Detected in the Near-Surface (0-4 feet bgs) Former Process Area and Log Storage/Peeler Area Soil

Chemical Name	Number of Detections	Number of Samples	Minimum Detected Concentration (µg/kg)	Maximum Detected Concentration (µg/kg)	Average Detected Concentration (µg/kg)
PAHs:					
benzo(a)anthracene	34	238	720	220,000	25,239
benzo(a)pyrene	68	238	640	370,000	18,642
benzo(b&k)fluoranthene	64	188	1,150	550,000	26,320
benzo(b)fluoranthene	6	50	550	8,690	3,537
benzo(k)fluoranthene	4	50	510	3,100	1,728
chrysene	66	238	470	400,000	28,637
dibenz(a,h)anthracene	19	238	600	28,000	4,234
indeno(1,2,3-cd)pyrene	42	238	600	100,000	7,089
Phenols:					
pentachlorophenol	49	238	16.6	35,000	3,700
Dioxins/Furans:					
dioxin (2,3,7,8-TCDD)/tef	19	20	0.000295	1.1244	0.22

Table 2

Summary of Chemicals Detected in the Subsurface (5-7 feet bgs)
Former Process Area and Log Storage/Peeler Area Soil

Chemical Name	Number of Detections	Number of Samples	Minimum Detected Concentration (µg/kg)	Maximum Detected Concentration (µg/kg)	Average Detected Concentration (µg/kg)
PAHs:					
benzo(a)anthracene	38	228	410	310,000	30,676
benzo(a)pyrene	43	228	430	73,000	13,521
benzo(b&k)fluoranthene	31	182	340	140,000	28,911
benzo(b)fluoranthene	3	46	445	27,000	9,415
benzo(k)fluoranthene	1	46	9,600	9,600	9,600
chrysene	47	228	555	290,000	20,536
dibenz(a,h)anthracene	19	228	600	4,950	1,954
indeno(1,2,3-cd)pyrene	34	228	595	15,000	4,797
Phenols:					
pentachlorophenol	16	224	110	440,000	39,820
BNAs:					
carbazole	12	27	6.5	167,000	26,286
Dioxins/Furans:					
dioxin (2,3,7,8-TCDD)/tef	11	14	0.00002	3.226	0.47

Table 3

Summary of Chemicals Detected in the Near-Surface (0-4 feet bgs) Soil in the Vicinity of Well CW01 Area

Chemical Name	Number of Detections	Number of Samples	Minimum Detected Concentration (µg/kg)	Maximum Detected Concentration (µg/kg)	Average Detected Concentration (µg/kg)
Fill Materials					
benzo(a)anthracene	3	4	136.5	282	204.5
benzo(a)pyrene	4	4	93.8	290	208.575
benzo(b)fluoranthene	4	4	205	695	464.25
benzo(k)fluoranthene	4	4	77.8	216	162.45
chrysene	4	4	120	511	301.625
indeno(1,2,3-cd)pyrene	4	4	93.3	327	213.95
dioxin (2,3,7,8-TCDD)/tef	1	1	0.107663	0.107663	0.107663
Native Soil					
benzo(a)anthracene	1	4	330	330	330
benzo(a)pyrene	4	4	13.9	330	100.75
benzo(b)fluoranthene	4	4	43.6	850	264.9
benzo(k)fluoranthene	4	4	15.2	288	87.125
chrysene	3	4	24	621	246.9
indeno(1,2,3-cd)pyrene	4	4	11.9	345	100.3

Table 4

Summary of Dissolved-Phase Chemicals Detected in Upper-Aquifer Groundwater

Chemical Name	Number of Detections	Number of Samples	Minimum Detected Concentration (µg/L)	Maximum Detected Concentration (µg/L)	Average Detected Concentration (µg/L)
PAHs:					
acenaphthene	30	40	0.022	21,500	2,162.983
anthracene	32	40	0.083	5,350	607.950
benzo(a)anthracene	17	38	3	1,700	364.029
benzo(a)pyrene	19	37	0.058	240	72.066
benzo(b)fluoranthene	20	38	0.091	1,300	194.305
benzo(k)fluoranthene	17	37	0.033	520	78.044
chrysene	24	38	0.058	1,400	211.235
dibenz(a,h)anthracene	2	36	9.8	17.1	13.450
fluoranthene	32	40	0.046	17,000	1,402.447
fluorene	30	40	0.092	17,500	2,035.840
indeno(1,2,3-cd)pyrene	4	36	7	42.75	23.538
naphthalene	32	40	3.2	130,000	15,196.341
pyrene	32	40	0.037	5,000	609.450
Phenols:					
pentachlorophenol	14	38	12.4	16,000	2,096.993
trichlorophenol, 2,4,6-	2	36	22	37	29.500
Volatile Organics:					
benzene	11	40	3	57	15.164
carbon tetrachloride	1	40	2.3	2.3	2.300
dichloroethane, 1,2-	1	40	4	4	4.000
ethylbenzene	30	40	0.21	784.5	170.636
styrene	1	40	333	333	333.000

BNAs:					
bis(2-ethylhexyl)phthalate	10	38	1	12,000	1,249.630
carbazole	29	40	0.043	3,850	419.411
dimethylphenol, 2,4-	11	37	0.46	360	105.605
methylphenol, 4-	12	39	2	240	32.844

Table 5

Summary of Chemicals Detected in Lower-Aquifer Groundwater

Chemical Name	Number of Detections	Number of Samples	Minimum Detected Concentration (µg/L)	Maximum Detected Concentration (µg/L)	Average Detected Concentration (µg/L)
PAHs:					
benzo(a)anthracene	2	13	0.85	1.8	1.325
benzo(a)pyrene	6	13	0.15	0.38	0.272
benzo(b)fluoranthene	6	13	0.32	0.73	0.490
benzo(k)fluoranthene	6	13	0.11	0.33	0.200
chrysene	6	13	0.38	2	0.882
fluoranthene	5	13	0.34	29.7	13.188
naphthalene	8	13	0.25	1,403.95	328.439
Phenols:					
pentachlorophenol	4	13	1.5	18.5	8.125
Volatile Organics:					
carbon tetrachloride	2	13	1	1.3	1.150
BNAs:					
bis(2-ethylhexyl)phthalate	4	13	2.9	32	10.975
carbazole	5	13	0.057	37.4	12.106

Table 6

Summary of Chemicals Detected in LNAPL

Chemical Name	Number of Detections	Number of Samples	Minimum Detected Concentration (µg/L)	Maximum Detected Concentration (µg/L)	Average Detected Concentration (µg/L)
PAHs:					
acenaphthene	5	5	9,000,000	36,000,000	24,400,000
acenaphthylene	4	5	190,000	540,000	365,000
anthracene	4	5	3,500,000	4,700,000	4,225,000
benzo(a)anthracene	5	5	1,200,000	5,800,000	2,420,000
benzo(a)pyrene	5	5	360,000	1,700,000	716,000
benzo(b)fluoranthene	5	5	600,000	3,200,000	1,316,000
benzo(g,h,i)perylene	3	5	140,000	450,000	246,667
chrysene	5	5	1,100,000	4,400,000	2,000,000
fluoranthene	5	5	6,200,000	23,000,000	13,160,000
fluorene	5	5	6,100,000	20,000,000	11,920,000
indeno(1,2,3-cd)pyrene	3	5	150,000	550,000	286,667
naphthalene	5	5	22,000,000	220,000,000	134,400,000
phenanthrene	5	5	14,000,000	64,000,000	35,200,000
pyrene	5	5	3,900,000	19,000,000	8,100,000
Phenols:					
pentachlorophenol	3	5	920,000	1,100,000	1,040,000
Volatile Organics:					
acetone	2	5	390,000	2,900,000	1,645,000
ethylbenzene	3	5	650,000	1,600,000	1,083,333
methylene chloride	5	5	99,000	20,000,000	4,553,800
toluene	3	5	310,000	1,000,000	666,667
xylene, mixture	3	5	1,000,000	6,000,000	3,066,667
BNAs:					

bis(2-ethylhexyl)phthalate	1	5	170,000	170,000	170,000
carbazole	4	4	820,000	4,364,000	2,371,000
dibenzofuran	5	5	6,000,000	25,000,000	14,400,000
methylnaphthalene, 2-	5	5	8,200,000	89,000,000	56,040,000
Dioxins/Furans:					
heptachlorinated dibenzo- p-dioxins, (total)	1	1	10	10	10
octachlorodibenzo-p-dioxin	1	1	26	26	26

Table 7

Summary of Chemicals Detected in DNAPL

Chemical Name	Number of Detections	Number of Samples	Minimum Detected Concentration (µg/L)	Maximum Detected Concentration (µg/L)	Average Detected Concentration (µg/L)
PAHs:					
acenaphthene	7	7	130,000	56,000,000	18,861,429
acenaphthylene	6	7	20,000	760,000	336,667
anthracene	5	7	700,000	4,600,000	2,740,000
benzo(a)anthracene	6	7	71,000	4,800,000	2,333,500
benzo(a)pyrene	6	7	20,000	1,300,000	650,000
benzo(b)fluoranthene	6	7	33,000	2,500,000	1,277,167
benzo(g,h,i)perylene	2	7	6,000	340,000	173,000
chrysene	6	7	62,000	3,600,000	1,875,333
fluoranthene	6	7	1,200,000	40,000,000	16,350,000
fluorene	7	7	150,000	50,000,000	13,721,429
indeno(1,2,3-cd)pyrene	1	7	6,000	6,000	6,000
naphthalene	7	7	480,000	210,000,000	74,368,571
phenanthrene	7	7	890,000	110,000,000	34,484,286
pyrene	7	7	230,000	15,000,000	7,072,857
Phenols:					
pentachlorophenol	1	7	750,000	750,000	750,000
Volatile Organics:					
chloroethylvinylether, 2-	1	4	400,000	400,000	400,000
ethylbenzene	2	4	420,000	810,000	615,000
methylene chloride	3	4	49,000	220,000	159,667
toluene	3	4	82,000	300,000	197,333
BNAs:					
bis(2-ethylhexyl)phthalate	1	7	200,000	200,000	200,000

carbazole	6	6	66,000	9,200,000	2,811,167
dibenzofuran	7	7	82,000	43,000,000	13,683,143
dimethylphenol, 3,5-	1	1	590,000	590,000	590,000
methylnaphthalene, 2-	7	7	2,400,000	84,000,000	28,400,000
naphthalene,1-methyl-	6	6	650,000	100,000,000	45,008,333

Table 8

Reasonable Maximum Exposure Concentrations and Estimated Risk Values for Major Risk Drivers in Soil

Chemical of Concern	**Concentration** (mg/kg)	**Cancer Risk**	**Contribution to Cancer Risk** (%)	**Source of Toxicity Information**
Benzo(a)anthracene	310	3.53×10^{-4}	13.47	USEPA[a]
Chrysene	352	4.01×10^{-6}	0.15	USEPA[a]
Benzo(b)fluoranthene	214	2.44×10^{-4}	9.31	USEPA[a]
Benzo(k)fluoranthene	89.6	1.02×10^{-5}	0.39	USEPA[a]
Benzo(b&k)fluoranthene	550	6.27×10^{-4}	23.93	USEPA[a]
Benzo(a)pyrene	370	4.21×10^{-4}	16.07	IRIS
Indeno(1,2,3-cd)pyrene	100	1.14×10^{-4}	4.35	USEPA[a]
Dibenzo(a,h)anthracene	38.6	4.40×10^{-5}	1.68	USEPA[a]
Pentachlorophenol	108	2.02×10^{-5}	0.77	IRIS
2,3,7,8-TCDD/TEF	0.0001077	2.52×10^{-5}	0.96	HEAST
1,2,3,7,8-PeCDF/TEF	0.00075	1.76×10^{-4}	6.72	HEAST
1,2,3,4,6,7,8-HpCDD/TEF	0.0008	1.87×10^{-4}	7.14	HEAST
1,2,3,4,7,8-HxCDD/TEF	0.000098	2.30×10^{-5}	0.88	HEAST
2,3,4,6,7,8-HxCDF/TEF	0.000043	1.01×10^{-5}	0.39	HEAST
1,2,3,6,7,8-HpCDD/TEF	0.000067	7.57×10^{-5}	2.89	HEAST
1,2,3,7,8,9-HpCDD/TEF	0.0003	7.03×10^{-5}	2.68	HEAST
OCDD/TEF	0.00092	2.15×10^{-4}	8.21	HEAST

[a] Provisional Guidance for Quantitative Assessment of Polycyclic Aromatic Hydrocarbons, USEPA, July 1993
IRIS – Integrated Risk Information System, USEPA, 1995
HEAST – Health Effects Assessment Summary Tables, Annual Summary, USEPA, 1994.

Table 9

Reasonable Maximum Exposure Concentrations and Estimated Risk Values for Primary Risk Drivers in Groundwater

Chemical of Concern	**Concentration** (mg/L)	**HQ**	**Cancer Risk**	**Contribution to Cancer Risk** (%)	**Source of Toxicity Information**
Semi-volatile Organics:					
Bis(2-ethylhexl)phthalate	12.0	16.4	1.97×10^{-3}	2.67	IRIS
Carbazole	3.82		9.04×10^{-4}	1.22	HEAST
Naphthalene	130	89			ODEQ
Acenaphthene	21.5	9.82			IRIS
Fluorene	17.5	12.0			IRIS
Fluoranthene	17.0	11.6			IRIS
Pyrene	5.0	4.57			IRIS
Benzo(a)anthracene	1.7		1.45×10^{-2}	19.64	USEPA[a]
Benzo(b)fluoranthene	1.3		1.11×10^{-2}	15.04	USEPA[a]
Benzo(a)pyrene	0.24		2.04×10^{-2}	27.64	IRIS
Dibenzofuran	13.95	95.5			USEPA[b]
Phenols:					
Pentachlorophenol	16	14.6	2.23×10^{-2}	30.21	IRIS
4-methyphenol	0.24	1.32			HEAST
PCBs & Pesticides:					
Dieldrin	0.0062	3.40	1.16×10^{-3}	1.57	IRIS
Heptachlor epoxide	0.0007	1.48	7.48×10^{-5}		IRIS
PCB-1254	0.0042	5.75			IRIS

[a] Provisional Guidance for Quantitative Assessment of Polycyclic Aromatic Hydrocarbons, USEPA, July 1993
[b] Provisional RfD, USEPA Region 5, July 1994
IRIS – Integrated Risk Information System, USEPA, 1995
HEAST – Health Effects Assessment Summary Tables, Annual Summary, USEPA, 1994.
Oregon Department of Environmental Quality - Provisional RfD, January 1992

Table 10

Average Exposure, Maximum Exposure Concentration, and Associated Risk Values for Chemicals of Concern in Soil

Chemical of Concern	Average Conc. (mg/kg)	Average Conc. Cancer Risk	RME Concentration (mg/kg)	RME HQ	RME Cancer Risk
Naphthalene			250,000	22.8	
Benzo(a)anthracene	393	3.97×10^{-5}	310		3.53×10^{-4}
Chrysene			352		4.01×10^{-6}
Benzo(b)fluoranthene	214	2.16×10^{-5}	214		2.44×10^{-4}
Benzo(k)fluoranthene	26.5	2.68×10^{-5}	89.6		1.02×10^{-5}
Benzo(b&k)fluoranthene	550	5.56×10^{-5}	550		6.27×10^{-4}
Benzo(a)pyrene	370	3.74×10^{-4}	370		4.21×10^{-4}
Indeno(1,2,3-cd)pyrene	100	1.01×10^{-5}	100		1.14×10^{-4}
Dibenzo(a,h)anthracene	28	2.83×10^{-5}	38.6		4.40×10^{-5}
Dibenzofuran			1380	1.26	
Pentachlorophenol	108	1.79×10^{-6}	108		2.02×10^{-5}
2,3,7,8-TCDD/TEF	0.0001077	2.23×10^{-6}	0.0001077		2.52×10^{-5}
1,2,3,7,8-PeCDF/TEF	0.00075	1.56×10^{-5}	0.00075	2.73	1.76×10^{-4}
1,2,3,4,6,7,8-HpCDD/TEF	0.0008	1.66×10^{-5}	0.0008	2.92	1.87×10^{-4}
1,2,3,4,7,8-HxCDD/TEF			0.000098		2.30×10^{-5}
2,3,4,6,7,8-HxCDF/TEF			0.000043		1.01×10^{-5}
1,2,3,6,7,8-HpCDD/TEF	0.0003	6.23×10^{-6}	0.000067		7.57×10^{-5}
1,2,3,7,8,9-HpCDD/TEF	0.000069	1.43×10^{-6}	0.0003	1.09	7.03×10^{-5}
OCDD/TEF	0.00092	1.91×10^{-5}	0.00092	3.35	2.15×10^{-4}

Note: Different exposure assumptions were used for the Average Concentration Cancer Risk and the RME Cancer Risk calculations. The different assumptions used were: exposure duration, exposure frequency, ingestion rate, and average time exposed for non-carcinogens.

Table 11

Maximum Exposure Concentration and Associated Risk Values for Chemicals of Concern in Groundwater

Chemical of Concern	Average Concentration (mg/L)	Average HQ	Average Cancer Risk	RME Conc. (mg/L)	RME HQ	RME Cancer Risk
Volatile Organics:						
Benzene	0.057		3.20×10^{-6}	0.057		1.94×10^{-5}
1,2-dichloroethane				0.004		4.27×10^{-6}
Semi-volatile Organics:						
Bis(2-ethylhexl)phthalate	12	9.04	3.25×10^{-4}	12.0	16.4	1.97×10^{-3}
Carbazole	3.85		1.49×10^{-4}	3.82		9.04×10^{-4}
Naphthalene	130	89		130	89	
Acenaphthene	21.5	9.82		21.5	9.82	
Fluorene	17.5	12.0		17.5	12.0	
Anthracene	5.35	0.489		5.35	0.489	
Fluoranthene	17.0	6.4		17.0	11.6	
Pyrene	5.0	2.51		5.0	4.57	
Benzo(a)anthracene	1.7		1.45×10^{-2}	1.7		1.45×10^{-2}
Chrysene	1.4		1.98×10^{-5}	1.4		1.20×10^{-4}
Benzo(b)fluoranthene	1.3		1.84×10^{-3}	1.3		1.11×10^{-2}
Benzo(k)fluoranthene	0.52		7.35×10^{-5}	0.52		4.46×10^{-4}
Benzo(a)pyrene	0.24		2.04×10^{-2}	0.24		2.04×10^{-2}
Indeno(1,2,3-cd)pyrene	0.017		2.40×10^{-5}	0.007		6.00×10^{-5}
Dibenzofuran	13.95	95.5		13.95	95.5	
Phenols:						
Pentachlorophenol	16	8.04	3.71×10^{-3}	16	14.6	2.23×10^{-2}
4-methyphenol	0.24	1.32		0.24	1.32	
2,4,6-trichlorophenol				0.037		4.78×10^{-6}
PCBs & Pesticides[a]:						
Dieldrin	0.0062	1.87	1.94×10^{-4}	0.0062	3.40	1.16×10^{-3}
Heptachlor epoxide	0.0007	0.811	1.23×10^{-5}	0.0007	1.48	7.48×10^{-5}
PCB-1254	0.0042	5.75		0.0042	5.75	
Total PCBs	0.00745		6.73×10^{-4}	0.00745		6.73×10^{-4}

[a] Each compound detected in the RI samples was carried forward in the risk assessment as a potential contaminant of concern, but may not have contributed significantly to the overall estimated risk (see Table 9).

Table 12

Summary of Baseline Risk Adjacent to the Wyckoff Property

From 1991 Risk Assessment

	Ingestion of Clams		Ingestion of Sediments
Transect Number	Noncancer hazard[a]/major contaminant(s) contributing to noncancer hazard	Cancer risk[a]/major contaminant(s) contribution to cancer risk	Cancer risk[a]/ major contaminant(s) contribution to cancer risk
10	1 / methyl-mercury	$2x10^{-3}$ / PAHs	$6x10^{-6}$ / PAHs
11	NA	NA	$1x10^{-5}$ / PAHs
12	20 / antimony	$1x10^{-3}$ / PAHs	$6x10^{-6}$ / PAHs
13	1 / methyl mercury, chromium	$8x10^{-4}$ / PAHs	$8x10^{-7}$ / beryllium

[a]Calculated using RME concentration
NA = Data not obtained at this transect to complete calculation

Table 13 Groundwater Cleanup Levels for Protection of Human Health and the Marine Environment (µg/L)

Contaminant of Concern	WA SW Quality Stds. (173-201A WAC)	MTCA Method B SW for Human Consumption of Organisms (173-340 WAC)[b]	Federal WQStandards/ NTR (40 CFR 131)		Federal WQ Criteria		Calculated Pore-Water Concentrations Based on SMS or HH (See Table 15)	Groundwater Cleanup Level[c]
			Marine Chronic	Human Cons. of Orgs.	Marine Chronic	Human Cons.		
Naphthalene		9880					83	83
Acenaphthylene								
Acenaphthene		643				2,700	3	3
Fluorene		3,460		14,000		14,000	3	3
Phenanthrene								
Anthracene		25,900		110,000		110,000	9	9
Fluoranthene		90		370		370	3	3
Pyrene		2,590		11,000		11,000	15	15
Benzo(a)anthracene		.0296		.031		.049	.308	.0296
Chrysene		.0296		.031		.049	.262	.0296
Benzo(b)fluoranthene		.0296		.031		.049	.079	.0296
Benzo(k)fluoranthene		.0296		.031		.049	.079	.0296
Benzo(a)pyrene		.0296		.031		.049	.102	.0296
Dibenzo(a,h)anthracene		.0296		.031		.049	.007	.007
Benzo(g,h,i)perylene								
Indeno(1,2,3-cd)pyrene		.0296		.031		.049		.0296
HPAH							0.254	0.254
Pentachlorophenol	7.9[a]	4.9	143	8.2	7.9	8.2	880	4.9

[a] Chronic criteria

[b] Values obtained from MTCA Cleanup Levels and Risk Calculations (CLARC II) Update (February 1996)

[c] Where there is no cleanup level specified for a certain chemical, benzo(a)pyrene will be used as an indicator chemical during remediation. Groundwater cleanup levels will be measured at the point of compliance (see Section 8.4.2).

Table 14
Soil Cleanup Levels[a]

Contaminants of Concern	MTCA Method B Cleanup Standards[b] (µg/kg)
Naphthalene	3.20E+06
Acenaphthylene	NA
Acenaphthene	4.80E+06
Fluorene	3.20E+06
Phenanthrene	NA
Anthracene	2.40E+07
Fluoranthene	3.20E+06
Pyrene	2.40E+06
Benzo(a)anthracene	1.37E+02
Chrysene	1.37E+02
Benzo(b)fluoranthene	1.37E+02
Benzo(k)fluoranthene	1.37E+02
Benzo(a)pyrene	1.37E+02
Dibenzo(a,h)anthracene	1.37E+02
Benzo(g,h,i)perylene	NA
Indeno(1,2,3-cd)pyrene	1.37E+02
Dioxin (2,3,7,8-TCDD)/tef[c]	6.67E-03
Pentachlorophenol	8.33E+03

[a] For surface soil to 15 feet bgs, the most stringent of Method B levels will need to be met. If the levels cannot be practically met, then a point of compliance will be established in the soils for direct contact at the ground surface (see Section 8.4.1, above).

[b] Model Toxics Control Act (MTCA) Cleanup Levels and Risk Calculation (CLARCII) Update, February 1996. Where both cancer and non-cancer values are provided, the most stringent are used.

Concentrations of individual hazardous substances shall be adjusted downward to take into account exposure to multiple hazardous substances and/or exposure resulting from more than one pathway of exposure. In making these adjustments, the hazard index shall not exceed 1 and the total excess cancer risk shall not exceed one in one hundred thousand (MTCA Chapter 173-340 WAC).

[c] Chlorinated Dioxin/Furan TEFs (expressed as 2,3,7,8 TCDD TEQ)

NA = There were no values available for these chemicals in CLARCII. For purposes of cleanup, assume they are co-located with other PAH compounds.

Table 15 Estimate of Maximum Allowable Pore-Water Concentrations of COCs

Contaminant of Concern	Sediment Management Standards WAC 173-204 (mg/kg organic carbon [a]) Quality Standards	Screening Levels	Protection of HH for Intertidal Sediments (mg/kg oc)	Koc[b] (ml/g)	Calculated Pore-Water Maximums Based on Sediment Mgt. Stds. (µg/L) Quality Standards	Screening Levels (µg/L)	Calculated Pore-Water Based on HH	Most Stringent Pore-Water Concentration
Naphthalene	99	170		1,191	83	143		83
Acenaphthylene	66	66		NA				
Acenaphthene	16	57		4,898	3	12		3
Fluorene	23	79		7,961	3	10		3
Phenanthrene	100	480		NA				
Anthracene	220	1,200		23,493	9	51		9
Fluoranthene	160	1,200		49,096	3	24		3
Pyrene	1,000	1,400		67,992	15	21		15
Benzo(a)anthracene	110	270		356,938	.308	.756		.308
Chrysene	110	460		420,108	.262	1.095		.262
Total Benzofluoranthenes[c]	230	450		2,903,559	.079	.155		.079
Benzo(a)pyrene	99	210		968,774	.102	.217		.102
Dibenzo(a,h)anthracene	12	33		1,789,101	.007	.018		.007
Benzo(g,h,i)perylene	31	78		NA				
Indeno(1,2,3-cd)pyrene	34	88		NA				
HPAH[d]	960	5300	40[e]	157,213[f]	6.1	33.7	0.254	0.254
Pentachlorophenol	360	690		409	880	1687		880

[a] The listed chemical parameter criteria represent concentrations in parts per million "normalized", or expressed, on a total organic carbon basis. To normalize to total organic carbon, the dry weight concentration for each parameter is divided by the decimal fraction representing the percent total organic carbon content of the sediment.

[b] December 1998 Draft MTCA Rule Revision, Soil Organic Carbon-Water Partitioning Coefficient (Koc) Values, Table 747-4.

[c] The Total Benzofluoranthenes criterion represents the sum of the concentrations of the “B”, “J”, and “K” isomers.

[d] For the intertidal sediments, the cleanup goal established in the East Harbor Record of Decision (ROD), September 1994, is 1,200 µg/kg (dry weight), developed by EPA to address human health risks from consumption of contaminated shellfish in intertidal areas. This objective requires that intertidal sediment HPAH concentrations must not exceed 1,200 µg/kg (dry weight). Achievement of the HPAH objective in intertidal sediments is expected to result in corresponding reduction in clam tissue contamination.

The HPAH criterion represents the sum of the following “high molecular weight polynuclear aromatic hydrocarbon” compounds: Fluoranthene, Pyrene, Benzo(a)anthracene, Chrysene, Total Benzofluoranthenes, Benzo(a)pyrene, Dibenzo(a,h)anthracene, Benzo(g,h,i)perylene, and Indeno(1,2,3-cd)pyrene. The HPAH criterion is not the sum of the criteria values for the individual HPAH compounds as listed.

[e] 40 mg/kg organic carbon is 1,200 µg/kg (dry weight) normalized, i.e., (1200 µg/kg dw/3% TOC) x (1/1000)

[f] Average Koc for HPAH is derived from site-specific solubility-weighted NAPL composition data (Wyckoff NAPL Field Exploration Report, U.S. Army Corps of Engineers, 2000).

NA = There were no values available for these chemicals.

FIGURES

This page intentionally blank.

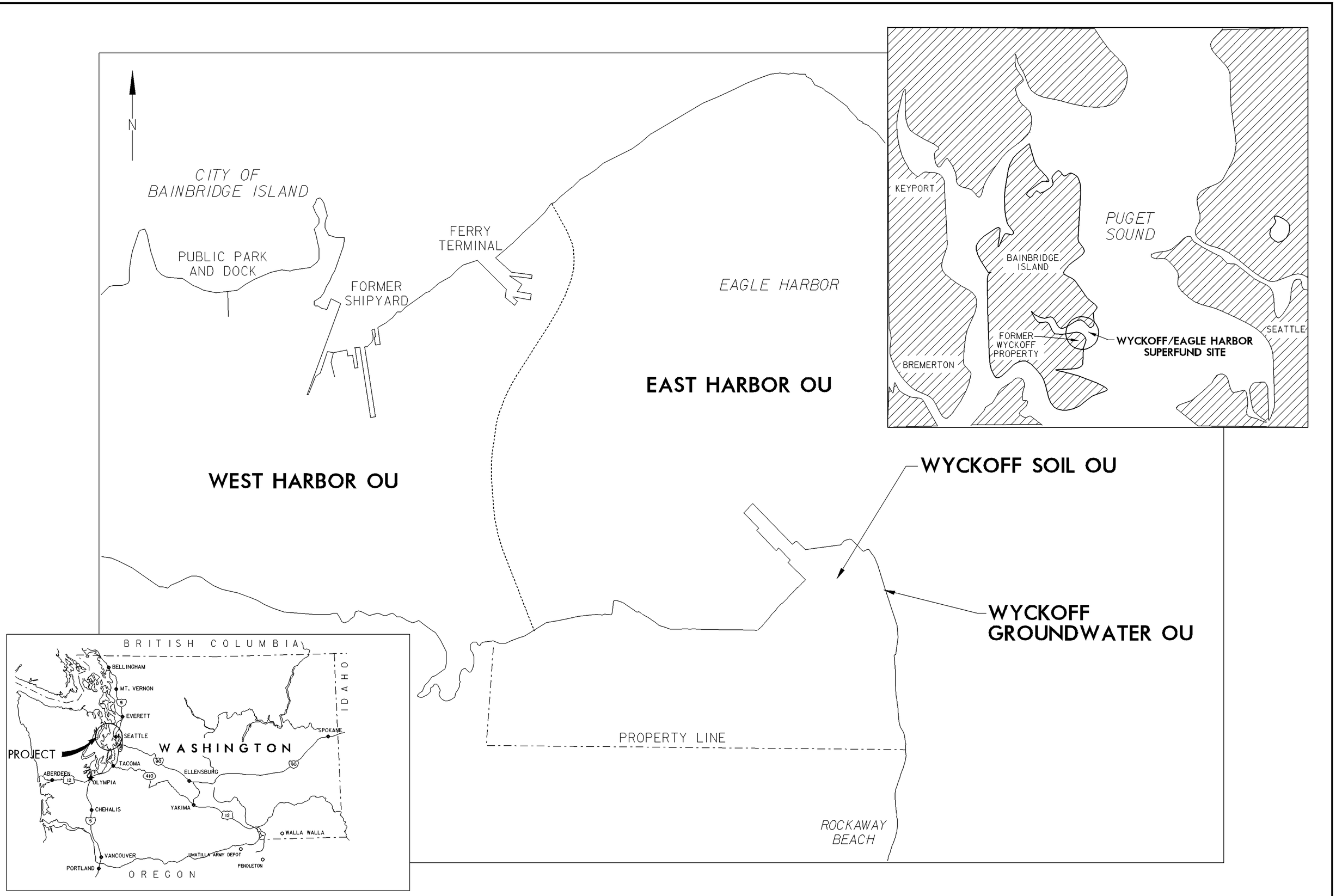

WYCKOFF/EAGLE HARBOR SUPERFUND SITE

NOT TO SCALE

Figure 1

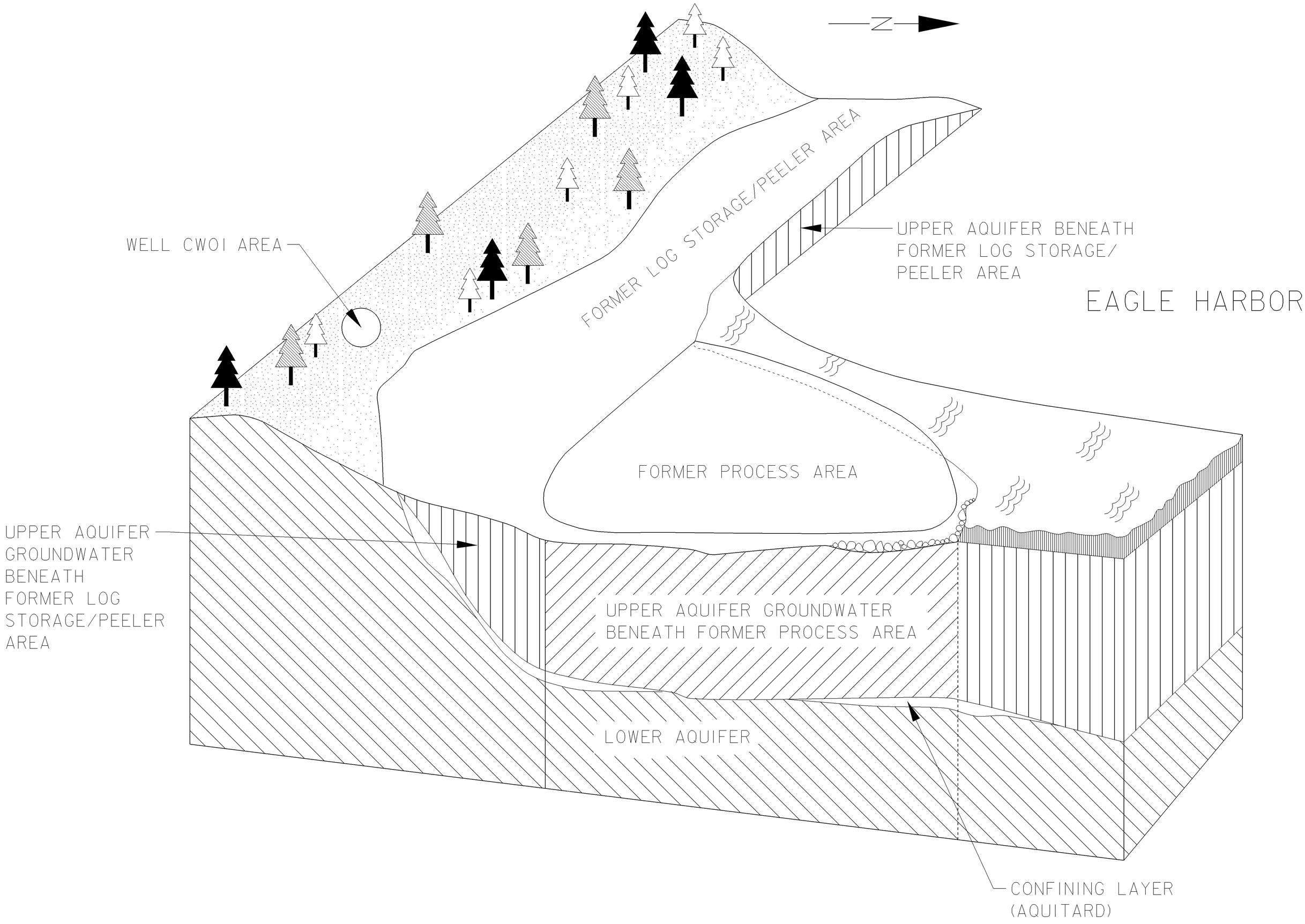

UPPER AND LOWER AQUIFERS

NOT TO SCALE

Figure 4

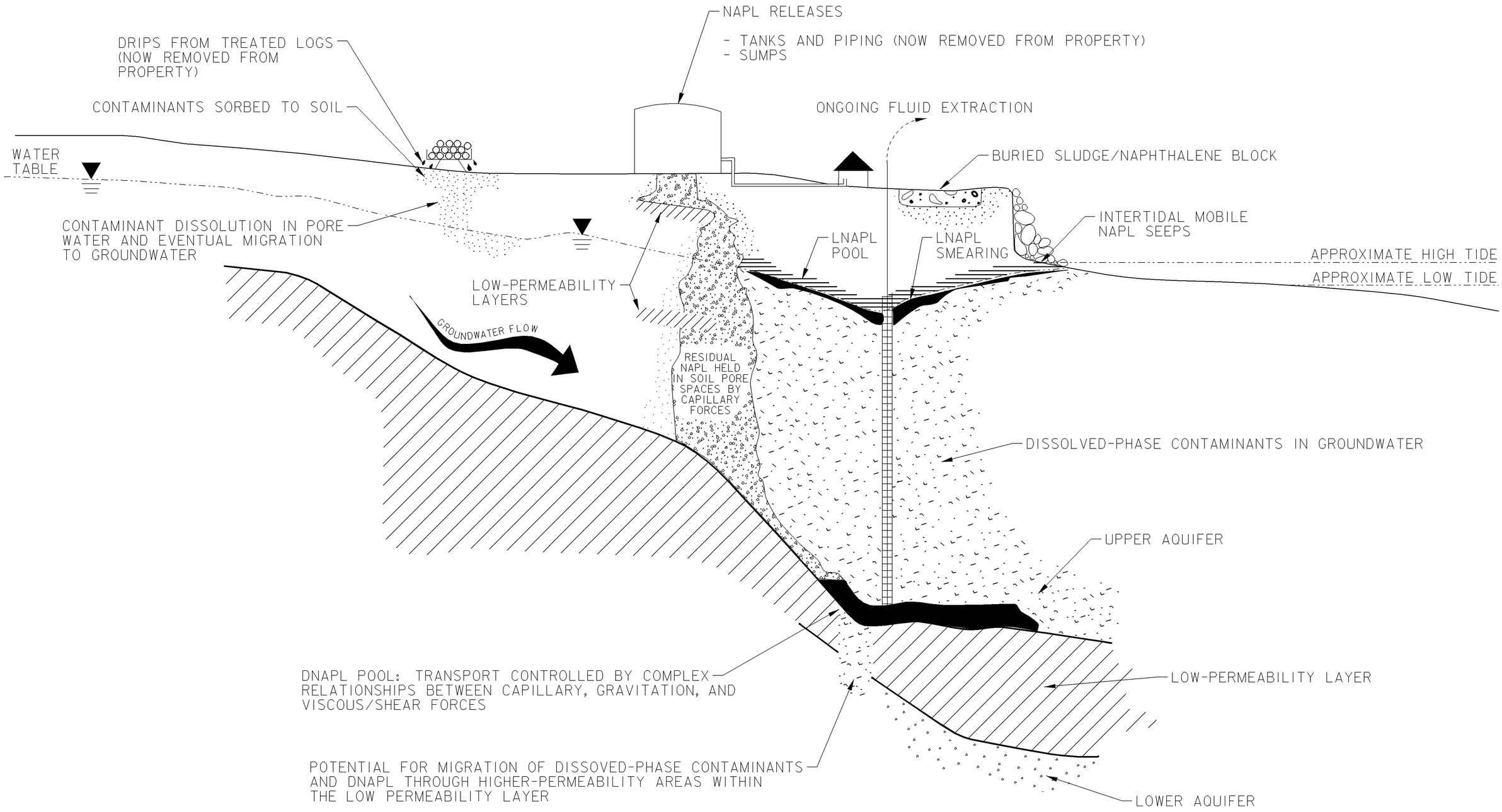

CONCEPTUAL MODEL OF CONTAMINANT FATE AND TRANSPORT

NOT TO SCALE

Figure 6

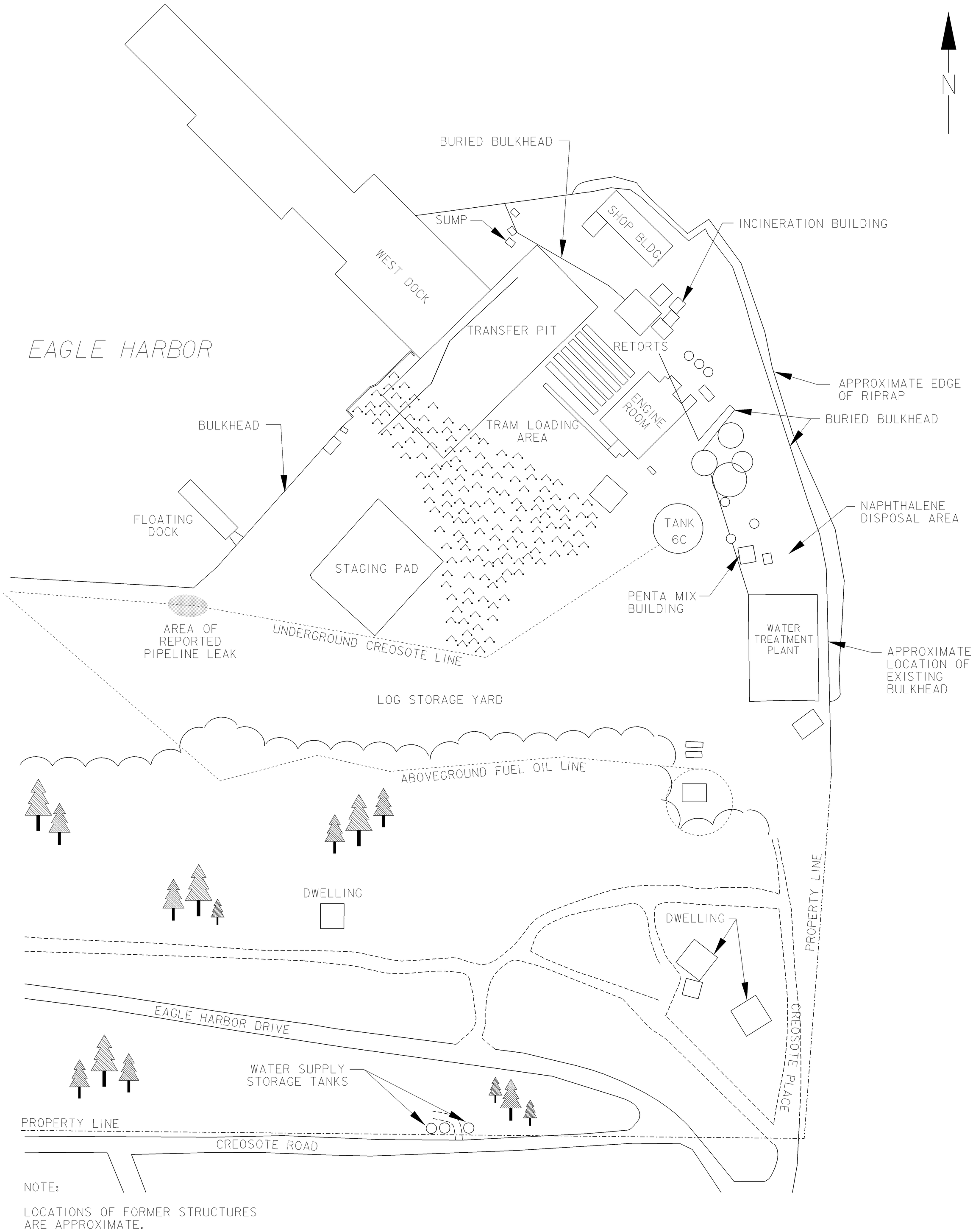

NOTE:

LOCATIONS OF FORMER STRUCTURES ARE APPROXIMATE.

HISTORIC SITE MAP

NOT TO SCALE

Figure 2

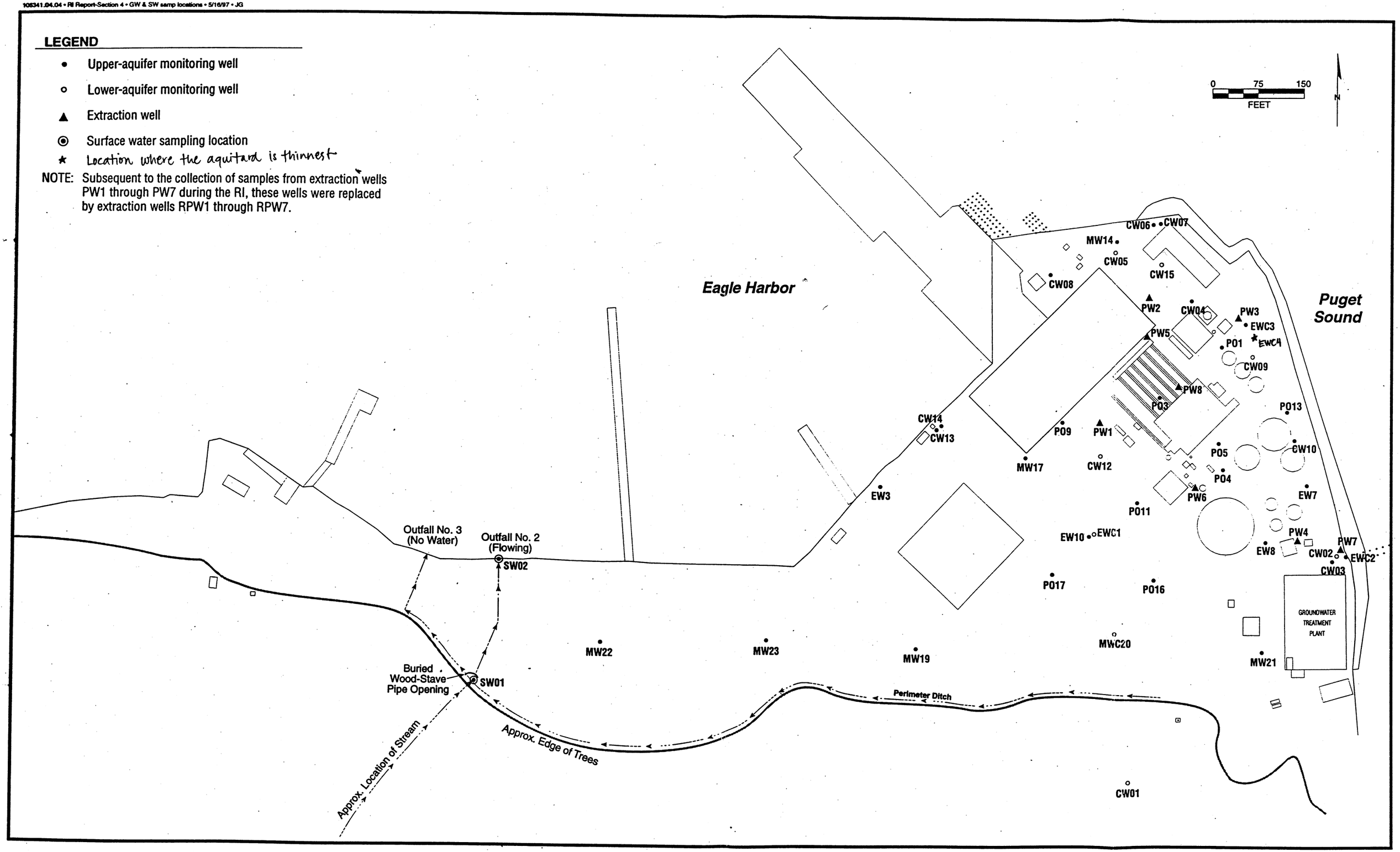

Figure 5

Groundwater Sampling Locations

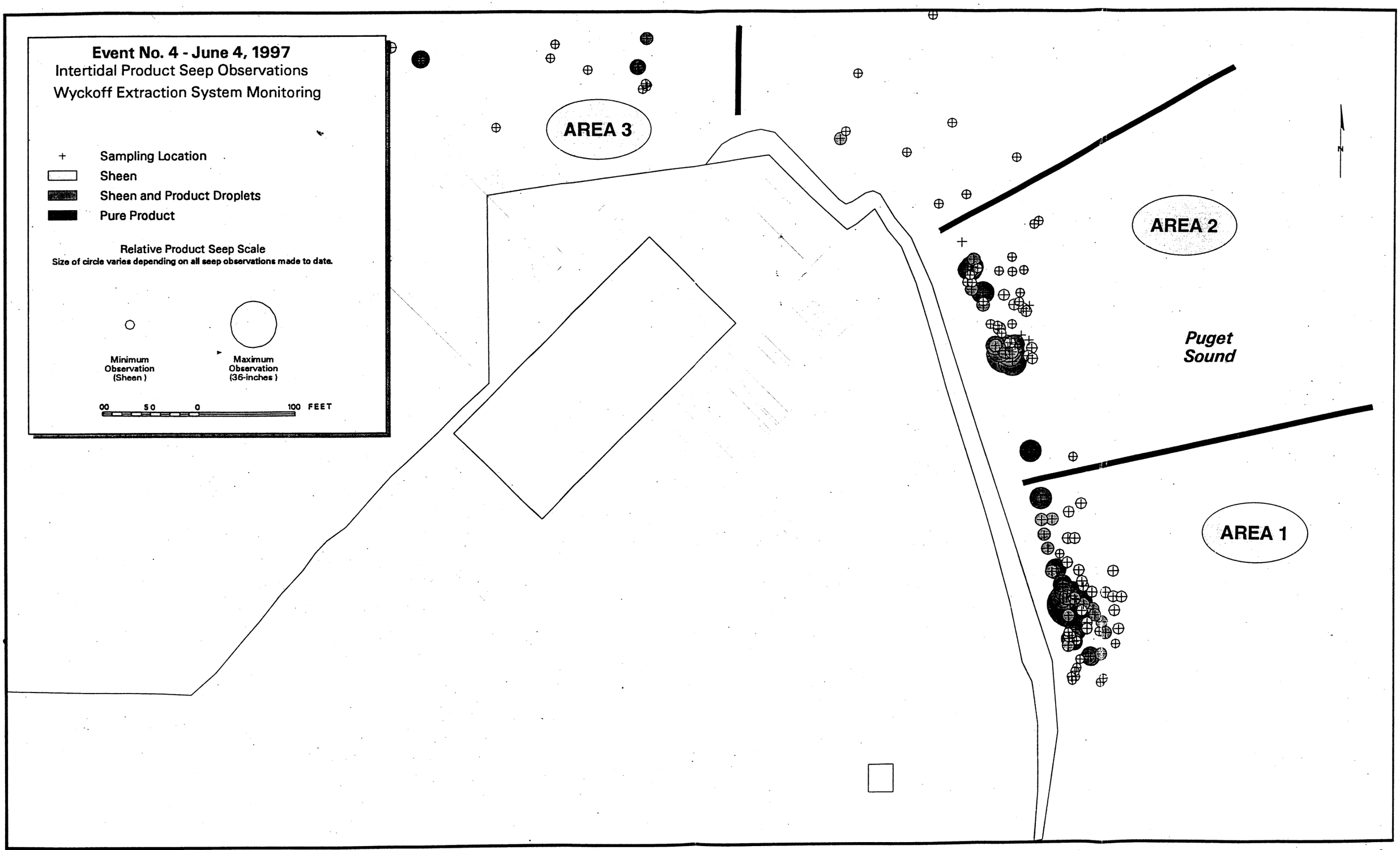

Figure 6
INTERTIDAL NAPL SEEP OBSERVATIONS ON JUNE 4, 1997 (EVENT NO. 4)

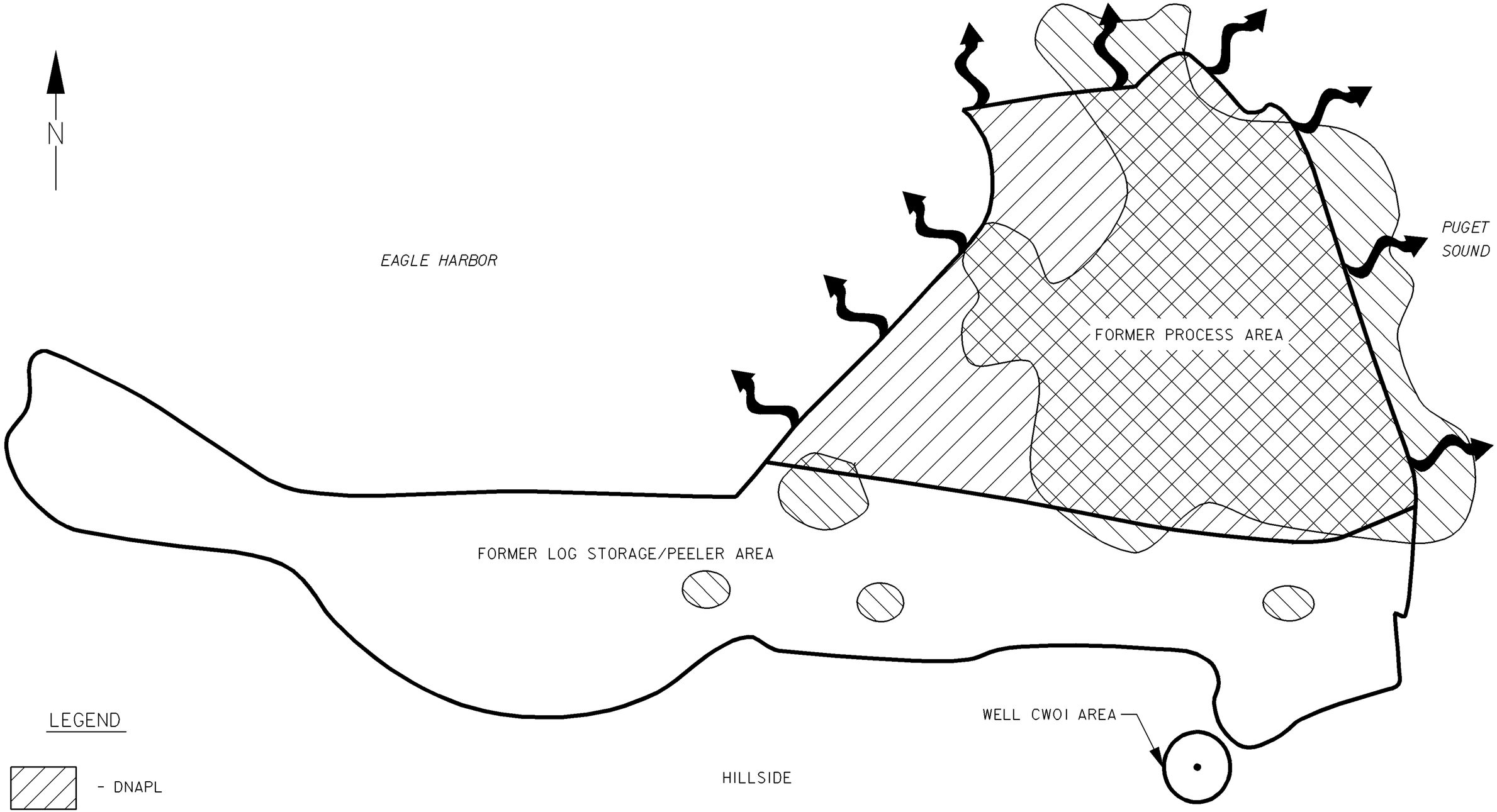

LEGEND

- DNAPL
- LNAPL
- POTENTIAL DIRECTION OF DNAPL MIGRATION BELOW THE SEDIMENT SURFACE

APPROXIMATE EXTENT OF LNAPL AND DNAPL IN THE UPPER AQUIFER GROUNDWATER

NOT TO SCALE

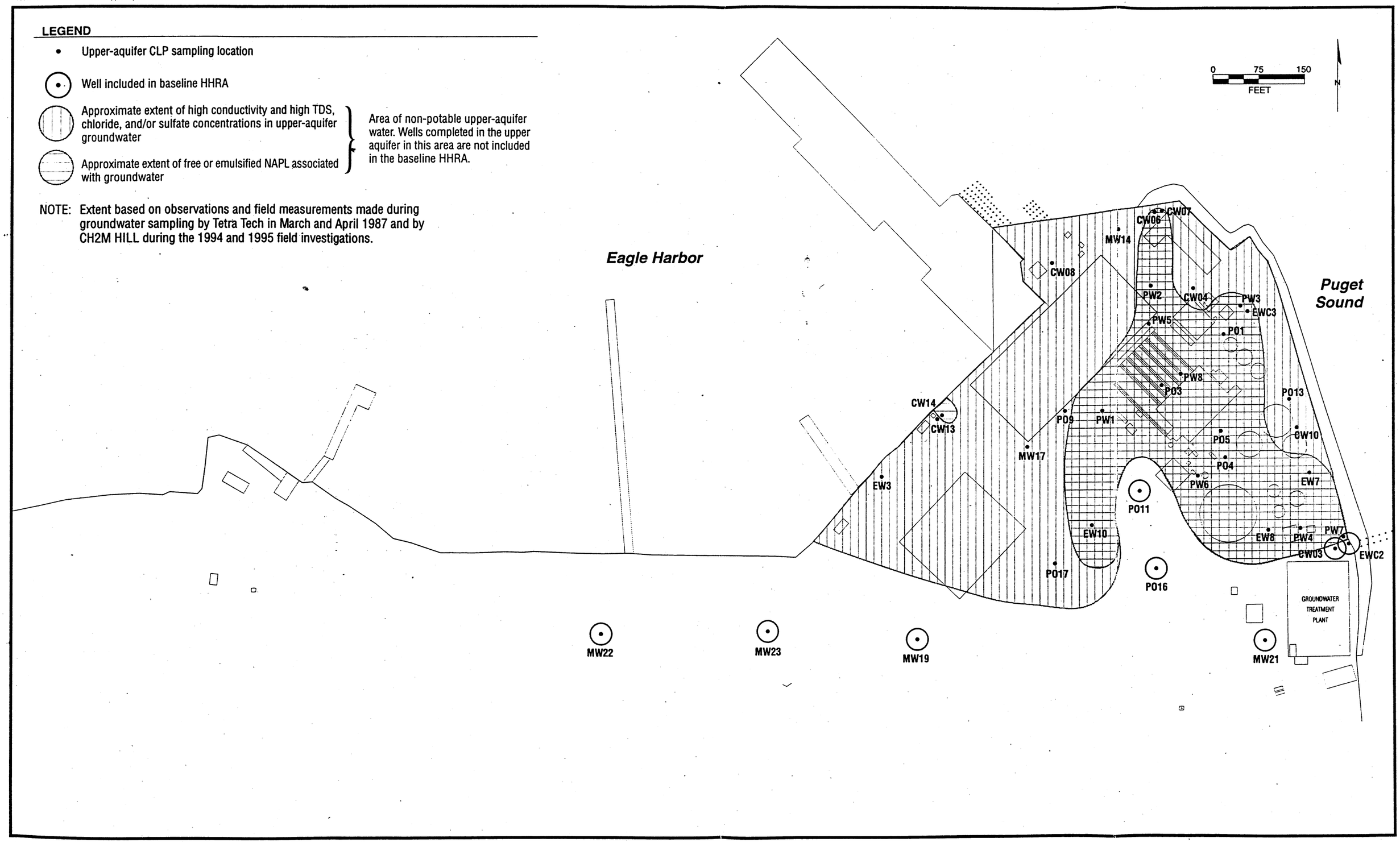

Figure 8
DELINEATION OF NON-POTABLE WATER IN UPPER AQUIFER

POTENTIAL SLURRY WALL ALIGNMENT

NOT TO SCALE

Figure 7

REVISIONS				
SYMBOL	ZONE	DESCRIPTION	DATE	BY

U.S. ARMY ENGINEER DISTRICT, SEATTLE
CORPS OF ENGINEERS
SEATTLE, WASHINGTON

WYCKOFF/EAGLE HARBOR SUPERFUND SITE

POTENTIAL SHEET PILE WALL ALIGNMENT

BAINBRIDGE ISLAND WASHINGTON

SIZE	INVITATION NO.	FILE NO.	DATE:	PLATE
D				
DSGN. GILBERT		CHK.	SHEET	

This project was designed by the Seattle District U.S. Army Corps of Engineers. The initials or signatures and registration designations of individuals appear within the specifications or on these project documents within the scope of their employment as required by ER 1110-1-8152, Professional Registration.

DATE AND TIME PLOTTED: 28-APR-2000 13:05
DESIGN FILE: j:#nd#eh#geotech#proplan#wyppcs0d.dgn

COMPUTER AIDED DESIGN & DRAFTING

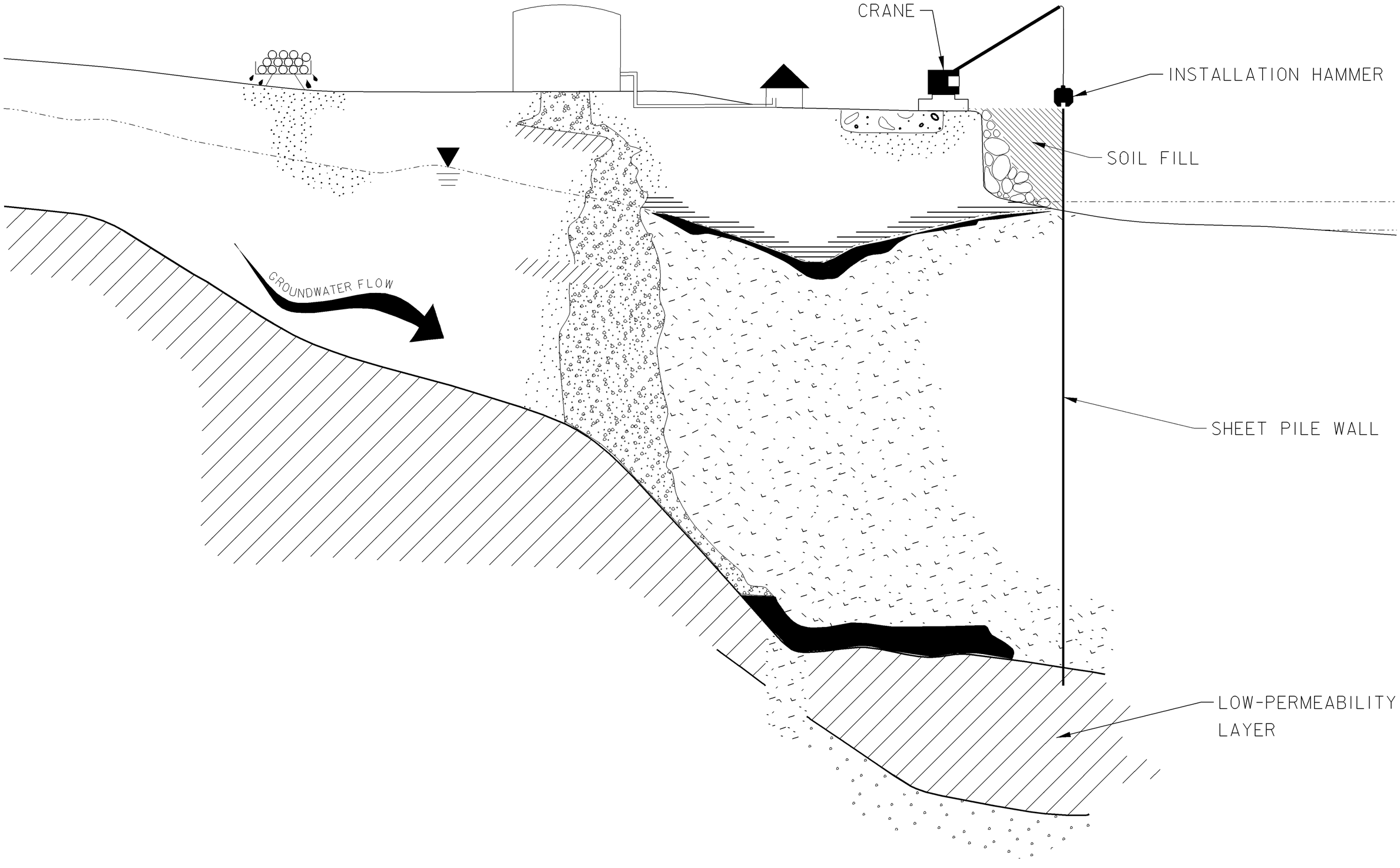

CROSS SECTION OF POTENTIAL SHEET PILE WALL

NOT TO SCALE

Figure 9

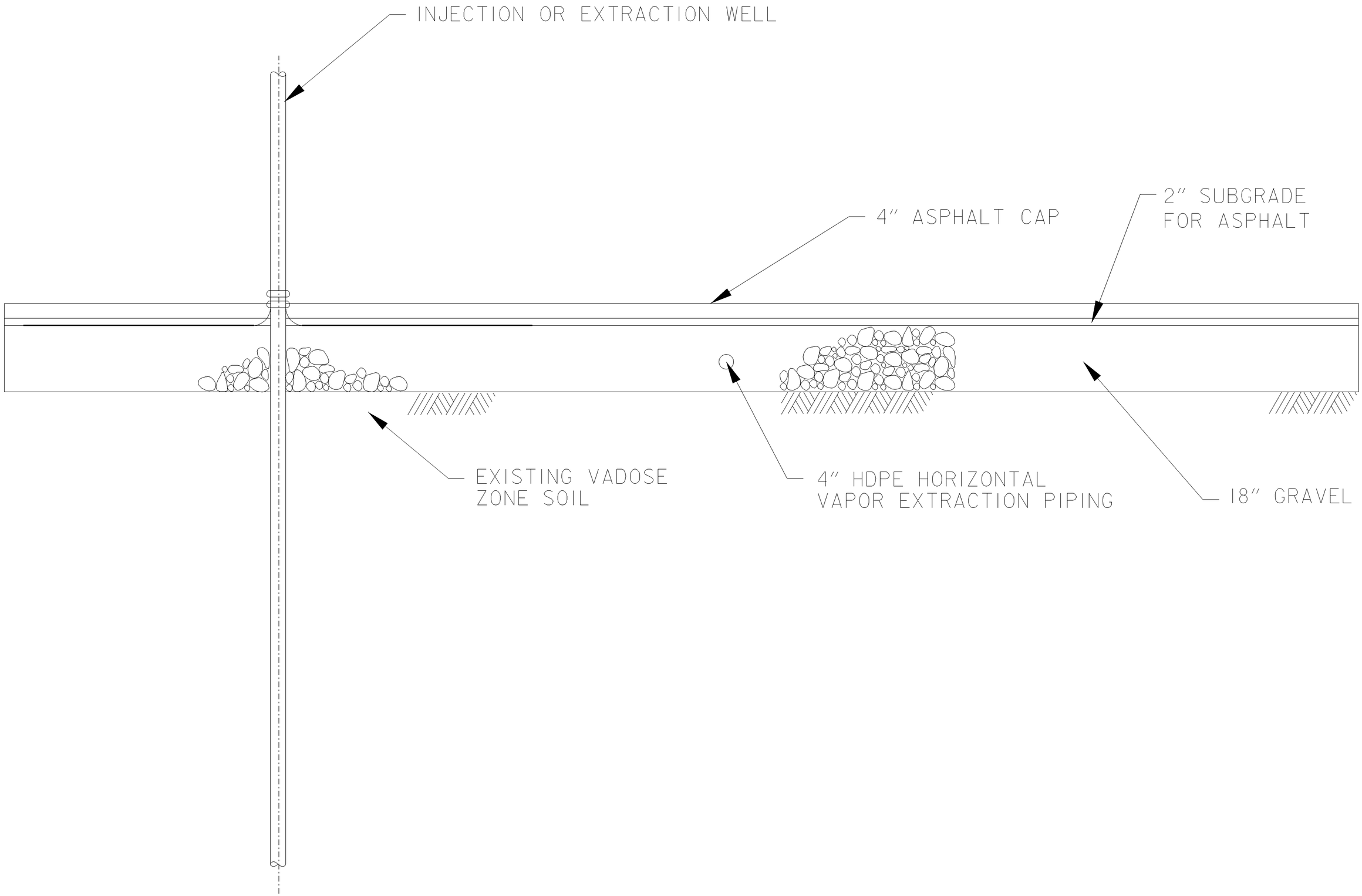

CONCEPTUAL STEAM INJECTION VAPOR COVER SYSTEM

NOT TO SCALE

Figure 10

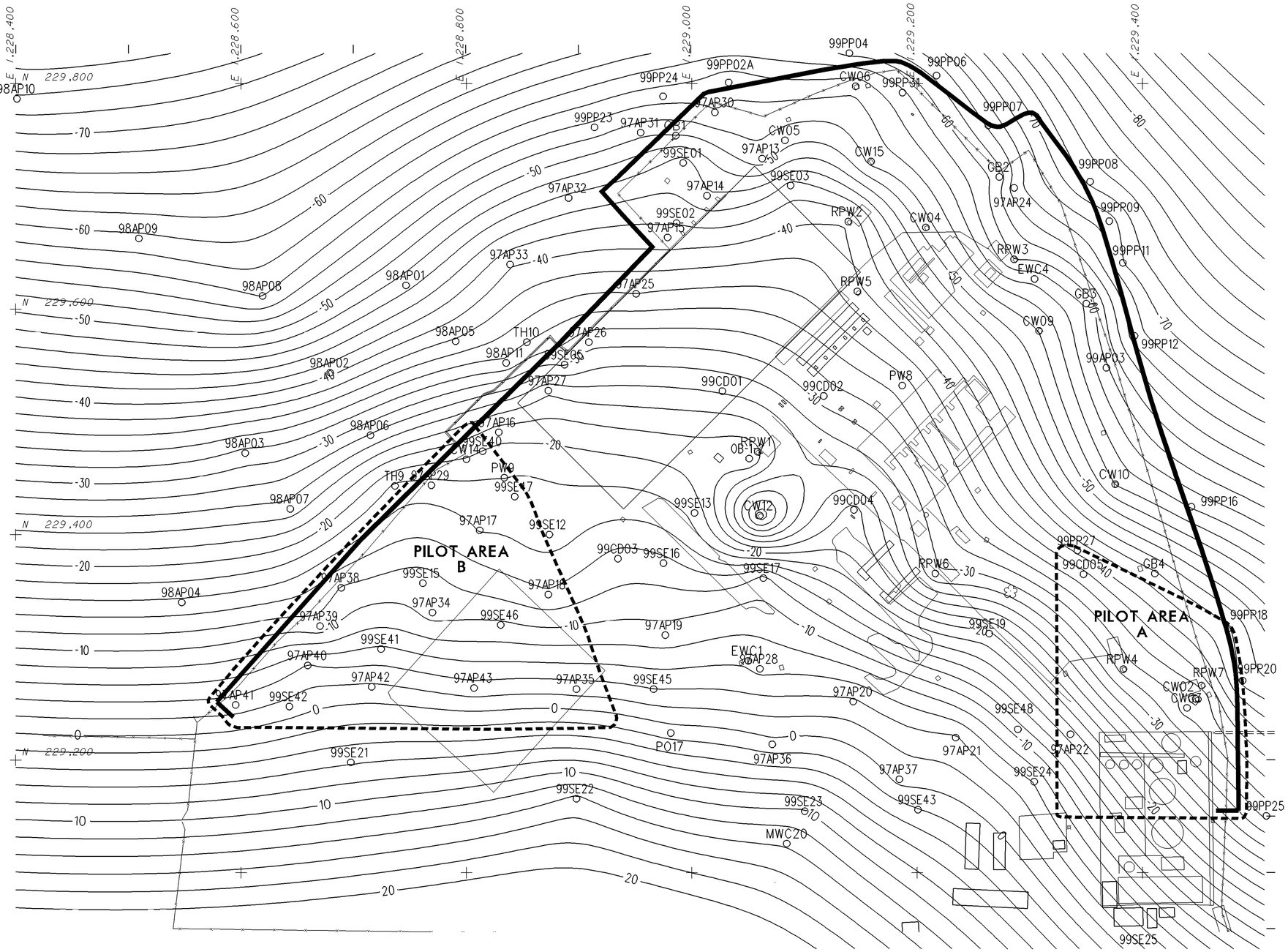

REVISIONS				
SYMBOL	ZONE	DESCRIPTION	DATE	BY

LEGEND

- PROPOSED SHEETPILE WALL ALIGNMENT

NOTES:

1. CONTOUR VALUES REPRESENT ELEVATION (MLLW) OF TOP OF GLACIAL AQUITARD. GLACIAL AQUITARD IS THE LOW-PERMEABILITY PORTION OF THE GLACIAL UNIT AND DOES NOT INCLUDE UPPER ZONES OF PERMEABLE GLACIAL MATERIALS.
2. CONTOUR INTERVAL IS 2 FEET.
3. CONTOURS WERE COMPUTER-GENERATED BY SURFER USING KRIGING AND LINEAR DRIFT INTERPOLATIONS. CONTOURS ARE BASED ONLY ON DATA POINTS SHOWN AND MAY NOT REPRESENT ACTUAL CONDITIONS NEAR BOUNDARIES OF DRAWING.
4. PILOT TEST LOCATIONS ARE APPROXIMATE.

0 100' 200'

HORIZONTAL DATUM IS WSPCS NAD83
VERTICAL DATUM IS MLLW

This project was designed by the Seattle District U.S. Army Corps of Engineers. The initials or signatures and registration designations of individuals appear within the specifications or on these project documents within the scope of their employment as required by ER 1110-1-8152, Professional Registration.

DATE AND TIME PLOTTED: 28-APR-2000 13:40
DESIGN FILE: j:\nd\eh\geotech\tempwk\ehwycs0g.dgn

Computer Aided Design & Drafting

U.S. ARMY ENGINEER DISTRICT, SEATTLE
CORPS OF ENGINEERS
SEATTLE, WASHINGTON

WYCKOFF/EAGLE HARBOR SUPERFUND SITE

MAP OF THE TOP OF GLACIAL PORTION OF THE UPPER AQUITARD

EAGLE HARBOR — WASHINGTON

SIZE	INVITATION NO.	FILE NO.	DATE:	PLATE
D				
DSGN. BROOKSHIER		CHK. EASTERLY	FIGURE 11	

This page intentionally blank.

WYCKOFF/EAGLE HARBOR
SUPERFUND SITE
BAINBRIDGE ISLAND, WASHINGTON

RECORD OF DECISION

PART 3: RESPONSIVENESS SUMMARY

February 2000

TABLE OF CONTENTS

Section
Page

1. COST/RISK ANALYSIS OF NO ACTION AND CONTAINMENT 1

2. CONTAINMENT vs. THERMAL REMEDIATION 2

3. STEAM INJECTION vs. ELECTRICAL RESISTANCE HEATING 2

4. MITIGATION COSTS 3

5. COMMUNITY IMPACTS/CONCERNS 3

5.1 Sheet Pile Driving Noise Issues 3

5.2 Noise Levels During Thermal Remediation/Boiler Operation 4

5.3 Diesel Fuel vs. Propane Fuel 5

5.4 Barge Delivery of Fuel vs. Truck Delivery 5

5.5 Odors During System Operation 5

5.6 Light Glare During System Operation 5

5.7 Site Landscape 6

5.8 Community Outreach During System Operation 6

5.9 Compare/Contrast Community Impacts Associated with Each Remedial Alternative 6

6. DESIGN ISSUES 7

6.1 Proper Seating of Sheet Pile into Aquitard 7

6.2 Heat Effects on Sheet Pile Joints 7

6.3 NAPL Migration Thru Aquitard into Lower Aquifers 7

6.4 NAPL Migration Thru Sheet Pile Wall 8

6.5 Thermal Remediation of Dioxins/Furans 8

6.6 Thermal Remediation of High Molecular Weight PAHs 9

6.7 Vapor Cover Materials 9

7. WATER SUPPLY FOR STEAM GENERATORS 9

8. FIRE SAFETY DURING OPERATIONS 10

9. ASSESS IMPACTS TO WILDLIFE AND ECOSYSTEM DURING PILOT STUDY 10

10. PROJECT TIME LINE 11

11. POST-REMEDIAL CONFIGURATION 12

12. MISCELLANEOUS COMMENTS 12

12.1 Clarification Comment 12

12.2 Why is a Sheet Pile Wall Less Expensive Than a Slurry Wall? 12

12.3 Can a Pilot Study of One or Two Years be Done in Another Location, Rather Than in This Populated Community? 13

12.4 Will EPA Bring in a Portable Generator to Provide Power if Electrical Resistance Heating is Used? 13

12.5 Will Any Portions of the Site be Available for Use Before Cleanup is Completed? 13

12.6 Is Contamination Present on the Sediment Cap in Eagle Harbor? 14

ATTACHMENT

Attachment 1 Comment Letters Received During the Proposed Plan Public Comment Period (October 4, 1999 - December 2, 1999)

Attachment 2 Summary of Comments Received During the Wyckoff Public Meeting Held October 21, 1999

WYCKOFF/EAGLE HARBOR
SUPERFUND SITE
BAINBRIDGE ISLAND, WASHINGTON

RECORD OF DECISION

RESPONSIVENESS SUMMARY

This document responds to comments received regarding the Proposed Plan for cleanup of the Wyckoff/Eagle Harbor Superfund Site, Soil and Groundwater Operable Units. Several of the reviewers provided similar comments on this document. Responses and discussions are organized by general topic. EPA's responses are presented in the first section of this Responsiveness Summary. Attachment 1 includes a copy of all original comments received on the Proposed Plan, and Attachment 2 summarizes the oral comments received during the Public Meeting held on October 21, 1999 at the Bainbridge Island Commons.

1. COST/RISK ANALYSIS OF NO ACTION AND CONTAINMENT

A group of reviewers requested EPA to estimate the damage, cleanup costs and operations that would be required if contaminants were not removed. They would like to know the risks and potential costs of leaving the contaminants in the ground.

The same group of reviewers also requested EPA to compare the level of continuing seepage of contaminants into Eagle Harbor that would result from selecting No Further Action (Alternative 1) with seepage levels anticipated with Alternatives 2 (Containment) and 3 (Thermal Remediation).

> EPA Response: EPA conducted a human health and ecological risk assessment for Eagle Harbor in 1987 and also in 1997 for the Soil and Groundwater Operable Units. Environmental risk in Eagle Harbor is indicated by harm to marine life living on or in the contaminated sediments. Liver and reproductive damage in Eagle Harbor bottom fish is well documented. EPA tests also show that the contaminated sediments are toxic to organisms such as small crustaceans and oyster larvae, which are important indicators of marine environmental health. Contamination was also found in fish, crab, and clam tissues, indicating uptake through direct contact with contaminated sediment or bioaccumulation through the food chain.
>
> The risk assessment found that if the contamination is not addressed at Wyckoff, human health and ecological effects would be unacceptable. Wyckoff groundwater and soil contain contamination that is carcinogenic to both humans and animals. If the contaminants are left alone, they would continue to seep out into Eagle Harbor, and would recontaminate the sediment cap that was put in place in 1993 and 1994. There is also a high risk of contaminants moving into the lower aquifer, a potential source of drinking water for the island. EPA recently observed pathways in the aquitard (the protective layer separating the upper and lower aquifer) that will eventually allow the creosote product to

enter the lower aquifer. The possibility exists that contamination of the lower aquifer has already occurred in areas we have not yet detected during field investigation activities.

Regarding the issue of costs, as the September 1999 Proposed Plan indicated, the costs of No Further Action is minimal compared to other alternatives. However, the continued release and migration of contaminants from the site represents a current and future risk to human health and the environment, which is not acceptable to EPA.

EPA has not quantified the level of creosote seepage into Eagle Harbor. However, seeps are continuously observed during periodic mapping events. As stated above, ongoing seepage would continue if no action is taken. Seepage would be eliminated with both containment alternatives (2a and 2b) and Alternative 3. However, as discussed in the Proposed Plan and in response #2, below, the costs of containment as presented in the Proposed Plan are 30-year estimates. The actual costs of the containment remedies would be ongoing in perpetuity, with yearly operation and maintenance costs as well as periodic replacements of the containment components (i.e., pump-and-treat system and barrier wall replacement/repair) unless a cost-effective treatment technology is employed in the future. Some operation and maintenance costs may be required under the Selected Remedy (Alternative 3) after thermal treatment is completed, however, the duration would be much shorter due to large amounts of contaminants expected to be removed. Under the current Superfund law, all operation and maintenance costs starting 10 years after the remedy is operational and functional would need to be bourne by the State of Washington Department of Ecology.

2. CONTAINMENT vs. THERMAL REMEDIATION

One group of reviewers preferred Alternative 2b, Containment with a Sheet Pile Wall. They found this alternative to be the most cost effective, safest, and of least impact to the community.

EPA Response: While EPA recognizes that Alternative 2b poses lesser impacts from the community standpoint in the short-term, we do not believe that this alternative would provide the greatest long-term protection of human health and the environment. As discussed in the September 1999 Proposed Plan, the containment remedies pose a potential of failure in the future as well as perpetual operation and maintenance costs (unless a cost-effective treatment technology is undertaken). There would also be future land use restrictions placed on this site with the containment alternatives. However, as Section 12 of the ROD indicates, Alternative 2b is the contingent, or fall-back remedy, if thermal treatment is not successful.

3. STEAM INJECTION vs. ELECTRICAL RESISTANCE HEATING

The same group of reviewers suggested that EPA should consider testing electrical resistance heating as well as steam injection during the pilot study. They suggested that careful site-specific review of the technologies should be undertaken before the preferred method is selected. Another group of reviewers stated their preference for electrical resistance heating over steam injection.

EPA Response: EPA has conducted a thorough review of existing data from the use of these two technologies at other sites. Additionally, EPA has been working closely with

experts in the field of electrical resistance heating. Based on our review and the recommendations of prominent thermal remediation professionals, it is clear that electrical heating alone would not accomplish the Wyckoff cleanup goals and would not be as cost effective as steam injection. However, it is firmly believed that electrical resistance heating would be a very useful technology to enhance the heating of this site and to aid steam injection in the recovery of contaminants. At this time, EPA plans to test the electrical resistance heating technology during the pilot study, as a supplement to steam injection.

4. MITIGATION COSTS

One reviewer noted that habitat mitigation costs are only included for Alternative 2a (Containment with a Slurry Wall). The reviewer requested an estimate of mitigation costs associated with Alternatives 2b (Containment with a Sheet Pile Wall), and Alternative 3 (Thermal Remediation).

EPA Response: It is estimated that mitigation for Alternative 2a would cost approximately $1.2 million due to permanent loss of 2-3 acres of intertidal habitat from the construction of an offshore berm and backfill for the slurry wall. As for the costs for habitat mitigation for Alternatives 2a and 3, because the sheet pile wall would not require significant offshore construction, the loss of intertidal habitat is estimated to be 0.6-0.9 acres. The costs to mitigate this loss would be approximately $250,000.

5. COMMUNITY IMPACTS/CONCERNS

Many reviewers raised concerns regarding the impacts to the community during the construction of the sheet pile wall and during operation of the thermal remediation system. These concerns and discussions are presented by subtopic below.

5.1 Sheet Pile Driving Noise Issues

Some reviewers are concerned about the level of noise that would be generated from the construction of the sheet pile wall at Wyckoff. When the Proposed Plan was published, it was anticipated that the sheet pile wall would be constructed during the months of August - December 2000. However, the reviewers suggested that the construction should be delayed until the winter months, from November 2000 - February 2001, when windows and doors would be closed, thus, minimizing noise disturbances to nearby communities. Also, it was suggested that the sheet piles be driven during the hours of 10:00 and 3:00, with a 45 minute break period, to minimize disturbances to residential activities. Finally, EPA was urged to engineer noise abatement measures to reduce offsite noise.

EPA Response: EPA understands the concerns of the community regarding noise levels. During our sheet pile driving test in September 1999, noise levels above 80 decibels (dB) were recorded in surrounding communities. For several reasons, the construction of the sheet pile wall is now anticipated to occur between November 2000 - February 2001. As noted by several reviewers, construction during winter months will help to minimize noise disturbance. EPA will continue to assess different noise abatement techniques and options

during the design phase of this project (February - June 2000). To the maximum extent practicable, EPA will utilize different noise abatement measures to reduce impacts to nearby communities (see also Section 12.3 of the ROD). The Washington Administrative Code (WAC 173-60) specified a noise limit of 60 dB from an industrial noise source to a residential receiving property. However, noises generated by construction sites due to construction-related activities are exempt from limits specified in the WAC between the hours of 7:00 a.m. and 10:00 p.m.

However, it is EPA's intent to minimize noise to the residential areas as much as possible. Sheet pile driving will be restricted to between the hours of 8:00 a.m. and 5:00 p.m. Of the two types of hammers EPA tested and noise monitored, the vibratory hammer generated louder, more annoying sounds for sustained periods than did the diesel hammer. However, because the piles were driven much more quickly with the vibratory hammer, the use of this device will minimize the total duration of the noise.

Based on our noise level assessment, the Wing Point community will have the highest noise levels because of its location close to the water, with a clear line of sight to the pile driving location. Neighborhoods such as Bill Point, Rockaway Beach, and Eagledale will be less affected by construction noise.

The timing of the sheet pile wall installation is crucial. The Washington State Department of Fish and Wildlife and the National Marine Fisheries Service agencies have banned in-water construction during the fish window of February 15 - August 15. Therefore, any in-water activities must be completed prior to this period.

5.2 Noise Levels During Thermal Remediation/Boiler Operation

Several reviewers also raised the concern that the steam boiler would likely be noisy and requested noise mitigation measures during the period of thermal remediation.

EPA Response: While it is unclear at this time what the noise levels would be during thermal operation, EPA will assess this concern during remedial design and during the pilot study phase of this project. Exceedances of noise levels per the Washington Administrative Code discussed above will be evaluated. Some possible controls to reduce system operation noise may include:

- Limiting vehicle traffic to daylight hours and non-rush-hour times
- Limiting vehicle traffic on ferries
- Delivering steam boiler fuel by barge
- Containing the steam boiler in a building
- Insulating steam pipes
- Enclosing pumps in buildings or vaults

Mitigation measures will be implemented during full-scale operation, if necessary.

5.3 Diesel Fuel vs. Propane Fuel

Some reviewers also specified a preference for propane as a fuel choice for use in the steam boilers. They are concerned about potential air emissions and odors associated with diesel fuel.

> EPA Response: During our preliminary assessment, it was determined that liquid propane is not a viable boiler fuel. While propane has been employed as a backup fuel source for natural gas fired boilers in the anticipated size range (25,000 to 75,000 lbs. of steam generated per hour), we have not been able to identify any boiler plants in this size range that use propane as a primary fuel source. Bulk storage of propane would be more costly as the vessels must be pressure rated. Also, the quantity of propane necessary for any given thermal capacity would exceed the quantity of diesel fuel oil. At the full firing rate for one week, approximately 109,000 gallons of fuel oil would be required, while approximately 170,000 gallons of propane would be necessary. In addition, a vaporization station that could handle the required propane flow would cost an additional $110,000.
>
> EPA will assess potential air emissions and odors associated with diesel fuel during the pilot study. EPA is required, by law, to meet the standards of the Clean Air Act and the Puget Sound Air Pollution Control Agency (PSAPCA) standards for emissions. Odor mitigation measures would be implemented, if necessary.

5.4 Barge Delivery of Fuel vs. Truck Delivery

Some reviewers stated their preference for using barge to transport fuel to the site. Transfer of fuel by truck would have an impact on the island's streets and highways.

> EPA Response: Due to concerns over truck traffic, EPA has determined that fuel oil delivered to the site by barge would be more appropriate.

5.5 Odors During System Operation

Another concern raised is the possibility of odor problems during system operation.

> EPA Response: It is possible that some odors may be generated from the site as part of the cleanup process. At this time, EPA is unable to quantify this issue, however, the pilot study will provide valuable information and any problems will be addressed, as appropriate.

5.6 Light Glare During System Operation

One group of reviewers suggested the use of light reduction methods to reduce glare in adjacent residential neighborhoods, such as shades on exterior lighting.

> EPA Response: It is unclear at this time how much of a problem this may be. To the extent practicable, EPA will incorporate this concern into the designs of a full-scale thermal cleanup project. Care will be taken to require light shields and guards to reduce the amount of direct or reflected light escaping from the property.

5.7 Site Landscape

One group of reviewers requested EPA to consider landscaping part of the spit area with vegetation to mask the thermal system equipment that could potentially be on-site for a period of 10 plus years of cleanup. Similarly, another group of reviewers suggested landscaping of the vapor cover.

> EPA Response: These comments and suggestions are noted. EPA does not typically use cleanup funds to landscape sites. To the extent possible, EPA will place the structures away from the shoreline toward the hillside. Also, tanks and equipment necessary for thermal remediation will be on-site only during the period of steaming, estimated to be a maximum of 3 years. After steaming, a significant amount process equipment will be removed. Beyond those years, even though the pumping and treating of contaminants will continue, the visual nuisance is not anticipated to be as significant.

5.8 Community Outreach During System Operation

A group of reviewers requested a community monitoring system and complaint response program that will address impacts to the adjacent residential communities quickly and effectively.

> EPA Response: EPA will identify the appropriate personnel, including on-site staff, for the community to contact should a problem arise.

5.9 Compare/Contrast Community Impacts Associated with Each Remedial Alternative

A group of reviewers requested further information comparing and contrasting the impacts of various cleanup alternatives to adjacent residential communities, and what specific steps will be taken to mitigate noise and air emissions in various alternatives. The reviewers also requested a comparison of time lines of each alternative with the estimate of time required for continuing operations.

> EPA Response: EPA has completed an evaluation and compared/contrasted the "nuisance factors" of the local community associated with each remedial alternative, i.e., noise, traffic, visual, and odors. This evaluation can be found in a report entitled, *Focused Feasibility Study, Comparative Analysis of Containment and Thermal Technologies,* dated April 1999. This report is located in EPA's Administrative Record and can be viewed at the Bainbridge Island library or at EPA's Record Center in Seattle.
>
> Please see the discussions above regarding EPA's responses to the noise and air emission mitigation questions, and response #10, below for a description of the thermal project time line.

6. DESIGN ISSUES

Reviewers raised a number of issues relative to the design of the remedy. Design issues and discussion are presented by subtopic below.

6.1 Proper Seating of Sheet Pile into Aquitard

A group of reviewers inquired about methods to assure that proper "seating" of the sheet pile wall into the aquitard and to avoid breaching of this confining layer.

> EPA Response: Strategies will be developed in the design phase to avoid damage to the aquitard by restricting the use of an impact hammer. As far as ensuring proper seating of the sheet pile wall into the aquitard, a geologist familiar with the Wyckoff subsurface strata will be at the site at all times during sheet pile driving to carefully monitor the event. The geologist will be comparing pile-tip depths, driving action, and penetration rates with data from corresponding well logs to determine the exact depths to which the piles should be driven in order to reach and be adequately seated into the aquitard material.

6.2 Heat Effects on Sheet Pile Joints

One reviewer expressed a concern of how heat will affect the malleability and inter-locking mechanisms of a sheet pile wall and ultimately the effectiveness of the wall to contain contaminants.

> EPA Response: Heat should not adversely affect the sheet pile joints since they do not need to be sealed or grouted. The type of piles that EPA has tested and selected for this site have close-fitting joints and are expected to perform as well as conventional piles without any need for joint sealants. Since all of the joint material will be of the same type, expansion and contraction with changing temperatures will be at similar rates, keeping the amount of contact between joint members at a high level throughout thermal operations. Thermal stresses along the wall should be accommodated by the flexibility inherent in the Z-shaped piling design.

6.3 NAPL Migration Thru the Aquitard into Lower Aquifers

One reviewer noted that the Proposed Plan included a figure which indicated potential migration of dissolved-phase contaminants and DNAPL through higher permeable areas of the aquitard into the lower aquifer. The reviewer requested more explanation of how the preferred alternative (Alternative 3) will affect migration of NAPLs into the lower aquifer and how EPA will address this concern.

> EPA Response: While it is true that there are areas around the site which DNAPL has found a pathway into the aquitard by means of higher permeability zones, EPA has not found an area where DNAPL has completely penetrated the aquitard. Based on the aquitard permeability data (hydraulic conductivity) and well logs collected to date, it is believed that the higher permeability zones primarily occur in a relatively small area in the central portion of the site. In recognizing this concern and in evaluating the effectiveness

of the steam injection remedy, EPA has conducted a series of NAPL density measurements as a function of temperature. Results indicate that DNAPL will become less dense than water (i.e., become LNAPL) with increasing temperatures. This is important because when NAPL becomes less dense than water, it will no longer have a tendency to move downward, and will be easier to recover as floating product.

An additional factor, which may have provided some protection for the lower aquifer, is the naturally occurring upward groundwater flow through the aquitard. Aggressive groundwater and NAPL pumping will be conducted during the thermal treatment of the upper aquifer, amplifying the existing upward gradient and providing further resistance to downward movement of contaminants.

6.4 NAPL Migration Through the Sheet Pile Wall

The same reviewer also requested additional information on how effective a sheet pile wall may be in stopping or reducing the migration of NAPLs currently seeping from the groundwater into the marine environment.

EPA Response: A sheet pile wall, if constructed properly and adequately seated into the aquitard, will substantially impede the migration of contaminants and possibly stop them altogether. EPA will be installing the thickest available sheet piles known with the tightest joints, similar or equal to the Frodingham Z-section steel piles. In addition, the thermal treatment strategy requires aggressive pumping inside the sheet pile wall, reducing groundwater levels below those outside the wall. This practice will induce an inward gradient which will act as further insurance against offsite transport of contaminants.

6.5 Thermal Remediation of Dioxins/Furans

A reviewer inquired about how EPA intends to remediate dioxins and furans from the site.

EPA Response: A steam injection experiment was performed in a laboratory study to assess whether polychlorinated dioxins and furans can be recovered from the soil by steam injection. The results of this experiment show that significant reductions in the dioxin concentrations may not be possible by steam injection due to its low vapor pressures. Since vaporization is the main recovery mechanism in these laboratory experiments, significant recovery of these very low vapor pressure compounds would not be possible. However, the importance of different recovery mechanisms in the field, such as recovery in the liquid phase, may aid in removing more of the dioxins than were recovered in the lab.

EPA will further evaluate the remediation of dioxins and furans by thermal means during the on-site pilot study. Contingencies such as a surface soil cap or institutional controls will be developed to address this area of uncertainty.

6.6 Thermal Remediation of High Molecular Weight PAHs

One reviewer noted that lab results show that steam injection is effective in removing total PAHs from soil; however, high molecular weight PAHs such as benzo(a)pyrene remain in high concentrations. The reviewer asked how EPA plans to remediate these remaining PAH constituents.

> EPA Response: The results from the initial steam injection experiment show that 99 percent of PAHs can be removed when the creosote is composed mainly of the more volatile components. When the soil contains greater amounts of the higher molecular weight PAHs, somewhat longer periods of steaming will be needed to achieve the same removal efficiency. The leaching test for this experiment showed that when the soil is cooled, very little of the remaining PAHs will dissolve into the aqueous phase, which means that the remaining contaminants will not move into the groundwater, and thus, into surface water and sediments. However, when the soil is still hot, significant amounts of the remaining PAHs will dissolve into the aqueous phase, even after steam injection has ended, which will help to increase recovery of the contaminants.
>
> Additionally, it has been demonstrated at the Visalia Steam Remediation Project that oxidation and biodegradation of residual contaminants will occur under the conditions that are likely to exist after the completion of steam injection. EPA is in the process of evaluating these processes and their ability to destroy the high molecular weight PAHs that remain after steam injection.

6.7 Vapor Cover Materials

One group of reviewers requested EPA to consider the use of plastic or other vapor barrier methods to find the best and most compatible method.

> EPA Response: EPA will evaluate the most technically sound and heat-compatible vapor cover during the project design. Various vapor cover types and materials may also be evaluated during the on-site pilot test. This vapor cover will be removed when thermal cleanup is complete.

7. WATER SUPPLY FOR STEAM GENERATORS

A number of reviewers objected to EPA's plan to drill a deep production well to the west of the Former Process Area. EPA would have used this well to evaluate sustainable aquifer yield and to assess potential impacts to existing water rights holders. It is EPA's preference to use the groundwater supply for steam generation if there is adequate yield and if pumping would not impair current users of the groundwater supply. However, concerns that have been expressed include: (1) preservation and conservation of the island's only source of domestic water supply; and (2) potential for introduction of contamination into the lower aquifer from the drilling of a production well.

These reviewers requested EPA to seriously consider using the City of Bainbridge Island's sewage treatment plant effluent, located across Eagle Harbor, as the source of water for steam generation.

Another group of reviewers requested EPA to retest and monitor the Bill Point water supply wells to ensure that EPA's pumping of the deep aquifer for water would not jeopardize this existing resource.

> EPA Response: EPA would like to assess all possible water supply alternatives, including estimated costs, prior to making a final decision. EPA will be conducting these evaluations during the design phase of this project (see also Section 12.3 of the ROD). The City's proposed option of the sewage treatment plant effluent is an option that warrants attention. However, if the effluent option proves cost-prohibitive, then EPA would continue with plans to install a groundwater production well outside of the highly contaminated areas on the Wyckoff property. It is potentially difficult to transport the water across Eagle Harbor and laying a pipe on the sediment to Wyckoff may be unacceptable due to disturbances to the sediment cap. This issue requires additional research and discussion with State agencies before a decision can be made. A maximum of 200 gallons per minute (gpm) of water is anticipated for thermal remediation.
>
> If it is ultimately decided that an on-site water well needs to be installed, every precaution will be taken to eliminate the potential of contaminants from entering the deep aquifers. EPA will also conduct a pumping test of this well and develop a monitoring program to ensure that existing nearby users would not be affected. If an effect is determined, EPA will consider other options to minimize the effect on neighboring water users.

8. FIRE SAFETY DURING OPERATIONS

A few reviewers raised a concern of potential fire incidents associated with the preferred cleanup alternative and requested a careful analysis of fire safety. They asked EPA to coordinate with the local fire department.

> EPA Response: EPA is very concerned about the safety of on-site workers as well as nearby residents should a fire occur. EPA has always been very conscientious about development of a health and safety plan, as required by law, for every activity that occurs on-site. Because of a potentially higher risk of a fire due to fuel being stored on-site for thermal remediation, EPA will conduct a thorough review of fire safety and will develop a fire prevention plan. This plan will also include provisions on responding to potential fires. EPA will consult with local authorities, especially the fire department.

9. ASSESS IMPACTS TO WILDLIFE AND ECOSYSTEM DURING PILOT STUDY

One reviewer asked EPA to evaluate the possible negative impacts the pilot project may have to the surrounding ecosystem and habitats, particularly in the intertidal zone. Adverse impacts could include: temperature increases in water and sediment, increased migration of contaminants to offshore areas, and changes in sediment size and/or transport due to increased wave action from the sheet pile wall. EPA was requested to weigh any negative impacts to the ecological community against cleanup successes when making the final cleanup decision.

The reviewer also requested an explanation of the actions that will be taken to minimize effects to wildlife from the noise and odor of the remedial process or whether displacement of wildlife

during remediation activities should be a concern.

EPA Response: EPA has been closely coordinating with the Federal and State Agencies (State of Washington Department of Ecology, Department of Natural Resources, Department of Fish and Wildlife, U.S. Fish and Wildlife Service, National Marine Fisheries Service, National Oceanic and Atmospheric Administration) and the Suquamish Tribe to develop a plan to monitor surrounding habitats and thermal effects in the intertidal zone during the pilot study and full-scale remediation. The pilot study, along with thermal effects monitoring, will provide valuable information to Trustee Agencies and EPA. EPA will incorporate the data gained during these studies into our final decision process.

In addition, EPA is in the process of completing an updated Biological Assessment pursuant to the Endangered Species Act, in coordination with the Natural Resource Agencies. Previous assessments failed to identify use of the site or nesting by species of concern. Construction of the sheet pile wall, likely to cause the most disturbance to wildlife, will occur outside Bald Eagle and Peregrine Falcon nesting periods and the State mandated fish window. Other wildlife in the area tend to be urban adapted species such as deer, Canadian geese and gulls.

10. PROJECT TIME LINE

One group of reviewers requested an overall description of the term of the preferred alternative with details of each phase that describes the potential impacts to the community for each phase.

EPA Response: The time line for the thermal remediation project is as follows:

Phase	Time Frame	Years
Pilot Study[a]	1-2 years	2000 - 2002
Full-Scale Designs[b]	1 year	2002
Full-Scale System Construction	1 year	2003
Full-Scale System On-Line		2004
Steam Injection & Contaminant Recovery	3 years	2004 - 2007
Continued Contaminant Recovery	5 years	2007 - 2012
Full-Scale Cleanup Completed		2012
Post-Remedial Monitoring	2 years	2012 - 2014
Ongoing Natural Oxidation/Biodegradation	5 or more years	2014 & beyond

[a] Stake-holders and interested parties will have opportunities to provide input during the designs and operation of the pilot study, and will have access to the data generated during the pilot study.
[b] If results of the pilot are favorable after the 1st year of operation, then the designs for the full-scale remediation system can commence.

The specific impacts to the community for each phase of the project are unclear at this time. One of the goals of the pilot study is to fully evaluate these issues and design for mitigation measures, as appropriate, during the full-scale cleanup of the project.

11. POST-REMEDIAL CONFIGURATION

One reviewer noted that the Proposed Plan did not discuss post-remedial configuration (what the

site will look like when cleanup is complete). The commenter hoped that the same level of investigation and planning put forth to date is utilized to create a final post-remedial intertidal plan that truly enhances the aquatic ecosystem. EPA was also encouraged to work with the community to define a "vision" for the site.

EPA Response: Much of the post-remedial configuration will be determined by the mitigation plan for the site. EPA has been and will continue to coordinate closely with the Natural Resource Agencies, the Suquamish Tribe, and the City of Bainbridge Island to develop an acceptable mitigation plan for the sheet pile wall, and to address future land use and resource issues. Mitigation will be required because sections of the sheet pile wall will be constructed offshore, resulting in loss of habitat. The mitigation plan likely will modify large parts of the western shoreline to create a gently sloping beach that will significantly enhance habitat and ecosystem at the Wyckoff site. As part of the mitigation effort, EPA will also develop protective measures to support and protect functions of nearshore habitat. EPA will include the community groups in design of the plan, as appropriate.

12. MISCELLANEOUS COMMENTS

12.1 Clarification Comment

One reviewer requested clarification of the statement in the Proposed Plan, "Site specific contaminant concentration limits that are protective of the environment are being developed for the Former Process Area groundwater."

EPA Response: EPA, in conjunction with the Washington State Department of Ecology, has been developing alternate concentration limits (ACLs) for groundwater that must be achieved at the mudline in order to be protective of marine water quality standards, surface water standards, and sediment management standards. These numbers were necessary because, due to the non-potable quality of the upper aquifer groundwater, EPA will not be cleaning the groundwater to drinking water standards.

Pending completion of the fate and transport analysis which will provide ACLs for site groundwater, the groundwater cleanup levels shown in Table 13 of the ROD may be used as conservative indicators of aqueous contaminant concentrations that must be achieved within the uplands portion of the site.

12.2 Why is a Sheet Pile Wall Less Expensive Than a Slurry Wall?

EPA Response: In general, slurry walls are more expensive than sheet pile walls because of the high costs involved in excavating the wall "slot", mixing and transporting the slurry which keeps the excavation open, and preparing the specially designed contaminant-resistant backfill material, which forms the final wall structure. In contrast, sheet pile walls are formed simply by driving interlocking steel panels to the required depth, using less equipment, time and materials than the equivalent slurry wall construction. In addition, site specific conditions at the Wyckoff property present major constructability issues associated with equipment limitations, buried debris, bulkheads, and tie-backs.

Consequently, the slurry wall would have to be constructed off-shore, requiring a significant amount of fill in the intertidal/subtidal area. These construction issues double the typical slurry wall construction costs. Additional construction costs would be incurred to mitigate for the 2-3 acres of lost habitat caused by the off-shore fill.

12.3 Can a Pilot Study of One or Two Years be Done in Another Location, Rather Than in This Populated Community?

EPA Response: One key reason for conducting a pilot study at the Wyckoff site is to obtain site-specific data regarding the technology's ability to cleanup the soil and groundwater to protective standards. Pilot studies as well as full-scale cleanup projects using steam injection have been done at other sites. However, it is difficult to extrapolate the achievements at those sites to Wyckoff because every site is different (e.g., geologic and hydrologic conditions, site location and configuration, contaminant properties, etc.). In addition, a pilot study at the site is necessary to obtain engineering data for appropriate design of the cleanup process tailored to Wyckoff. Finally, EPA believes that it is necessary to have site-specific performance information in order to make a prudent and cost-effective decision regarding the most appropriate cleanup approach.

As discussed above, EPA will be taking measures to minimize community impacts as much as possible.

12.4 Will EPA Bring a Portable Generator to Provide Power if Electrical Resistance Heating is Used?

EPA Response: Based on our preliminary analysis and discussions with Puget Sound Energy, it appears that there will be enough electrical capacity in the current transformers located at Wyckoff to accommodate implementation of Electrical Resistance Heating process at this site. EPA's use of this electrical power should not impact the community supply.

12.5 Will Any Portions of the Site be Available for Use Before Cleanup is Completed?

EPA Response: The majority of the cleanup actions will take place within the Former Process Area. If the pilot test is successful, EPA will consolidate the Former Log Storage/Peeler Area soil within the Former Process Area for thermal treatment. As a result, the entire western portion of the Wyckoff property will be clean. However, the Wyckoff site is being managed by an Environmental Trust, which makes all the decisions associated with property management and sale of the property. Once EPA has certified that cleanup actions are complete, it is within the Trust's discretion to make cleaned areas of the site available as it sees fit.

12.6 Is Contamination Present on the Sediment Cap in Eagle Harbor?

EPA Response: The majority of the cap meets the cleanup goals established in the East Harbor September 1994 ROD for subtidal sediments. However, recent sampling of the sediment cap indicates contamination above cleanup goals exists at a few locations on the southern portion of the cap. One possible source of this contamination is the Wyckoff property. Creosote has been observed seeping through the bulkhead on the western side of the Wyckoff property onto the floor of the harbor. EPA has taken several actions to control the flow of creosote into the harbor along the bulkhead. Installation of a sheet pile wall along the shoreline will effectively eliminate the source of contamination to the harbor.

WAGE DETERMINATION NO: 94-2559 REV (20) AREA: WA,BREMETON

REGISTER OF WAGE DETERMINATIONS UNDER | U.S. DEPARTMENT OF LABOR
FOR OFFICIAL USE ONLY BY FEDERAL AGENCIES PARTICIPATING IN MOU WITH DOL
| WASHINGTON D.C. 20210
|
|
|
| Wage Determination No.: 1994-2559
William W.Gross Division of | Revision No.: 20
Director Wage Determinations| Date Of Last Revision: 07/13/2001

State: WashingtonArea: Washington Counties of Clallam, Grays Harbor, Jefferson, Kitsap, Mason

Fringe Benefits Required Follow the Occupational Listing

OCCUPATION TITLE	MINIMUM WAGE RATE
Administrative Support and Clerical Occupations	
Accounting Clerk I	10.02
Accounting Clerk II	11.51
Accounting Clerk III	13.39
Accounting Clerk IV	15.44
Court Reporter	13.85
Dispatcher, Motor Vehicle	13.85
Document Preparation Clerk	11.90
Duplicating Machine Operator	11.90
Film/Tape Librarian	11.02
General Clerk I	8.56
General Clerk II	9.59
General Clerk III	11.64
General Clerk IV	12.33
Housing Referral Assistant	15.31
Key Entry Operator I	10.77
Key Entry Operator II	11.90
Messenger (Courier)	8.95
Order Clerk I	9.59
Order Clerk II	13.35
Personnel Assistant (Employment) I	11.54
Personnel Assistant (Employment) II	12.23
Personnel Assistant (Employment) III	13.62
Personnel Assistant (Employment) IV	15.27
Production Control Clerk	14.31
Rental Clerk	10.84
Scheduler, Maintenance	12.54
Secretary I	12.67
Secretary II	13.79
Secretary III	15.33
Secretary IV	18.09
Secretary V	21.71
Service Order Dispatcher	11.66
Stenographer I	13.66
Stenographer II	15.33
Supply Technician	18.09

Survey Worker (Interviewer)	12.87
Switchboard Operator-Receptionist	10.39
Test Examiner	13.79
Test Proctor	13.79
Travel Clerk I	9.10
Travel Clerk II	9.90
Travel Clerk III	10.50
Word Processor I	12.06
Word Processor II	13.65
Word Processor III	14.24
Automatic Data Processing Occupations	
Computer Data Librarian	10.87
Computer Operator I	12.50
Computer Operator II	13.98
Computer Operator III	15.58
Computer Operator IV	18.14
Computer Operator V	20.09
Computer Programmer I (1)	13.69
Computer Programmer II (1)	17.32
Computer Programmer III (1)	20.60
Computer Programmer IV (1)	24.92
Computer Systems Analyst I (1)	17.95
Computer Systems Analyst II (1)	20.82
Computer Systems Analyst III (1)	24.56
Peripheral Equipment Operator	12.50
Automotive Service Occupations	
Automotive Body Repairer, Fiberglass	17.54
Automotive Glass Installer	16.43
Automotive Worker	16.43
Electrician, Automotive	17.24
Mobile Equipment Servicer	15.33
Motor Equipment Metal Mechanic	17.54
Motor Equipment Metal Worker	16.43
Motor Vehicle Mechanic	17.54
Motor Vehicle Mechanic Helper	14.76
Motor Vehicle Upholstery Worker	16.19
Motor Vehicle Wrecker	16.43
Painter, Automotive	16.97
Radiator Repair Specialist	16.43
Tire Repairer	14.81
Transmission Repair Specialist	17.54
Food Preparation and Service Occupations	
Baker	12.59
Cook I	11.74
Cook II	12.59
Dishwasher	9.95
Food Service Worker	9.39
Meat Cutter	12.89
Waiter/Waitress	10.44
Furniture Maintenance and Repair Occupations	
Electrostatic Spray Painter	16.97
Furniture Handler	14.68
Furniture Refinisher	16.97
Furniture Refinisher Helper	14.76
Furniture Repairer, Minor	15.88
Upholsterer	16.97
General Services and Support Occupations	

Cleaner, Vehicles	9.95
Elevator Operator	9.95
Gardener	11.74
House Keeping Aid I	9.33
House Keeping Aid II	9.95
Janitor	9.95
Laborer, Grounds Maintenance	10.44
Maid or Houseman	9.39
Pest Controller	12.16
Refuse Collector	11.44
Tractor Operator	11.31
Window Cleaner	10.44
Health Occupations	
Dental Assistant	12.32
Emergency Medical Technician (EMT)/Paramedic/Ambulance Driver	13.04
Licensed Practical Nurse I	10.24
Licensed Practical Nurse II	11.49
Licensed Practical Nurse III	12.86
Medical Assistant	10.24
Medical Laboratory Technician	11.49
Medical Record Clerk	9.99
Medical Record Technician	13.85
Nursing Assistant I	8.35
Nursing Assistant II	8.25
Nursing Assistant III	9.75
Nursing Assistant IV	11.52
Pharmacy Technician	12.46
Phlebotomist	11.49
Registered Nurse I	15.93
Registered Nurse II	19.48
Registered Nurse II, Specialist	19.48
Registered Nurse III	23.58
Registered Nurse III, Anesthetist	23.58
Registered Nurse IV	28.26
Information and Arts Occupations	
Audiovisual Librarian	13.90
Exhibits Specialist I	15.49
Exhibits Specialist II	17.62
Exhibits Specialist III	21.19
Illustrator I	15.49
Illustrator II	17.62
Illustrator III	21.19
Librarian	20.53
Library Technician	12.87
Photographer I	13.09
Photographer II	15.49
Photographer III	18.04
Photographer IV	21.19
Photographer V	25.63
Laundry, Dry Cleaning, Pressing and Related Occupations	
Assembler	7.38
Counter Attendant	7.38
Dry Cleaner	8.23
Finisher, Flatwork, Machine	7.38
Presser, Hand	7.38
Presser, Machine, Drycleaning	7.38
Presser, Machine, Shirts	7.38

Presser, Machine, Wearing Apparel, Laundry	7.38
Sewing Machine Operator	9.12
Tailor	9.67
Washer, Machine	7.73
Machine Tool Operation and Repair Occupations	
Machine-Tool Operator (Toolroom)	16.97
Tool and Die Maker	19.18
Material Handling and Packing Occupations	
Forklift Operator	17.65
Fuel Distribution System Operator	15.20
Material Coordinator	13.38
Material Expediter	13.38
Material Handling Laborer	13.58
Order Filler	13.15
Production Line Worker (Food Processing)	12.45
Shipping Packer	9.21
Shipping/Receiving Clerk	13.74
Stock Clerk (Shelf Stocker; Store Worker II)	14.38
Store Worker I	12.23
Tools and Parts Attendant	14.67
Warehouse Specialist	14.32
Mechanics and Maintenance and Repair Occupations	
Aircraft Mechanic	17.23
Aircraft Mechanic Helper	14.76
Aircraft Quality Control Inspector	18.10
Aircraft Servicer	15.88
Aircraft Worker	16.43
Appliance Mechanic	16.97
Bicycle Repairer	14.81
Cable Splicer	17.54
Carpenter, Maintenance	17.78
Carpet Layer	16.43
Electrician, Maintenance	17.54
Electronics Technician, Maintenance I	16.43
Electronics Technician, Maintenance II	16.97
Electronics Technician, Maintenance III	17.54
Fabric Worker	15.88
Fire Alarm System Mechanic	17.54
Fire Extinguisher Repairer	15.69
Fuel Distribution System Mechanic	17.54
General Maintenance Worker	16.43
Heating, Refrigeration and Air Conditioning Mechanic	17.98
Heavy Equipment Mechanic	17.54
Heavy Equipment Operator	17.54
Instrument Mechanic	17.54
Laborer	11.44
Locksmith	16.97
Machinery Maintenance Mechanic	17.54
Machinist, Maintenance	17.54
Maintenance Trades Helper	14.76
Millwright	17.54
Office Appliance Repairer	16.97
Painter, Aircraft	16.97
Painter, Maintenance	16.97
Pipefitter, Maintenance	17.54
Plumber, Maintenance	16.97
Pneudraulic Systems Mechanic	17.54

Rigger	16.97
Scale Mechanic	16.43
Sheet-Metal Worker, Maintenance	17.54
Small Engine Mechanic	16.43
Telecommunication Mechanic I	17.54
Telecommunication Mechanic II	18.10
Telephone Lineman	17.54
Welder, Combination, Maintenance	17.54
Well Driller	17.54
Woodcraft Worker	17.54
Woodworker	16.19
Miscellaneous Occupations	
Animal Caretaker	10.90
Carnival Equipment Operator	11.31
Carnival Equipment Repairer	11.75
Carnival Worker	9.95
Cashier	7.29
Desk Clerk	9.28
Embalmer	18.95
Lifeguard	7.96
Mortician	18.95
Park Attendant (Aide)	10.01
Photofinishing Worker (Photo Lab Tech., Darkroom Tech)	6.92
Recreation Specialist	12.56
Recycling Worker	13.01
Sales Clerk	7.96
School Crossing Guard (Crosswalk Attendant)	9.95
Sport Official	6.92
Survey Party Chief (Chief of Party)	13.50
Surveying Aide	6.34
Surveying Technician (Instr. Person/Surveyor Asst./Instr.)	8.70
Swimming Pool Operator	12.59
Vending Machine Attendant	11.31
Vending Machine Repairer	12.59
Vending Machine Repairer Helper	11.31
Personal Needs Occupations	
Child Care Attendant	7.29
Child Care Center Clerk	9.10
Chore Aid	9.39
Homemaker	12.16
Plant and System Operation Occupations	
Boiler Tender	20.17
Sewage Plant Operator	18.41
Stationary Engineer	20.17
Ventilation Equipment Tender	14.76
Water Treatment Plant Operator	18.41
Protective Service Occupations	
Alarm Monitor	12.17
Corrections Officer	18.00
Court Security Officer	22.90
Detention Officer	22.90
Firefighter	22.32
Guard I	9.38
Guard II	14.00
Police Officer	23.48
Stevedoring/Longshoremen Occupations	
Blocker and Bracer	13.86

Hatch Tender	13.86
Line Handler	13.86
Stevedore I	13.38
Stevedore II	14.31
Technical Occupations	
Air Traffic Control Specialist, Center (2)	27.69
Air Traffic Control Specialist, Station (2)	19.10
Air Traffic Control Specialist, Terminal (2)	21.03
Archeological Technician I	12.87
Archeological Technician II	14.40
Archeological Technician III	17.82
Cartographic Technician	20.49
Civil Engineering Technician	17.82
Computer Based Training (CBT) Specialist/ Instructor	17.95
Drafter I	11.32
Drafter II	13.09
Drafter III	15.49
Drafter IV	17.82
Engineering Technician I	11.32
Engineering Technician II	13.09
Engineering Technician III	15.49
Engineering Technician IV	17.82
Engineering Technician V	21.80
Engineering Technician VI	26.36
Environmental Technician	18.14
Flight Simulator/Instructor (Pilot)	18.10
Graphic Artist	16.51
Instructor	18.95
Laboratory Technician	14.12
Mathematical Technician	15.77
Paralegal/Legal Assistant I	14.54
Paralegal/Legal Assistant II	17.94
Paralegal/Legal Assistant III	21.95
Paralegal/Legal Assistant IV	25.76
Photooptics Technician	15.77
Technical Writer	22.93
Unexploded (UXO) Safety Escort	17.60
Unexploded (UXO) Sweep Personnel	17.60
Unexploded Ordnance (UXO) Technician I	17.60
Unexploded Ordnance (UXO) Technician II	21.29
Unexploded Ordnance (UXO) Technician III	25.52
Weather Observer, Combined Upper Air and Surface Programs (3)	13.55
Weather Observer, Senior (3)	15.77
Weather Observer, Upper Air (3)	13.55
Transportation/ Mobile Equipment Operation Occupations	
Bus Driver	14.31
Parking and Lot Attendant	10.46
Shuttle Bus Driver	12.35
Taxi Driver	11.89
Truckdriver, Heavy Truck	15.06
Truckdriver, Light Truck	12.35
Truckdriver, Medium Truck	14.90
Truckdriver, Tractor-Trailer	15.84

ALL OCCUPATIONS LISTED ABOVE RECEIVE THE FOLLOWING BENEFITS:
HEALTH & WELFARE: $2.02 an hour or $80.80 a week or $350.13 a month.

VACATION: 2 weeks paid vacation after 1 year of service with a contractor or successor; 3 weeks after 5 years, and 4 weeks after 15 years. Length of service includes the whole span of continuous service with the present contractor or successor, wherever employed, and with the predecessor contractors in the performance of similar work at the same Federal facility.
(Reg. 29 CFR4.173)
HOLIDAYS: A minimum of ten paid holidays per year: New Year's Day, Martin Luther King Jr.'s Birthday, Washington's Birthday, Memorial Day, Independence Day, Labor Day, Columbus Day, Veterans' Day, Thanksgiving Day, and Christmas Day. (A contractor may substitute for any of the named holidays another day off with pay in accordance with a plan communicated to the employees involved.) (See 29 CFR 4.174)
THE OCCUPATIONS WHICH HAVE PARENTHESES AFTER THEM RECEIVE THE FOLLOWING BENEFITS (as numbered):
1) Does not apply to employees employed in a bona fide executive, administrative, or professional capacity as defined and delineated in 29 CFR 541. (See CFR 4.156)
2) APPLICABLE TO AIR TRAFFIC CONTROLLERS ONLY - NIGHT DIFFERENTIAL: An employee is entitled to pay for all work performed between the hours of 6:00 P.M. and 6:00 A.M. at the rate of basic pay plus a night pay differential amounting to 10 percent of the rate of basic pay.
3) WEATHER OBSERVERS - NIGHT PAY & SUNDAY PAY: If you work at night as part of a regular tour of duty, you will earn a night differential and receive an additional 10% of basic pay for any hours worked between 6pm and 6am. If you are a full-time employed (40 hours a week) and Sunday is part of your regularly scheduled workweek, you are paid at your rate of basic pay plus a Sunday premium of 25% of your basic rate for each hour of Sunday work which is not overti me (i.e. occasional work on Sunday outside the normal tour of duty is considered overtime work).
HAZARDOUS PAY DIFFERENTIAL: An 8 percent differential is applicable to employees employed in a position that represents a high degree of hazard when working with or in close proximity to ordinance, explosives, and incendiary materials. This includes work such as screening, blending, dying, mixing, and pressing of sensitive ordance, explosives,and pyrotechnic compositions such as lead azide, black powder and photoflash powder. All dry-house activities involving propell ants or explosives.
Demilitarization, modification, renovation, demolition, and maintenance operations on sensitive ordnance, explosives and incendiary materials. All operations involving regrading and cleaning of artillery ranges. A 4 percent differential is applicable to employees employed in a position that represents a low degree of hazard when working with, or in close proximity to ordance, (or employees possibly adjacent to) explosives and incendiary materials which involves potential injury such as laceration of hands, face, or arms of the employee engaged in the operation, irritation of the skin, minor burns and the like; minimal damage to immediate or adjacent work area or equipment being used. All operations involving, unloading, storage, and hauling of ordance, explosive, and incendiary ordnance material other than small arms ammunition. These differentials are only applicable to work that has been specifically designated by the agency for ordance, explosives, and incendiary material differential pay.
** UNIFORM ALLOWANCE **
If employees are required to wear uniforms in the performance of this contract (either by the terms of the Government contract, by the employer, by the state or local law, etc.), the cost of furnishing such uniforms and maintaining (by laundering or dry cleaning) such uniforms is an expense that may not be borne by an employee where such cost reduces the hourly rate below that required by the wage determination. The Department of Labor will accept payment in accordan ce with the following standards as compliance:

The contractor or subcontractor is required to furnish all employees with an adequate number of uniforms without cost or to reimburse employees for the actual cost of the uniforms. In addition, where uniform cleaning and maintenance is made the responsibility of the employee, all contractors and subcontractors subject to this wage determination shall (in the absence of a bona fide collective bargaining agreement providing for a different amount, or the furnishing of contrary affirmative proof as to the actual cost), reimburse all employees for such cleaning and maintenance at a rate of $3.35 per week (or $.67 cents per day). However, in those instances where the uniforms furnished are made of "wash and wear" materials, may be routinely washed and dried with other personal garments, and do not require any special treatment such as dry cleaning, daily washing, or commercial laundering in order to meet the cleanliness or appearance standards set by the terms of the Government contract, by the contractor, by law, or by the nature of the work, there is no requirement that employees be reimbursed for uniform maintenance costs.

** NOTES APPLYING TO THIS WAGE DETERMINATION **

Source of Occupational Title and Descriptions:

The duties of employees under job titles listed are those described in the "Service Contract Act Directory of Occupations,"Fourth Edition, January 1993, as amended by the Third Supplement, dated March 1997, unless otherwise indicated. This publication may be obtained from the Superintendent of Documents, at 202-783-3238, or by writing to the Superintendent of Documents, U.S. Government Printing Office, Washington, D.C. 20402. Copies of specific job descriptions may also be obtained from the appropriate contracting officer.

REQUEST FOR AUTHORIZATION OF ADDITIONAL CLASSIFICATION AND WAGE RATE {Standard Form 1444 (SF 1444)}

Conformance Process:

The contracting officer shall require that any class of service employee which is not listed herein and which is to be employed under the contract (i.e., the work to be performed is not performed by any classification listed in the wage determination), be classified by the contractor so as to provide a reasonable relationship (i.e., appropriate level of skill comparison) between such unlisted classifications and the classifications listed in the wage determination. Such conformed classes of employees shall be paid the monetary wages and furnished the fringe benefits as are determined. Such conforming process shall be initiated by the contractor prior to the performance of contract work by such unlisted class(es) of employees. The conformed classification, wage rate, and/or fringe benefits shall be retroactive to the commencement date of the contract. {See Section4.6 (C)(vi)} When multiple wage determinations are included in a contract, a separate SF 1444 should be prepared for each wage determination to which a class(es) is to be conformed. The process for preparing a conformance request is as follows:

1) When preparing the bid, the contractor identifies the need for a conformed occupation(s) and computes a proposed rate(s).

2) After contract award, the contractor prepares a written report listing in order proposed classification title(s), a Federal grade equivalency (FGE) for each proposed classification(s), job description(s), and rationale for proposed wage rate(s), including information regarding the agreement or disagreement of the authorized representative of the employees involved, or where there is no authorized representative, the employees themselves. This report should be submitted to the contracting officer no later than 30 days after such unlisted class(es) of employees performs any contract work.

3) The contracting officer reviews the proposed action and promptly submits a report of the action, together with the agency's recommendations and pertinent information including the position of the contractor and the employees, to the Wage and Hour Division, Employment Standards Administration, U.S. Department of Labor, for review. (See section 4.6(b)(2) of Regulations 29 CFR Part 4).

4) Within 30 days of receipt, the Wage and Hour Division approves, modifies, or disapproves the action via transmittal to the agency contracting officer, or notifies the contracting officer that additional time will be required to process the request.
5) The contracting officer transmits the Wage and Hour decision to the contractor.
6) The contractor informs the affected employees. Information required by the Regulations must be submitted on SF 1444 or bond paper. When preparing a conformance request, the "Service Contract Act Directory of Occupations" (the Directory) should be used to compare job definitions to insure that duties requested are not performed by a classification already listed in the wage determination. Remember, it is not the job title, but the required tasks that determine whether a class is included in an established wage determination. Conformances may not be used to artificially split, combine, or subdivide classifications listed in the wage determination.
&&&&&&&&&&