AMENDMENT OF SOLICITATION/MODIFICATION OF CONTRACT

1. CONTRACT ID CODE	PAGE	OF PAGES
J	1	2

2. AMENDMENT/MODIFICATION NO.	3. EFFECTIVE DATE	4. REQUISITION/PURCHASE REQ. NO.	5. PROJECT NO.(If applicable)
0004	16-Sep-2004	W68MD9-4201-7538	

6. ISSUED BY CODE W912DW

USA ENGINEER DISTRICT, SEATTLE
ATTN: CENWS-CT
4735 EAST MARGINAL WAY SOUTH
SEATTLE WA 98134-2329

7. ADMINISTERED BY (If other than item 6) CODE

See Item 6

8. NAME AND ADDRESS OF CONTRACTOR (No., Street, County, State and Zip Code)

CODE FACILITY CODE

X	9A. AMENDMENT OF SOLICITATION NO. W912DW-04-R-0039
X	9B. DATED (SEE ITEM 11) 19-Aug-2004
	10A. MOD. OF CONTRACT/ORDER NO.
	10B. DATED (SEE ITEM 13)

11. THIS ITEM ONLY APPLIES TO AMENDMENTS OF SOLICITATIONS

[X] The above numbered solicitation is amended as set forth in Item 14. The hour and date specified for receipt of Offer [ ] is extended, [X] is not extended.

Offer must acknowledge receipt of this amendment prior to the hour and date specified in the solicitation or as amended by one of the following methods: (a) By completing Items 8 and 15, and returning 0 copies of the amendment; (b) By acknowledging receipt of this amendment on each copy of the offer submitted; or (c) By separate letter or telegram which includes a reference to the solicitation and amendment numbers. FAILURE OF YOUR ACKNOWLEDGMENT TO BE RECEIVED AT THE PLACE DESIGNATED FOR THE RECEIPT OF OFFERS PRIOR TO THE HOUR AND DATE SPECIFIED MAY RESULT IN REJECTION OF YOUR OFFER. If by virtue of this amendment you desire to change an offer already submitted, such change may be made by telegram or letter, provided each telegram or letter makes reference to the solicitation and this amendment, and is received prior to the opening hour and date specified.

12. ACCOUNTING AND APPROPRIATION DATA (If required)

13. THIS ITEM APPLIES ONLY TO MODIFICATIONS OF CONTRACTS/ORDERS. IT MODIFIES THE CONTRACT/ORDER NO. AS DESCRIBED IN ITEM 14.

[ ] A. THIS CHANGE ORDER IS ISSUED PURSUANT TO: (Specify authority) THE CHANGES SET FORTH IN ITEM 14 ARE MADE IN THE CONTRACT ORDER NO. IN ITEM 10A.

[ ] B. THE ABOVE NUMBERED CONTRACT/ORDER IS MODIFIED TO REFLECT THE ADMINISTRATIVE CHANGES (such as changes in paying office, appropriation date, etc.) SET FORTH IN ITEM 14, PURSUANT TO THE AUTHORITY OF FAR 43.103(B).

[ ] C. THIS SUPPLEMENTAL AGREEMENT IS ENTERED INTO PURSUANT TO AUTHORITY OF:

[ ] D. OTHER (Specify type of modification and authority)

E. IMPORTANT: Contractor [ ] is not, [ ] is required to sign this document and return _____ copies to the issuing office.

14. DESCRIPTION OF AMENDMENT/MODIFICATION (Organized by UCF section headings, including solicitation/contract subject matter where feasible.)

FY04 Installation Boundary Fencing, Ft Richardson AK -- See continuation.

Except as provided herein, all terms and conditions of the document referenced in Item 9A or 10A, as heretofore changed, remains unchanged and in full force and effect.

15A. NAME AND TITLE OF SIGNER (Type or print)		16A. NAME AND TITLE OF CONTRACTING OFFICER (Type or print) TEL: EMAIL:	
15B. CONTRACTOR/OFFEROR (Signature of person authorized to sign)	15C. DATE SIGNED	16B. UNITED STATES OF AMERICA BY (Signature of Contracting Officer)	16C. DATE SIGNED 16-Sep-2004

EXCEPTION TO SF 30
APPROVED BY OIRM 11-84

30-105-04

STANDARD FORM 30 (Rev. 10-83)
Prescribed by GSA
FAR (48 CFR) 53.243

SECTION SF 30 BLOCK 14 CONTINUATION PAGE

Continuation

A. The purposes of this amendment are as follows:

(1) To provide a revised Bid Schedule;

(2) To provide a revised Section 00700 (to add information to clause 252.236-7001);

(3) To provide a revised Section 01000;

(4) To provide a revised Section 01012;

(5) To provide a revised Section 01015;

(6) To provide a revised Section 01500; and

(7) To provide a revised Section 02821.

B. The revised attached pages supersede pages of the same number and should be inserted in numerical sequence. All changes are generally identified, for your convenience, either by strikeout for deletions, and underlining of text for additions or single dark line in the margin. All portions of the revised or new pages shall apply to this contract whether or not changes have been indicated.

C. NOTICE TO OFFERORS: Offerors must acknowledge receipt of this amendment by number and date on Standard Form 1442, BACK, Block 19, or by telegram.

D. All amendments are available for download this date on the Army Corps of Engineers website at http://www.nws.usace.army.mil/ct/.

Enclosures:
Revised Bid Schedule
Revised Section 00700
Revised Section 01000
Revised Section 01012
Revised Section 01015
Revised Section 01500
Revised Section 02821

SOLICITATION, OFFER, AND AWARD *(Construction, Alteration, or Repair)*	1. SOLICITATION NUMBER W912DW-04-R-0039	2. TYPE OF SOLICITATION ☐ SEALED BID *(IFB)* ☒ NEGOTIATED *(RFP)*	3. DATE ISSUED 19 August 2004	PAGE OF PAGES 1

IMPORTANT - The "offer" section on the reverse must be fully completed by the offeror.

4. CONTRACT NUMBER	5. REQUISITION/PURCHASE REQUEST NUMBER W68MD9-4201-7538	6. PROJECT NUMBER

7. ISSUED BY CODE W912DW
Seattle District, Corps of Engineers
ATTN: CENWS-CT-CB-MU
PO Box 3755
Seattle, WA 98124-3755

8. ADDRESS OFFER TO
Seattle District, Corps of Engineers
PO Box 3755 ATTN: CENWS-CT-CB-MU
Seattle, WA 98124-3755

HAND CARRY: Seattle District Corps of Engineers
Contracting Division
4735 East Marginal Way South
Seattle, WA 98134-2329

9. FOR INFORMATION CALL ▶	A. NAME Sherrye Schmahl	B. TELEPHONE NUMBER *(Include area code) (NO COLLECT CALLS)* 206-764-6588

SOLICITATION

NOTE: In sealed bid solicitations "offer" and "offeror" mean "bid" and "bidder".

10. THE GOVERNMENT REQUIRES PERFORMANCE OF THE WORK DESCRIBED IN THESE DOCUMENTS *(Title, identifying number, date):*

Furnish all labor, materials and equipment and perform all work for Installation Boundary Fencing, FT Richardson, Alaska. in accordance with the attached Contract Clauses, Special Clauses, Technical Specifications and Drawings.

11. The Contractor shall begin performance within 10 calendar days and complete it within * calendar days after receiving ☐ award, ☒ notice to proceed. This performance period is ☒ mandatory, ☐ negotiable. *(See* * Paragraph SC-1, 00800 *.)*

12A. THE CONTRACTOR MUST FURNISH ANY REQUIRED PERFORMANCE PAYMENT BONDS? *(If "YES," indicate within how many calendar days after award in Item 12B.)* ☒ YES ☐ NO	12B. CALENDAR DAYS 10

13. ADDITIONAL SOLICITATION REQUIREMENTS:

A. Sealed offers in original and See Section 00110 copies to perform the work required are due at the place specified in Item 8 by 2:00 p.m. *(hour)* local time 20 Sept 2004 *(date).* If this is a sealed bid solicitation, offers will be publicly opened at that time. Sealed envelope containing offers shall be marked to show the offeror's name and address, the solicitation number, and the date and time offers are due.

B. An offer guarantee ☒ is, ☐ is not required.

C. All offers are subject to the (1) work requirements, and (2) other provisions and clauses incorporated in the solicitation in full text or by reference.

D. Offers providing less than 90 calendar days for Government acceptance after the date offers are due will not be considered and will be rejected.

OFFER *(Must be fully completed by offeror)*

14. NAME AND ADDRESS OF OFFEROR *(Include ZIP Code)*	15. TELEPHONE NUMBER *(Include area code)* Fax No.:
Tax ID No: DUNS No: eMail:	16. REMITTANCE ADDRESS *(Include only if different than Item 14)*
CODE FACILITY CODE	

17. The offeror agrees to perform the work required at the prices specified below in strict accordance with the terms of this solicitation, if this offer is accepted by the Government in writing within_____ calendar days after the date offers are due. *(Insert any number equal or greater than the minimum requirement stated in 13D. Failure to insert any number means the offeror accepts the minimum in Item 13D.)*

AMOUNTS ▶ See Page 00010-5 thru 00010-11

18. The offeror agrees to furnish any required performance and payment bonds.

19. ACKNOWLEDGEMENT OF AMENDMENTS
(The offeror acknowledges receipt of amendments to the solicitation - give number and date of each)

AMENDMENT NO.										
DATE										

20A. NAME AND TITLE OF PERSON AUTHORIZED TO SIGN OFFER *(Type or print)*	20B. SIGNATURE	20C. OFFER DATE

AWARD *(To be completed by Government)*

21. ITEMS ACCEPTED

22. AMOUNT	23. ACCOUNTING AND APPROPRIATION DATA
24. SUBMIT INVOICES TO ADDRESS SHOWN IN ▶ *(4 copies unless otherwise specified)* ITEM 26	25. OTHER THAN FULL AND OPEN COMPETITION PURSUANT TO ☐ 10 U.S.C. 2304(c) ( ) ☐ 41 U.S.C. 253(c) ( )
26. ADMINISTERED BY CODE USACE - Seattle District Northwest Area Office PO Box 92146 Tillicum, WA 98492-0146	27. PAYMENT WILL BE MADE BY US Army Corps of Engineers Finance Center CEFC-AO-P 5722 Integrity Drive Millington, TN 38054-500

CONTRACTING OFFICER WILL COMPLETE ITEM 28 OR 29 AS APPLICABLE

☐ 28. NEGOTIATED AGREEMENT *(Contractor is required to sign this document and return _____ copies to the issuing office.)* Contractor agrees to furnish and deliver all items or perform all work requirements identified on this form and any continuation sheets for the consideration stated in this contract. The rights and obligations of the parties to this contract shall be governed by (a) this contract award, (b) the solicitation, and (c) the clauses, representations, certifications, and specifications incorporated by reference in or attached to this contract.

☐ 29. AWARD. *(Contractor is not required to sign this document.)* Your offer on this solicitation is hereby accepted as to the items listed. This award consummates the contract, which consists of (a) the Government solicitation and your offer, and (b) this contract award. No further contractual document is necessary.

30A. NAME AND TITLE OF CONTRACTOR OR PERSON AUTHORIZED TO SIGN *(Type or print)*		31A. NAME OF CONTRACTING OFFICER *(Type or print)* SUSAN K. SHERRELL	
30B. SIGNATURE	30C. DATE	31B. UNITED STATES OF AMERICA BY	31C. AWARD DATE

SCHEDULE

Item No.	Description of Item	Quantity	Unit	Unit Price	Amount
	BASE WORK ITEMS				
0001	Contractor Design (Design Build portion to include but not limited to design of fence foundations, geotech survey, site plat, site topography, Fence Alignment, and Perimeter Survey) (Item 0001 applies to Combination Security Fence alignment)	1	JOB	L.S.	$_____
0002	All Work to Furnish and Install Combination Security Fence (CSF) including all clearing and grubbing (See Sections 01000 SCOPE OF WORK and 02231 CLEARING AND GRUBBING) (Item 0002 applies to Combination Security Fence alignment)	2,300	L.M.	$_____	$_____
0003	All Work to Retrofit (Furnish and Install) State of Alaska Department of Transportation Moose (Netwire) Fence to become Combination Security Fence (CSF) including all clearing and grubbing and replacement of undersized line posts (See Sections 01000 SCOPE OF WORK, 02231 CLEARING AND GRUBBING, and 02220 DEMOLITION) (Item 0003 applies to Combination Security Fence alignment)	4,400	L.M.	$_____	$_____
0004	All Work to Furnish and Install Moose Gate per State of Alaska Department of Transportation as built design (See Section 02821 FENCING) (Item 0004 applies to Combination Security Fence alignment)	2	EA.	$____	$_____
0005	All Work to Furnish and Install Manually Operated CSF Double Swing Gate 7.3 Meter (Max.) Opening: (Item 0005 applies to Combination Security Fence alignment)	5	EA.	$____	$_____
0006	All Work to Furnish and Install Manually Operated CSF Double Swing Gate 4.2 Meter (Max.) Opening: (Item 0006 applies to Combination Security Fence alignment)	2	EA.	$____	$_____

Item No.	Description of Item	Quantity	Unit	Unit Price	Amount
0007	All Work to Furnish and Install Warning Signs on CSF Fencing. See Detail Drawings. (Item 0007 applies to Combination Security Fence alignment)	JOB	LS.	$____	$_____
0008	All Work to Furnish and Install Stationary Bollards (See Detail Drawings and Section 01000 SCOPE OF WORK) (Item 0008 applies to Combination Security Fence alignment)	JOB	LS.	$____	$_____
0009	DELETED				
		TOTAL BASE ITEMS			$_____
	OPTIONAL WORK ITEMS				
0010	All work to complete FE-6 Chain Link Security Fence alignment along the North side of the Fort Richardson cantonment area between the Ammunition Supply Point (ASP) and the Glenn Highway (See Drawing Plate G-4 and Section 01000 SCOPE OF WORK):				
0010AA	Contractor Design (Design Build portion to include but not limited to design of fence foundations, geotech survey, design charette, site pla~~t~~n, site topography, Fence Alignment and Perimeter Survey)	1	JOB	$____	$_____
0010AB	All Work to Furnish and Install FE-6 Chain Link Security Fence including all clearing and grubbing (See Sections 01000 SCOPE OF WORK and 02231 CLEARING AND GRUBBING)	6,600	L.M.	$____	$_____
0010AC	All Work to Furnish and Install Manually Operated Double Swing Vehicle Gate 7.3 Meter (Max.) Opening (See Detail Drawings and Section 01000 SCOPE OF WORK)	6~~8~~	EA.	$____	$_____
0010AD	All Work to Furnish and Install Gate Signs (See Detail Drawings)	JOB	LS.	$____	$_____
0010AE	All Work to Furnish and Install Warning Signs on FE-6 Chain Link Security Fence	JOB	LS.	$____	$_____
		TOTAL ITEM 0010			$_____
0011	All work to complete Pipe Rail Fence alignment along the East side of				

Item No.	Description of Item	Quantity	Unit	Unit Price	Amount
	Anchorage, East side of Far North Bicentennial Park and the North side of Stuckagain Heights. Alignment begins at the Southern terminus of the existing Pipe Rail Fence running North/South along the East side of Anchorage and terminates at the West rim of the North Fork of Campbell Creek canyon (See Drawing Plate G-4 and Section 01000 SCOPE OF WORK):				
0011AA	Contractor Design (Design Build portion to include but not limited to design of fence foundations, geotech survey, design charette, site pla~~t~~n, site topography, Fence alignment, and Perimeter Survey)	1	JOB	$____	$_____
0011AB	All Work to Furnish and Install Pipe Rail Fence including all clearing and grubbing (See Sections 01000 SCOPE OF WORK and 02231 CLEARING AND GRUBBING)	6,700	L.M.	$____	$_____
0011AC	All Work to Furnish and Install Manually Operated Steel Pipe Swing Gate 7.3 Meter (Max.) Opening (See Detail Drawings and Section 01000 SCOPE OF WORK)	7	EA.	$____	$_____
0011AD	All Work to Furnish and Install Manually Operated Steel Pipe Swing Gate 4.6 Meter (Max.) Opening (See Detail Drawings and Section 01000 SCOPE OF WORK)	1	EA.	$____	$_____
0011AE	All Work to Furnish and Install Stationary Bollards (See Detail Drawings and Section 01000 SCOPE OF WORK)	JOB	LS.	$____	$_____
0011AF	All Work to Furnish and Install Gate Signs (See Detail Drawings)	JOB	LS.	$____	$_____
0011AG	All Work to Furnish and Install Warning Signs on Pipe Rail Fence	JOB	LS.	$____	$_____
0011AH	DELETED				
			TOTAL ITEM 0011		$_____
0012	All work to complete Pipe Rail Fence alignment between the Southern end of Clunie Lake and the point where FE-6 Fence and CSF Fence begins along the				

Item No.	Description of Item	Quantity	Unit	Unit Price	Amount
	West side of Glenn Highway (See Drawing Plate G-4 and Section 01000 SCOPE OF WORK):				
0012AA	Contractor Design (Design Build portion to include but not limited to design of fence foundations, geotech survey, design charette, site pla~~t~~n, site topography, Fence Alignment, and Perimeter Survey)	1	JOB	$____	$_____
0012AB	All Work to Furnish and Install Pipe Rail Fence including all clearing and grubbing (See Sections 01000 SCOPE OF WORK and 02231 CLEARING AND GRUBBING)	11,300	L.M.	$____	$_____
0012AC	All Work to Furnish and Install Manually Operated Steel Pipe Swing Gate 7.3 Meter (Max.) Opening (See Detail Drawings and Section 01000 SCOPE OF WORK)	3	EA.	$____	$_____
0012AD	All Work to Furnish and Install Stationary Bollards (See Detail Drawings and Section 01000 SCOPE OF WORK)	JOB	LS.	$____	$_____
0012AE	All Work to Furnish and Install Gate Signs (See Detail Drawings)	JOB	LS.	$____	$_____
0012AF	All Work to Furnish and Install Warning Signs on Pipe Rail Fence	JOB	LS.	$____	$_____
0012AG	DELETED				
		TOTAL ITEM 0012			$_____
0013	All work to complete Pipe Rail Fence alignment between Knik Arm and the Northern side of Clunie Lake (See Drawing Plate G-4 and Section 01000 SCOPE OF WORK):				
0013AA	Contractor Design (Design Build portion to include but not limited to design of fence foundations, geotech survey, design charette, site pla~~t~~n, site topography, Fence Alignment, and Perimeter Survey)	1	JOB	$____	$_____
0013AB	All Work to Furnish and Install Pipe Rail Fence including all clearing and grubbing (See Sections 01000 SCOPE OF WORK and 02231 CLEARING AND GRUBBING)	8,700	L.M.	$____	$_____

Item No.	Description of Item	Quantity	Unit	Unit Price	Amount
0013AC	All Work to Furnish and Install Manually Operated Steel Pipe Swing Gate 4.6 Meter (Max) Opening. See Detail Drawings and Section 01000 SCOPE OF WORK.	1	EA.	$____	$_____
0013AD	All Work to Furnish and Install Manually Operated Steel Pipe Swing Gate 3.1 Meter (Max) Opening. See Detail Drawings and Section 01000 SCOPE OF WORK	1	EA.	$____	$_____
0013AE	All Work to Furnish and Install Stationary Bollards (See Detail Drawings and Section 01000 SCOPE OF WORK)	JOB	LS.	$____	$_____
0013AF	All Work to Furnish and Install Gate Signs (See Detail Drawings)	JOB	LS.	$____	$_____

Item No.	Description of Item	Quantity	Unit	Unit Price	Amount
0013AG	All Work to Furnish and Install Warning Signs on Pipe Rail Fence	JOB	LS.	$____	$_____
		TOTAL ITEM 0013			$_____
0014	All work to complete Pipe Rail Fence alignment along the East side of Glenn Highway between the Northern terminus of existing Pipe Rail Fence running North/South along the East side of Anchorage to the termination point to the East of the Anchorage Regional Lanfill. All work to also complete Pipe Rail Fence alignment along the Eastern Fort Richardson boundary to the East of the Anchorage Regional Landfill and the Glenn Highway (See Drawing Plate G-4 and Section 01000 SCOPE OF WORK):				
0014AA	Contractor Design (Design Build portion to include but not limited to design of fence foundations, geotech survey, design charette, site pla~~t~~n, site topography, Fence Alignment, and Perimeter Survey)	1	JOB	$____	$_____
0014AB	All Work to Fuurnish and Install Pipe Rail Fence including all clearing and grubbing (See Sections 01000 SCOPE OF WORK and 02231 CLEARING AND GRUBBING)	13,300	L.M.	$____	$_____
0014AC	All Work to Furnish and Install Manually Operated Steel Pipe Swing Gate 7.3 Meter (Max.) Opening (See Detail Drawings and Section 01000 SCOPE OF WORK)	5	EA.	$____	$_____
0014AD	All Work to Furnish and Install Stationary Bollards (See Detail Drawings and Section 01000 SCOPE OF WORK)	JOB	LS.	$____	$_____
0014AE	All Work to Furnish and Install Gate Signs (See Detail Drawings)	JOB	LS.	$____	$_____
0014AF	All Work to Furnish and Install Warning Signs on Pipe Rail Fence	JOB	LS.	$____	$_____
0014AG	DELETED		.		
		TOTAL ITEM 0014			$_____
0015	All Work to Furnish and Install Boundary Monuments (See Section 01000	5	EA.	$____	$_____

Item No.	Description of Item	Quantity	Unit	Unit Price	Amount
	SCOPE OF WORK)				

Item No.	Description of Item	Quantity	Unit	Unit Price	Amount
0016	All Work to Furnish and Install Additional Boundary Monuments (See Section 01000 SCOPE OF WORK)	5	EA.	$____	$_____
				TOTAL OPTIONAL ITEMS	$_____
				TOTAL BASE AND OPTIONAL ITEMS	$_____

NOTE:

1. Bids shall not be submitted for quantities less than those specified for each line item. Bidders shall bid on all line items of the Schedule. Failure to include pricing for all quantities of all line items will result in rejection of the bid as non-responsive.

2. Optional Bid Items 0010 through 0014 include sub-items shown. They will be awarded or not, based on the amounts shown on the line “Total Item _____”.

52.201-4001	Successor Contracting Officers	DEC 1999
52.202-1 Alt I	Definitions (Jun 2004) --Alternate I	MAY 2001
52.203-3	Gratuities	APR 1984
52.203-5	Covenant Against Contingent Fees	APR 1984
52.203-6	Restrictions On Subcontractor Sales To The Government	JUL 1995
52.203-7	Anti-Kickback Procedures	JUL 1995
52.203-8	Cancellation, Rescission, and Recovery of Funds for Illegal or Improper Activity	JAN 1997
52.203-10	Price Or Fee Adjustment For Illegal Or Improper Activity	JAN 1997
52.203-12	Limitation On Payments To Influence Certain Federal Transactions	JUN 2003
52.204-4	Printed or Copied Double-Sided on Recycled Paper	AUG 2000
52.204-7	Central Contractor Registration	OCT 2003
52.209-6	Protecting the Government's Interest When Subcontracting With Contractors Debarred, Suspended, or Proposed for Debarment	JUL 1995
52.211-10	Commencement, Prosecution, and Completion of Work	APR 1984
52.211-12	Liquidated Damages—Construction	SEP2000
52.211-13	Time Extensions	SEP 2000
52.212-4007	Environmental Litigation	NOV 1999
52.215-2	Audit and Records--Negotiation	JUN 1999
52.215-8	Order of Precedence--Uniform Contract Format	OCT 1997
52.215-11	Price Reduction for Defective Cost or Pricing Data--Modifications	OCT 1997
52.215-13	Subcontractor Cost or Pricing Data--Modifications	OCT 1997
52.215-19	Notification of Ownership Changes	OCT 1997
52.215-21	Requirements for Cost or Pricing Data or Information Other Than Cost or Pricing Data--Modifications	OCT 1997
52.217-9	Option To Extend The Term Of The Contract	MAR 2000
52.219-8	Utilization of Small Business Concerns	MAY 2004
52.219-14	Limitations On Subcontracting	DEC 1996
52.222-1	Notice To The Government Of Labor Disputes	FEB 1997
52.222-3	Convict Labor	JUN 2003
52.222-4	Contract Work Hours and Safety Standards Act - Overtime Compensation	SEP 2000
52.222-6	Davis Bacon Act	FEB 1995
52.222-7	Withholding of Funds	FEB 1988
52.222-8	Payrolls and Basic Records	FEB 1988
52.222-9	Apprentices and Trainees	FEB 1988
52.222-10	Compliance with Copeland Act Requirements	FEB 1988
52.222-11	Subcontracts (Labor Standards)	FEB 1988
52.222-12	Contract Termination-Debarment	FEB 1988
52.222-13	Compliance with Davis-Bacon and Related Act Regulations.	FEB 1988
52.222-14	Disputes Concerning Labor Standards	FEB 1988
52.222-15	Certification of Eligibility	FEB 1988
52.222-21	Prohibition Of Segregated Facilities	FEB 1999
52.222-23	Notice of Requirement for Affirmative Action to Ensure Equal Employment Opportunity for Construction	FEB 1999

52.222-26	Equal Opportunity	APR 2002
52.222-27	Affirmative Action Compliance Requirements for Construction	FEB 1999
52.222-35	Equal Opportunity For Special Disabled Veterans, Veterans of the Vietnam Era, and Other Eligible Veterans	DEC 2001
52.222-36	Affirmative Action For Workers With Disabilities	JUN 1998
52.222-37	Employment Reports On Special Disabled Veterans, Veterans Of The Vietnam Era, and Other Eligible Veterans	DEC 2001
52.223-3	Hazardous Material Identification And Material Safety Data	JAN 1997
52.223-5	Pollution Prevention and Right-to-Know Information	AUG 2003
52.223-6	Drug-Free Workplace	MAY 2001
52.223-9	Estimate of Percentage of Recovered Material Content for EPA-Designated Products	AUG 2000
52.223-14	Toxic Chemical Release Reporting	AUG 2003
52.224-1	Privacy Act Notification	APR 1984
52.224-2	Privacy Act	APR 1984
52.225-9	Buy American Act--Construction Materials	JUN 2003
52.225-10	Notice of Buy American Act Requirement--Construction Materials	MAY 2002
52.225-13	Restrictions on Certain Foreign Purchases	DEC 2003
52.227-1	Authorization and Consent	JUL 1995
52.227-4	Patent Indemnity-Construction Contracts	APR 1984
52.228-2	Additional Bond Security	OCT 1997
52.228-5`	Insurance—Work on a Government Installation	JAN 1997
52.228-11	Pledges Of Assets	FEB 1992
52.228-12	Prospective Subcontractor Requests for Bonds	OCT 1995
52.228-14	Irrevocable Letter of Credit	DEC 1999
52.228-15	Performance and Payment Bonds--Construction	JUL 2000
52.228-4001	Information Regarding Performance and Payment Bonds (FAR 28.102)	FEB 2001
52.229-3	Federal, State And Local Taxes	APR 2003
52.230-3	Disclosure and Consistency of Cost Accounting Practices	APR 1998
52.231-5000	Equipment Ownership and Operating Expense Schedule	MAR 1995
52.232-5	Payments under Fixed-Price Construction Contracts	SEP 2002
52.232-16	Progress Payments	APR 2003
52.232-17	Interest	JUN 1996
52.232-23	Assignment Of Claims	JAN 1986
52.232-27	Prompt Payment for Construction Contracts	OCT 2003
52.232-33	Payment by Electronic Funds Transfer--Central Contractor Registration	OCT 2003
52.232-5000	Payment for Materials Delivered Off-Site	MAR 1995
52.233-1	Disputes	JUL 2002
52.233-3	Protest After Award	AUG 1996
52.236-1	Performance of Work by the Contractor	APR 1984
52.236-2	Differing Site Conditions	APR 1984
52.236-3	Site Investigation and Conditions Affecting the Work	APR 1984
52.236-5	Material and Workmanship	APR 1984
52.236-6	Superintendence by the Contractor	APR 1984
52.236-7	Permits and Responsibilities	NOV 1991
52.236-8	Other Contracts	APR 1984
52.236-9	Protection of Existing Vegetation, Structures, Equipment, Utilities, and Improvements	APR 1984
52.236-10	Operations and Storage Areas	APR 1984
52.236-11	Use and Possession Prior to Completion	APR 1984

52.236-12	Cleaning Up	APR 1984
52.236-13	Accident Prevention	NOV 1991
52.236-14	Availability and Use of Utility Services	APR 1984
52.236-15	Schedules for Construction Contracts	APR 1984
52.236-17	Layout of Work	APR 1984
52.236-21	Specifications and Drawings for Construction	FEB 1997
52.236-22	Design within Funding Limitations	APR 1984
52.236-23	Responsibility of the Architect-Engineer Contractor	APR 1984
52.236-26	Preconstruction Conference	FEB 1995
52.242-13	Bankruptcy	JUL 1995
52.242-14	Suspension of Work	APR 1984
52.243-4	Changes	AUG 1987
52.244-5	Competition in Subcontracting	DEC 1996
52.244-6	Subcontracts for Commercial Items	JUL 2004
52.246-12	Inspection of Construction	AUG 1996
52.248-3	Value Engineering-Construction	FEB 2000
52.249-2 Alt I	Termination for Convenience of the Government (Fixed-Price) (May 2004) - Alternate I	SEP 1996
52.249-10	Default (Fixed-Price Construction)	APR 1984
52.252-4	Alterations in Contract	APR 1984
52.253-1	Computer Generated Forms	JAN 1991
252.201-7000	Contracting Officer's Representative	DEC 1991
252.203-7001	Prohibition On Persons Convicted of Fraud or Other Defense-Contract-Related Felonies	MAR 1999
252.203-7002	Display Of DOD Hotline Poster	DEC 1991
252.204-7000	Disclosure Of Information	DEC 1991
252.204-7003	Control Of Government Personnel Work Product	APR 1992
252.204-7004 Alt A	Required Central Contractor Registration Alternate A	NOV 2003
252.205-7000	Provision Of Information To Cooperative Agreement Holders	DEC 1991
252.209-7004	Subcontracting With Firms That Are Owned or Controlled By The Government of a Terrorist Country	MAR 1998
252.215-7000	Pricing Adjustments	DEC 1991
252.219-7003	Small, Small Disadvantaged and Women-Owned Small Business Subcontracting Plan (DOD Contracts)	APR 1996
252.219-7009	Section 8(a) Direct Award	MAR 2002
252.219-7010	Alternate A	JUN 1998
252.222-7000	Restrictions on Employment of Personnel	MAR 2000
252.223-7004	Drug Free Work Force	SEP 1988
252.223-7006	Prohibition On Storage And Disposal Of Toxic And Hazardous Materials	APR 1993
252.225-7031	Secondary Arab Boycott Of Israel	APR 2003
252.226-7001	Utilization of Indian Organizations and Indian-Owned Economic Enterprises, and Native Hawaiian Small Business Concerns	OCT 2003
252.227-7022	Government Rights (Unlimited)	MAR 1979
252.227-7023	Drawings and Other Data to become Property of Government	MAR 1979
252.227-7033	Rights in Shop Drawings	APR 1966
252.231-7000	Supplemental Cost Principles	DEC 1991
252.236-7000	Modification Proposals -Price Breakdown	DEC 1991
252.236-7001	Contract Drawings, Maps, and Specifications	AUG 2000
252.242-7000	Postaward Conference	DEC 1991
252.243-7001	Pricing Of Contract Modifications	DEC 1991
252.243-7002	Requests for Equitable Adjustment	MAR 1998

252.244-7000	Subcontracts for Commercial Items and Commercial Components (DoD Contracts)	MAR 2000
252.247-7023	Transportation of Supplies by Sea	MAY 2002
252.247-7024	Notification Of Transportation Of Supplies By Sea	MAR 2000
PIL 2003-06	Security Contract Language for all Corps of Engineers' Unclassified Contracts	FEB 2003

CLAUSES INCORPORATED BY FULL TEXT

Successor Contracting Officers (52.201-4001)

The Contracting Officer who signed this contract is the primary Contracting Officer for the contract. Neverthless, any Contracting Officer assigned to the Seattle District and acting within his/her authority may take formal action on this contract when a contract action needs to be taken and the primary Contracting Officer is unavailable.

52.202-1 DEFINITIONS (JUN 2004) --ALTERNATE I (MAR 2001)

(a) Agency head or head of the agency means the Secretary (Attorney General, Administrator, Governor, Chairperson, or other chief official, as appropriate) of the agency, unless otherwise indicated, including any deputy or assistant chief official of the executive agency.

(b) Commercial component means any component that is a commercial item.

(c) Component means any item supplied to the Government as part of an end item or of another component, except that for use in 52.225-9, and 52.225-11 see the definitions in 52.225-9(a) and 52.225-11(a).

(d) Contracting Officer means a person with the authority to enter into, administer, and/or terminate contracts and make related determinations and findings. The term includes certain authorized representatives of the Contracting Officer acting within the limits of their authority as delegated by the Contracting Officer.

(e) Nondevelopmental item means--

(1) Any previously developed item of supply used exclusively for governmental purposes by a Federal agency, a State or local government, or a foreign government with which the United States has a mutual defense cooperation agreement;

(2) Any item described in paragraph (f)(1) of this definition that requires only minor modification or modifications of a type customarily available in the commercial marketplace in order to meet the requirements of the procuring department or agency; or

(3) Any item of supply being produced that does not meet the requirements of paragraph (f)(1) or (f)(2) solely because the item is not yet in use.

(f) "Contracting Officer" means a person with the authority to enter into, administer, and/or terminate contracts and make related determinations and findings. The term includes certain authorized representatives of the Contracting Officer acting within the limits of their authority as delegated by the Contracting Officer.

(g) Except as otherwise provided in this contract, the term "subcontracts" includes, but is not limited to, purchase orders and changes and modifications to purchase orders under this contract.

(End of clause)

52.203-3 GRATUITIES (APR 1984)

(a) The right of the Contractor to proceed may be terminated by written notice if, after notice and hearing, the agency head or a designee determines that the Contractor, its agent, or another representative--

(1) Offered or gave a gratuity (e.g., an entertainment or gift) to an officer, official, or employee of the Government; and

(2) Intended, by the gratuity, to obtain a contract or favorable treatment under a contract.

(b) The facts supporting this determination may be reviewed by any court having lawful jurisdiction.

(c) If this contract is terminated under paragraph (a) of this clause, the Government is entitled--

(1) To pursue the same remedies as in a breach of the contract; and

(2) In addition to any other damages provided by law, to exemplary damages of not less than 3 nor more than 10 times the cost incurred by the Contractor in giving gratuities to the person concerned, as determined by the agency head or a designee. (This subparagraph (c)(2) is applicable only if this contract uses money appropriated to the Department of Defense.)

(d) The rights and remedies of the Government provided in this clause shall not be exclusive and are in addition to any other rights and remedies provided by law or under this contract.

(End of clause)

52.203-5 COVENANT AGAINST CONTINGENT FEES (APR 1984)

(a) The Contractor warrants that no person or agency has been employed or retained to solicit or obtain this contract upon an agreement or understanding for a contingent fee, except a bona fide employee or agency. For breach or violation of this warranty, the Government shall have the right to annul this contract without liability or, in its discretion, to deduct from the contract price or consideration, or otherwise recover, the full amount of the contingent fee.

(b) "Bona fide agency," as used in this clause, means an established commercial or selling agency, maintained by a contractor for the purpose of securing business, that neither exerts nor proposes to exert improper influence to solicit or obtain Government contracts nor holds itself out as being able to obtain any Government contract or contracts through improper influence.

"Bona fide employee," as used in this clause, means a person, employed by a contractor and subject to the contractor's supervision and control as to time, place, and manner of performance, who neither exerts nor proposes to exert improper influence to solicit or obtain Government contracts nor holds out as being able to obtain any Government contract or contracts through improper influence.

"Contingent fee," as used in this clause, means any commission, percentage, brokerage, or other fee that is contingent upon the success that a person or concern has in securing a Government contract.

"Improper influence," as used in this clause, means any influence that induces or tends to induce a Government employee or officer to give consideration or to act regarding a Government contract on any basis other than the merits of the matter.

(End of clause)

52.203-6 RESTRICTIONS ON SUBCONTRACTOR SALES TO THE GOVERNMENT (JUL 1995)

(a) Except as provided in (b) of this clause, the Contractor shall not enter into any agreement with an actual or prospective subcontractor, nor otherwise act in any manner, which has or may have the effect of restricting sales by such subcontractors directly to the Government of any item or process (including computer software) made or furnished by the subcontractor under this contract or under any follow-on production contract.

(b) The prohibition in (a) of this clause does not preclude the Contractor from asserting rights that are otherwise authorized by law or regulation.

(c) The Contractor agrees to incorporate the substance of this clause, including this paragraph (c), in all subcontracts under this contract which exceed $100,000.

52.203-7 ANTI-KICKBACK PROCEDURES. (JUL 1995)

(a) Definitions.

"Kickback," as used in this clause, means any money, fee, commission, credit, gift, gratuity, thing of value, or compensation of any kind which is provided, directly or indirectly, to any prime Contractor, prime Contractor employee, subcontractor, or subcontractor employee for the purpose of improperly obtaining or rewarding favorable treatment in connection with a prime contract or in connection with a subcontract relating to a prime contract.

"Person," as used in this clause, means a corporation, partnership, business association of any kind, trust, joint-stock company, or individual.

"Prime contract," as used in this clause, means a contract or contractual action entered into by the United States for the purpose of obtaining supplies, materials, equipment, or services of any kind.

"Prime Contractor," as used in this clause, means a person who has entered into a prime contract with the United States.

"Prime Contractor employee," as used in this clause, means any officer, partner, employee, or agent of a prime Contractor.

"Subcontract," as used in this clause, means a contract or contractual action entered into by a prime Contractor or subcontractor for the purpose of obtaining supplies, materials, equipment, or services of any kind under a prime contract.

"Subcontractor," as used in this clause, (1) means any person, other than the prime Contractor, who offers to furnish or furnishes any supplies, materials, equipment, or services of any kind under a prime contract or a subcontract entered into in connection with such prime contract, and (2) includes any person who offers to furnish or furnishes general supplies to the prime Contractor or a higher tier subcontractor.

"Subcontractor employee," as used in this clause, means any officer, partner, employee, or agent of a subcontractor.

(b) The Anti-Kickback Act of 1986 (41 U.S.C. 51-58) (the Act), prohibits any person from -

(1) Providing or attempting to provide or offering to provide any kickback;

(2) Soliciting, accepting, or attempting to accept any kickback; or

(3) Including, directly or indirectly, the amount of any kickback in the contract price charged by a prime Contractor to the United States or in the contract price charged by a subcontractor to a prime Contractor or higher tier subcontractor.

(c)(1) The Contractor shall have in place and follow reasonable procedures designed to prevent and detect possible violations described in paragraph (b) of this clause in its own operations and direct business relationships.

(2) When the Contractor has reasonable grounds to believe that a violation described in paragraph (b) of this clause may have occurred, the Contractor shall promptly report in writing the possible violation. Such reports shall be made to the inspector general of the contracting agency, the head of the contracting agency if the agency does not have an inspector general, or the Department of Justice.

(3) The Contractor shall cooperate fully with any Federal agency investigating a possible violation described in paragraph (b) of this clause.

(4) The Contracting Officer may (i) offset the amount of the kickback against any monies owed by the United States under the prime contract and/or (ii) direct that the Prime Contractor withhold, from sums owed a subcontractor under the prime contract, the amount of any kickback. The Contracting Officer may order the monies withheld under subdivision (c)(4)(ii) of this clause be paid over to the Government unless the Government has already offset those monies under subdivision (c)(4)(i) of this clause. In either case, the Prime Contractor shall notify the Contracting Officer when the monies are withheld.

(5) The Contractor agrees to incorporate the substance of this clause, including this subparagraph (c)(5) but excepting subparagraph (c)(1), in all subcontracts under this contract which exceed $100,000.

52.203-8 CANCELLATION, RESCISSION, AND RECOVERY OF FUNDS FOR ILLEGAL OR IMPROPER ACTIVITY (JAN 1997)

(a) If the Government receives information that a contractor or a person has engaged in conduct constituting a violation of subsection (a), (b), (c), or (d) of Section 27 of the Office of Federal Procurement Policy Act (41 U.S.C. 423) (the Act), as amended by section 4304 of the 1996 National Defense Authorization Act for Fiscal Year 1996 (Pub. L. 104-106), the Government may--

(1) Cancel the solicitation, if the contract has not yet been awarded or issued; or

(2) Rescind the contract with respect to which--

(i) The Contractor or someone acting for the Contractor has been convicted for an offense where the conduct constitutes a violation of subsection 27(a) or (b) of the Act for the purpose of either--

(A) Exchanging the information covered by such subsections for anything of value; or

(B) Obtaining or giving anyone a competitive advantage in the award of a Federal agency procurement contract; or

(ii) The head of the contracting activity has determined, based upon a preponderance of the evidence, that the Contractor or someone acting for the Contractor has engaged in conduct constituting an offense punishable under subsections 27(e)(1) of the Act.

(b) If the Government rescinds the contract under paragraph (a) of this clause, the Government is entitled to recover, in addition to any penalty prescribed by law, the amount expended under the contract.

(c) The rights and remedies of the Government specified herein are not exclusive, and are in addition to any other rights and remedies provided by law, regulation, or under this contract.

(End of clause)

52.203-10 PRICE OR FEE ADJUSTMENT FOR ILLEGAL OR IMPROPER ACTIVITY (JAN 1997)

(a) The Government, at its election, may reduce the price of a fixed-price type contract and the total cost and fee under a cost-type contract by the amount of profit or fee determined as set forth in paragraph (b) of this clause if the head of the contracting activity or designee determines that there was a violation of subsection 27 (a), (b), or (c) of the Office of Federal Procurement Policy Act, as amended (41 U.S.C. 423), as implemented in section 3.104 of the Federal Acquisition Regulation.

(b) The price or fee reduction referred to in paragraph (a) of this clause shall be--

(1) For cost-plus-fixed-fee contracts, the amount of the fee specified in the contract at the time of award;

(2) For cost-plus-incentive-fee contracts, the target fee specified in the contract at the time of award, notwithstanding any minimum fee or "fee floor" specified in the contract;

(3) For cost-plus-award-fee contracts--

(i) The base fee established in the contract at the time of contract award;

(ii) If no base fee is specified in the contract, 30 percent of the amount of each award fee otherwise payable to the Contractor for each award fee evaluation period or at each award fee determination point.

(4) For fixed-price-incentive contracts, the Government may--

(i) Reduce the contract target price and contract target profit both by an amount equal to the initial target profit specified in the contract at the time of contract award; or

(ii) If an immediate adjustment to the contract target price and contract target profit would have a significant adverse impact on the incentive price revision relationship under the contract, or adversely affect the contract financing provisions, the Contracting Officer may defer such adjustment until establishment of the total final price of the contract. The total final price established in accordance with the incentive price revision provisions of the contract shall be reduced by an amount equal to the initial target profit specified in the contract at the time of contract award and such reduced price shall be the total final contract price.

(5) For firm-fixed-price contracts, by 10 percent of the initial contract price or a profit amount determined by the

Contracting Officer from records or documents in existence prior to the date of the contract award.

(c) The Government may, at its election, reduce a prime contractor's price or fee in accordance with the procedures of paragraph (b) of this clause for violations of the Act by its subcontractors by an amount not to exceed the amount of profit or fee reflected in the subcontract at the time the subcontract was first definitively priced.

(d) In addition to the remedies in paragraphs (a) and (c) of this clause, the Government may terminate this contract for default. The rights and remedies of the Government specified herein are not exclusive, and are in addition to any other rights and remedies provided by law or under this contract.

(End of clause)

52.203-12 LIMITATION ON PAYMENTS TO INFLUENCE CERTAIN FEDERAL TRANSACTIONS (JUN 2003)

(a) Definitions.

"Agency," as used in this clause, means executive agency as defined in 2.101.

"Covered Federal action," as used in this clause, means any of the following Federal actions:

(1) The awarding of any Federal contract.

(2) The making of any Federal grant.

(3) The making of any Federal loan.

(4) The entering into of any cooperative agreement.

(5) The extension, continuation, renewal, amendment, or modification of any Federal contract, grant, loan, or cooperative agreement.

"Indian tribe" and "tribal organization," as used in this clause, have the meaning provided in section 4 of the Indian Self-Determination and Education Assistance Act (25 U.S.C. 450B) and include Alaskan Natives.

"Influencing or attempting to influence," as used in this clause, means making, with the intent to influence, any communication to or appearance before an officer or employee of any agency, a Member of Congress, an officer or employee of Congress, or an employee of a Member of Congress in connection with any covered Federal action.

"Local government," as used in this clause, means a unit of government in a State and, if chartered, established, or otherwise recognized by a State for the performance of a governmental duty, including a local public authority, a special district, an intrastate district, a council of governments, a sponsor group representative organization, and any other instrumentality of a local government.

"Officer or employee of an agency," as used in this clause, includes the following individuals who are employed by an agency:

(1) An individual who is appointed to a position in the Government under Title 5, United States Code, including a position under a temporary appointment.

(2) A member of the uniformed services, as defined in subsection 101(3),Title 37, United States Code.

(3) A special Government employee, as defined in section 202, Title 18, United States Code.

(4) An individual who is a member of a Federal advisory committee, as defined by the Federal Advisory Committee Act, Title 5, United States Code, appendix 2.

"Person," as used in this clause, means an individual, corporation, company, association, authority, firm, partnership, society, State, and local government, regardless of whether such entity is operated for profit, or not for profit. This term excludes an Indian tribe, tribal organization, or any other Indian organization with respect to expenditures specifically permitted by other Federal law.

"Reasonable compensation," as used in this clause, means, with respect to a regularly employed officer or employee of any person, compensation that is consistent with the normal compensation for such officer or employee for work that is not furnished to, not funded by, or not furnished in cooperation with the Federal Government.

"Reasonable payment," as used in this clause, means, with respect to professional and other technical services, a payment in an amount that is consistent with the amount normally paid for such services in the private sector.

"Recipient," as used in this clause, includes the Contractor and all subcontractors. This term excludes an Indian tribe, tribal organization, or any other Indian organization with respect to expenditures specifically permitted by other Federal law.

"Regularly employed," as used in this clause, means, with respect to an officer or employee of a person requesting or receiving a Federal contract, an officer or employee who is employed by such person for at least 130 working days within 1 year immediately preceding the date of the submission that initiates agency consideration of such person for receipt of such contract. An officer or employee who is employed by such person for less than 130 working days within 1 year immediately preceding the date of the submission that initiates agency consideration of such person shall be considered to be regularly employed as soon as he or she is employed by such person for 130 working days.

State, as used in this clause, means a State of the United States, the District of Columbia, or an outlying area of the United States, an agency or instrumentality of a State, and multi-State, regional, or interstate entity having governmental duties and powers.

(b) Prohibitions.

(1) Section 1352 of Title 31, United States Code, among other things, prohibits a recipient of a Federal contract, grant, loan, or cooperative agreement from using appropriated funds to pay any person for influencing or attempting to influence an officer or employee of any agency, a Member of Congress, an officer or employee of Congress, or an employee of a Member of Congress in connection with any of the following covered Federal actions: the awarding of any Federal contract; the making of any Federal grant; the making of any Federal loan; the entering into of any cooperative agreement; or the modification of any Federal contract, grant, loan, or cooperative agreement.

(2) The Act also requires Contractors to furnish a disclosure if any funds other than Federal appropriated funds (including profit or fee received under a covered Federal transaction) have been paid, or will be paid, to any person for influencing or attempting to influence an officer or employee of any agency, a Member of Congress, an officer or employee of Congress, or an employee of a Member of Congress in connection with a Federal contract, grant, loan, or cooperative agreement.

(3) The prohibitions of the Act do not apply under the following conditions:

(i) Agency and legislative liaison by own employees.

(A) The prohibition on the use of appropriated funds, in subparagraph (b)(1) of this clause, does not apply in the case of a payment of reasonable compensation made to an officer or employee of a person requesting or receiving a

covered Federal action if the payment is for agency and legislative liaison activities not directly related to a covered Federal action.

(B) For purposes of subdivision (b)(3)(i)(A) of this clause, providing any information specifically requested by an agency or Congress is permitted at any time.

(C) The following agency and legislative liaison activities are permitted at any time where they are not related to a specific solicitation for any covered Federal action:

(1) Discussing with an agency the qualities and characteristics (including individual demonstrations) of the person's products or services, conditions or terms of sale, and service capabilities.

(2) Technical discussions and other activities regarding the application or adaptation of the person's products or services for an agency's use.

(D) The following agency and legislative liaison activities are permitted where they are prior to formal solicitation of any covered Federal action--

(1) Providing any information not specifically requested but necessary for an agency to make an informed decision about initiation of a covered Federal action;

(2) Technical discussions regarding the preparation of an unsolicited proposal prior to its official submission; and

(3) Capability presentations by persons seeking awards from an agency pursuant to the provisions of the Small Business Act, as amended by Pub. L. 95-507, and subsequent amendments.

(E) Only those services expressly authorized by subdivision (b)(3)(i)(A) of this clause are permitted under this clause.

(ii) Professional and technical services.

(A) The prohibition on the use of appropriated funds, in subparagraph (b)(1) of this clause, does not apply in the case of--

(1) A payment of reasonable compensation made to an officer or employee of a person requesting or receiving a covered Federal action or an extension, continuation, renewal, amendment, or modification of a covered Federal action, if payment is for professional or technical services rendered directly in the preparation, submission, or negotiation of any bid, proposal, or application for that Federal action or for meeting requirements imposed by or pursuant to law as a condition for receiving that Federal action.

(2) Any reasonable payment to a person, other than an officer or employee of a person requesting or receiving a covered Federal action or an extension, continuation, renewal, amendment, or modification of a covered Federal action if the payment is for professional or technical services rendered directly in the preparation, submission, or negotiation of any bid, proposal, or application for that Federal action or for meeting requirements imposed by or pursuant to law as a condition for receiving that Federal action. Persons other than officers or employees of a person requesting or receiving a covered Federal action include consultants and trade associations.

(B) For purposes of subdivision (b)(3)(ii)(A) of this clause, "professional and technical services" shall be limited to advice and analysis directly applying any professional or technical discipline. For example, drafting of a legal document accompanying a bid or proposal by a lawyer is allowable. Similarly, technical advice provided by an engineer on the performance or operational capability of a piece of equipment rendered directly in the negotiation of a contract is allowable. However, communications with the intent to influence made by a professional (such as a licensed lawyer) or a technical person (such as a licensed accountant) are not allowable under this section unless they provide advice and analysis directly applying their professional or technical expertise and unless the advice or

analysis is rendered directly and solely in the preparation, submission or negotiation of a covered Federal action. Thus, for example, communications with the intent to influence made by a lawyer that do not provide legal advice or analysis directly and solely related to the legal aspects of his or her client's proposal, but generally advocate one proposal over another are not allowable under this section because the lawyer is not providing professional legal services. Similarly, communications with the intent to influence made by an engineer providing an engineering analysis prior to the preparation or submission of a bid or proposal are not allowable under this section since the engineer is providing technical services but not directly in the preparation, submission or negotiation of a covered Federal action.

(C) Requirements imposed by or pursuant to law as a condition for receiving a covered Federal award include those required by law or regulation and any other requirements in the actual award documents.

(D) Only those services expressly authorized by subdivisions (b)(3)(ii)(A)(1) and (2) of this clause are permitted under this clause.

(E) The reporting requirements of FAR 3.803(a) shall not apply with respect to payments of reasonable compensation made to regularly employed officers or employees of a person.

(c) Disclosure.

(1) The Contractor who requests or receives from an agency a Federal contract shall file with that agency a disclosure form, OMB standard form LLL, Disclosure of Lobbying Activities, if such person has made or has agreed to make any payment using nonappropriated funds (to include profits from any covered Federal action), which would be prohibited under subparagraph (b)(1) of this clause, if paid for with appropriated funds.

(2) The Contractor shall file a disclosure form at the end of each calendar quarter in which there occurs any event that materially affects the accuracy of the information contained in any disclosure form previously filed by such person under subparagraph (c)(1) of this clause. An event that materially affects the accuracy of the information reported includes--

(i) A cumulative increase of $25,000 or more in the amount paid or expected to be paid for influencing or attempting to influence a covered Federal action; or

(ii) A change in the person(s) or individual(s) influencing or attempting to influence a covered Federal action; or

(iii) A change in the officer(s), employee(s), or Member(s) contacted to influence or attempt to influence a covered Federal action.

(3) The Contractor shall require the submittal of a certification, and if required, a disclosure form by any person who requests or receives any subcontract exceeding $100,000 under the Federal contract.

(4) All subcontractor disclosure forms (but not certifications) shall be forwarded from tier to tier until received by the prime Contractor. The prime Contractor shall submit all disclosures to the Contracting Officer at the end of the calendar quarter in which the disclosure form is submitted by the subcontractor. Each subcontractor certification shall be retained in the subcontract file of the awarding Contractor.

(d) Agreement. The Contractor agrees not to make any payment prohibited by this clause.

(e) Penalties.

(1) Any person who makes an expenditure prohibited under paragraph (a) of this clause or who fails to file or amend the disclosure form to be filed or amended by paragraph (b) of this clause shall be subject to civil penalties as

provided for by 31 U.S.C. 1352. An imposition of a civil penalty does not prevent the Government from seeking any other remedy that may be applicable.

(2) Contractors may rely without liability on the representation made by their subcontractors in the certification and disclosure form.

(f) Cost allowability. Nothing in this clause makes allowable or reasonable any costs which would otherwise be unallowable or unreasonable. Conversely, costs made specifically unallowable by the requirements in this clause will not be made allowable under any other provision.

(End of clause)

52.204-4 PRINTED OR COPIED DOUBLE-SIDED ON RECYCLED PAPER (AUG 2000)

(a) Definitions. As used in this clause--

“Postconsumer material” means a material or finished product that has served its intended use and has been discarded for disposal or recovery, having completed its life as a consumer item. Postconsumer material is a part of the broader category of “recovered material.” For paper and paper products, postconsumer material means “postconsumer fiber” defined by the U.S. Environmental Protection Agency (EPA) as--

(1) Paper, paperboard, and fibrous materials from retail stores, office buildings, homes, and so forth, after they have passed through their end-usage as a consumer item, including: used corrugated boxes; old newspapers; old magazines; mixed waste paper; tabulating cards; and used cordage; or

(2) All paper, paperboard, and fibrous materials that enter and are collected from municipal solid waste; but not

(3) Fiber derived from printers' over-runs, converters' scrap, and over-issue publications.

“Printed or copied double-sided” means printing or reproducing a document so that information is on both sides of a sheet of paper.

“Recovered material,” for paper and paper products, is defined by EPA in its Comprehensive Procurement Guideline as “recovered fiber” and means the following materials:

(1) Postconsumer fiber; and

(2) Manufacturing wastes such as--

(i) Dry paper and paperboard waste generated after completion of the papermaking process (that is, those manufacturing operations up to and including the cutting and trimming of the paper machine reel into smaller rolls or rough sheets) including: envelope cuttings, bindery trimmings, and other paper and paperboard waste resulting from printing, cutting, forming, and other converting operations; bag, box, and carton manufacturing wastes; and butt rolls, mill wrappers, and rejected unused stock; and

(ii) Repulped finished paper and paperboard from obsolete inventories of paper and paperboard manufacturers, merchants, wholesalers, dealers, printers, converters, or others.

(b) In accordance with Section 101 of Executive Order 13101 of September 14, 1998, Greening the Government through Waste Prevention, Recycling, and Federal Acquisition, the Contractor is encouraged to submit paper documents, such as offers, letters, or reports, that are printed or copied double-sided on recycled paper that meet minimum

content standards specified in Section 505 of Executive Order 13101, when not using electronic commerce methods to submit information or data to the Government.

(c) If the Contractor cannot purchase high-speed copier paper, offset paper, forms bond, computer printout paper, carbonless paper, file folders, white wove envelopes, writing and office paper, book paper, cotton fiber paper, and cover stock meeting the 30 percent postconsumer material standard for use in submitting paper documents to the Government, it should use paper containing no less than 20 percent postconsumer material. This lesser standard should be used only when paper meeting the 30 percent postconsumer material standard is not obtainable at a reasonable price or does not meet reasonable performance standards.

(End of clause)

52.204-7 CENTRAL CONTRACTOR REGISTRATION (OCT 2003)

(a) Definitions. As used in this clause--

Central Contractor Registration (CCR) database means the primary Government repository for Contractor information required for the conduct of business with the Government.

Data Universal Numbering System (DUNS) number means the 9-digit number assigned by Dun and Bradstreet, Inc. (D&B) to identify unique business entities.

Data Universal Numbering System +4 (DUNS+4) number means the DUNS number assigned by D&B plus a 4-character suffix that may be assigned by a business concern. (D&B has no affiliation with this 4-character suffix.) This 4-character suffix may be assigned at the discretion of the business concern to establish additional CCR records for identifying alternative Electronic Funds Transfer (EFT) accounts (see the FAR at Subpart 32.11) for the same parent concern.

Registered in the CCR database means that--

(1) The Contractor has entered all mandatory information, including the DUNS number or the DUNS+4 number, into the CCR database; and

(2) The Government has validated all mandatory data fields and has marked the record “Active”.

(b)(1) By submission of an offer, the offeror acknowledges the requirement that a prospective awardee shall be registered in the CCR database prior to award, during performance, and through final payment of any contract, basic agreement, basic ordering agreement, or blanket purchasing agreement resulting from this solicitation.

(2) The offeror shall enter, in the block with its name and address on the cover page of its offer, the annotation “DUNS” or “DUNS +4” followed by the DUNS or DUNS +4 number that identifies the offeror's name and address exactly as stated in the offer. The DUNS number will be used by the Contracting Officer to verify that the offeror is registered in the CCR database.

(c) If the offeror does not have a DUNS number, it should contact Dun and Bradstreet directly to obtain one.

(1) An offeror may obtain a DUNS number--

(i) If located within the United States, by calling Dun and Bradstreet at 1-866-705-5711 or via the Internet at http://www.dnb.com; or

(ii) If located outside the United States, by contacting the local Dun and Bradstreet office.

(2) The offeror should be prepared to provide the following information:

(i) Company legal business.

(ii) Tradestyle, doing business, or other name by which your entity is commonly recognized.

(iii) Company Physical Street Address, City, State, and Zip Code.

(iv) Company Mailing Address, City, State and Zip Code (if separate from physical).

(v) Company Telephone Number.

(vi) Date the company was started.

(vii) Number of employees at your location.

(viii) Chief executive officer/key manager.

(ix) Line of business (industry).

(x) Company Headquarters name and address (reporting relationship within your entity).

(d) If the Offeror does not become registered in the CCR database in the time prescribed by the Contracting Officer, the Contracting Officer will proceed to award to the next otherwise successful registered Offeror.

(e) Processing time, which normally takes 48 hours, should be taken into consideration when registering. Offerors who are not registered should consider applying for registration immediately upon receipt of this solicitation.

(f) The Contractor is responsible for the accuracy and completeness of the data within the CCR database, and for any liability resulting from the Government's reliance on inaccurate or incomplete data. To remain registered in the CCR database after the initial registration, the Contractor is required to review and update on an annual basis from the date of initial registration or subsequent updates its information in the CCR database to ensure it is current, accurate and complete. Updating information in the CCR does not alter the terms and conditions of this contract and is not a substitute for a properly executed contractual document.

(g)(1)(i) If a Contractor has legally changed its business name, “doing business as” name, or division name (whichever is shown on the contract), or has transferred the assets used in performing the contract, but has not completed the necessary requirements regarding novation and change-of-name agreements in Subpart 42.12, the Contractor shall provide the responsible Contracting Officer a minimum of one business day's written notification of its intention to (A) change the name in the CCR database; (B) comply with the requirements of Subpart 42.12 of the FAR; and (C) agree in writing to the timeline and procedures specified by the responsible Contracting Officer. The Contractor must provide with the notification sufficient documentation to support the legally changed name.

(ii) If the Contractor fails to comply with the requirements of paragraph (g)(1)(i) of this clause, or fails to perform the agreement at paragraph (g)(1)(i)(C) of this clause, and, in the absence of a properly executed novation or change-of-name agreement, the CCR information that shows the Contractor to be other than the Contractor indicated in the contract will be considered to be incorrect information within the meaning of the “Suspension of Payment” paragraph of the electronic funds transfer (EFT) clause of this contract.

(2) The Contractor shall not change the name or address for EFT payments or manual payments, as appropriate, in the CCR record to reflect an assignee for the purpose of assignment of claims (see FAR Subpart 32.8, Assignment of

Claims). Assignees shall be separately registered in the CCR database. Information provided to the Contractor's CCR record that indicates payments, including those made by EFT, to an ultimate recipient other than that Contractor will be considered to be incorrect information within the meaning of the “Suspension of payment” paragraph of the EFT clause of this contract.

(h) Offerors and Contractors may obtain information on registration and annual confirmation requirements via the internet at http://www.ccr.gov or by calling 1-888-227-2423, or 269-961-5757.

(End of clause)

52.209-6 PROTECTING THE GOVERNMENT'S INTEREST WHEN SUBCONTRACTING WITH CONTRACTORS DEBARRED, SUSPENDED, OR PROPOSED FOR DEBARMENT (JUL 1995)

(a) The Government suspends or debars Contractors to protect the Government's interests. The Contractor shall not enter into any subcontract in excess of the $25,000 with a Contractor that is debarred, suspended, or proposed for debarment unless there is a compelling reason to do so.

(b) The Contractor shall require each proposed first-tier subcontractor, whose subcontract will exceed $25,000, to disclose to the Contractor, in writing, whether as of the time of award of the subcontract, the subcontractor, or its principles, is or is not debarred, suspended, or proposed for debarment by the Federal Government.

(c) A corporate officer or a designee of the Contractor shall notify the Contracting Officer, in writing, before entering into a subcontract with a party that is debarred, suspended, or proposed for debarment (see FAR 9.404 for information on the List of Parties Excluded from Federal Procurement and Nonprocurement Programs). The notice must include the following:

(1) The name of the subcontractor.

(2) The Contractor's knowledge of the reasons for the subcontractor being on the List of Parties Excluded from Federal Procurement and Nonprocurement Programs.

(3) The compelling reason(s) for doing business with the subcontractor notwithstanding its inclusion on the List of Parties Excluded from Federal Procurement and Nonprocurement Programs.

(4) The systems and procedures the Contractor has established to ensure that it is fully protecting the Government's interests when dealing with such subcontractor in view of the specific basis for the party's debarment, suspension, or proposed debarment.

(End of clause)

52.211-10 COMMENCEMENT, PROSECUTION, AND COMPLETION OF WORK (APR 1984)

The Contractor shall be required to (a) commence work under this contract within **10** calendar days after the date the Contractor receives the notice to proceed, (b) prosecute the work diligently, and (c) complete the entire work ready for use not later than **540** calendar days after date of receipt by Contractor of notice to proceed. The time stated for completion shall include final cleanup of the premises.

*The Contracting Officer shall specify either a number of days after the date the contractor receives the notice to proceed, or a calendar date.

(End of clause)

52.211-12 LIQUIDATED DAMAGES--CONSTRUCTION (SEP 2000)

(a) If the Contractor fails to complete the work within the time specified in the contract, the Contractor shall pay liquidated damages to the Government in the amount of **$952.**00 for each calendar day of delay until the work is completed or accepted.

(b) If the Government terminates the Contractor's right to proceed, liquidated damages will continue to accrue until the work is completed. These liquidated damages are in addition to excess costs of repurchase under the Termination clause.

(End of clause)

52.211-13 TIME EXTENSIONS (SEP 2000)

Time extensions for contract changes will depend upon the extent, if any, by which the changes cause delay in the completion of the various elements of construction. The change order granting the time extension may provide that the contract completion date will be extended only for those specific elements related to the changed work and that the remaining contract completion dates for all other portions of the work will not be altered. The change order also may provide an equitable readjustment of liquidated damages under the new completion schedule.

(End of clause)

52.212-4007 ENVIRONMENTAL LITIGATION

(a) If the performance of all or any part of the work is suspended, delayed, or interrupted due to an order of a court of competent jurisdiction as a result of environmental litigation, as defined below, the Contracting Officer, at the request of the Contractor, shall determine whether the order is due in any part to the acts or omissions of the Contractor or a Subcontractor at any tier not required by the terms of this contract. If it is determined that the order is not due in any part to acts or omissions of the Contractor or a Subcontractor at any tier other than as required by the terms of this contract, such suspension, delay, or interruption shall be considered as if ordered by the Contracting Officer in the administration of this contract under the terms of the "Suspension of Work" clause of this contract. The period of such suspension, delay or interruption shall be considered unreasonable, and an adjustment shall be made for any increase in the cost of performance of this contract (excluding profit) as provided in that clause, subject to all the provisions thereof.

(b) The term "environmental litigation", as used herein, means a lawsuit alleging that the work will have an adverse effect on the environment or that the Government has not duly considered, either substantially or procedurally, the effect of the work on the environment.

52.215-2 AUDIT AND RECORDS--NEGOTIATION (JUN 1999)

(a) As used in this clause, "records" includes books, documents, accounting procedures and practices, and other

data, regardless of type and regardless of whether such items are in written form, in the form of computer data, or in any other form.

(b) Examination of costs. If this is a cost-reimbursement, incentive, time-and-materials, labor-hour, or price redeterminable contract, or any combination of these, the Contractor shall maintain and the Contracting Officer, or an authorized representative of the Contracting Officer, shall have the right to examine and audit all records and other evidence sufficient to reflect properly all costs claimed to have been incurred or anticipated to be incurred directly or indirectly in performance of this contract. This right of examination shall include inspection at all reasonable times of the Contractor's plants, or parts of them, engaged in performing the contract.

(c) Cost or pricing data. If the Contractor has been required to submit cost or pricing data in connection with any pricing action relating to this contract, the Contracting Officer, or an authorized representative of the Contracting Officer, in order to evaluate the accuracy, completeness, and currency of the cost or pricing data, shall have the right to examine and audit all of the Contractor's records, including computations and projections, related to--

(1) The proposal for the contract, subcontract, or modification;

(2) The discussions conducted on the proposal(s), including those related to negotiating;

(3) Pricing of the contract, subcontract, or modification; or

(4) Performance of the contract, subcontract or modification.

(d) Comptroller General--(1) The Comptroller General of the United States, or an authorized representative, shall have access to and the right to examine any of the Contractor's directly pertinent records involving transactions related to this contract or a subcontract hereunder.

(2) This paragraph may not be construed to require the Contractor or subcontractor to create or maintain any record that the Contractor or subcontractor does not maintain in the ordinary course of business or pursuant to a provision of law.

(e) Reports. If the Contractor is required to furnish cost, funding, or performance reports, the Contracting Officer or an authorized representative of the Contracting Officer shall have the right to examine and audit the supporting records and materials, for the purpose of evaluating (1) the effectiveness of the Contractor's policies and procedures to produce data compatible with the objectives of these reports and (2) the data reported.

(f) Availability. The Contractor shall make available at its office at all reasonable times the records, materials, and other evidence described in paragraphs (a), (b), (c), (d), and (e) of this clause, for examination, audit, or reproduction, until 3 years after final payment under this contract or for any shorter period specified in Subpart 4.7, Contractor Records Retention, of the Federal Acquisition Regulation (FAR), or for any longer period required by statute or by other clauses of this contract. In addition--

(1) If this contract is completely or partially terminated, the Contractor shall make available the records relating to the work terminated until 3 years after any resulting final termination settlement; and

(2) The Contractor shall make available records relating to appeals under the Disputes clause or to litigation or the settlement of claims arising under or relating to this contract until such appeals, litigation, or claims are finally resolved.

(g) The Contractor shall insert a clause containing all the terms of this clause, including this paragraph (g), in all subcontracts under this contract that exceed the simplified acquisition threshold, and--

(1) That are cost-reimbursement, incentive, time-and-materials, labor-hour, or price-redeterminable type or any

combination of these;

(2) For which cost or pricing data are required; or

(3) That require the subcontractor to furnish reports as discussed in paragraph (e) of this clause.

The clause may be altered only as necessary to identify properly the contracting parties and the Contracting Officer under the Government prime contract.

(End of clause)

52.215-8 ORDER OF PRECEDENCE--UNIFORM CONTRACT FORMAT (OCT 1997)

Any inconsistency in this solicitation or contract shall be resolved by giving precedence in the following order:

(a) The Schedule (excluding the specifications).

(b) Representations and other instructions.

(c) Contract clauses.

(d) Other documents, exhibits, and attachments.

(e) The specifications.

(End of clause)

52.215-11 PRICE REDUCTION FOR DEFECTIVE COST OR PRICING DATA--MODIFICATIONS (OCT 1997)

(a) This clause shall become operative only for any modification to this contract involving a pricing adjustment expected to exceed the threshold for submission of cost or pricing data at FAR 15.403-4, except that this clause does not apply to any modification if an exception under FAR 15.403-1 applies.

(b) If any price, including profit or fee, negotiated in connection with any modification under this clause, or any cost reimbursable under this contract, was increased by any significant amount because (1) the Contractor or a subcontractor furnished cost or pricing data that were not complete, accurate, and current as certified in its Certificate of Current Cost or Pricing Data, (2) a subcontractor or prospective subcontractor furnished the Contractor cost or pricing data that were not complete, accurate, and current as certified in the Contractor's Certificate of Current Cost or Pricing Data, or (3) any of these parties furnished data of any description that were not accurate, the price or cost shall be reduced accordingly and the contract shall be modified to reflect the reduction. This right to a price reduction is limited to that resulting from defects in data relating to modifications for which this clause becomes operative under paragraph (a) of this clause.

(c) Any reduction in the contract price under paragraph (b) of this clause due to defective data from a prospective subcontractor that was not subsequently awarded the subcontract shall be limited to the amount, plus applicable overhead and profit markup, by which--

(1) The actual subcontract; or

(2) The actual cost to the Contractor, if there was no subcontract, was less than the prospective subcontract cost estimate submitted by the Contractor; provided, that the actual subcontract price was not itself affected by defective cost or pricing data.

(d)(1) If the Contracting Officer determines under paragraph (b) of this clause that a price or cost reduction should be made, the Contractor agrees not to raise the following matters as a defense:

(i) The Contractor or subcontractor was a sole source supplier or otherwise was in a superior bargaining position and thus the price of the contract would not have been modified even if accurate, complete, and current cost or pricing data had been submitted.

(ii) The Contracting Officer should have known that the cost or pricing data in issue were defective even though the Contractor or subcontractor took no affirmative action to bring the character of the data to the attention of the Contracting Officer.

(iii) The contract was based on an agreement about the total cost of the contract and there was no agreement about the cost of each item procured under the contract.

(iv) The Contractor or subcontractor did not submit a Certificate of Current Cost or Pricing Data.

(2)(i) Except as prohibited by subdivision (d)(2)(ii) of this clause, an offset in an amount determined appropriate by the Contracting Officer based upon the facts shall be allowed against the amount of a contract price reduction if--

(A) The Contractor certifies to the Contracting Officer that, to the best of the Contractor's knowledge and belief, the Contractor is entitled to the offset in the amount requested; and

(B) The Contractor proves that the cost or pricing data were available before the “as of” date specified on its Certificate of Current Cost or Pricing Data, and that the data were not submitted before such date.

(ii) An offset shall not be allowed if--

(A) The understated data were known by the Contractor to be understated before the “as of” date specified on its Certificate of Current Cost or Pricing Data; or

(B) The Government proves that the facts demonstrate that the contract price would not have increased in the amount to be offset even if the available data had been submitted before the “as of” date specified on its Certificate of Current Cost or Pricing Data.

(e) If any reduction in the contract price under this clause reduces the price of items for which payment was made prior to the date of the modification reflecting the price reduction, the Contractor shall be liable to and shall pay the United States at the time such overpayment is repaid--

(1) Simple interest on the amount of such overpayment to be computed from the date(s) of overpayment to the Contractor to the date the Government is repaid by the Contractor at the applicable underpayment rate effective for each quarter prescribed by the Secretary of the Treasury under 26 U.S.C. 6621(a)(2); and

A penalty equal to the amount of the overpayment, if the Contractor or subcontractor knowingly submitted cost or pricing data that were incomplete, inaccurate, or noncurrent.

(End of clause)

52.215-13 SUBCONTRACTOR COST OR PRICING DATA--MODIFICATIONS (OCT 1997)

(a) The requirements of paragraphs (b) and (c) of this clause shall--

(1) Become operative only for any modification to this contract involving a pricing adjustment expected to exceed the threshold for submission of cost or pricing data at FAR 15.403-4; and

(2) Be limited to such modifications.

(b) Before awarding any subcontract expected to exceed the threshold for submission of cost or pricing data at FAR 15.403-4, on the date of agreement on price or the date of award, whichever is later; or before pricing any subcontract modification involving a pricing adjustment expected to exceed the threshold for submission of cost or pricing data at FAR 15.403-4, the Contractor shall require the subcontractor to submit cost or pricing data (actually or by specific identification in writing), unless an exception under FAR 15.403-1 applies.

(c) The Contractor shall require the subcontractor to certify in substantially the form prescribed in FAR 15.406-2 that, to the best of its knowledge and belief, the data submitted under paragraph (b) of this clause were accurate, complete, and current as of the date of agreement on the negotiated price of the subcontract or subcontract modification.

The Contractor shall insert the substance of this clause, including this paragraph (d), in each subcontract that exceeds the threshold for submission of cost or pricing data at FAR 15.403-4 on the date of agreement on price or the date of award, whichever is later.

(End of clause)

52.215-19 NOTIFICATION OF OWNERSHIP CHANGES (OCT 1997)

(a) The Contractor shall make the following notifications in writing:

(1) When the Contractor becomes aware that a change in its ownership has occurred, or is certain to occur, that could result in changes in the valuation of its capitalized assets in the accounting records, the Contractor shall notify the Administrative Contracting Officer (ACO) within 30 days.

(2) The Contractor shall also notify the ACO within 30 days whenever changes to asset valuations or any other cost changes have occurred or are certain to occur as a result of a change in ownership.

(b) The Contractor shall--

(1) Maintain current, accurate, and complete inventory records of assets and their costs;

(2) Provide the ACO or designated representative ready access to the records upon request;

(3) Ensure that all individual and grouped assets, their capitalized values, accumulated depreciation or amortization, and remaining useful lives are identified accurately before and after each of the Contractor's ownership changes; and

(4) Retain and continue to maintain depreciation and amortization schedules based on the asset records maintained before each Contractor ownership change.

The Contractor shall include the substance of this clause in all subcontracts under this contract that meet the applicability requirement of FAR 15.408(k).

(End of clause)

52.215-21 REQUIREMENTS FOR COST OR PRICING DATA OR INFORMATION OTHER THAN COST OR PRICING DATA--MODIFICATIONS (OCT 1997)

(a) Exceptions from cost or pricing data. (1) In lieu of submitting cost or pricing data for modifications under this contract, for price adjustments expected to exceed the threshold set forth at FAR 15.403-4 on the date of the agreement on price or the date of the award, whichever is later, the Contractor may submit a written request for exception by submitting the information described in the following subparagraphs. The Contracting Officer may require additional supporting information, but only to the extent necessary to determine whether an exception should be granted, and whether the price is fair and reasonable--

(i) Identification of the law or regulation establishing the price offered. If the price is controlled under law by periodic rulings, reviews, or similar actions of a governmental body, attach a copy of the controlling document, unless it was previously submitted to the contracting office.

(ii) Information on modifications of contracts or subcontracts for commercial items. (A) If--

(1) The original contract or subcontract was granted an exception from cost or pricing data requirements because the price agreed upon was based on adequate price competition or prices set by law or regulation, or was a contract or subcontract for the acquisition of a commercial item; and

(2) The modification (to the contract or subcontract) is not exempted based on one of these exceptions, then the Contractor may provide information to establish that the modification would not change the contract or subcontract from a contract or subcontract for the acquisition of a commercial item to a contract or subcontract for the acquisition of an item other than a commercial item.

(B) For a commercial item exception, the Contractor shall provide, at a minimum, information on prices at which the same item or similar items have previously been sold that is adequate for evaluating the reasonableness of the price of the modification. Such information may include--

(1) For catalog items, a copy of or identification of the catalog and its date, or the appropriate pages for the offered items, or a statement that the catalog is on file in the buying office to which the proposal is being submitted. Provide a copy or describe current discount policies and price lists (published or unpublished), e.g., wholesale, original equipment manufacturer, or reseller. Also explain the basis of each offered price and its relationship to the established catalog price, including how the proposed price relates to the price of recent sales in quantities similar to the proposed quantities.

(2) For market-priced items, the source and date or period of the market quotation or other basis for market price, the base amount, and applicable discounts. In addition, describe the nature of the market.

(3) For items included on an active Federal Supply Service Multiple Award Schedule contract, proof that an exception has been granted for the schedule item.

(2) The Contractor grants the Contracting Officer or an authorized representative the right to examine, at any time before award, books, records, documents, or other directly pertinent records to verify any request for an exception under this clause, and the reasonableness of price. For items priced using catalog or market prices, or law or regulation , access does not extend to cost or profit information or other data relevant solely to the Contractor's determination of the prices to be offered in the catalog or marketplace.

(b) Requirements for cost or pricing data. If the Contractor is not granted an exception from the requirement to submit cost or pricing data, the following applies:

(1) The Contractor shall submit cost or pricing data and supporting attachments in accordance with Table 15-2 of FAR 15.408.

As soon as practicable after agreement on price, but before award (except for unpriced actions), the Contractor shall submit a Certificate of Current Cost or Pricing Data, as prescribed by FAR 15.406-2.

(End of clause)

52.217-9 OPTION TO EXTEND THE TERM OF THE CONTRACT (MAR 2000)

(a) The Government may extend the term of this contract by written notice to the Contractor within **ten (10) days before completion of the contract**; provided that the Government gives the Contractor a preliminary written notice of its intent to extend at least **60 days** before the contract expires. The preliminary notice does not commit the Government to an extension.

(b) If the Government exercises this option, the extended contract shall be considered to include this option clause.

(c) The total duration of this contract, including the exercise of any options under this clause, shall not exceed **360540 calendar days.**
(End of clause)

52.219-8 UTILIZATION OF SMALL BUSINESS CONCERNS (MAY 2004)

(a) It is the policy of the United States that small business concerns, veteran-owned small business concerns, service-disabled veteran-owned small business concerns, HUBZone small business concerns, small disadvantaged business concerns, and women-owned small business concerns shall have the maximum practicable opportunity to participate in performing contracts let by any Federal agency, including contracts and subcontracts for subsystems, assemblies, components, and related services for major systems. It is further the policy of the United States that its prime contractors establish procedures to ensure the timely payment of amounts due pursuant to the terms of their subcontracts with small business concerns, veteran-owned small business concerns, service-disabled veteran-owned small business concerns, HUBZone small business concerns, small disadvantaged business concerns, and women-owned small business concerns.

(b) The Contractor hereby agrees to carry out this policy in the awarding of subcontracts to the fullest extent consistent with efficient contract performance. The Contractor further agrees to cooperate in any studies or surveys as may be conducted by the United States Small Business Administration or the awarding agency of the United States as may be necessary to determine the extent of the Contractor's compliance with this clause.

Definitions. As used in this contract--

HUBZone small business concern means a small business concern that appears on the List of Qualified HUBZone Small Business Concerns maintained by the Small Business Administration.

Service-disabled veteran-owned small business concern--

(1) Means a small business concern--

(i) Not less than 51 percent of which is owned by one or more service-disabled veterans or, in the case of any publicly owned business, not less than 51 percent of the stock of which is owned by one or more service-disabled veterans; and

(ii) The management and daily business operations of which are controlled by one or more service-disabled veterans or, in the case of a service-disabled veteran with permanent and severe disability, the spouse or permanent caregiver of such veteran.

(2) Service-disabled veteran means a veteran, as defined in 38 U.S.C. 101(2), with a disability that is service-connected, as defined in 38 U.S.C. 101(16).

Small business concern means a small business as defined pursuant to Section 3 of the Small Business Act and relevant regulations promulgated pursuant thereto.

Small disadvantaged business concern means a small business concern that represents, as part of its offer that--

(1) It has received certification as a small disadvantaged business concern consistent with 13 CFR part 124, subpart B;

(2) No material change in disadvantaged ownership and control has occurred since its certification;

(3) Where the concern is owned by one or more individuals, the net worth of each individual upon whom the certification is based does not exceed $750,000 after taking into account the applicable exclusions set forth at 13 CFR 124.104(c)(2); and

(4) It is identified, on the date of its representation, as a certified small disadvantaged business in the database maintained by the Small Business Administration (PRO-Net).

Veteran-owned small business concern means a small business concern--

(1) Not less than 51 percent of which is owned by one or more veterans (as defined at 38 U.S.C. 101(2)) or, in the case of any publicly owned business, not less than 51 percent of the stock of which is owned by one or more veterans; and

(2) The management and daily business operations of which are controlled by one or more veterans.

Women-owned small business concern means a small business concern--

(1) That is at least 51 percent owned by one or more women, or, in the case of any publicly owned business, at least 51 percent of the stock of which is owned by one or more women; and

(2) Whose management and daily business operations are controlled by one or more women.

(d) Contractors acting in good faith may rely on written representations by their subcontractors regarding their status as a small business concern, a veteran-owned small business concern, a service-disabled veteran-owned small business concern, a HUBZone small business concern, a small disadvantaged business concern, or a women-owned small business concern.

(End of clause)

52.219-14 LIMITATIONS ON SUBCONTRACTING (DEC 1996)

(a) This clause does not apply to the unrestricted portion of a partial set-aside.

(b) By submission of an offer and execution of a contract, the Offeror/Contractor agrees that in performance of the contract in the case of a contract for--

(1) Services (except construction). At least 50 percent of the cost of contract performance incurred for personnel shall be expended for employees of the concern.

(2) Supplies (other than procurement from a nonmanufacturer of such supplies). The concern shall perform work for at least 50 percent of the cost of manufacturing the supplies, not including the cost of materials.

(3) General construction. The concern will perform at least 15 percent of the cost of the contract, not including the cost of materials, with its own employees.

(4) Construction by special trade contractors. The concern will perform at least 25 percent of the cost of the contract, not including the cost of materials, with its own employees.

52.222-1 NOTICE TO THE GOVERNMENT OF LABOR DISPUTES (FEB 1997)

If the Contractor has knowledge that any actual or potential labor dispute is delaying or threatens to delay the timely performance of this contract, the Contractor shall immediately give notice, including all relevant information, to the Contracting Officer.

(End of clause)

52.222-3 CONVICT LABOR (JUN 2003)

(a) Except as provided in paragraph (b) of this clause, the Contractor shall not employ in the performance of this contract any person undergoing a sentence of imprisonment imposed by any court of a State, the District of Columbia, Puerto Rico, the Northern Mariana Islands, American Samoa, Guam, or the U.S. Virgin Islands.

(b) The Contractor is not prohibited from employing persons--

(1) On parole or probation to work at paid employment during the term of their sentence;

(2) Who have been pardoned or who have served their terms; or

(3) Confined for violation of the laws of any of the States, the District of Columbia, Puerto Rico, the Northern Mariana Islands, American Samoa, Guam, or the U.S. Virgin Islands who are authorized to work at paid employment in the community under the laws of such jurisdiction, if--

(i) The worker is paid or is in an approved work training program on a voluntary basis;

(ii) Representatives of local union central bodies or similar labor union organizations have been consulted;

(iii) Such paid employment will not result in the displacement of employed workers, or be applied in skills, crafts, or trades in which there is a surplus of available gainful labor in the locality, or impair existing contracts for services;

(iv) The rates of pay and other conditions of employment will not be less than those paid or provided for work of a similar nature in the locality in which the work is being performed; and

(v) The Attorney General of the United States has certified that the work-release laws or **regulations** of the jurisdiction involved are in conformity with the requirements of Executive Order 11755, as amended by Executive Orders 12608 and 12943.

(End of clause)

52.222-4 CONTRACT WORK HOURS AND SAFETY STANDARDS ACT - OVERTIME COMPENSATION. (SEP 2000)

(a) Overtime requirements. No Contractor or subcontractor employing laborers or mechanics (see Federal Acquisition Regulation 22.300) shall require or permit them to work over 40 hours in any workweek unless they are paid at least 1 and 1/2 times the basic rate of pay for each hour worked over 40 hours.

(b) Violation; liability for unpaid wages; liquidated damages. The responsible Contractor and subcontractor are liable for unpaid wages if they violate the terms in paragraph (a) of this clause. In addition, the Contractor and subcontractor are liable for liquidated damages payable to the Government. The Contracting Officer will assess liquidated damages at the rate of $10 per affected employee for each calendar day on which the employer required or permitted the employee to work in excess of the standard workweek of 40 hours without paying overtime wages required by the Contract Work Hours and Safety Standards Act.

(c) Withholding for unpaid wages and liquidated damages. The Contracting Officer will withhold from payments due under the contract sufficient funds required to satisfy any Contractor or subcontractor liabilities for unpaid wages and liquidated damages. If amounts withheld under the contract are insufficient to satisfy Contractor or subcontractor liabilities, the Contracting Officer will withhold payments from other Federal or Federally assisted contracts held by the same Contractor that are subject to the Contract Work Hours and Safety Standards Act.

(d) Payrolls and basic records.

(1) The Contractor and its subcontractors shall maintain payrolls and basic payroll records for all laborers and mechanics working on the contract during the contract and shall make them available to the Government until 3 years after contract completion. The records shall contain the name and address of each employee, social security number, labor classifications, hourly rates of wages paid, daily and weekly number of hours worked, deductions made, and actual wages paid. The records need not duplicate those required for construction work by Department of Labor regulations at 29 CFR 5.5(a)(3) implementing the Davis-Bacon Act.

(2) The Contractor and its subcontractors shall allow authorized representatives of the Contracting Officer or the Department of Labor to inspect, copy, or transcribe records maintained under paragraph (d)(1) of this clause. The Contractor or subcontractor also shall allow authorized representatives of the Contracting Officer or Department of Labor to interview employees in the workplace during working hours.

(e) Subcontracts. The Contractor shall insert the provisions set forth in paragraphs (a) through (d) of this clause in subcontracts exceeding $100,000 and require subcontractors to include these provisions in any lower tier subcontracts. The Contractor shall be responsible for compliance by any subcontractor or lower-tier subcontractor with the provisions set forth in paragraphs (a) through (d) of this clause.

(End of clause)

52.222-6 DAVIS-BACON ACT (FEB 1995)

(a) All laborers and mechanics employed or working upon the site of the work will be paid unconditionally and not less often than once a week, and without subsequent deduction or rebate on any account (except such payroll deductions as are permitted by regulations issued by the Secretary of Labor under the Copeland Act (29 CFR Part 3), the full amount of wages and bona fide fringe benefits (or cash equivalents thereof) due at time of payment computed at rates not less than those contained in the wage determination of the Secretary of Labor which is attached hereto and made a part hereof, regardless of any contractual relationship which may be alleged to exist between the Contractor and such laborers and mechanics. Contributions made or costs reasonably anticipated for bona fide fringe benefits under section 1(b)(2) of the Davis-Bacon Act on behalf of laborers or mechanics are considered wages paid to such laborers or mechanics, subject to the provisions of paragraph (d) of this clause; also, regular contributions made or costs incurred for more than a weekly period (but not less often than quarterly) under plans, funds, or programs which cover the particular weekly period, are deemed to be constructively made or incurred during such period. Such laborers and mechanics shall be paid not less than the appropriate wage rate and fringe benefits in the wage determination for the classification of work actually performed, without regard to skill, except as provided in the clause entitled Apprentices and Trainees. Laborers or mechanics performing work in more than one classification may be compensated at the rate specified for each classification for the time actually worked therein; provided, That the employer's payroll records accurately set forth the time spent in each classification in which work is performed. The wage determination (including any additional classifications and wage rates conformed under paragraph (b) of this clause) and the Davis-Bacon poster (WH-1321) shall be posted at all times by the Contractor and its subcontractors at the site of the work in a prominent and accessible place where it can be easily seen by the workers.

(b)(1) The Contracting Officer shall require that any class of laborers or mechanics which is not listed in the wage determination and which is to be employed under the contract shall be classified in conformance with the wage determination. The Contracting Officer shall approve an additional classification and wage rate and fringe benefits therefor only when all the following criteria have been met:

(i) The work to be performed by the classification requested is not performed by a classification in the wage determination.

(ii) The classification is utilized in the area by the construction industry.

(iii) The proposed wage rate, including any bona fide fringe benefits, bears a reasonable relationship to the wage rates contained in the wage determination.

(2) If the Contractor and the laborers and mechanics to be employed in the classification (if known), or their representatives, and the Contracting Officer agree on the classification and wage rate (including the amount designated for fringe benefits, where appropriate), a report of the action taken shall be sent by the Contracting Officer to the Administrator of the Wage and Hour Division, Employment Standards Administration, U.S. Department of Labor, Washington, DC 20210. The Administrator or an authorized representative will approve, modify, or disapprove every additional classification action within 30 days of receipt and so advise the Contracting Officer or will notify the Contracting Officer within the 30-day period that additional time is necessary.

(3) In the event the Contractor, the laborers or mechanics to be employed in the classification, or their representatives, and the Contracting Officer do not agree on the proposed classification and wage rate (including the amount designated for fringe benefits, where appropriate), the Contracting Officer shall refer the questions, including the views of all interested parties and the recommendation of the Contracting Officer, to the Administrator of the Wage and Hour Division for determination. The Administrator, or an authorized representative, will issue a determination within 30 days of receipt and so advise the Contracting Officer or will notify the Contracting Officer within the 30-day period that additional time is necessary.

(4) The wage rate (including fringe benefits, where appropriate) determined pursuant to subparagraphs (b)(2) and (b)(3) of this clause shall be paid to all workers performing work in the classification under this contract from the first day on which work is performed in the classification.

(c) Whenever the minimum wage rate prescribed in the contract for a class of laborers or mechanics includes a fringe benefit which is not expressed as an hourly rate, the Contractor shall either pay the benefit as stated in the wage determination or shall pay another bona fide fringe benefit or an hourly cash equivalent thereof.

(3) If the Contractor does not make payments to a trustee or other third person, the Contractor may consider as part of the wages of any laborer or mechanic the amount of any costs reasonably anticipated in providing bona fide fringe benefits under a plan or program; provided, That the Secretary of Labor has found, upon the written request of the Contractor, that the applicable standards of the Davis-Bacon Act have been met. The Secretary of Labor may require the Contractor to set aside in a separate account assets for the meeting of obligations under the plan or program.

(End of clause)

52.222-7 WITHHOLDING OF FUNDS (FEB 1988)

The Contracting Officer shall, upon his or her own action or upon written request of an authorized representative of the Department of Labor, withhold or cause to be withheld from the Contractor under this contract or any other Federal contract with the same Prime Contractor, or any other Federally assisted contract subject to Davis-Bacon prevailing wage requirements, which is held by the same Prime Contractor, so much of the accrued payments or advances as may be considered necessary to pay laborers and mechanics, including apprentices, trainees, and helpers, employed by the Contractor or any subcontractor the full amount of wages required by the contract. In the event of failure to pay any laborer or mechanic, including any apprentice, trainee, or helper, employed or working on the site of the work, all or part of the wages required by the contract, the Contracting Officer may, after written notice to the Contractor, take such action as may be necessary to cause the suspension of any further payment, advance, or guarantee of funds until such violations have ceased.

(End of clause)

52.222-8 PAYROLLS AND BASIC RECORDS (FEB 1988)

(a) Payrolls and basic records relating thereto shall be maintained by the Contractor during the course of the work and preserved for a period of 3 years thereafter for all laborers and mechanics working at the site of the work. Such records shall contain the name, address, and social security number of each such worker, his or her correct classification, hourly rates of wages paid (including rates of contributions or costs anticipated for bona fide fringe benefits or cash equivalents thereof of the types described in section 1(b)(2)(B) of the Davis-Bacon Act), daily and weekly number of hours worked, deductions made, and actual wages paid. Whenever the Secretary of Labor has found, under paragraph (d) of the clause entitled Davis-Bacon Act, that the wages of any laborer or mechanic include the amount of any costs reasonably anticipated in providing benefits under a plan or program described in section 1(b)(2)(B) of the Davis-Bacon Act, the Contractor shall maintain records which show that the commitment to provide such benefits is enforceable, that the plan or program is financially responsible, and that the plan or program has been communicated in writing to the laborers or mechanics affected, and records which show the costs anticipated or the actual cost incurred in providing such benefits. Contractors employing apprentices or trainees under approved programs shall maintain written evidence of the registration of apprenticeship programs and certification of trainee programs, the registration of the apprentices and trainees, and the ratios and wage rates prescribed in the applicable programs.

(b)(1) The Contractor shall submit weekly for each week in which any contract work is performed a copy of all payrolls to the Contracting Officer. The payrolls submitted shall set out accurately and completely all of the information required to be maintained under paragraph (a) of this clause. This information may be submitted in any form desired. Optional Form WH-347 (Federal Stock Number 029-005-00014-1) is available for this purpose and may be purchased from the Superintendent of Documents, U.S. Government Printing Office, Washington, DC 20402. The Prime Contractor is responsible for the submission of copies of payrolls by all subcontractors.

(2) Each payroll submitted shall be accompanied by a "Statement of Compliance," signed by the Contractor or subcontractor or his or her agent who pays or supervises the payment of the persons employed under the contract and shall certify--

(i) That the payroll for the payroll period contains the information required to be maintained under paragraph (a) of this clause and that such information is correct and complete;

(ii) That each laborer or mechanic (including each helper, apprentice, and trainee) employed on the contract during the payroll period has been paid the full weekly wages earned, without rebate, either directly or indirectly, and that no deductions have been made either directly or indirectly from the full wages earned, other than permissible deductions as set forth in the Regulations, 29 CFR Part 3; and

(iii) That each laborer or mechanic has been paid not less than the applicable wage rates and fringe benefits or cash equivalents for the classification of work performed, as specified in the applicable wage determination incorporated into the contract.

(3) The weekly submission of a properly executed certification set forth on the reverse side of Optional Form WH-347 shall satisfy the requirement for submission of the "Statement of Compliance" required by subparagraph (b)(2) of this clause.

(4) The falsification of any of the certifications in this clause may subject the Contractor or subcontractor to civil or criminal prosecution under Section 1001 of Title 18 and Section 3729 of Title 31 of the United States Code.

(c) The Contractor or subcontractor shall make the records required under paragraph (a) of this clause available for inspection, copying, or transcription by the Contracting Officer or authorized representatives of the Contracting Officer or the Department of Labor. The Contractor or subcontractor shall permit the Contracting Officer or representatives of the Contracting Officer or the Department of Labor to interview employees during working hours on the job. If the Contractor or subcontractor fails to submit required records or to make them available, the Contracting Officer may, after written notice to the Contractor, take such action as may be necessary to cause the suspension of any further payment. Furthermore, failure to submit the required records upon request or to make such records available may be grounds for debarment action pursuant to 29 CFR 5.12.

(End of clause)

52.222-9 APPRENTICES AND TRAINEES (FEB 1988)

(a) Apprentices. Apprentices will be permitted to work at less than the predetermined rate for the work they performed when they are employed pursuant to and individually registered in a bona fide apprenticeship program registered with the U.S. Department of Labor, Employment and Training Administration, Bureau of Apprenticeship and Training, or with a State Apprenticeship Agency recognized by the Bureau, or if a person is employed in his or her first 90 days of probationary employment as an apprentice in such an apprenticeship program, who is not individually registered in the program, but who has been certified by the Bureau of Apprenticeship and Training or a State Apprenticeship Agency (where appropriate) to be eligible for probationary employment as an apprentice. The allowable ratio of apprentices to journeymen on the job site in any craft classification shall not be greater than the

ratio permitted to the Contractor as to the entire work force under the registered program. Any worker listed on a payroll at an apprentice wage rate, who is not registered or otherwise employed as stated in this paragraph, shall be paid not less than the applicable wage determination for the classification of work actually performed. In addition, any apprentice performing work on the job site in excess of the ratio permitted under the registered program shall be paid not less than the applicable wage rate on the wage determination for the work actually performed. Where a contractor is performing construction on a project in a locality other than that in which its program is registered, the ratios and wage rates (expressed in percentages of the journeyman's hourly rate) specified in the Contractor's or subcontractor's registered program shall be observed. Every apprentice must be paid at not less than the rate specified in the registered program for the apprentice's level of progress, expressed as a percentage of the journeyman hourly rate specified in the applicable wage determination. Apprentices shall be paid fringe benefits in accordance with the provisions of the apprenticeship program. If the apprenticeship program does not specify fringe benefits, apprentices must be paid the full amount of fringe benefits listed on the wage determination for the applicable classification. If the Administrator determines that a different practice prevails for the applicable apprentice classification, fringes shall be paid in accordance with that determination. In the event the Bureau of Apprenticeship and Training, or a State Apprenticeship Agency recognized by the Bureau, withdraws approval of an apprenticeship program, the Contractor will no longer be permitted to utilize apprentices at less than the applicable predetermined rate for the work performed until an acceptable program is approved.

(b) Trainees. Except as provided in 29 CFR 5.16, trainees will not be permitted to work at less than the predetermined rate for the work performed unless they are employed pursuant to and individually registered in a program which has received prior approval, evidenced by formal certification by the U.S. Department of Labor, Employment and Training Administration. The ratio of trainees to journeymen on the job site shall not be greater than permitted under the plan approved by the Employment and Training Administration. Every trainee must be paid at not less than the rate specified in the approved program for the trainee's level of progress, expressed as a percentage of the journeyman hourly rate specified in the applicable wage determination. Trainees shall be paid fringe benefits in accordance with the provisions of the trainee program. If the trainee program does not mention fringe benefits, trainees shall be paid the full amount of fringe benefits listed in the wage determination unless the Administrator of the Wage and Hour Division determines that there is an apprenticeship program associated with the corresponding journeyman wage rate in the wage determination which provides for less than full fringe benefits for apprentices. Any employee listed on the payroll at a trainee rate who is not registered and participating in a training plan approved by the Employment and Training Administration shall be paid not less than the applicable wage rate in the wage determination for the classification of work actually performed. In addition, any trainee performing work on the job site in excess of the ratio permitted under the registered program shall be paid not less than the applicable wage rate in the wage determination for the work actually performed. In the event the Employment and Training Administration withdraws approval of a training program, the Contractor will no longer be permitted to utilize trainees at less than the applicable predetermined rate for the work performed until an acceptable program is approved.

(c) Equal employment opportunity. The utilization of apprentices, trainees, and journeymen under this clause shall be in conformity with the equal employment opportunity requirements of Executive Order 11246, as amended, and 29 CFR Part 30.

(End of clause)

52.222-10 COMPLIANCE WITH COPELAND ACT REQUIREMENTS (FEB 1988)

The Contractor shall comply with the requirements of 29 CFR Part 3, which are hereby incorporated by reference in this contract.

(End of clause)

52.222-11 SUBCONTRACTS (LABOR STANDARDS (FEB 1988)

(a) The Contractor or subcontractor shall insert in any subcontracts the clauses entitled Davis-Bacon Act, Contract Work Hours and Safety Standards Act-Overtime Compensation, Apprentices and Trainees, Payrolls and Basic Records, Compliance with Copeland Act Requirements, Withholding of Funds, Subcontracts (Labor Standards), Contract Termination-Debarment, Disputes Concerning Labor Standards, Compliance with Davis-Bacon and Related Act Regulations, and Certification of Eligibility, and such other clauses as the Contracting Officer may, by appropriate instructions, require, and also a clause requiring subcontractors to include these clauses in any lower tier subcontracts. The Prime Contractor shall be responsible for compliance by any subcontractor or lower tier subcontractor with all the contract clauses cited in this paragraph.

(b)(1) Within 14 days after award of the contract, the Contractor shall deliver to the Contracting Officer a completed Statement and Acknowledgment Form (SF 1413) for each subcontract, including the subcontractor's signed and dated acknowledgment that the clauses set forth in paragraph (a) of this clause have been included in the subcontract.

(ii) Within 14 days after the award of any subsequently awarded subcontract the Contractor shall deliver to the Contracting Officer an updated completed SF 1413 for such additional subcontract.

(End of clause)

52.222-12 CONTRACT TERMINATION--DEBARMENT (FEB 1988)

A breach of the contract clauses entitled Davis-Bacon Act, Contract Work Hours and Safety Standards Act--Overtime Compensation, Apprentices and Trainees, Payrolls and Basic Records, Compliance with Copeland Act Requirements, Subcontracts (Labor Standards), Compliance with Davis-Bacon and Related Act Regulations, or Certification of Eligibility may be grounds for termination of the contract, and for debarment as a Contractor and subcontractor as provided in 29 CFR 5.12.

(End of clause)

52.222-13 COMPLIANCE WITH DAVIS-BACON AND RELATED ACT REGULATIONS (FEB 1988)

All rulings and interpretations of the Davis-Bacon and Related Acts contained in 29 CFR Parts 1, 3, and 5 are hereby incorporated by reference in this contract.

(End of clause)

52.222-14 DISPUTES CONCERNING LABOR STANDARDS (FEB 1988)

The United States Department of Labor has set forth in 29 CFR Parts 5, 6, and 7 procedures for resolving disputes concerning labor standards requirements. Such disputes shall be resolved in accordance with those procedures and not the Disputes clause of this contract. Disputes within the meaning of this clause include disputes between the Contractor (or any of its subcontractors) and the contracting agency, the U.S. Department of Labor, or the employees or their representatives.

(End of clause)

52.222-15 CERTIFICATION OF ELIGIBILITY (FEB 1988)

(a) By entering into this contract, the Contractor certifies that neither it (nor he or she) nor any person or firm who has an interest in the Contractor's firm is a person or firm ineligible to be awarded Government contracts by virtue of section 3(a) of the Davis-Bacon Act or 29 CFR 5.12(a)(1).

(b) No part of this contract shall be subcontracted to any person or firm ineligible for award of a Government contract by virtue of section 3(a) of the Davis-Bacon Act or 29 CFR 5.12(a)(1).

(4) The penalty for making false statements is prescribed in the U.S. Criminal Code, 18 U.S.C. 1001.

(End of clause)

52.222-21 PROHIBITION OF SEGREGATED FACILITIES (FEB 1999)

(a) Segregated facilities, as used in this clause, means any waiting rooms, work areas, rest rooms and wash rooms, restaurants and other eating areas, time clocks, locker rooms and other storage or dressing areas, parking lots, drinking fountains, recreation or entertainment areas, transportation, and housing facilities provided for employees, that are segregated by explicit directive or are in fact segregated on the basis of race, color, religion, sex, or national origin because of written or oral policies or employee custom. The term does not include separate or single-user rest rooms or necessary dressing or sleeping areas provided to assure privacy between the sexes.

(b) The Contractor agrees that it does not and will not maintain or provide for its employees any segregated facilities at any of its establishments, and that it does not and will not permit its employees to perform their services at any location under its control where segregated facilities are maintained. The Contractor agrees that a breach of this clause is a violation of the Equal Opportunity clause in this contract.

(c) The Contractor shall include this clause in every subcontract and purchase order that is subject to the Equal Opportunity clause of this contract.

(End of clause)

52.222-23 NOTICE OF REQUIREMENT FOR AFFIRMATIVE ACTION TO ENSURE EQUAL EMPLOYMENT OPPORTUNITY FOR CONSTRUCTION (FEB 1999)

(a) The offeror's attention is called to the Equal Opportunity clause and the Affirmative Action Compliance Requirements for Construction clause of this solicitation.

(b) The goals for minority and female participation, expressed in percentage terms for the Contractor's aggregate workforce in each trade on all construction work in the covered area, are as follows:

Goals for minority participation for each trade	Goals for female participation for each trade

8.7% (Anchorage, Alaska) 15.1% (locations outside of Anchorage, Alaska)	**6.9% (Alaska)**

These goals are applicable to all the Contractor's construction work performed in the covered area. If the Contractor performs construction work in a geographical area located outside of the covered area, the Contractor shall apply the goals established for the geographical area where the work is actually performed. Goals are publis hed periodically in the Federal Register in notice form, and these notices may be obtained from any Office of Federal Contract Compliance Programs office.

(c) The Contractor's compliance with Executive Order 11246, as amended, and the regulations in 41 CFR 60-4 shall be based on (1) its implementation of the Equal Opportunity clause, (2) specific affirmative action obligations required by the clause entitled "Affirmative Action Compliance Requirements for Construction," and (3) its efforts to meet the goals. The hours of minority and female employment and training must be substantially uniform throughout the length of the contract, and in each trade. The Contractor shall make a good faith effort to employ minorities and women evenly on each of its projects. The transfer of minority or female employees or trainees from Contractor to Contractor, or from project to project, for the sole purpose of meeting the Contractor's goals shall be a violation of the contract, Executive Order 11246, as amended, and the regulations in 41 CFR 60-4. Compliance with the goals will be measured against the total work hours performed.

(d) The Contractor shall provide written notification to the Deputy Assistant Secretary for Federal Contract Compliance, U.S. Department of Labor, within 10 working days following award of any construction subcontract in excess of $10,000 at any tier for construction work under the contract resulting from this solicitation. The notification shall list the --

(1) Name, address, and telephone number of the subcontractor;

(2) Employer's identification number of the subcontractor;

(3) Estimated dollar amount of the subcontract;

(4) Estimated starting and completion dates of the subcontract; and

(5) Geographical area in which the subcontract is to be performed.

(e) As used in this Notice, and in any contract resulting from this solicitation, the "covered area" is
[Contracting Officer shall insert description of the geographical areas where the contract is to be performed, giving the State, county, and city].

(End of provision)

52.222-26 EQUAL OPPORTUNITY (APR 2002)

(a) Definition. United States, as used in this clause, means the 50 States, the District of Columbia, Puerto Rico, the Northern Mariana Islands, American Samoa, Guam, the U.S. Virgin Islands, and Wake Island.

(b) If, during any 12-month period (including the 12 months preceding the award of this contract), the Contractor has been or is awarded nonexempt Federal contracts and/or subcontracts that have an aggregate value in excess of $10,000, the Contractor shall comply with paragraphs (b)(1) through (b)(11) of this clause, except for work performed outside the United States by employees who were not recruited within the United States. Upon request, the Contractor shall provide information necessary to determine the applicability of this clause.

(1) The Contractor shall not discriminate against any employee or applicant for employment because of race, color, religion, sex, or national origin. However, it shall not be a violation of this clause for the Contractor to extend a publicly announced preference in employment to Indians living on or near an Indian reservation, in connection with employment opportunities on or near an Indian reservation, as permitted by 41 CFR 60-1.5.

(2) The Contractor shall take affirmative action to ensure that applicants are employed, and that employees are treated during employment, without regard to their race, color, religion, sex, or national origin. This shall include, but not be limited to, (i) employment, (ii) upgrading, (iii) demotion, (iv) transfer, (v) recruitment or recruitment advertising, (vi) layoff or termination, (vii) rates of pay or other forms of compensation, and (viii) selection for training, including apprenticeship.

(3) The Contractor shall post in conspicuous places available to employees and applicants for employment the notices to be provided by the Contracting Officer that explain this clause.

(4) The Contractor shall, in all solicitations or advertisements for employees placed by or on behalf of the Contractor, state that all qualified applicants will receive consideration for employment without regard to race, color, religion, sex, or national origin.

(5) The Contractor shall send, to each labor union or representative of workers with which it has a collective bargaining agreement or other contract or understanding, the notice to be provided by the Contracting Officer advising the labor union or workers' representative of the Contractor's commitments under this clause, and post copies of the notice in conspicuous places available to employees and applicants for employment.

(6) The Contractor shall comply with Executive Order 11246, as amended, and the rules, regulations, and orders of the Secretary of Labor.

(7) The Contractor shall furnish to the contracting agency all information required by Executive Order 11246, as amended, and by the rules, regulations, and orders of the Secretary of Labor. The Contractor shall also file Standard Form 100 (EEO-1), or any successor form, as prescribed in 41 CFR part 60-1. Unless the Contractor has filed within the 12 months preceding the date of contract award, the Contractor shall, within 30 days after contract award, apply to either the regional Office of Federal Contract Compliance Programs (OFCCP) or the local office of the Equal Employment Opportunity Commission for the necessary forms.

(8) The Contractor shall permit access to its premises, during normal business hours, by the contracting agency or the OFCCP for the purpose of conducting on-site compliance evaluations and complaint investigations. The Contractor shall permit the Government to inspect and copy any books, accounts, records (including computerized records), and other material that may be relevant to the matter under investigation and pertinent to compliance with Executive Order 11246, as amended, and rules and regulations that implement the Executive Order.

(9) If the OFCCP determines that the Contractor is not in compliance with this clause or any rule, regulation, or order of the Secretary of Labor, this contract may be canceled, terminated, or suspended in whole or in part and the Contractor may be declared ineligible for further Government contracts, under the procedures authorized in Executive Order 11246, as amended. In addition, sanctions may be imposed and remedies invoked against the Contractor as provided in Executive Order 11246, as amended; in the rules, regulations, and orders of the Secretary of Labor; or as otherwise provided by law.

(10) The Contractor shall include the terms and conditions of subparagraphs (b)(1) through (11) of this clause in every subcontract or purchase order that is not exempted by the rules, regulations, or orders of the Secretary of Labor issued under Executive Order 11246, as amended, so that these terms and conditions will be binding upon each subcontractor or vendor.

(11) The Contractor shall take such action with respect to any subcontract or purchase order as the contracting

officer may direct as a means of enforcing these terms and conditions, including sanctions for noncompliance; provided, that if the Contractor becomes involved in, or is threatened with, litigation with a subcontractor or vendor as a result of any direction, the Contractor may request the United States to enter into the litigation to protect the interests of the United States.

(c) Notwithstanding any other clause in this contract, disputes relative to this clause will be governed by the procedures in 41 CFR 60-1.1.

(End of clause)

52.222-27 AFFIRMATIVE ACTION COMPLIANCE REQUIREMENTS FOR CONSTRUCTION (FEB 1999)

(a) Definitions. "Covered area," as used in this clause, means the geographical area described in the solicitation for this contract.

"Deputy Assistant Secretary," as used in this clause, means Deputy Assistant Secretary for Federal Contract Compliance, U.S. Department of Labor, or a designee.

"Employer's identification number," as used in this clause, means the Federal Social Security number used on the employer's quarterly federal tax return, U.S. Treasury Department Form 941.

"Minority," as used in this clause, means--

(1) American Indian or Alaskan Native (all persons having origins in any of the original peoples of North America and maintaining identifiable tribal affiliations through membership and participation or community identification).

(2) Asian and Pacific Islander (all persons having origins in any of the original peoples of the Far East, Southeast Asia, the Indian Subcontinent, or the Pacific Islands);

(3) Black (all persons having origins in any of the black African racial groups not of Hispanic origin); and

(4) Hispanic (all persons of Mexican, Puerto Rican, Cuban, Central or South American, or other Spanish culture or origin, regardless of race).

(b) If the Contractor, or a subcontractor at any tier, subcontracts a portion of the work involving any construction trade, each such subcontract in excess of $10,000 shall include this clause and the Notice containing the goals for minority and female participation stated in the solicitation for this contract.

(c) If the Contractor is participating in a Hometown Plan (41 CFR 60-4) approved by the U.S. Department of Labor in a covered area, either individually or through an association, its affirmative action obligations on all work in the plan area (including goals) shall comply with the plan for those trades that have unions participating in the plan. Contractors must be able to demonstrate participation in, and compliance with, the provisions of the plan. Each Contractor or subcontractor participating in an approved plan is also required to comply with its obligations under the Equal Opportunity clause, and to make a good faith effort to achieve each goal under the plan in each trade in which it has employees. The overall good-faith performance by other Contractors or subcontractors toward a goal in an approved plan does not excuse any Contractor's or subcontractor's failure to make good-faith efforts to achieve the plan's goals.

(d) The Contractor shall implement the affirmative action procedures in subparagraphs (g)(1) through (16) of this clause. The goals stated in the solicitation for this contract are expressed as percentages of the total hours of employment and training of minority and female utilization that the Contractor should reasonably be able to achieve

in each construction trade in which it has employees in the covered area. If the Contractor performs construction work in a geographical area located outside of the covered area, it shall apply the goals established for the geographical area where that work is actually performed. The Contractor is expected to make substantially uniform progress toward its goals in each craft.

(e) Neither the terms and conditions of any collective bargaining agreement, nor the failure by a union with which the Contractor has a collective bargaining agreement, to refer minorities or women shall excuse the Contractor's obligations under this clause, Executive Order 11246, as amended, or the regulations thereunder.

(f) In order for the nonworking training hours of apprentices and trainees to be counted in meeting the goals, apprentices and trainees must be employed by the Contractor during the training period, and the Contractor must have made a commitment to employ the apprentices and trainees at the completion of their training, subject to the availability of employment opportunities. Trainees must be trained pursuant to training programs approved by the U.S. Department of Labor.

(g) The Contractor shall take affirmative action to ensure equal employment opportunity. The evaluation of the Contractor's compliance with this clause shall be based upon its effort to achieve maximum results from its actions. The Contractor shall document these efforts fully and implement affirmative action steps at least as extensive as the following:

(1) Ensure a working environment free of harassment, intimidation, and coercion at all sites and in all facilities where the Contractor's employees are assigned to work. The Contractor, if possible, will assign two or more women to each construction project. The Contractor shall ensure that foremen, superintendents, and other onsite supervisory personnel are aware of and carry out the Contractor's obligation to maintain such a working environment, with specific attention to minority or female individuals working at these sites or facilities.

(2) Establish and maintain a current list of sources for minority and female recruitment. Provide written notification to minority and female recruitment sources and community organizations when the Contractor or its unions have employment opportunities available, and maintain a record of the organizations' responses.

(3) Establish and maintain a current file of the names, addresses, and telephone numbers of each minority and female off-the-street applicant, referrals of minorities or females from unions, recruitment sources, or community organizations, and the action taken with respect to each individual. If an individual was sent to the union hiring hall for referral and not referred back to the Contractor by the union or, if referred back, not employed by the Contractor, this shall be documented in the file, along with whatever additional actions the Contractor may have taken.

(4) Immediately notify the Deputy Assistant Secretary when the union or unions with which the Contractor has a collective bargaining agreement has not referred back to the Contractor a minority or woman sent by the Contractor, or when the Contractor has other information that the union referral process has impeded the Contractor's efforts to meet its obligations.

(5) Develop on-the-job training opportunities and/or participate in training programs for the area that expressly include minorities and women, including upgrading programs and apprenticeship and trainee programs relevant to the Contractor's employment needs, especially those programs funded or approved by the Department of Labor. The Contractor shall provide notice of these programs to the sources compiled under subparagraph (g)(2) of this clause.

(6) Disseminate the Contractor's equal employment policy by--

(i) Providing notice of the policy to unions and to training, recruitment, and outreach programs, and requesting their cooperation in assisting the Contractor in meeting its contract obligations;

(ii) Including the policy in any policy manual and in collective bargaining agreements;

(iii) Publicizing the policy in the company newspaper, annual report, etc.;

(iv) Reviewing the policy with all management personnel and with all minority and female employees at least once a year; and

(v) Posting the policy on bulletin boards accessible to employees at each location where construction work is performed.

(7) Review, at least annually, the Contractor's equal employment policy and affirmative action obligations with all employees having responsibility for hiring, assignment, layoff, termination, or other employment decisions. Conduct review of this policy with all on-site supervisory personnel before initiating construction work at a job site. A written record shall be made and maintained identifying the time and place of these meetings, persons attending, subject matter discussed, and disposition of the subject matter.

(8) Disseminate the Contractor's equal employment policy externally by including it in any advertising in the news media, specifically including minority and female news media. Provide written notification to, and discuss this policy with, other Contractors and subcontractors with which the Contractor does or anticipates doing business.

(9) Direct recruitment efforts, both oral and written, to minority, female, and community organizations, to schools with minority and female students, and to minority and female recruitment and training organizations serving the Contractor's recruitment area and employment needs. Not later than 1 month before the date for acceptance of applications for apprenticeship or training by any recruitment source, send written notification to organizations such as the above, describing the openings, screening procedures, and tests to be used in the selection process.

(10) Encourage present minority and female employees to recruit minority persons and women. Where reasonable, provide after-school, summer, and vacation employment to minority and female youth both on the site and in other areas of the Contractor's workforce.

(11) Validate all tests and other selection requirements where required under 41 CFR 60-3.

(12) Conduct, at least annually, an inventory and evaluation at least of all minority and female personnel for promotional opportunities. Encourage these employees to seek or to prepare for, through appropriate training, etc., opportunities for promotion.

(13) Ensure that seniority practices, job classifications, work assignments, and other personnel practices do not have a discriminatory effect by continually monitoring all personnel and employment-related activities to ensure that the Contractor's obligations under this contract are being carried out.

(14) Ensure that all facilities and company activities are nonsegregated except that separate or single-user rest rooms and necessary dressing or sleeping areas shall be provided to assure privacy between the sexes.

(15) Maintain a record of solicitations for subcontracts for minority and female construction contractors and suppliers, including circulation of solicitations to minority and female contractor associations and other business associations.

(16) Conduct a review, at least annually, of all supervisors' adherence to and performance under the Contractor's equal employment policy and affirmative action obligations.

(h) The Contractor is encouraged to participate in voluntary associations that may assist in fulfilling one or more of the affirmative action obligations contained in subparagraphs (g)(1) through (16) of this clause. The efforts of a contractor association, joint contractor-union, contractor-community, or similar group of which the contractor is a member and participant may be asserted as fulfilling one or more of its obligations under subparagraphs (g)(1)

through (16) of this clause, provided the Contractor--

(1) Actively participates in the group;

(2) Makes every effort to ensure that the group has a positive impact on the employment of minorities and women in the industry;

(3) Ensures that concrete benefits of the program are reflected in the Contractor's minority and female workforce participation;

(4) Makes a good-faith effort to meet its individual goals and timetables; and

(5) Can provide access to documentation that demonstrates the effectiveness of actions taken on behalf of the Contractor. The obligation to comply is the Contractor's, and failure of such a group to fulfill an obligation shall not be a defense for the Contractor's noncompliance.

(i) A single goal for minorities and a separate single goal for women shall be established. The Contractor is required to provide equal employment opportunity and to take affirmative action for all minority groups, both male and female, and all women, both minority and nonminority. Consequently, the Contractor may be in violation of Executive Order 11246, as amended, if a particular group is employed in a substantially disparate manner.

(j) The Contractor shall not use goals or affirmative action standards to discriminate against any person because of race, color, religion, sex, or national origin.

(k) The Contractor shall not enter into any subcontract with any person or firm debarred from Government contracts under Executive Order 11246, as amended.

(l) The Contractor shall carry out such sanctions and penalties for violation of this clause and of the Equal Opportunity clause, including suspension, termination, and cancellation of existing subcontracts, as may be imposed or ordered under Executive Order 11246, as amended, and its implementing regulations, by the OFCCP. Any failure to carry out these sanctions and penalties as ordered shall be a violation of this clause and Executive Order 11246, as amended.

(m) The Contractor in fulfilling its obligations under this clause shall implement affirmative action procedures at least as extensive as those prescribed in paragraph (g) of this clause, so as to achieve maximum results from its efforts to ensure equal employment opportunity. If the Contractor fails to comply with the requirements of Executive Order 11246, as amended, the implementing regulations, or this clause, the Deputy Assistant Secretary shall take action as prescribed in 41 CFR 60-4.8.

(n) The Contractor shall designate a responsible official to--

(1) Monitor all employment-related activity to ensure that the Contractor's equal employment policy is being carried out;

(2) Submit reports as may be required by the Government; and

(3) Keep records that shall at least include for each employee the name, address, telephone number, construction trade, union affiliation (if any), employee identification number, social security number, race, sex, status (e.g., mechanic, apprentice, trainee, helper, or laborer), dates of changes in status, hours worked per week in the indicated trade, rate of pay, and locations at which the work was performed. Records shall be maintained in an easily understandable and retrievable form; however, to the degree that existing records satisfy this requirement, separate records are not required to be maintained.

Nothing contained herein shall be construed as a limitation upon the application of other laws that establish different standards of compliance or upon the requirements for the hiring of local or other area residents (e.g., those under the Public Works Employment Act of 1977 and the Community Development Block Grant Program).

(End of clause)

52.222-35 EQUAL OPPORTUNITY FOR SPECIAL DISABLED VETERANS, VETERANS OF THE VIETNAM ERA, AND OTHER ELIGIBLE VETERANS (DEC 2001)

(a) Definitions. As used in this clause--

All employment openings means all positions except executive and top management, those positions that will be filled from within the Contractor's organization, and positions lasting 3 days or less. This term includes full-time employment, temporary employment of more than 3 days duration, and part-time employment.

Executive and top management means any employee--

(1) Whose primary duty consists of the management of the enterprise in which the individual is employed or of a customarily recognized department or subdivision thereof;

(2) Who customarily and regularly directs the work of two or more other employees;

(3) Who has the authority to hire or fire other employees or whose suggestions and recommendations as to the hiring or firing and as to the advancement and promotion or any other change of status of other employees will be given particular weight;

(4) Who customarily and regularly exercises discretionary powers; and

(5) Who does not devote more than 20 percent or, in the case of an employee of a retail or service establishment, who does not devote more than 40 percent of total hours of work in the work week to activities that are not directly and closely related to the performance of the work described in paragraphs (1) through (4) of this definition. This paragraph (5) does not apply in the case of an employee who is in sole charge of an establishment or a physically separated branch establishment, or who owns at least a 20 percent interest in the enterprise in which the individual is employed.

Other eligible veteran means any other veteran who served on active duty during a war or in a campaign or expedition for which a campaign badge has been authorized.

Positions that will be filled from within the Contractor's organization means employment openings for which the Contractor will give no consideration to persons outside the Contractor's organization (including any affiliates, subsidiaries, and parent companies) and includes any openings the Contractor proposes to fill from regularly established “recall” lists. The exception does not apply to a particular opening once an employer decides to consider applicants outside of its organization.

Qualified special disabled veteran means a special disabled veteran who satisfies the requisite skill, experience, education, and other job-related requirements of the employment position such veteran holds or desires, and who, with or without reasonable accommodation, can perform the essential functions of such position.

Special disabled veteran means--

(1) A veteran who is entitled to compensation (or who but for the receipt of military retired pay would be entitled to compensation) under laws administered by the Department of Veterans Affairs for a disability--

(i) Rated at 30 percent or more; or

(ii) Rated at 10 or 20 percent in the case of a veteran who has been determined under 38 U.S.C. 3106 to have a serious employment handicap (i.e., a significant impairment of the veteran's ability to prepare for, obtain, or retain employment consistent with the veteran's abilities, aptitudes, and interests); or

(2) A person who was discharged or released from active duty because of a service-connected disability.

Veteran of the Vietnam era means a person who--

(1) Served on active duty for a period of more than 180 days and was discharged or released from active duty with other than a dishonorable discharge, if any part of such active duty occurred--

(i) In the Republic of Vietnam between February 28, 1961, and May 7, 1975; or

(ii) Between August 5, 1964, and May 7, 1975, in all other cases; or

(2) Was discharged or released from active duty for a service-connected disability if any part of the active duty was performed--

(i) In the Republic of Vietnam between February 28, 1961, and May 7, 1975; or

(ii) Between August 5, 1964, and May 7, 1975, in all other cases.
(b) General. (1) The Contractor shall not discriminate against the individual because the individual is a special disabled veteran, a veteran of the Vietnam era, or other eligible veteran, regarding any position for which the employee or applicant for employment is qualified. The Contractor shall take affirmative action to employ, advance in employment, and otherwise treat qualified special disabled veterans, veterans of the Vietnam era, and other eligible veterans without discrimination based upon their disability or veterans' status in all employment practices such as--

(i) Recruitment, advertising, and job application procedures;

(ii) Hiring, upgrading, promotion, award of tenure, demotion, transfer, layoff, termination, right of return from layoff and rehiring;

(iii) Rate of pay or any other form of compensation and changes in compensation;

(iv) Job assignments, job classifications, organizational structures, position descriptions, lines of progression, and seniority lists;

(v) Leaves of absence, sick leave, or any other leave;

(vi) Fringe benefits available by virtue of employment, whether or not administered by the Contractor;

(vii) Selection and financial support for training, including apprenticeship, and on-the-job training under 38 U.S.C. 3687, professional meetings, conferences, and other related activities, and selection for leaves of absence to pursue training;

(viii) Activities sponsored by the Contractor including social or recreational programs; and

(ix) Any other term, condition, or privilege of employment.

(2) The Contractor shall comply with the rules, regulations, and relevant orders of the Secretary of Labor issued under the Vietnam Era Veterans' Readjustment Assistance Act of 1972 (the Act), as amended (38 U.S.C. 4211 and 4212).

(c) Listing openings. (1) The Contractor shall immediately list all employment openings that exist at the time of the execution of this contract and those which occur during the performance of this contract, including those not generated by this contract, and including those occurring at an establishment of the Contractor other than the one where the contract is being performed, but excluding those of independently operated corporate affiliates, at an appropriate local public employment service office of the State wherein the opening occurs. Listing employment openings with the U.S. Department of Labor's America's Job Bank shall satisfy the requirement to list jobs with the local employment service office.

(2) The Contractor shall make the listing of employment openings with the local employment service office at least concurrently with using any other recruitment source or effort and shall involve the normal obligations of placing a bona fide job order, including accepting referrals of veterans and nonveterans. This listing of employment openings does not require hiring any particular job applicant or hiring from any particular group of job applicants and is not intended to relieve the Contractor from any requirements of Executive orders or regulations concerning nondiscrimination in employment.

(3) Whenever the Contractor becomes contractually bound to the listing terms of this clause, it shall advise the State public employment agency in each State where it has establishments of the name and location of each hiring location in the State. As long as the Contractor is contractually bound to these terms and has so advised the State agency, it need not advise the State agency of subsequent contracts. The Contractor may advise the State agency when it is no longer bound by this contract clause.

(d) Applicability. This clause does not apply to the listing of employment openings that occur and are filled outside the 50 States, the District of Columbia, the Commonwealth of Puerto Rico, the Commonwealth of the Northern Mariana Islands, American Samoa, Guam, the Virgin Islands of the United States, and Wake Island.

(e) Postings. (1) The Contractor shall post employment notices in conspicuous places that are available to employees and applicants for employment.

(2) The employment notices shall--

(i) State the rights of applicants and employees as well as the Contractor's obligation under the law to take affirmative action to employ and advance in employment qualified employees and applicants who are special disabled veterans, veterans of the Vietnam era, and other eligible veterans; and

(ii) Be in a form prescribed by the Deputy Assistant Secretary for Federal Contract Compliance Programs, Department of Labor (Deputy Assistant Secretary of Labor), and provided by or through the Contracting Officer.

(3) The Contractor shall ensure that applicants or employees who are special disabled veterans are informed of the contents of the notice (e.g., the Contractor may have the notice read to a visually disabled veteran, or may lower the posted notice so that it can be read by a person in a wheelchair).

(4) The Contractor shall notify each labor union or representative of workers with which it has a collective bargaining agreement, or other contract understanding, that the Contractor is bound by the terms of the Act and is committed to take affirmative action to employ, and advance in employment, qualified special disabled veterans, veterans of the Vietnam era, and other eligible veterans.

(f) Noncompliance. If the Contractor does not comply with the requirements of this clause, the Government may take appropriate actions under the rules, regulations, and relevant orders of the Secretary of Labor issued pursuant to the Act.

(g) Subcontracts. The Contractor shall insert the terms of this clause in all subcontracts or purchase orders of $25,000 or more unless exempted by rules, regulations, or orders of the Secretary of Labor. The Contractor shall act as specified by the Deputy Assistant Secretary of Labor to enforce the terms, including action for noncompliance.

(End of clause)

52.222-36 AFFIRMATIVE ACTION FOR WORKERS WITH DISABILITIES (JUN 1998)

(a) General. (1) Regarding any position for which the employee or applicant for employment is qualified, the Contractor shall not discriminate against any employee or applicant because of physical or mental disability. The Contractor agrees to take affirmative action to employ, advance in employment, and otherwise treat qualified individuals with disabilities without discrimination based upon their physical or mental disability in all employment practices such as--

(i) Recruitment, advertising, and job application procedures;

(ii) Hiring, upgrading, promotion, award of tenure, demotion, transfer, layoff, termination, right of return from layoff, and rehiring;

(iii) Rates of pay or any other form of compensation and changes in compensation;

(iv) Job assignments, job classifications, organizational structures, position descriptions, lines of progression, and seniority lists;

(v) Leaves of absence, sick leave, or any other leave;

(vi) Fringe benefits available by virtue of employment, whether or not administered by the Contractor;

(vii) Selection and financial support for training, including apprenticeships, professional meetings, conferences, and other related activities, and selection for leaves of absence to pursue training;

(viii) Activities sponsored by the Contractor, including social or recreational programs; and

(ix) Any other term, condition, or privilege of employment.

(2) The Contractor agrees to comply with the rules, regulations, and relevant orders of the Secretary of Labor (Secretary) issued under the Rehabilitation Act of 1973 (29 U.S.C. 793) (the Act), as amended.

(b) Postings. (1) The Contractor agrees to post employment notices stating--

(i) The Contractor's obligation under the law to take affirmative action to employ and advance in employment qualified individuals with disabilities; and

(ii) The rights of applicants and employees.

(2) These notices shall be posted in conspicuous places that are available to employees and applicants for employment. The Contractor shall ensure that applicants and employees with disabilities are informed of the contents

of the notice (e.g., the Contractor may have the notice read to a visually disabled individual, or may lower the posted notice so that it might be read by a person in a wheelchair). The notices shall be in a form prescribed by the Deputy Assistant Secretary for Federal Contract Compliance of the U.S. Department of Labor (Deputy Assistant Secretary) and shall be provided by or through the Contracting Officer.

(3) The Contractor shall notify each labor union or representative of workers with which it has a collective bargaining agreement or other contract understanding, that the Contractor is bound by the terms of Section 503 of the Act and is committed to take affirmative action to employ, and advance in employment, qualified individuals with physical or mental disabilities.

(c) Noncompliance. If the Contractor does not comply with the requirements of this clause, appropriate actions may be taken under the rules, regulations, and relevant orders of the Secretary issued pursuant to the Act.

(d) Subcontracts. The Contractor shall include the terms of this clause in every subcontract or purchase order in excess of $10,000 unless exempted by rules, regulations, or orders of the Secretary. The Contractor shall act as specified by the Deputy Assistant Secretary to enforce the terms, including action for noncompliance.

(End of clause)

52.222-37 EMPLOYMENT REPORTS ON SPECIAL DISABLED VETERANS, VETERANS OF THE VIETNAM ERA, AND OTHER ELIGIBLE VETERANS (DEC 2001)

(a) Unless the Contractor is a State or local government agency, the Contractor shall report at least annually, as required by the Secretary of Labor, on--

(1) The number of disabled veterans and the number of veterans of the Vietnam era in the workforce of the contractor by job category and hiring location; and

(2) The total number of new employees hired during the period covered by the report, and of that total, the number of disabled veterans, and the number of veterans of the Vietnam era.

(b) The above items shall be reported by completing the form entitled "Federal Contractor Veterans' Employment Report VETS-100."

(c) Reports shall be submitted no later than September 30 of each year beginning September 30, 1988.

(d) The employment activity report required by paragraph (a)(2) of this clause shall reflect total hires during the most recent 12-month period as of the ending date selected for the employment profile report required by paragraph (a)(1) of this clause. Contractors may select an ending date: (1) As of the end of any pay period during the period January through March 1st of the year the report is due, or (2) as of December 31, if the contractor has previous written approval from the Equal Employment Opportunity Commission to do so for purposes of submitting the Employer Information Report EEO-1 (Standard Form 100).

(e) The count of veterans reported according to paragraph (a) of this clause shall be based on voluntary disclosure. Each Contractor subject to the reporting requirements at 38 U.S.C. 4212 shall invite all disabled veterans and veterans of the Vietnam era who wish to benefit under the affirmative action program at 38 U.S.C. 4212 to identify themselves to the Contractor. The invitation shall state that the information is voluntarily provided; that the information will be kept confidential; that disclosure or refusal to provide the information will not subject the applicant or employee to any adverse treatment; and that the information will be used only in accordance with the regulations promulgated under 38 U.S.C. 4212.

(f) Subcontracts. The Contractor shall include the terms of this clause in every subcontract or purchase order of $10,000 or more unless exempted by rules, regulations, or orders of the Secretary.

(End of clause)

52.223-3 HAZARDOUS MATERIAL IDENTIFICATION AND MATERIAL SAFETY DATA (JAN 1997)

(a) "Hazardous material", as used in this clause, includes any material defined as hazardous under the latest version of Federal Standard No. 313 (including revisions adopted during the term of the contract).

(b) The offeror must list any hazardous material, as defined in paragraph (a) of this clause, to be delivered under this contract. The hazardous material shall be properly identified and include any applicable identification number, such as National Stock Number or Special Item Number. This information shall also be included on the Material Safety Data Sheet submitted under this contract.

Material (If none, insert "None")	Identification No.
_____	_____
_____	_____
_____	_____

(c) This list must be updated during performance of the contract whenever the Contractor determines that any other material to be delivered under this contract is hazardous.

(d) The apparently successful offeror agrees to submit, for each item as required prior to award, a Material Safety Data Sheet, meeting the requirements of 29 CFR 1910.1200(g) and the latest version of Federal Standard No. 313, for all hazardous material identified in paragraph (b) of this clause. Data shall be submitted in accordance with Federal Standard No. 313, whether or not the apparently successful offeror is the actual manufacturer of these items. Failure to submit the Material Safety Data Sheet prior to award may result in the apparently successful offeror being considered nonresponsible and ineligible for award.

(e) If, after award, there is a change in the composition of the item(s) or a revision to Federal Standard No. 313, which renders incomplete or inaccurate the data submitted under paragraph (d) of this clause, the Contractor shall promptly notify the Contracting Officer and resubmit the data.

(f) Neither the requirements of this clause nor any act or failure to act by the Government shall relieve the Contractor of any responsibility or liability for the safety of Government, Contractor, or subcontractor personnel or property.

(g) Nothing contained in this clause shall relieve the Contractor from complying with applicable Federal, State, and local laws, codes, ordinances, and regulations (including the obtaining of licenses and permits) in connection with hazardous material.

(h) The Government's rights in data furnished under this contract with respect to hazardous material are as follows:

(1) To use, duplicate and disclose any data to which this clause is applicable. The purposes of this right are to--

(i) Apprise personnel of the hazards to which they may be exposed in using, handling, packaging, transporting, or

disposing of hazardous materials;

(ii) Obtain medical treatment for those affected by the material; and

(iii) Have others use, duplicate, and disclose the data for the Government for these purposes.

(2) To use, duplicate, and disclose data furnished under this clause, in accordance with subparagraph (h)(1) of this clause, in precedence over any other clause of this contract providing for rights in data.

(3) The Government is not precluded from using similar or identical data acquired from other sources.

(End of clause)

52.223-5 POLLUTION PREVENTION AND RIGHT-TO-KNOW INFORMATION (AUG 2003)

(a) Definitions. As used in this clause--

Priority chemical means a chemical identified by the Interagency Environmental Leadership Workgroup or, alternatively, by an agency pursuant to section 503 of Executive Order 13148 of April 21, 2000, Greening the Government through Leadership in Environmental Management.

“Toxic chemical means a chemical or chemical category listed in 40 CFR 372.65.”

(b) Executive Order 13148 requires Federal facilities to comply with the provisions of the Emergency Planning and Community Right-to-Know Act of 1986 (EPCRA) (42 U.S.C. 11001-11050) and the Pollution Prevention Act of 1990 (PPA) (42 U.S.C. 13101-13109).

(c) The Contractor shall provide all information needed by the Federal facility to comply with the following:

(1) The emergency planning reporting requirements of section 302 of EPCRA.

(2) The emergency notice requirements of section 304 of EPCRA.

(3) The list of Material Safety Data Sheets, required by section 311 of EPCRA.

(4) The emergency and hazardous chemical inventory forms of section 312 of EPCRA.

(5) The toxic chemical release inventory of section 313 of EPCRA, which includes the reduction and recycling information required by section 6607 of PPA.

(6) The toxic chemical, priority chemical, and hazardous substance release and use reduction goals of sections 502 and 503 of Executive Order 13148.

(End of clause)

52.223-6 DRUG-FREE WORKPLACE (MAY 2001)

(a) Definitions. As used in this clause --

"Controlled substance" means a controlled substance in schedules I through V of section 202 of the Controlled

Substances Act (21 U.S.C. 812) and as further defined in regulation at 21 CFR 1308.11 - 1308.15.

"Conviction" means a finding of guilt (including a plea of nolo contendere) or imposition of sentence, or both, by any judicial body charged with the responsibility to deter- mine violations of the Federal or State criminal drug statutes.

"Criminal drug statute" means a Federal or non-Federal criminal statute involving the manufacture, distribution, dispensing, possession, or use of any controlled substance.

"Drug-free workplace" means the site(s) for the performance of work done by the Contractor in connection with a specific contract at which employees of the Contractor are prohibited from engaging in the unlawful manufacture, distribution, dispensing, possession, or use of a controlled substance.

"Employee" means an employee of a Contractor directly engaged in the performance of work under a Government contract. "Directly engaged" is defined to include all direct cost employees and any other Contractor employee who has other than a minimal impact or involvement in contract performance.

"Individual" means an offeror/contractor that has no more than one employee including the offeror/contractor.

(b) The Contractor, if other than an individual, shall-- within 30 days after award (unless a longer period is agreed to in writing for contracts of 30 days or more performance duration), or as soon as possible for contracts of less than 30 days performance duration--

(1) Publish a statement notifying its employees that the unlawful manufacture, distribution, dispensing, possession, or use of a controlled substance is prohibited in the Contractor's workplace and specifying the actions that will be taken against employees for violations of such prohibition;

(2) Establish an ongoing drug-free awareness program to inform such employees about--

(i) The dangers of drug abuse in the workplace;

(ii) The Contractor's policy of maintaining a drug-free workplace;

(iii) Any available drug counseling, rehabilitation, and employee assistance programs; and

(iv) The penalties that may be imposed upon employees for drug abuse violations occurring in the workplace;

(3) Provide all employees engaged in performance of the contract with a copy of the statement required by subparagraph (b)(1) of this clause;

(4) Notify such employees in writing in the statement required by subparagraph (b)(1) of this clause that, as a condition of continued employment on this contract, the employee will--

(i) Abide by the terms of the statement; and

(ii) Notify the employer in writing of the employee's conviction under a criminal drug statute for a violation occurring in the workplace no later than 5 days after such conviction.

(5) Notify the Contracting Officer in writing within 10 days after receiving notice under subdivision (b)(4)(ii) of this clause, from an employee or otherwise receiving actual notice of such conviction. The notice shall include the position title of the employee;

(6) Within 30 days after receiving notice under subdivision (b)(4)(ii) of this clause of a conviction, take one of the following actions with respect to any employee who is convicted of a drug abuse violation occurring in the

workplace:

(i) Taking appropriate personnel action against such employee, up to and including termination; or

(ii) Require such employee to satisfactorily participate in a drug abuse assistance or rehabilitation program approved for such purposes by a Federal, State, or local health, law enforcement, or other appropriate agency; and

(7) Make a good faith effort to maintain a drug-free workplace through implementation of subparagraphs (b)(1) though (b)(6) of this clause.

(c) The Contractor, if an individual, agrees by award of the contract or acceptance of a purchase order, not to engage in the unlawful manufacture, distribution, dispensing, possession, or use of a controlled substance while performing this contract.

(d) In addition to other remedies available to the Government, the Contractor's failure to comply with the requirements of paragraph (b) or (c) of this clause may, pursuant to FAR 23.506, render the Contractor subject to suspension of contract payments, termination of the contract for default, and suspension or debarment.

(End of clause)

52.223-9 ESTIMATE OF PERCENTAGE OF RECOVERED MATERIAL CONTENT FOR EPA-DESIGNATED PRODUCTS (AUG 2000)

(a) Definitions. As used in this clause--

Postconsumer material means a material or finished product that has served its intended use and has been discarded for disposal or recovery, having completed its life as a consumer item. Postconsumer material is a part of the broader category of “recovered material.”

Recovered material means waste materials and by-products recovered or diverted from solid waste, but the term does not include those materials and by-products generated from, and commonly reused within, an original manufacturing process.

(b) The Contractor, on completion of this contract, shall--

(1) Estimate the percentage of the total recovered material used in contract performance, including, if applicable, the percentage of postconsumer material content; and

(2) Submit this estimate to **Rose N.S. Olds, Contracting Office, U.S. Army Corps of Engineers, Seattle District.**

(End of clause)

52.223-14 TOXIC CHEMICAL RELEASE REPORTING (AUG 2003)

(a) Unless otherwise exempt, the Contractor, as owner or operator of a facility used in the performance of this contract, shall file by July 1 for the prior calendar year an annual Toxic Chemical Release Inventory Form (Form R) as described in sections 313(a) and (g) of the Emergency Planning and Community Right-to-Know Act of 1986 (EPCRA) (42 U.S.C. 11023(a) and (g)), and section 6607 of the Pollution Prevention Act of 1990 (PPA) (42 U.S.C. 13106). The Contractor shall file, for each facility subject to the Form R filing and reporting requirements, the annual Form R throughout the life of the contract.

(b) A Contractor-owned or -operated facility used in the performance of this contract is exempt from the requirement to file an annual Form R if--

(1) The facility does not manufacture, process, or otherwise use any toxic chemicals listed in 40 CFR 372.65;

(2) The facility does not have 10 or more full-time employees as specified in section 313(b)(1)(A) of EPCRA, 42 U.S.C. 11023(b)(1)(A);

(3) The facility does not meet the reporting thresholds of toxic chemicals established under of EPCRA, 42 U.S.C. 11023(f) (including the alternate thresholds at 40 CFR 372.27, provided an appropriate certification form has been filed with EPA);

(4) The facility does not fall within the following Standard Industrial Classification (SIC) codes or their corresponding North American Industry Classification System sectors:

(i) Major group code 10 (except 1011, 1081, and 1094.

(ii) Major group code 12 (except 1241).

(iii) Major group codes 20 through 39.

(iv) Industry code 4911, 4931, or 4939 (limited to facilities that combust coal and/or oil for the purpose of generating power for distribution in commerce).

(v) Industry code 4953 (limited to facilities regulated under the Resource Conservation and Recovery Act, Subtitle C (42 U.S.C. 6921, et seq.)), 5169, 5171, or 7389 (limited to facilities primarily engaged in solvent recovery services on a contract or fee basis); or

(5) The facility is not located in the United States or its outlying areas.

(c) If the Contractor has certified to an exemption in accordance with one or more of the criteria in paragraph (b) of this clause, and after award of the contract circumstances change so that any of its owned or operated facilities used in the performance of this contract is no longer exempt--

(1) The Contractor shall notify the Contracting Officer; and

(2) The Contractor, as owner or operator of a facility used in the performance of this contract that is no longer exempt, shall (i) submit a Toxic Chemical Release Inventory Form (Form R) on or before July 1 for the prior calendar year during which the facility becomes eligible; and (ii) continue to file the annual Form R for the life of the contract for such facility.

(d) The Contracting Officer may terminate this contract or take other action as appropriate, if the Contractor fails to comply accurately and fully with the EPCRA and PPA toxic chemical release filing and reporting requirements.

(e) Except for acquisitions of commercial items, as defined in FAR Part 2, the Contractor shall--

(1) For competitive subcontracts expected to exceed $100,000 (including all options), include a solicitation provision substantially the same as the provision at FAR 52.223-13, Certification of Toxic Chemical Release Reporting; and

(2) Include in any resultant subcontract exceeding $100,000 (including all options), the substance of this clause, except this paragraph (e).

(End of clause)

52.224-1 PRIVACY ACT NOTIFICATION (APR 1984)

The Contractor will be required to design, develop, or operate a system of records on individuals, to accomplish an agency function subject to the Privacy Act of 1974, Public Law 93-579, December 31, 1974 (5 U.S.C. 552a) and applicable agency regulations. Violation of the Act may involve the imposition of criminal penalties.

(End of clause)

52.224-2 PRIVACY ACT (APR 1984)

(a) The Contractor agrees to--

(1) Comply with the Privacy Act of 1974 (the Act) and the agency rules and regulations issued under the Act in the design, development, or operation of any system of records on individuals to accomplish an agency function when the contract specifically identifies--

(i) The systems of records; and

(ii) The design, development, or operation work that the contractor is to perform;

(2) Include the Privacy Act notification contained in this contract in every solicitation and resulting subcontract and in every subcontract awarded without a solicitation, when the work statement in the proposed subcontract requires the redesign, development, or operation of a system of records on individuals that is subject to the Act; and

(3) Include this clause, including this subparagraph (3), in all subcontracts awarded under this contract which requires the design, development, or operation of such a system of records.

(b) In the event of violations of the Act, a civil action may be brought against the agency involved when the violation concerns the design, development, or operation of a system of records on individuals to accomplish an agency function, and criminal penalties may be imposed upon the officers or employees of the agency when the violation concerns the operation of a system of records on individuals to accomplish an agency function. For purposes of the Act, when the contract is for the operation of a system of records on individuals to accomplish an agency function, the Contractor is considered to be an employee of the agency.

(c)(1) "Operation of a system of records," as used in this clause, means performance of any of the activities associated with maintaining the system of records, including the collection, use, and dissemination of records.

(2) "Record," as used in this clause, means any item, collection, or grouping of information about an individual that is maintained by an agency, including, but not limited to, education, financial transactions, medical history, and criminal or employment history and that contains the person's name, or the identifying number, symbol, or other identifying particular assigned to the individual, such as a fingerprint or voiceprint or a photograph.

(3) "System of records on individuals," as used in this clause, means a group of any records under the control of any agency from which information is retrieved by the name of the individual or by some identifying number, symbol, or other identifying particular assigned to the individual.

(End of clause)

52.225-9 BUY AMERICAN ACT—CONSTRUCTION MATERIALS (JUN 2003)

(a) Definitions. As used in this clause--

Component means an article, material, or supply incorporated directly into a construction material.

Construction material means an article, material, or supply brought to the construction site by the Contractor or a subcontractor for incorporation into the building or work. The term also includes an item brought to the site preassembled from articles, materials, or supplies. However, emergency life safety systems, such as emergency lighting, fire alarm, and audio evacuation systems, that are discrete systems incorporated into a public building or work and that are produced as complete systems, are evaluated as a single and distinct construction material regardless of when or how the individual parts or components of those systems are delivered to the construction site. Materials purchased directly by the Government are supplies, not construction material.

Cost of components means--

(1) For components purchased by the Contractor, the acquisition cost, including transportation costs to the place of incorporation into the construction material (whether or not such costs are paid to a domestic firm), and any applicable duty (whether or not a duty-free entry certificate is issued); or

(2) For components manufactured by the Contractor, all costs associated with the manufacture of the component, including transportation costs as described in paragraph (1) of this definition, plus allocable overhead costs, but excluding profit. Cost of components does not include any costs associated with the manufacture of the end product.

Domestic construction material means--

(1) An unmanufactured construction material mined or produced in the United States; or

(2) A construction material manufactured in the United States, if the cost of its components mined, produced, or manufactured in the United States exceeds 50 percent of the cost of all its components. Components of foreign origin of the same class or kind for which nonavailability determinations have been made are treated as domestic.

Foreign construction material means a construction material other than a domestic construction material.

United States means the 50 States, the District of Columbia, and outlying areas.

(b) Domestic preference. (1) This clause implements the Buy American Act (41 U.S.C. 10a-10d) by providing a preference for domestic construction material. The Contractor shall use only domestic construction material in performing this contract, except as provided in paragraphs (b)(2) and (b)(3) of this clause.

(2) This requirement does not apply to the construction material or components listed by the Government as follows: [Contracting Officer to list applicable excepted materials or indicate “none”]

(3) The Contracting Officer may add other foreign construction material to the list in paragraph (b)(2) of this clause if the Government determines that

(i) The cost of domestic construction material would be unreasonable. The cost of a particular domestic construction material subject to the requirements of the Buy American Act is unreasonable when the cost of such material exceeds the cost of foreign material by more than 6 percent;

(ii) The application of the restriction of the Buy American Act to a particular construction material would be impracticable or inconsistent with the public interest; or

(iii) The construction material is not mined, produced, or manufactured in the United States in sufficient and reasonably available commercial quantities of a satisfactory quality.

(c) Request for determination of inapplicability of the Buy American Act. (1)(i) Any Contractor request to use foreign construction material in accordance with paragraph (b)(3) of this clause shall include adequate information for Government evaluation of the request, including--

(A) A description of the foreign and domestic construction materials;

(B) Unit of measure;

(C) Quantity;

(D) Price;

(E) Time of delivery or availability;

(F) Location of the construction project;

(G) Name and address of the proposed supplier; and

(H) A detailed justification of the reason for use of foreign construction materials cited in accordance with paragraph (b)(3) of this clause.

(ii) A request based on unreasonable cost shall include a reasonable survey of the market and a completed price comparison table in the format in paragraph (d) of this clause.

(iii) The price of construction material shall include all delivery costs to the construction site and any applicable duty (whether or not a duty-free certificate may be issued).

(iv) Any Contractor request for a determination submitted after contract award shall explain why the Contractor could not reasonably foresee the need for such determination and could not have requested the determination before contract award. If the Contractor does not submit a satisfactory explanation, the Contracting Officer need not make a determination.

(2) If the Government determines after contract award that an exception to the Buy American Act applies and the Contracting Officer and the Contractor negotiate adequate consideration, the Contracting Officer will modify the contract to allow use of the foreign construction material. However, when the basis for the exception is the unreasonable price of a domestic construction material, adequate consideration is not less than the differential established in paragraph (b)(3)(i) of this clause.

(3) Unless the Government determines that an exception to the Buy American Act applies, use of foreign construction material is noncompliant with the Buy American Act.

(d) Data. To permit evaluation of requests under paragraph (c) of this clause based on unreasonable cost, the Contractor shall include the following information and any applicable supporting data based on the survey of suppliers:

Foreign and Domestic Construction Materials Price Comparison

Construction material description	Unit of measure	Quantity	Price (dollars) \1\
Item 1			
Foreign construction material....	.....	.....	.....
Domestic construction material...	.....	.....	.....
Item 2			
Foreign construction material....	.....	.....	.....
Domestic construction material...	.....	.....	.....

Include all delivery costs to the construction site and any applicable duty (whether or not a duty-free entry certificate is issued).
List name, address, telephone number, and contact for suppliers surveyed. Attach copy of response; if oral, attach summary.
Include other applicable supporting information.

(End of clause)

52.225-10 NOTICE OF BUY AMERICAN ACT REQUIREMENT--CONSTRUCTION MATERIALS (MAY 2002)

(a) Definitions. Construction material, domestic construction material, and foreign construction material, as used in this provision, are defined in the clause of this solicitation entitled “Buy American Act--Construction Materials” (Federal Acquisition Regulation (FAR) clause 52.225-9).

(b) Requests for determinations of inapplicability. An offeror requesting a determination regarding the inapplicability of the Buy American Act should submit the request to the Contracting Officer in time to allow a determination before submission of offers. The offeror shall include the information and applicable supporting data required by paragraphs (c) and (d) of the clause at FAR 52.225-9 in the request. If an offeror has not requested a determination regarding the inapplicability of the Buy American Act before submitting its offer, or has not received a response to a previous request, the offeror shall include the information and supporting data in the offer.

(c) Evaluation of offers. (1) The Government will evaluate an offer requesting exception to the requirements of the Buy American Act, based on claimed unreasonable cost of domestic construction material, by adding to the offered price the appropriate percentage of the cost of such foreign construction material, as specified in paragraph (b)(3)(i) of the clause at FAR 52.225-9.

(2) If evaluation results in a tie between an offeror that requested the substitution of foreign construction material based on unreasonable cost and an offeror that did not request an exception, the Contracting Officer will award to the offeror that did not request an exception based on unreasonable cost.

(d) Alternate offers.

(1) When an offer includes foreign construction material not listed by the Government in this solicitation in paragraph (b)(2) of the clause at FAR 52.225-9, the offeror also may submit an alternate offer based on use of equivalent domestic construction material.

(2) If an alternate offer is submitted, the offeror shall submit a separate Standard Form 1442 for the alternate offer, and a separate price comparison table prepared in accordance with paragraphs (c) and (d) of the clause at FAR 52.225-9 for the offer that is based on the use of any foreign construction material for which the Government has not yet determined an exception applies.

(3) If the Government determines that a particular exception requested in accordance with paragraph (c) of the clause at FAR 52.225-9 does not apply, the Government will evaluate only those offers based on use of the equivalent domestic construction material, and the offeror shall be required to furnish such domestic construction material. An offer based on use of the foreign construction material for which an exception was requested--

(i) Will be rejected as nonresponsive if this acquisition is conducted by sealed bidding; or

(ii) May be accepted if revised during negotiations.

(End of provision)

52.227-1 AUTHORIZATION AND CONSENT (JUL 1995)

(a) The Government authorizes and consents to all use and manufacture, in performing this contract or any subcontract at any tier, of any invention described in and covered by a United States patent (1) embodied in the structure or composition of any article the delivery of which is accepted by the Government under this contract or (2) used in machinery, tools, or methods whose use necessarily results from compliance by the Contractor or a subcontractor with (i) specifications or written provisions forming a part of this contract or (ii) specific written instructions given by the Contracting Officer directing the manner of performance. The entire liability to the Government for infringement of a patent of the United States shall be determined solely by the provisions of the indemnity clause, if any, included in this contract or any subcontract hereunder (including any lower-tier subcontract), and the Government assumes liability for all other infringement to the extent of the authorization and consent hereinabove granted.

(b) The Contractor agrees to include, and require inclusion of, this clause, suitably modified to identify the parties, in all subcontracts at any tier for supplies or services (including construction, architect-engineer services, and materials, supplies, models, samples, and design or testing services expected to exceed the simplified acquisition threshold (however, omission of this clause from any subcontract, including those at or below the simplified acquisition threshold, does not affect this authorization and consent.)

(End of clause)

52.227-4 PATENT INDEMNITY--CONSTRUCTION CONTRACTS (APR 1984)

Except as otherwise provided, the Contractor agrees to indemnify the Government and its officers, agents, and employees against liability, including costs and expenses, for infringement upon any United States patent (except a patent issued upon an application that is now or may hereafter be withheld from issue pursuant to a Secrecy Order under 35 U.S.C. 181) arising out of performing this contract or out of the use or disposal by or for the account of the Government of supplies furnished or work performed under this contract.

(End of clause)

52.228-2 ADDITIONAL BOND SECURITY (OCT 1997)

The Contractor shall promptly furnish additional security required to protect the Government and persons supplying

labor or materials under this contract if--

(a) Any surety upon any bond, or issuing financial institution for other security, furnished with this contract becomes unacceptable to the Government.

(b) Any surety fails to furnish reports on its financial condition as required by the Government;

(c) The contract price is increased so that the penal sum of any bond becomes inadequate in the opinion of the Contracting Officer; or

(d) An irrevocable letter of credit (ILC) used as security will expire before the end of the period of required security. If the Contractor does not furnish an acceptable extension or replacement ILC, or other acceptable substitute, at least 30 days before an ILC's scheduled expiration, the Contracting officer has the right to immediately draw on the ILC.

(End of clause)

52.228-5 INSURANCE--WORK ON A GOVERNMENT INSTALLATION (JAN 1997)

(a) The Contractor shall, at its own expense, provide and maintain during the entire performance of this contract, at least the kinds and minimum amounts of insurance required in the Schedule or elsewhere in the contract.

(b) Before commencing work under this contract, the Contractor shall notify the Contracting Officer in writing that the required insurance has been obtained. The policies evidencing required insurance shall contain an endorsement to the effect that any cancellation or any material change adversely affecting the Government's interest shall not be effective (1) for such period as the laws of the State in which this contract is to be performed prescribe, or (2) until 30 days after the insurer or the Contractor gives written notice to the Contracting Officer, whichever period is longer.

(c) The Contractor shall insert the substance of this clause, including this paragraph (c), in subcontracts under this contract that require work on a Government installation and shall require subcontractors to provide and maintain the insurance required in the Schedule or elsewhere in the contract. The Contractor shall maintain a copy of all subcontractors' proofs of required insurance, and shall make copies available to the Contracting Officer upon request.

(End of clause)

52.228-11 PLEDGES OF ASSETS (FEB 1992)

(a) Offerors shall obtain from each person acting as an individual surety on a bid guarantee, a performance bond, or a payment bond--

(1) Pledge of assets; and

(2) Standard Form 28, Affidavit of Individual Surety.

(b) Pledges of assets from each person acting as an individual surety shall be in the form of--

(1) Evidence of an escrow account containing cash, certificates of deposit, commercial or Government securities, or other assets described in FAR 28.203-2 (except see 28.203-2(b)(2) with respect to Government securities held in book entry form) and/or;

(2) A recorded lien on real estate. The offeror will be required to provide--

(i) Evidence of title in the form of a certificate of title prepared by a title insurance company approved by the United States Department of Justice. This title evidence must show fee simple title vested in the surety along with any concurrent owners; whether any real estate taxes are due and payable; and any recorded encumbrances against the property, including the lien filed in favor of the Government as required by FAR 28.203-3(d);

(ii) Evidence of the amount due under any encumbrance shown in the evidence of title;

(iii) A copy of the current real estate tax assessment of the property or a current appraisal dated no earlier than 6 months prior to the date of the bond, prepared by a professional appraiser who certifies that the appraisal has been conducted in accordance with the generally accepted appraisal standards as reflected in the Uniform Standards of Professional Appraisal Practice, as promulgated by the Appraisal Foundation.

(End of clause)

52.228-12 PROSPECTIVE SUBCONTRACTOR REQUESTS FOR BONDS. (OCT 1995)

In accordance with Section 806(a)(3) of Pub. L. 102-190, as amended by Sections 2091 and 8105 of Pub. L. 103-355, upon the request of a prospective subcontractor or supplier offering to furnish labor or material for the performance of this contract for which a payment bond has been furnished to the Government pursuant to the Miller Act, the Contractor shall promptly provide a copy of such payment bond to the requester.

(End of clause)

52.228-14 IRREVOCABLE LETTER OF CREDIT (DEC 1999)

(a) “Irrevocable letter of credit” (ILC), as used in this clause, means a written commitment by a federally insured financial institution to pay all or part of a stated amount of money, until the expiration date of the letter, upon presentation by the Government (the beneficiary) of a written demand therefor. Neither the financial institution nor the offeror/Contractor can revoke or condition the letter of credit.

(b) If the offeror intends to use an ILC in lieu of a bid bond, or to secure other types of bonds such as performance and payment bonds, the letter of credit and letter of confirmation formats in paragraphs (e) and (f) of this clause shall be used.

(c) The letter of credit shall be irrevocable, shall require presentation of no document other than a written demand and the ILC (including confirming letter, if any), shall be issued/confirmed by an acceptable federally insured financial institution as provided in paragraph (d) of this clause, and--

(1) If used as a bid guarantee, the ILC shall expire no earlier than 60 days after the close of the bid acceptance period;

(2) If used as an alternative to corporate or individual sureties as security for a performance or payment bond, the offeror/Contractor may submit an ILC with an initial expiration date estimated to cover the entire period for which financial security is required or may submit an ILC with an initial expiration date that is a minimum period of one year from the date of issuance. The ILC shall provide that, unless the issuer provides the beneficiary written notice of non-renewal at least 60 days in advance of the current expiration date, the ILC is automatically extended without amendment for one year from the expiration date, or any future expiration date, until the period of required coverage is completed and the Contracting Officer provides the financial institution with a written statement waiving the right to payment. The period of required coverage shall be:

(i) For contracts subject to the Miller Act, the later of--

(A) One year following the expected date of final payment;

(B) For performance bonds only, until completion of any warranty period; or

(C) For payment bonds only, until resolution of all claims filed against the payment bond during the one-year period following final payment.

(ii) For contracts not subject to the Miller Act, the later of--

(A) 90 days following final payment; or

(B) For performance bonds only, until completion of any warranty period.

(d) Only federally insured financial institutions rated investment grade or higher shall issue or confirm the ILC. The offeror/Contractor shall provide the Contracting Officer a credit rating that indicates the financial institution has the required rating(s) as of the date of issuance of the ILC. Unless the financial institution issuing the ILC had letter of credit business of less than $25 million in the past year, ILCs over $5 million must be confirmed by another acceptable financial institution that had letter of credit business of less than $25 million in the past year.

(e) The following format shall be used by the issuing financial institution to create an ILC:

_____

[Issuing Financial Institution's Letterhead or Name and Address]

Issue Date _____

IRREVOCABLE LETTER OF CREDIT NO. _____

Account party's name _____

Account party's address _____

For Solicitation No. _____(for reference only)

TO: [U.S. Government agency]

[U.S. Government agency's address]

1. We hereby establish this irrevocable and transferable Letter of Credit in your favor for one or more drawings up to United States $_____. This Letter of Credit is payable at [issuing financial institution's and, if any, confirming financial institution's] office at [issuing financial institution's address and, if any, confirming financial institution's address] and expires with our close of business on _____, or any automatically extended expiration date.

2. We hereby undertake to honor your or the transferee's sight draft(s) drawn on the issuing or, if any, the confirming financial institution, for all or any part of this credit if presented with this Letter of Credit and confirmation, if any, at the office specified in paragraph 1 of this Letter of Credit on or before the expiration date or any automatically extended expiration date.

3. [This paragraph is omitted if used as a bid guarantee, and subsequent paragraphs are renumbered.] It is a condition

of this Letter of Credit that it is deemed to be automatically extended without amendment for one year from the expiration date hereof, or any future expiration date, unless at least 60 days prior to any expiration date, we notify you or the transferee by registered mail, or other receipted means of delivery, that we elect not to consider this Letter of Credit renewed for any such additional period. At the time we notify you, we also agree to notify the account party (and confirming financial institution, if any) by the same means of delivery.

4. This Letter of Credit is transferable. Transfers and assignments of proceeds are to be effected without charge to either the beneficiary or the transferee/assignee of proceeds. Such transfer or assignment shall be only at the written direction of the Government (the beneficiary) in a form satisfactory to the issuing financial institution and the confirming financial institution, if any.

5. This Letter of Credit is subject to the Uniform Customs and Practice (UCP) for Documentary Credits, 1993 Revision, International Chamber of Commerce Publication No. 500, and to the extent not inconsistent therewith, to the laws of _____ [state of confirming financial institution, if any, otherwise state of issuing financial institution].

6. If this credit expires during an interruption of business of this financial institution as described in Article 17 of the UCP, the financial institution specifically agrees to effect payment if this credit is drawn against within 30 days after the resumption of our business.

Sincerely,

_____

[Issuing financial institution]

(f) The following format shall be used by the financial institution to confirm an ILC:

_____
[Confirming Financial Institution's Letterhead or Name and Address]

(Date) _____

Our Letter of Credit Advice Number _____

Beneficiary: _____ [U.S. Government agency]

Issuing Financial Institution: _____

Issuing Financial Institution's LC No.: _____

Gentlemen:

1. We hereby confirm the above indicated Letter of Credit, the original of which is attached, issued by _____ [name of issuing financial institution] for drawings of up to United States dollars _____/U.S. $_____ and expiring with our close of business on _____ [the expiration date], or any automatically extended expiration date.

2. Draft(s) drawn under the Letter of Credit and this Confirmation are payable at our office located at _____.

3. We hereby undertake to honor sight draft(s) drawn under and presented with the Letter of Credit and this Confirmation at our offices as specified herein.

4. [This paragraph is omitted if used as a bid guarantee, and subsequent paragraphs are renumbered.] It is a condition of this confirmation that it be deemed automatically extended without amendment for one year from the expiration date hereof, or any automatically extended expiration date, unless:

(a) At least 60 days prior to any such expiration date, we shall notify the Contracting Officer, or the transferee and the issuing financial institution, by registered mail or other receipted means of delivery, that we elect not to consider this confirmation extended for any such additional period; or

(b) The issuing financial institution shall have exercised its right to notify you or the transferee, the account party, and ourselves, of its election not to extend the expiration date of the Letter of Credit.

5. This confirmation is subject to the Uniform Customs and Practice (UCP) for Documentary Credits, 1993 Revision, International Chamber of Commerce Publication No. 500, and to the extent not inconsistent therewith, to the laws of _____ [state of confirming financial institution].

6. If this confirmation expires during an interruption of business of this financial institution as described in Article 17 of the UCP, we specifically agree to effect payment if this credit is drawn against within 30 days after the resumption of our business.

Sincerely,

_____

[Confirming financial institution]

(g) The following format shall be used by the Contracting Officer for a sight draft to draw on the Letter of Credit:

SIGHT DRAFT

_____

[City, State]

(Date) _____

[Name and address of financial institution]

Pay to the order of _____ [Beneficiary Agency] _____ the sum of United States $_____. This draft is drawn under Irrevocable Letter of Credit No. _____.

_____

[Beneficiary Agency]

By: _____

(End of clause)

52.228-15 PERFORMANCE AND PAYMENT BONDS--CONSTRUCTION (JUL 2000)-

(a) Definitions. As used in this clause--

Original contract price means the award price of the contract; or, for requirements contracts, the price payable for the estimated total quantity; or, for indefinite-quantity contracts, the price payable for the specified minimum quantity. Original contract price does not include the price of any options, except those options exercised at the time of contract award.

(b) Amount of required bonds. Unless the resulting contract price is $100,000 or less, the successful offeror shall furnish performance and payment bonds to the Contracting Officer as follows:

(1) Performance bonds (Standard Form 25). The penal amount of performance bonds at the time of contract award shall be 100 percent of the original contract price.

(2) Payment Bonds (Standard Form 25-A). The penal amount of payment bonds at the time of contract award shall be 100 percent of the original contract price.

(3) Additional bond protection. (i) The Government may require additional performance and payment bond protection if the contract price is increased. The increase in protection generally will equal 100 percent of the increase in contract price.

(ii) The Government may secure the additional protection by directing the Contractor to increase the penal amount of the existing bond or to obtain an additional bond.

(c) Furnishing executed bonds. The Contractor shall furnish all executed bonds, including any necessary reinsurance agreements, to the Contracting Officer, within the time period specified in the Bid Guarantee provision of the solicitation, or otherwise specified by the Contracting Officer, but in any event, before starting work.

(d) Surety or other security for bonds. The bonds shall be in the form of firm commitment, supported by corporate sureties whose names appear on the list contained in Treasury Department Circular 570, individual sureties, or by other acceptable security such as postal money order, certified check, cashier's check, irrevocable letter of credit, or, in accordance with Treasury Department regulations, certain bonds or notes of the United States. Treasury Circular 570 is published in the Federal Register or may be obtained from the U.S. Department of Treasury, Financial Management Service, Surety Bond Branch, 401 14th Street, NW, 2nd Floor, West Wing, Washington, DC 20227.

(e) Notice of subcontractor waiver of protection (40 U.S.C. 270b(c). Any waiver of the right to sue on the payment bond is void unless it is in writing, signed by the person whose right is waived, and executed after such person has first furnished labor or material for use in the performance of the contract.

(End of clause)

INFORMATION REGARDING PERFORMANCE AND PAYMENT BONDS (FAR 28.102) (52.228-4001) FEB 2001

Within 10 days after the prescribed forms are presented to the bidder to whom award is made, unless a shorter time is prescribed in the contract, two bonds, namely a performance bond (Standard Form 25) and a payment bond (Standard Form 25A), shall be executed and furnished to the Government, each with good and sufficient surety or sureties acceptable to the Government. The penal sums of such bonds shall be as follows:

(1) Performance Bond. The penal sum of the performance bond shall equal one hundred percent (100%) of the contract price.

(2) Payment Bond. The penal sum of the payment bond shall equal one hundred percent (100%) of the contract price.

Any bonds furnished must be furnished by the Contractor to the Government prior to commencement of contract performance.

52.229-3 FEDERAL, STATE, AND LOCAL TAXES (APR 2003)

(a) As used in this clause--

"Contract date" means the date set for bid opening or, if this is a negotiated contract or a modification, the effective date of this contract or modification.

"All applicable Federal, State, and local taxes and duties" means all taxes and duties, in effect on the contract date, that the taxing authority is imposing and collecting on the transactions or property covered by this contract.

"After-imposed Federal tax" means any new or increased Federal excise tax or duty, or tax that was exempted or excluded on the contract date but whose exemption was later revoked or reduced during the contract period, on the transactions or property covered by this contract that the Contractor is required to pay or bear as the result of legislative, judicial, or administrative action taking effect after the contract date. It does not include social security tax or other employment taxes.

"After-relieved Federal tax" means any amount of Federal excise tax or duty, except social security or other employment taxes, that would otherwise have been payable on the transactions or property covered by this contract, but which the Contractor is not required to pay or bear, or for which the Contractor obtains a refund or drawback, as the result of legislative, judicial, or administrative action taking effect after the contract date.

Local taxes includes taxes imposed by a possession or territory of the United States, Puerto Rico, or the Northern Mariana Islands, if the contract is performed wholly or partly in any of those areas.

(b) The contract price includes all applicable Federal, State, and local taxes and duties.

(c) The contract price shall be increased by the amount of any after-imposed Federal tax, provided the Contractor warrants in writing that no amount for such newly imposed Federal excise tax or duty or rate increase was included in the contract price, as a contingency reserve or otherwise.

(d) The contract price shall be decreased by the amount of any after-relieved Federal tax.

(e) The contract price shall be decreased by the amount of any Federal excise tax or duty, except social security or other employment taxes, that the Contractor is required to pay or bear, or does not obtain a refund of, through the Contractor's fault, negligence, or failure to follow instructions of the Contracting Officer.

(f) No adjustment shall be made in the contract price under this clause unless the amount of the adjustment exceeds $250.

(g) The Contractor shall promptly notify the Contracting Officer of all matters relating to any Federal excise tax or duty that reasonably may be expected to result in either an increase or decrease in the contract price and shall take appropriate action as the Contracting Officer directs.

(h) The Government shall, without liability, furnish evidence appropriate to establish exemption from any Federal, State, or local tax when the Contractor requests such evidence and a reasonable basis exists to sustain the exemption.

(End of clause)

52.230-3 DISCLOSURE AND CONSISTENCY OF COST ACCOUNTING PRACTICES (APR 1998)

(a) The Contractor, in connection with this contract, shall--

(1) Comply with the requirements of 48 CFR 9904.401, Consistency in Estimating, Accumulating, and Reporting Costs; 48 CFR 9904.402, Consistency in Allocating Costs Incurred for the Same Purpose; 48 CFR 9904.405, Accounting for Unallowable Costs; and 48 CFR 9904.406, Cost Accounting Standard--Cost Accounting Period, in effect on the date of award of this contract as indicated in 48 CFR Part 9904.

(2) (CAS-covered Contracts Only) If it is a business unit of a company required to submit a Disclosure Statement, disclose in writing its cost accounting practices as required by 48 CFR 9903.202-1 through 9903.202-5. If the Contractor has notified the Contracting Officer that the Disclosure Statement contains trade secrets and commercial or financial information which is privileged and confidential, the Disclosure Statement shall be protected and shall not be released outside of the Government.

(3)(i) Follow consistently the Contractor's cost accounting practices. A change to such practices may be proposed, however, by either the Government or the Contractor, and the Contractor agrees to negotiate with the Contracting Officer the terms and conditions under which a change may be made. After the terms and conditions under which the change is to be made have been agreed to, the change must be applied prospectively to this contract, and the Disclosure Statement, if affected, must be amended accordingly.

(ii) The Contractor shall, when the parties agree to a change to a cost accounting practice and the Contracting Officer has made the finding required in 48 CFR 9903.201-6(b), that the change is desirable and not detrimental to the interests of the Government, negotiate an equitable adjustment as provided in the Changes clause of this contract. In the absence of the required finding, no agreement may be made under this contract clause that will increase costs paid by the United States.

(4) Agree to an adjustment of the contract price or cost allowance, as appropriate, if the Contractor or a subcontractor fails to comply with the applicable CAS or to follow any cost accounting practice, and such failure results in any increased costs paid by the United States. Such adjustment shall provide for recovery of the increased costs to the United States together with interest thereon computed at the annual rate of interest established under the Internal Revenue Code of 1986 (26 U.S.C. 6621), from the time the payment by the United States was made to the time the adjustment is effected.

(b) If the parties fail to agree whether the Contractor has complied with an applicable CAS, rule, or regulation as specified in 48 CFR 9903 and 9904 and as to any cost adjustment demanded by the United States, such failure to agree will constitute a dispute under the Contract Disputes Act (41 U.S.C. 601).

(c) The Contractor shall permit any authorized representatives of the Government to examine and make copies of any documents, papers, and records relating to compliance with the requirements of this clause.

(d) The Contractor shall include in all negotiated subcontracts, which the Contractor enters into, the substance of this clause, except paragraph (b), and shall require such inclusion in all other subcontracts of any tier, except that--

(1) If the subcontract is awarded to a business unit which pursuant to 48 CFR 9903.201-2 is subject to other types of CAS coverage, the substance of the applicable clause set forth in subsection 30.201-4 of the Federal Acquisition Regulation shall be inserted.

(2) This requirement shall apply only to negotiated subcontracts in excess of $500,000.

(3) The requirement shall not apply to negotiated subcontracts otherwise exempt from the requirement to include a CAS clause as specified in 48 CFR 9903.201-1.

(End of clause)

52.231-5000 EQUIPMENT OWNERSHIP AND OPERATING EXPENSE SCHEDULE
MAR 1995)--EFARS

(a) This clause does not apply to terminations. See 52.249-5000, Basis for Settlement of Proposals and FAR Part 49.

(b) Allowable cost for construction and marine plant and equipment in sound workable condition owned or controlled and furnished by a contractor or subcontractor at any tier shall be based on actual cost data for each piece of equipment or groups of similar serial and series for which the Government can determine both ownership and operating costs from the contractor's accounting records. When both ownership and operating costs cannot be determined for any piece of equipment or groups of similar serial or series equipment from the contractor's accounting records, costs for that equipment shall be based upon the applicable provisions of EP 1110-1-8, Construction Equipment Ownership and Operating Expense Schedule, Region ____. Working conditions shall be considered to be average for determining equipment rates using the schedule unless specified otherwise by the contracting officer. For equipment not included in the schedule, rates for comparable pieces of equipment may be used or a rate may be developed using the formula provided in the schedule. For forward pricing, the schedule in effect at the time of negotiations shall apply. For retroactive pricing, the schedule in effect at the time the work was performed shall apply.

(c) Equipment rental costs are allowable, subject to the provisions of FAR 31.105(d)(ii) and FAR 31.205-36. Rates for equipment rented from an organization under common control, lease-purchase arrangements, and sale-leaseback arrangements, will be determined using the schedule, except that actual rates will be used for equipment leased from an organization under common control that has an established practice of leasing the same or similar equipment to unaffiliated lessees.

(d) When actual equipment costs are proposed and the total amount of the pricing action exceeds the small purchase threshold, the contracting officer shall request the contractor to submit either certified cost or pricing data, or partial/limited data, as appropriate. The data shall be submitted on Standard Form 1411, Contract Pricing Proposal Cover Sheet.

(End of clause)

52.232-5 PAYMENTS UNDER FIXED-PRICE CONSTRUCTION CONTRACTS (SEP 2002)

(a) Payment of price. The Government shall pay the Contractor the contract price as provided in this contract.

(b) Progress payments. The Government shall make progress payments monthly as the work proceeds, or at more frequent intervals as determined by the Contracting Officer, on estimates of work accomplished which meets the standards of quality established under the contract, as approved by the Contracting Officer.

(1) The Contractor's request for progress payments shall include the following substantiation:

(i) An itemization of the amounts requested, related to the various elements of work required by the contract covered by the payment requested.

(ii) A listing of the amount included for work performed by each subcontractor under the contract.

(iii) A listing of the total amount of each subcontract under the contract.

(iv) A listing of the amounts previously paid to each such subcontractor under the contract.

(v) Additional supporting data in a form and detail required by the Contracting Officer.

(2) In the preparation of estimates, the Contracting Officer may authorize material delivered on the site and preparatory work done to be taken into consideration. Material delivered to the Contractor at locations other than the site also may be taken into consideration if--

(i) Consideration is specifically authorized by this contract; and

(ii) The Contractor furnishes satisfactory evidence that it has acquired title to such material and that the material will be used to perform this contract.

(c) Contractor certification. Along with each request for progress payments, the Contractor shall furnish the following certification, or payment shall not be made: (However, if the Contractor elects to delete paragraph (c)(4) from the certification, the certification is still acceptable.)

I hereby certify, to the best of my knowledge and belief, that--

(1) The amounts requested are only for performance in accordance with the specifications, terms, and conditions of the contract;

(2) All payments due to subcontractors and suppliers from previous payments received under the contract have been made, and timely payments will be made from the proceeds of the payment covered by this certification, in accordance with subcontract agreements and the requirements of chapter 39 of Title 31, United States Code;

(3) This request for progress payments does not include any amounts which the prime contractor intends to withhold or retain from a subcontractor or supplier in accordance with the terms and conditions of the subcontract; and

(4) This certification is not to be construed as final acceptance of a subcontractor's performance.

_____

(Name)

_____

(Title)

_____

(Date)

(d) Refund of unearned amounts. If the Contractor, after making a certified request for progress payments, discovers that a portion or all of such request constitutes a payment for performance by the Contractor that fails to conform to the specifications, terms, and conditions of this contract (hereinafter referred to as the "unearned amount"), the Contractor shall--

(1) Notify the Contracting Officer of such performance deficiency; and

(2) Be obligated to pay the Government an amount (computed by the Contracting Officer in the manner provided in paragraph (j) of this clause) equal to interest on the unearned amount from the 8th day after the date of receipt of the unearned amount until--

(i) The date the Contractor notifies the Contracting Officer that the performance deficiency has been corrected; or

(ii) The date the Contractor reduces the amount of any subsequent certified request for progress payments by an amount equal to the unearned amount.

(e) Retainage. If the Contracting Officer finds that satisfactory progress was achieved during any period for which a progress payment is to be made, the Contracting Officer shall authorize payment to be made in full. However, if satisfactory progress has not been made, the Contracting Officer may retain a maximum of 10 percent of the amount of the payment until satisfactory progress is achieved. When the work is substantially complete, the Contracting Officer may retain from previously withheld funds and future progress payments that amount the Contracting Officer considers adequate for protection of the Government and shall release to the Contractor all the remaining withheld funds. Also, on completion and acceptance of each separate building, public work, or other division of the contract, for which the price is stated separately in the contract, payment shall be made for the completed work without retention of a percentage.

(f) Title, liability, and reservation of rights. All material and work covered by progress payments made shall, at the time of payment, become the sole property of the Government, but this shall not be construed as--

(1) Relieving the Contractor from the sole responsibility for all material and work upon which payments have been made or the restoration of any damaged work; or

(2) Waiving the right of the Government to require the fulfillment of all of the terms of the contract.

(g) Reimbursement for bond premiums. In making these progress payments, the Government shall, upon request, reimburse the Contractor for the amount of premiums paid for performance and payment bonds (including coinsurance and reinsurance agreements, when applicable) after the Contractor has furnished evidence of full payment to the surety. The retainage provisions in paragraph (e) of this clause shall not apply to that portion of progress payments attributable to bond premiums.

(h) Final payment. The Government shall pay the amount due the Contractor under this contract after--

(1) Completion and acceptance of all work;

(2) Presentation of a properly executed voucher; and

(3) Presentation of release of all claims against
the Government arising by virtue of this contract, other than claims, in stated amounts, that the Contractor has specifically excepted from the operation of the release. A release may also be required of the assignee if the Contractor's claim to amounts payable under this contract has been assigned under the Assignment of Claims Act of 1940 (31 U.S.C. 3727 and 41 U.S.C. 15).

(i) Limitation because of undefinitized work. Notwithstanding any provision of this contract, progress payments shall

not exceed 80 percent on work accomplished on undefinitized contract actions. A "contract action" is any action resulting in a contract, as defined in FAR Subpart 2.1, including contract modifications for additional supplies or services, but not including contract modifications that are within the scope and under the terms of the contract, such as contract modifications issued pursuant to the Changes clause, or funding and other administrative changes.

(j) Interest computation on unearned amounts. In accordance with 31 U.S.C. 3903(c)(1), the amount payable under subparagraph (d)(2) of this clause shall be--

(1) Computed at the rate of average bond equivalent rates of 91-day Treasury bills auctioned at the most recent auction of such bills prior to the date the Contractor receives the unearned amount; and

(2) Deducted from the next available payment to the Contractor.

(End of clause)

52.232-16 PROGRESS PAYMENTS (APR 2003)

The Government will make progress payments to the Contractor when requested as work progresses, but not more frequently than monthly, in amounts of $2,500 or more approved by the Contracting Officer, under the following conditions:

(a) Computation of amounts. (1) Unless the Contractor requests a smaller amount, the Government will compute each progress payment as 80 percent of the Contractor's total costs incurred under this contract whether or not actually paid, plus financing payments to subcontractors (see paragraph (j) of this clause), less the sum of all previous progress payments made by the Government under this contract. The Contracting Officer will consider cost of money that would be allowable under FAR 31.205-10 as an incurred cost for progress payment purposes.

(2) The amount of financing and other payments for supplies and services purchased directly for the contract are limited to the amounts that have been paid by cash, check, or other forms of payment, or that are determined due and will be paid to subcontractors--

(i) In accordance with the terms and conditions of a subcontract or invoice; and

(ii) Ordinarily within 30 days of the submission of the Contractor's payment request to the Government.

(3) The Government will exclude accrued costs of Contractor contributions under employee pension plans until actually paid unless--

(i) The Contractor's practice is to make contributions to the retirement fund quarterly or more frequently; and

(ii) The contribution does not remain unpaid 30 days after the end of the applicable quarter or shorter payment period (any contribution remaining unpaid shall be excluded from the Contractor's total costs for progress payments until paid).

(4) The Contractor shall not include the following in total costs for progress payment purposes in paragraph (a)(1) of this clause:

(i) Costs that are not reasonable, allocable to this contract, and consistent with sound and generally accepted accounting principles and practices.

(ii) Costs incurred by subcontractors or suppliers.

(iii) Costs ordinarily capitalized and subject to depreciation or amortization except for the properly depreciated or amortized portion of such costs.

(iv) Payments made or amounts payable to subcontractors or suppliers, except for --

(A) completed work, including partial deliveries, to which the Contractor has acquired title; and

(B) Work under cost-reimbursement or time-and-material subcontracts to which the Contractor has acquired title.

(5) The amount of unliquidated progress payments may exceed neither (i) the progress payments made against incomplete work (including allowable unliquidated progress payments to subcontractors) nor

(ii) the value, for progress payment purposes, of the incomplete work. Incomplete work shall be considered to be the supplies and services required by this contract, for which delivery and invoicing by the Contractor and acceptance by the Government are incomplete.

(6) The total amount of progress payments shall not exceed 80 percent of the total contract price.

(7) If a progress payment or the unliquidated progress payments exceed the amounts permitted by subparagraphs (a)(4) or (a)(5) above, the Contractor shall repay the amount of such excess to the Government on demand.

(8) Notwithstanding any other terms of the contract, the Contractor agrees not to request progress payments in dollar amounts of less than $2,500. The Contracting Officer may make exceptions.

(b) Liquidation. Except as provided in the Termination for Convenience of the Government clause, all progress payments shall be liquidated by deducting from any payment under this contract, other than advance or progress payments, the unliquidated progress payments, or 80 percent of the amount invoiced, whichever is less. The Contractor shall repay to the Government any amounts required by a retroactive price reduction, after computing liquidations and payments on past invoices at the reduced prices and adjusting the unliquidated progress payments accordingly. The Government reserves the right to unilaterally change from the ordinary liquidation rate to an alternate rate when deemed appropriate for proper contract financing.

(c) Reduction or suspension. The Contracting Officer may reduce or suspend progress payments, increase the rate of liquidation, or take a combination of these actions, after finding on substantial evidence any of the following conditions:

(1) The Contractor failed to comply with any material requirement of this contract (which includes paragraphs (f) and (g) below).

(2) Performance of this contract is endangered by the Contractor's

(i) failure to make progress or

(ii) unsatisfactory financial condition.

(3) Inventory allocated to this contract substantially exceeds reasonable requirements.

(4) The Contractor is delinquent in payment of the costs of performing this contract in the ordinary course of business.

(5) The unliquidated progress payments exceed the fair value of the work accomplished on the undelivered portion of this contract.

(6) The Contractor is realizing less profit than that reflected in the establishment of any alternate liquidation rate in paragraph (b) above, and that rate is less than the progress payment rate stated in subparagraph (a)(1) above.

(d) Title.

(1) Title to the property described in this paragraph (d) shall vest in the Government. Vestiture shall be immediately upon the date of this contract, for property acquired or produced before that date. Otherwise, vestiture shall occur when the property is or should have been allocable or properly chargeable to this contract.

(2) "Property," as used in this clause, includes all of the below-described items acquired or produced by the Contractor that are or should be allocable or properly chargeable to this contract under sound and generally accepted accounting principles and practices.

(i) Parts, materials, inventories, and work in process;

(ii) Special tooling and special test equipment to which the Government is to acquire title under any other clause of this contract;

(iii) Nondurable (i.e., noncapital) tools, jigs, dies, fixtures, molds, patterns, taps, gauges, test equipment, and other similar manufacturing aids, title to which would not be obtained as special tooling under subparagraph (ii) above; and

(iv) Drawings and technical data, to the extent the Contractor or subcontractors are required to deliver them to the Government by other clauses of this contract.

(3) Although title to property is in the Government under this clause, other applicable clauses of this contract; e.g., the termination or special tooling clauses, shall determine the handling and disposition of the property.

(4) The Contractor may sell any scrap resulting from production under this contract without requesting the Contracting Officer's approval, but the proceeds shall be credited against the costs of performance.

(5) To acquire for its own use or dispose of property to which title is vested in the Government under this clause, the Contractor must obtain the Contracting Officer's advance approval of the action and the terms. The Contractor shall (i) exclude the allocable costs of the property from the costs of contract performance, and (ii) repay to the Government any amount of unliquidated progress payments allocable to the property. Repayment may be by cash or credit memorandum.

(6) When the Contractor completes all of the obligations under this contract, including liquidation of all progress payments, title shall vest in the Contractor for all property (or the proceeds thereof) not--

(i) Delivered to, and accepted by, the Government under this contract; or

(ii) Incorporated in supplies delivered to, and accepted by, the Government under this contract and to which title is vested in the Government under this clause.

(7) The terms of this contract concerning liability for Government-furnished property shall not apply to property to which the Government acquired title solely under this clause.

(e) Risk of loss. Before delivery to and acceptance by the Government, the Contractor shall bear the risk of loss for property, the title to which vests in the Government under this clause, except to the extent the Government expressly assumes the risk. The Contractor shall repay the Government an amount equal to the unliquidated progress payments that are based on costs allocable to property that is damaged, lost, stolen, or destroyed.

(f) Control of costs and property. The Contractor shall maintain an accounting system and controls adequate for the proper administration of this clause.

(g) Reports and access to records. The Contractor shall promptly furnish reports, certificates, financial statements, and other pertinent information reasonably requested by the Contracting Officer for the administration of this clause. Also, the Contractor shall give the Government reasonable opportunity to examine and verify the Contractor's books, records, and accounts.

(h) Special terms regarding default. If this contract is terminated under the Default clause, (i) the Contractor shall, on demand, repay to the Government the amount of unliquidated progress payments and (ii) title shall vest in the Contractor, on full liquidation of progress payments, for all property for which the Government elects not to require delivery under the Default clause. The Government shall be liable for no payment except as provided by the Default clause.

(i) Reservations of rights. (1) No payment or vesting of title under this clause shall (i) excuse the Contractor from performance of obligations under this contract or (ii) constitute a waiver of any of the rights or remedies of the parties under the contract.

(2) The Government's rights and remedies under this clause

(i) Shall not be exclusive but rather shall be in addition to any other rights and remedies provided by law or this contract and

(ii) Shall not be affected by delayed, partial, or omitted exercise of any right, remedy, power, or privilege, nor shall such exercise or any single exercise preclude or impair any further exercise under this clause or the exercise of any other right, power, or privilege of the Government.

(j) Financing payments to subcontractors. The financing payments to subcontractors mentioned in paragraphs (a)(1) and (a)(2) of this clause shall be all financing payments to subcontractors or divisions, if the following conditions are met:

(1) The amounts included are limited to--

(i) The unliquidated remainder of financing payments made; plus

(ii) Any unpaid subcontractor requests for financing payments.

(2) The subcontract or interdivisional order is expected to involve a minimum of approximately 6 months between the beginning of work and the first delivery; or, if the subcontractor is a small business concern, 4 months.

(3) If the financing payments are in the form of progress payments, the terms of the subcontract or interdivisional order concerning progress payments--

(i) Are substantially similar to the terms of this clause for any subcontractor that is a large business concern, or this clause with its Alternate I for any subcontractor that is a small business concern;

(ii) Are at least as favorable to the Government as the terms of this clause;

(iii) Are not more favorable to the subcontractor or division than the terms of this clause are to the Contractor;

(iv) Are in conformance with the requirements of FAR 32.504(e); and

(v) Subordinate all subcontractor rights concerning property to which the Government has title under the subcontract to the Government's right to require delivery of the property to the Government if--

(A) The Contractor defaults; or

(B) The subcontractor becomes bankrupt or insolvent.

(4) If the financing payments are in the form of performance-based payments, the terms of the subcontract or interdivisional order concerning payments--

(i) Are substantially similar to the Performance-Based Payments clause at FAR 52.232-32 and meet the criteria for, and definition of, performance-based payments in FAR Part 32;

(ii) Are in conformance with the requirements of FAR 32.504(f); and

(iii) Subordinate all subcontractor rights concerning property to which the Government has title under the subcontract to the Government's right to require delivery of the property to the Government if--

(A) The Contractor defaults; or

(B) The subcontractor becomes bankrupt or insolvent.

(5) If the financing payments are in the form of commercial item financing payments, the terms of the subcontract or interdivisional order concerning payments--

(i) Are constructed in accordance with FAR 32.206(c) and included in a subcontract for a commercial item purchase that meets the definition and standards for acquisition of commercial items in FAR Parts 2 and 12;

(ii) Are in conformance with the requirements of FAR 32.504(g); and

(iii) Subordinate all subcontractor rights concerning property to which the Government has title under the subcontract to the Government's right to require delivery of the property to the Government if--

(A) The Contractor defaults; or

(B) The subcontractor becomes bankrupt or insolvent.

(6) If financing is in the form of progress payments, the progress payment rate in the subcontract is the customary rate used by the contracting agency, depending on whether the subcontractor is or is not a small business concern.

(7) Concerning any proceeds received by the Government for property to which title has vested in the Government under the subcontract terms, the parties agree that the proceeds shall be applied to reducing any unliquidated financing payments by the Government to the Contractor under this contract.

(8) If no unliquidated financing payments to the Contractor remain, but there are unliquidated financing payments that the Contractor has made to any subcontractor, the Contractor shall be subrogated to all the rights the Government obtained through the terms required by this clause to be in any subcontract, as if all such rights had been assigned and transferred to the Contractor.

(9) To facilitate small business participation in subcontracting under this contract, the Contractor shall provide financing payments to small business concerns, in conformity with the standards for customary contract financing payments stated in Subpart 32.113. The Contractor shall not consider the need for such financing payments as a handicap or adverse factor in the award of subcontracts.

(k) Limitations on undefinitized contract actions. Notwithstanding any other progress payment provisions in this contract, progress payments may not exceed 80 percent of costs incurred on work accomplished under undefinitized contract actions. A "contract action" is any action resulting in a contract, as defined in Subpart 2.1, including contract modifications for additional supplies or services, but not including contract modifications that are within the scope and under the terms of the contract, such as contract modifications issued pursuant to the Changes clause, or funding and other administrative changes. This limitation shall apply to the costs incurred, as computed in accordance with paragraph (a) of this clause, and shall remain in effect until the contract action is definitized. Costs incurred which are subject to this limitation shall be segregated on Contractor progress payment requests and invoices from those costs eligible for higher progress payment rates. For purposes of progress payment liquidation, as described in paragraph (b) of this clause, progress payments for undefinitized contract actions shall be liquidated at 80 percent of the amount invoiced for work performed under the undefinitized contract action as long as the contract action remains undefinitized. The amount of unliquidated progress payments for undefinitized contract actions shall not exceed 80 percent of the maximum liability of the Government under the undefinitized contract action or such lower limit specified elsewhere in the contract. Separate limits may be specified for separate actions.

(l) Due date. The designated payment office will make progress payments on the **14th** day after the designated billing office receives a proper progress payment request. In the event that the Government requires an audit or other review of a specific progress payment request to ensure compliance with the terms and conditions of the contract, the designated payment office is not compelled to make payment by the specified due date. Progress payments are considered contract financing and are not subject to the interest penalty provisions of the Prompt Payment Act.

(m) Progress payments under indefinite--delivery contracts. The Contractor shall account for and submit progress payment requests under individual orders as if the order constituted a separate contract, unless otherwise specified in this contract.

(End of clause)

52.232-17 INTEREST (JUNE 1996)

(a) Except as otherwise provided in this contract under a Price Reduction for Defective Cost or Pricing Data clause or a Cost Accounting Standards clause, all amounts that become payable by the Contractor to the Government under this contract (net of any applicable tax credit under the Internal Revenue Code (26 U.S.C. 1481)) shall bear simple interest from the date due until paid unless paid within 30 days of becoming due. The interest rate shall be the interest rate established by the Secretary of the Treasury as provided in Section 12 of the Contract Disputes Act of 1978 (Public Law 95-563), which is applicable to the period in which the amount becomes due, as provided in paragraph (b) of this clause, and then at the rate applicable for each six-month period as fixed by the Secretary until the amount is paid. reproduce, prepare derivative works, distribute copies to the public, and (b) Amounts shall be due at the earliest of the following dates:

(1) The date fixed under this contract.

(2) The date of the first written demand for payment consistent with this contract, including any demand resulting from a default termination.

(3) The date the Government transmits to the Contractor a proposed supplemental agreement to confirm completed negotiations establishing the amount of debt.

(4) If this contract provides for revision of prices, the date of written notice to the Contractor stating the amount of refund payable in connection with a pricing proposal or a negotiated pricing agreement not confirmed by contract

modification.

(c) The interest charge made under this clause may be reduced under the procedures prescribed in 32.614-2 of the Federal Acquisition Regulation in effect on the date of this contract.

(End of clause)

52.232-23 ASSIGNMENT OF CLAIMS (JAN 1986)

(a) The Contractor, under the Assignment of Claims Act, as amended, 31 U.S.C. 3727, 41 U.S.C. 15 (hereafter referred to as "the Act"), may assign its rights to be paid amounts due or to become due as a result of the performance of this contract to a bank, trust company, or other financing institution, including any Federal lending agency. The assignee under such an assignment may thereafter further assign or reassign its right under the original assignment to any type of financing institution described in the preceding sentence.

(b) Any assignment or reassignment authorized under the Act and this clause shall cover all unpaid amounts payable under this contract, and shall not be made to more than one party, except that an assignment or reassignment may be made to one party as agent or trustee for two or more parties participating in the financing of this contract.

(c) The Contractor shall not furnish or disclose to any assignee under this contract any classified document (including this contract) or information related to work under this contract until the Contracting Officer authorizes such action in writing.

(End of clause)

52.232-27 PROMPT PAYMENT FOR CONSTRUCTION CONTRACTS (OCT 2003)

Notwithstanding any other payment terms in this contract, the Government will make invoice payments under the terms and conditions specified in this clause. The Government considers payment as being made on the day a check is dated or the date of an electronic funds transfer. Definitions of pertinent terms are set forth in sections 2.101, 32.001, and 32.902 of the Federal Acquisition Regulation. All days referred to in this clause are calendar days, unless otherwise specified. (However, see paragraph (a)(3) concerning payments due on Saturdays, Sundays, and legal holidays.)

(a) Invoice payments--(1) Types of invoice payments. For purposes of this clause, there are several types of invoice payments that may occur under this contract, as follows:

(i) Progress payments, if provided for elsewhere in this contract, based on Contracting Officer approval of the estimated amount and value of work or services performed, including payments for reaching milestones in any project.

(A) The due date for making such payments is 14 days after the designated billing office receives a proper payment request. If the designated billing office fails to annotate the payment request with the actual date of receipt at the time of receipt, the payment due date is the 14th day after the date of the Contractor's payment request, provided the designated billing office receives a proper payment request and there is no disagreement over quantity, quality, or Contractor compliance with contract requirements.

(B) The due date for payment of any amounts retained by the Contracting Officer in accordance with the clause at 52.232-5, Payments Under Fixed-Price Construction Contracts, is as specified in the contract or, if not specified, 30 days after approval by the Contracting Officer for release to the Contractor.

(ii) Final payments based on completion and acceptance of all work and presentation of release of all claims against the Government arising by virtue of the contract, and payments for partial deliveries that have been accepted by the Government (e.g., each separate building, public work, or other division of the contract for which the price is stated separately in the contract).

(A) The due date for making such payments is the later of the following two events:

(1) The 30th day after the designated billing office receives a proper invoice from the Contractor.

(2) The 30th day after Government acceptance of the work or services completed by the Contractor. For a final invoice when the payment amount is subject to contract settlement actions (e.g., release of claims), acceptance is deemed to occur on the effective date of the contract settlement.

(B) If the designated billing office fails to annotate the invoice with the date of actual receipt at the time of receipt, the invoice payment due date is the 30th day after the date of the Contractor's invoice, provided the designated billing office receives a proper invoice and there is no disagreement over quantity, quality, or Contractor compliance with contract requirements.

(2) Contractor's invoice. The Contractor shall prepare and submit invoices to the designated billing office specified in the contract. A proper invoice must include the items listed in paragraphs (a)(2)(i) through (a)(2)(xi) of this clause. If the invoice does not comply with these requirements, the designated billing office must return it within 7 days after receipt, with the reasons why it is not a proper invoice. When computing any interest penalty owed the Contractor, the Government will take into account if the Government notifies the Contractor of an improper invoice in an untimely manner.

(i) Name and address of the Contractor.

(ii) Invoice date and invoice number. (The Contractor should date invoices as close as possible to the date of mailing or transmission.)

(iii) Contract number or other authorization for work or services performed (including order number and contract line item number).

(iv) Description of work or services performed.

(v) Delivery and payment terms (e.g., discount for prompt payment terms).

(vi) Name and address of Contractor official to whom payment is to be sent (must be the same as that in the contract or in a proper notice of assignment).

(vii) Name (where practicable), title, phone number, and mailing address of person to notify in the event of a defective invoice.

(viii) For payments described in paragraph (a)(1)(i) of this clause, substantiation of the amounts requested and certification in accordance with the requirements of the clause at 52.232-5, Payments Under Fixed-Price Construction Contracts.

(ix) Taxpayer Identification Number (TIN). The Contractor shall include its TIN on the invoice only if required elsewhere in this contract.

(x) Electronic funds transfer (EFT) banking information.

(A) The Contractor shall include EFT banking information on the invoice only if required elsewhere in this contract.

(B) If EFT banking information is not required to be on the invoice, in order for the invoice to be a proper invoice, the Contractor shall have submitted correct EFT banking information in accordance with the applicable solicitation provision (e.g., 52.232-38, Submission of Electronic Funds Transfer Information with Offer), contract clause (e.g., 52.232-33, Payment by Electronic Funds Transfer--Central Contractor Registration, or 52.232-34, Payment by Electronic Funds Transfer--Other Than Central Contractor Registration), or applicable agency procedures.

(C) EFT banking information is not required if the Government waived the requirement to pay by EFT.

(xi) Any other information or documentation required by the contract.

(3) Interest penalty. The designated payment office will pay an interest penalty automatically, without request from the Contractor, if payment is not made by the due date and the conditions listed in paragraphs (a)(3)(i) through (a)(3)(iii) of this clause are met, if applicable. However, when the due date falls on a Saturday, Sunday, or legal holiday, the designated payment office may make payment on the following working day without incurring a late payment interest penalty.

(i) The designated billing office received a proper invoice.

(ii) The Government processed a receiving report or other Government documentation authorizing payment and there was no disagreement over quantity, quality, Contractor compliance with any contract term or condition, or requested progress payment amount.

(iii) In the case of a final invoice for any balance of funds due the Contractor for work or services performed, the amount was not subject to further contract settlement actions between the Government and the Contractor.

(4) Computing penalty amount. The Government will compute the interest penalty in accordance with the Office of Management and Budget prompt payment regulations at 5 CFR part 1315.

(i) For the sole purpose of computing an interest penalty that might be due the Contractor for payments described in paragraph (a)(1)(ii) of this clause, Government acceptance or approval is deemed to occur constructively on the 7th day after the Contractor has completed the work or services in accordance with the terms and conditions of the contract. If actual acceptance or approval occurs within the constructive acceptance or approval period, the Government will base the determination of an interest penalty on the actual date of acceptance or approval. Constructive acceptance or constructive approval requirements do not apply if there is a disagreement over quantity, quality, or Contractor compliance with a contract provision. These requirements also do not compel Government officials to accept work or services, approve Contractor estimates, perform contract administration functions, or make payment prior to fulfilling their responsibilities.

(ii) The prompt payment regulations at 5 CFR 1315.10(c) do not require the Government to pay interest penalties if payment delays are due to disagreement between the Government and the Contractor over the payment amount or other issues involving contract compliance, or on amounts temporarily withheld or retained in accordance with the terms of the contract. The Government and the Contractor shall resolve claims involving disputes, and any interest that may be payable in accordance with the clause at FAR 52.233-1, Disputes.

(5) Discounts for prompt payment. The designated payment office will pay an interest penalty automatically, without request from the Contractor, if the Government takes a discount for prompt payment improperly. The Government will calculate the interest penalty in accordance with the prompt payment regulations at 5 CFR part 1315.

(6) Additional interest penalty. (i) The designated payment office will pay a penalty amount, calculated in accordance with the prompt payment regulations at 5 CFR part 1315 in addition to the interest penalty amount only if--

(A) The Government owes an interest penalty of $1 or more;

(B) The designated payment office does not pay the interest penalty within 10 days after the date the invoice amount is paid; and

(C) The Contractor makes a written demand to the designated payment office for additional penalty payment, in accordance with paragraph (a)(6)(ii) of this clause, postmarked not later than 40 days after the date the invoice amount is paid.

(ii)(A) The Contractor shall support written demands for additional penalty payments with the following data. The Government will not request any additional data. The Contractor shall--

(1) Specifically assert that late payment interest is due under a specific invoice, and request payment of all overdue late payment interest penalty and such additional penalty as may be required;

(2) Attach a copy of the invoice on which the unpaid late payment interest was due; and

(3) State that payment of the principal has been received, including the date of receipt.

(B) If there is no postmark or the postmark is illegible--

(1) The designated payment office that receives the demand will annotate it with the date of receipt provided the demand is received on or before the 40th day after payment was made; or

(2) If the designated payment office fails to make the required annotation, the Government will determine the demand's validity based on the date the Contractor has placed on the demand, provided such date is no later than the 40th day after payment was made.

(b) Contract financing payments. If this contract provides for contract financing, the Government will make contract financing payments in accordance with the applicable contract financing clause.

(c) Subcontract clause requirements. The Contractor shall include in each subcontract for property or services (including a material supplier) for the purpose of performing this contract the following:

(1) Prompt payment for subcontractors. A payment clause that obligates the Contractor to pay the subcontractor for satisfactory performance under its subcontract not later than 7 days from receipt of payment out of such amounts as are paid to the Contractor under this contract.

(2) Interest for subcontractors. An interest penalty clause that obligates the Contractor to pay to the subcontractor an interest penalty for each payment not made in accordance with the payment clause--

(i) For the period beginning on the day after the required payment date and ending on the date on which payment of the amount due is made; and

(ii) Computed at the rate of interest established by the Secretary of the Treasury, and published in the Federal Register, for interest payments under section 12 of the Contract Disputes Act of 1978 (41 U.S.C. 611) in effect at the time the Contractor accrues the obligation to pay an interest penalty.

(3) Subcontractor clause flowdown. A clause requiring each subcontractor to use:

(i) Include a payment clause and an interest penalty clause conforming to the standards set forth in paragraphs (c)(1) and (c)(2) of this clause in each of its subcontracts; and

(ii) Require each of its subcontractors to include such clauses in their subcontracts with each lower-tier subcontractor or supplier.

(d) Subcontract clause interpretation. The clauses required by paragraph (c) of this clause shall not be construed to impair the right of the Contractor or a subcontractor at any tier to negotiate, and to include in their subcontract, provisions that--

(1) Retainage permitted. Permit the Contractor or a subcontractor to retain (without cause) a specified percentage of each progress payment otherwise due to a subcontractor for satisfactory performance under the subcontract without incurring any obligation to pay a late payment interest penalty, in accordance with terms and conditions agreed to by the parties to the subcontract, giving such recognition as the parties deem appropriate to the ability of a subcontractor to furnish a performance bond and a payment bond;

(2) Withholding permitted. Permit the Contractor or subcontractor to make a determination that part or all of the subcontractor's request for payment may be withheld in accordance with the subcontract agreement; and

(3) Withholding requirements. Permit such withholding without incurring any obligation to pay a late payment penalty if--

(i) A notice conforming to the standards of paragraph (g) of this clause previously has been furnished to the subcontractor; and

(ii) The Contractor furnishes to the Contracting Officer a copy of any notice issued by a Contractor pursuant to paragraph (d)(3)(i) of this clause.

(e) Subcontractor withholding procedures. If a Contractor, after making a request for payment to the Government but before making a payment to a subcontractor for the subcontractor's performance covered by the payment request, discovers that all or a portion of the payment otherwise due such subcontractor is subject to withholding from the subcontractor in accordance with the subcontract agreement, then the Contractor shall--

(1) Subcontractor notice. Furnish to the subcontractor a notice conforming to the standards of paragraph (g) of this clause as soon as practicable upon ascertaining the cause giving rise to a withholding, but prior to the due date for subcontractor payment;

(2) Contracting Officer notice. Furnish to the Contracting Officer, as soon as practicable, a copy of the notice furnished to the subcontractor pursuant to paragraph (e)(1) of this clause;

(3) Subcontractor progress payment reduction. Reduce the subcontractor's progress payment by an amount not to exceed the amount specified in the notice of withholding furnished under paragraph (e)(1) of this clause;

(4) Subsequent subcontractor payment. Pay the subcontractor as soon as practicable after the correction of the identified subcontract performance deficiency, and--

(i) Make such payment within--

(A) Seven days after correction of the identified subcontract performance deficiency (unless the funds therefor must be recovered from the Government because of a reduction under paragraph
(e)(5)(i)) of this clause; or

(B) Seven days after the Contractor recovers such funds from the Government; or

(ii) Incur an obligation to pay a late payment interest penalty computed at the rate of interest established by the Secretary of the Treasury, and published in the Federal Register, for interest payments under section 12 of the Contracts Disputes Act of 1978 (41 U.S.C. 611) in effect at the time the Contractor accrues the obligation to pay an interest penalty;

(5) Notice to Contracting Officer. Notify the Contracting Officer upon--

(i) Reduction of the amount of any subsequent certified application for payment; or

(ii) Payment to the subcontractor of any withheld amounts of a progress payment, specifying--

(A) The amounts withheld under paragraph (e)(1) of this clause; and

(B) The dates that such withholding began and ended; and

(6) Interest to Government. Be obligated to pay to the Government an amount equal to interest on the withheld payments (computed in the manner provided in 31 U.S.C. 3903(c)(1)), from the 8th day after receipt of the withheld amounts from the Government until--

(i) The day the identified subcontractor performance deficiency is corrected; or

(ii) The date that any subsequent payment is reduced under paragraph (e)(5)(i) of this clause.

(f) Third-party deficiency reports--(1) Withholding from subcontractor. If a Contractor, after making payment to a first-tier subcontractor, receives from a supplier or subcontractor of the first-tier subcontractor (hereafter referred to as a "second-tier subcontractor") a written notice in accordance with section 2 of the Act of August 24, 1935 (40 U.S.C. 270b, Miller Act), asserting a deficiency in such first-tier subcontractor's performance under the contract for which the Contractor may be ultimately liable, and the Contractor determines that all or a portion of future payments otherwise due such first-tier subcontractor is subject to withholding in accordance with the subcontract agreement, the Contractor may, without incurring an obligation to pay an interest penalty under paragraph (e)(6) of this clause--

(i) Furnish to the first-tier subcontractor a notice conforming to the standards of paragraph (g) of this clause as soon as practicable upon making such determination; and

(ii) Withhold from the first-tier subcontractor's next available progress payment or payments an amount not to exceed the amount specified in the notice of withholding furnished under paragraph (f)(1)(i) of this clause.

(2) Subsequent payment or interest charge. As soon as practicable, but not later than 7 days after receipt of satisfactory written notification that the identified subcontract performance deficiency has been corrected, the Contractor shall--

(i) Pay the amount withheld under paragraph (f)(1)(ii) of this clause to such first-tier subcontractor; or

(ii) Incur an obligation to pay a late payment interest penalty to such first-tier subcontractor computed at the rate of interest established by the Secretary of the Treasury, and published in the Federal Register, for interest payments under section 12 of the Contracts DisputesAct of 1978 (41 U.S.C. 611) in effect at the time the Contractor accrues the obligation to pay an interest penalty.

(g) Written notice of subcontractor withholding. The Contractor shall issue a written notice of any withholding to a subcontractor (with a copy furnished to the Contracting Officer), specifying--

(1) The amount to be withheld;

(2) The specific causes for the withholding under the terms of the subcontract; and

(3) The remedial actions to be taken by the subcontractor in order to receive payment of the amounts withheld.

(h) Subcontractor payment entitlement. The Contractor may not request payment from the Government of any amount withheld or retained in accordance with paragraph (d) of this clause until such time as the Contractor has determined and certified to the Contracting Officer that the subcontractor is entitled to the payment of such amount.

(i) Prime-subcontractor disputes. A dispute between the Contractor and subcontractor relating to the amount or entitlement of a subcontractor to a payment or a late payment interest penalty under a clause included in the subcontract pursuant to paragraph (c) of this clause does not constitute a dispute to which the Government is a party. The Government may not be interpleaded in any judicial or administrative proceeding involving such a dispute.

(j) Preservation of prime-subcontractor rights. Except as provided in paragraph (i) of this clause, this clause shall not limit or impair any contractual, administrative, or judicial remedies otherwise available to the Contractor or a subcontractor in the event of a dispute involving late payment or nonpayment by the Contractor or deficient subcontract performance or nonperformance by a subcontractor.

(k) Non-recourse for prime contractor interest penalty. The Contractor's obligation to pay an interest penalty to a subcontractor pursuant to the clauses included in a subcontract under paragraph (c) of this clause shall not be construed to be an obligation of the Government for such interest penalty. A cost-reimbursement claim may not include any amount for reimbursement of such interest penalty.

(l) Overpayments. If the Contractor becomes aware of a duplicate contract financing or invoice payment or that the Government has otherwise overpaid on a contract financing or invoice payment, the Contractor shall immediately notify the Contracting Officer and request instructions for disposition of the overpayment.

(End of clause)

52.232-33 PAYMENT BY ELECTRONIC FUNDS TRANSFER—CENTRAL CONTRACTOR REGISTRATION (OCT 2003)

(a) Method of payment. (1) All payments by the Government under this contract shall be made by electronic funds transfer (EFT), except as provided in paragraph (a)(2) of this clause. As used in this clause, the term “EFT” refers to the funds transfer and may also include the payment information transfer.

(2) In the event the Government is unable to release one or more payments by EFT, the Contractor agrees to either--

(i) Accept payment by check or some other mutually agreeable method of payment; or

(ii) Request the Government to extend the payment due date until such time as the Government can make payment by EFT (but see paragraph (d) of this clause).

(b) Contractor's EFT information. The Government shall make payment to the Contractor using the EFT information contained in the Central Contractor Registration (CCR) database. In the event that the EFT information changes, the Contractor shall be responsible for providing the updated information to the CCR database.

(c) Mechanisms for EFT payment. The Government may make payment by EFT through either the Automated Clearing House (ACH) network, subject to the rules of the National Automated Clearing House Association, or the Fedwire Transfer System. The rules governing Federal payments through the ACH are contained in 31 CFR part 210.

(d) Suspension of payment. If the Contractor's EFT information in the CCR database is incorrect, then the Government need not make payment to the Contractor under this contract until correct EFT information is entered into the CCR database; and any invoice or contract financing request shall be deemed not to be a proper invoice for the purpose of prompt payment under this contract. The prompt payment terms of the contract regarding notice of an improper invoice and delays in accrual of interest penalties apply.

(e) Liability for uncompleted or erroneous transfers. (1) If an uncompleted or erroneous transfer occurs because the Government used the Contractor's EFT information incorrectly, the Government remains responsible for--

(i) Making a correct payment;

(ii) Paying any prompt payment penalty due; and

(iii) Recovering any erroneously directed funds.

(2) If an uncompleted or erroneous transfer occurs because the Contractor's EFT information was incorrect, or was revised within 30 days of Government release of the EFT payment transaction instruction to the Federal Reserve System, and--

(i) If the funds are no longer under the control of the payment office, the Government is deemed to have made payment and the Contractor is responsible for recovery of any erroneously directed funds; or

(ii) If the funds remain under the control of the payment office, the Government shall not make payment, and the provisions of paragraph (d) of this clause shall apply.

(f) EFT and prompt payment. A payment shall be deemed to have been made in a timely manner in accordance with the prompt payment terms of this contract if, in the EFT payment transaction instruction released to the Federal Reserve System, the date specified for settlement of the payment is on or before the prompt payment due date, provided the specified payment date is a valid date under the rules of the Federal Reserve System.

(g) EFT and assignment of claims. If the Contractor assigns the proceeds of this contract as provided for in the assignment of claims terms of this contract, the Contractor shall require as a condition of any such assignment, that the assignee shall register separately in the CCR database and shall be paid by EFT in accordance with the terms of this clause. Notwithstanding any other requirement of this contract, payment to an ultimate recipient other than the Contractor, or a financial institution properly recognized under an assignment of claims pursuant to subpart 32.8, is not permitted. In all respects, the requirements of this clause shall apply to the assignee as if it were the Contractor. EFT information that shows the ultimate recipient of the transfer to be other than the Contractor, in the absence of a proper assignment of claims acceptable to the Government, is incorrect EFT information within the meaning of paragraph (d) of this clause.

(h) Liability for change of EFT information by financial agent. The Government is not liable for errors resulting from changes to EFT information made by the Contractor's financial agent.

(i) Payment information. The payment or disbursing office shall forward to the Contractor available payment information that is suitable for transmission as of the date of release of the EFT instruction to the Federal Reserve System. The Government may request the Contractor to designate a desired format and method(s) for delivery of payment information from a list of formats and methods the payment office is capable of executing. However, the Government does not guarantee that any particular format or method of delivery is available at any particular payment office and retains the latitude to use the format and delivery method most convenient to the Government. If

the Government makes payment by check in accordance with paragraph (a) of this clause, the Government shall mail the payment information to the remittance address contained in the CCR database.

(End of Clause)

52.233-1 DISPUTES. (JUL 2002)

(a) This contract is subject to the Contract Disputes Act of 1978, as amended (41 U.S.C. 601-613).

(b) Except as provided in the Act, all disputes arising under or relating to this contract shall be resolved under this clause.

(c) Claim, as used in this clause, means a written demand or written assertion by one of the contracting parties seeking, as a matter of right, the payment of money in a sum certain, the adjustment or interpretation of contract terms, or other relief arising under or relating to this contract. However, a written demand or written assertion by the Contractor seeking the payment of money exceeding $100,000 is not a claim under the Act until certified. A voucher, invoice, or other routine request for payment that is not in dispute when submitted is not a claim under the Act. The submission may be converted to a claim under the Act, by complying with the submission and certification requirements of this clause, if it is disputed either as to liability or amount or is not acted upon in a reasonable time.

(d)(1) A claim by the Contractor shall be made in writing and, unless otherwise stated in this contract, submitted within 6 years after accrual of the claim to the Contracting Officer for a written decision. A claim by the Government against the Contractor shall be subject to a written decision by the Contracting Officer.

(2)(i) The contractors shall provide the certification specified in subparagraph (d)(2)(iii) of this clause when submitting any claim -

(A) Exceeding $100,000; or

(B) Regardless of the amount claimed, when using -

(1) Arbitration conducted pursuant to 5 U.S.C. 575-580; or

(2) Any other alternative means of dispute resolution (ADR) technique that the agency elects to handle in accordance with the Administrative Dispute Resolution Act (ADRA).

(ii) The certification requirement does not apply to issues in controversy that have not been submitted as all or part of a claim.

(iii) The certification shall state as follows: "I certify that the claim is made in good faith; that the supporting data are accurate and complete to the best of my knowledge and belief; that the amount requested accurately reflects the contract adjustment for which the Contractor believes the Government is liable; and that I am duly authorized to certify the claim on behalf of the Contractor.

(3) The certification may be executed by any person duly authorized to bind the Contractor with respect to the claim.

(e) For Contractor claims of $100,000 or less, the Contracting Officer must, if requested in writing by the Contractor, render a decision within 60 days of the request. For Contractor-certified claims over $100,000, the Contracting Officer must, within 60 days, decide the claim or notify the Contractor of the date by which the decision will be made.

(f) The Contracting Officer's decision shall be final unless the Contractor appeals or files a suit as provided in the

Act.

(g) If the claim by the Contractor is submitted to the Contracting Officer or a claim by the Government is presented to the Contractor, the parties, by mutual consent, may agree to use alternative disput resolution (ADR). If the Contractor refuses an offer for ADR, the Contractor shall inform the Contracting Officer, in writing, of the Contractor's specific reasons for rejecting the request.

(h) The Government shall pay interest on the amount found due and unpaid from (1) the date the Contracting Officer receives the claim (certified, if required); or (2) the date that payment otherwise would be due, if that date is later, until the date of payment. With regard to claims having defective certifications, as defined in (FAR) 48 CFR 33.201, interest shall be paid from the date that the Contracting Officer initially receives the claim. Simple interest on claims shall be paid at the rate, fixed by the Secretary of the Treasury as provided in the Act, which is applicable to the period during which the Contracting Officer receives the claim and then at the rate applicable for each 6-month period as fixed by the Treasury Secretary during the pendency of the claim.

(i) The Contractor shall proceed diligently with performance of this contract, pending final resolution of any request for relief, claim, appeal, or action arising under the contract, and comply with any decision of the Contracting Officer.

(End of clause)

52.233-3 PROTEST AFTER AWARD (AUG. 1996)

(a) Upon receipt of a notice of protest (as defined in FAR 33.101) or a determination that a protest is likely (see FAR 33.102(d)), the Contracting Officer may, by written order to the Contractor, direct the Contractor to stop performance of the work called for by this contract. The order shall be specifically identified as a stop-work order issued under this clause. Upon receipt of the order, the Contractor shall immediately comply with its terms and take all reasonable steps to minimize the incurrence of costs allocable to the work covered by the order during the period of work stoppage. Upon receipt of the final decision in the protest, the Contracting Officer shall either--

(1) Cancel the stop-work order; or

(2) Terminate the work covered by the order as provided in the Default, or the Termination for Convenience of the Government, clause of this contract.

(b) If a stop-work order issued under this clause is canceled either before or after a final decision in the protest, the Contractor shall resume work. The Contracting Officer shall make an equitable adjustment in the delivery schedule or contract price, or both, and the contract shall be modified, in writing, accordingly, if--

(1) The stop-work order results in an increase in the time required for, or in the Contractor's cost properly allocable to, the performance of any part of this contract; and

(2) The Contractor asserts its right to an adjustment within 30 days after the end of the period of work stoppage; provided, that if the Contracting Officer decides the facts justify the action, the Contracting Officer may receive and act upon a proposal at any time before final payment under this contract.

(c) If a stop-work order is not canceled and the work covered by the order is terminated for the convenience of the Government, the Contracting Officer shall allow reasonable costs resulting from the stop-work order in arriving at the termination settlement.

(d) If a stop-work order is not canceled and the work covered by the order is terminated for default, the Contracting Officer shall allow, by equitable adjustment or otherwise, reasonable costs resulting from the stop-work order.

(e) The Government's rights to terminate this contract at any time are not affected by action taken under this clause.

(f) If, as the result of the Contractor's intentional or negligent misstatement, misrepresentation, or miscertification, a protest related to this contract is sustained, and the Government pays costs, as provided in FAR 33.102(b)(2) or 33.104(h)(1), the Government may require the Contractor to reimburse the Government the amount of such costs. In addition to any other remedy available, and pursuant to the requirements of Subpart 32.6, the Government may collect this debt by offsetting the amount against any payment due the Contractor under any contract between the Contractor and the Government.

(End of clause)

52.236-1 PERFORMANCE OF WORK BY THE CONTRACTOR (APR 1984)

The Contractor shall perform on the site, and with its own organization, work equivalent to at least **15%** of the total amount of work to be performed under the contract. This percentage may be reduced by a supplemental agreement to this contract if, during performing the work, the Contractor requests a reduction and the Contracting Officer determines that the reduction would be to the advantage of the Government.

(End of clause)

52.236-2 DIFFERING SITE CONDITIONS (APR 1984)

As prescribed in 36.502, insert the following clause in solicitations and contracts when a fixed-price construction contract or a fixed-price dismantling, demolition, or removal of improvements contract is contemplated and the contract amount is expected to exceed the small purchase limitation. The Contracting Officer may insert the clause in solicitations and contracts when a fixed-price construction or a fixed-price contract for dismantling, demolition, or removal of improvements is contemplated and the contract amount is expected to be within the small purchase limitation.

(a) The Contractor shall promptly, and before the conditions are disturbed, give a written notice to the Contracting Officer of

(1) subsurface or latent physical conditions at the site which differ materially from those indicated in this contract, or

(2) unknown physical conditions at the site, of an unusual nature, which differ materially from those ordinarily encountered and generally recognized as inhering in work of the character provided for in the contract.

(b) The Contracting Officer shall investigate the site conditions promptly after receiving the notice. If the conditions do materially so differ and cause an increase or decrease in the Contractor's cost of, or the time required for, performing any part of the work under this contract, whether or not changed as a result of the conditions, an equitable adjustment shall be made under this clause and the contract modified in writing accordingly.

(c) No request by the Contractor for an equitable adjustment to the contract under this clause shall be allowed, unless the Contractor has given the written notice required; provided, that the time prescribed in (a) above for giving written notice may be extended by the Contracting Officer.

(d) No request by the Contractor for an equitable adjustment to the contract for differing site conditions shall be allowed if made after final payment under this contract.

(End of clause)

52.236-3 SITE INVESTIGATION AND CONDITIONS AFFECTING THE WORK (APR 1984)

(a) The Contractor acknowledges that it has taken steps reasonably necessary to ascertain the nature and location of the work, and that it has investigated and satisfied itself as to the general and local conditions which can affect the work or its cost, including but not limited to

(1) conditions bearing upon transportation, disposal, handling, and storage of materials;

(2) the availability of labor, water, electric power, and roads;

(3) uncertainties of weather, river stages, tides, or similar physical conditions at the site;

(4) the conformation and conditions of the ground; and (5) the character of equipment and facilities needed preliminary to and during work performance. The Contractor also acknowledges that it has satisfied itself as to the character, quality, and quantity of surface and subsurface materials or obstacles to be encountered insofar as this information is reasonably ascertainable from an inspection of the site, including all exploratory work done by the Government, as well as from the drawings and specifications made a part of this contract. Any failure of the Contractor to take the actions described and acknowledged in this paragraph will not relieve the Contractor from responsibility for estimating properly the difficulty and cost of successfully performing the work, or for proceeding to successfully perform the work without additional expense to the Government.

(b) The Government assumes no responsibility for any conclusions or interpretations made by the Contractor based on the information made available by the Government. Nor does the Government assume responsibility for any understanding reached or representation made concerning conditions which can affect the work by any of its officers or agents before the execution of this contract, unless that understanding or representation is expressly stated in this contract.

(End of clause)

52.236-5 MATERIAL AND WORKMANSHIP (APR 1984)

(a) All equipment, material, and articles incorporated into the work covered by this contract shall be new and of the most suitable grade for the purpose intended, unless otherwise specifically provided in this contract. References in the specifications to equipment, material, articles, or patented processes by trade name, make, or catalog number, shall be regarded as establishing a standard of quality and shall not be construed as limiting competition. The Contractor may, at its option, use any equipment, material, article, or process that, in the judgment of the Contracting Officer, is equal to that named in the specifications, unless otherwise specifically provided in this contract.

(b) The Contractor shall obtain the Contracting Officer's approval of the machinery and mechanical and other equipment to be incorporated into the work. When requesting approval, the Contractor shall furnish to the Contracting Officer the name of the manufacturer, the model number, and other information concerning the performance, capacity, nature, and rating of the machinery and mechanical and other equipment. When required by this contract or by the Contracting Officer, the Contractor shall also obtain the Contracting Officer's approval of the material or articles which the Contractor contemplates incorporating into the work. When requesting approval, the Contractor shall provide full information concerning the material or articles. When directed to do so, the Contractor shall submit samples for approval at the Contractor's expense, with all shipping charges prepaid. Machinery,

equipment, material, and articles that do not have the required approval shall be installed or used at the risk of subsequent rejection.

(c) All work under this contract shall be performed in a skillful and workmanlike manner. The Contracting Officer may require, in writing, that the Contractor remove from the work any employee the Contracting Officer deems incompetent, careless, or otherwise objectionable.

(End of clause)

52.236-6 SUPERINTENDENCE BY THE CONTRACTOR (APR 1984)

At all times during performance of this contract and until the work is completed and accepted, the Contractor shall directly superintend the work or assign and have on the worksite a competent superintendent who is satisfactory to the Contracting Officer and has authority to act for the Contractor.

(End of clause)

52.236-7 PERMITS AND RESPONSIBILITIES (NOV 1991)

The Contractor shall, without additional expense to the Government, be responsible for obtaining any necessary licenses and permits, and for complying with any Federal, State, and municipal laws, codes, and regulations applicable to the performance of the work. The Contractor shall also be responsible for all damages to persons or property that occur as a result of the Contractor's fault or negligence. The Contractor shall also be responsible for all materials delivered and work performed until completion and acceptance of the entire work, except for any completed unit of work which may have been accepted under the contract.

(End of clause)

52.236-8 OTHER CONTRACTS (APR 1984)

The Government may undertake or award other contracts for additional work at or near the site of the work under this contract. The Contractor shall fully cooperate with the other contractors and with Government employees and shall carefully adapt scheduling and performing the work under this contract to accommodate the additional work, heeding any direction that may be provided by the Contracting Officer. The Contractor shall not commit or permit any act that will interfere with the performance of work by any other contractor or by Government employees.

(End of clause)

52.236-9 PROTECTION OF EXISTING VEGETATION, STRUCTURES, EQUIPMENT, UTILITIES, AND IMPROVEMENTS (APR 1984)

(a) The Contractor shall preserve and protect all structures, equipment, and vegetation (such as trees, shrubs, and grass) on or adjacent to the work site, which are not to be removed and which do not unreasonably interfere with the work required under this contract. The Contractor shall only remove trees when specifically authorized to do so, and shall avoid damaging vegetation that will remain in place. If any limbs or branches of trees are broken during contract

performance, or by the careless operation of equipment, or by workmen, the Contractor shall trim those limbs or branches with a clean cut and paint the cut with a tree-pruning compound as directed by the Contracting Officer.

(b) The Contractor shall protect from damage all existing improvements and utilities

(1) at or near the work site, and

(2) on adjacent property of a third party, the locations of which are made known to or should be known by the Contractor. The Contractor shall repair any damage to those facilities, including those that are the property of a third party, resulting from failure to comply with the requirements of this contract or failure to exercise reasonable care in performing the work. If the Contractor fails or refuses to repair the damage promptly, the Contracting Officer may have the necessary work performed and charge the cost to the Contractor.

(End of clause)

52.236-10 OPERATIONS AND STORAGE AREAS (APR 1984)

(a) The Contractor shall confine all operations (including storage of materials) on Government premises to areas authorized or approved by the Contracting Officer. The Contractor shall hold and save the Government, its officers and agents, free and harmless from liability of any nature occasioned by the Contractor's performance.

(b) Temporary buildings (e.g., storage sheds, shops, offices) and utilities may be erected by the Contractor only with the approval of the Contracting Officer and shall be built with labor and materials furnished by the Contractor without expense to the Government. The temporary buildings and utilities shall remain the property of the Contractor and shall be removed by the Contractor at its expense upon completion of the work. With the written consent of the Contracting Officer, the buildings and utilities may be abandoned and need not be removed.

(c) The Contractor shall, under regulations prescribed by the Contracting Officer, use only established roadways, or use temporary roadways constructed by the Contractor when and as authorized by the Contracting Officer. When materials are transported in prosecuting the work, vehicles shall not be loaded beyond the loading capacity recommended by the manufacturer of the vehicle or prescribed by any Federal, State, or local law or regulation. When it is necessary to cross curbs or sidewalks, the Contractor shall protect them from damage. The Contractor shall repair or pay for the repair of any damaged curbs, sidewalks, or roads.

(End of clause)

52.236-11 USE AND POSSESSION PRIOR TO COMPLETION (APR 1984)

(a) The Government shall have the right to take possession of or use any completed or partially completed part of the work. Before taking possession of or using any work, the Contracting Officer shall furnish the Contractor a list of items of work remaining to be performed or corrected on those portions of the work that the Government intends to take possession of or use. However, failure of the Contracting Officer to list any item of work shall not relieve the Contractor of responsibility for complying with the terms of the contract. The Government's possession or use shall not be deemed an acceptance of any work under the contract.

(b) While the Government has such possession or use, the Contractor shall be relieved of the responsibility for the loss of or damage to the work resulting from the Government's possession or use, notwithstanding the terms of the clause in this contract entitled "Permits and Responsibilities." If prior possession or use by the Government delays the progress of the work or causes additional expense to the Contractor, an equitable adjustment shall be made in the

contract price or the time of completion, and the contract shall be modified in writing accordingly.

(End of clause)

52.236-12 CLEANING UP (APR 1984)

The Contractor shall at all times keep the work area, including storage areas, free from accumulations of waste materials. Before completing the work, the Contractor shall remove from the work and premises any rubbish, tools, scaffolding, equipment, and materials that are not the property of the Government. Upon completing the work, the Contractor shall leave the work area in a clean, neat, and orderly condition satisfactory to the Contracting Officer.

(End of clause)

52.236-13 ACCIDENT PREVENTION (NOV 1991)

(a) The Contractor shall provide and maintain work environments and procedures which will

(1) safeguard the public and Government personnel, property, materials, supplies, and equipment exposed to Contractor operations and activities;

(2) avoid interruptions of Government operations and delays in project completion dates; and

(3) control costs in the performance of this contract.

(b) For these purposes on contracts for construction or dismantling, demolition, or removal of improvements, the Contractor shall-

(1) Provide appropriate safety barricades, signs, and signal lights;

(2) Comply with the standards issued by the Secretary of Labor at 29 CFR Part 1926 and 29 CFR Part 1910; and

(3) Ensure that any additional measures the Contracting Officer determines to be reasonably necessary for the purposes are taken.

(c) If this contract is for construction or dismantling, demolition or removal of improvements with any Department of Defense agency or component, the Contractor shall comply with all pertinent provisions of the latest version of U.S. Army Corps of Engineers Safety and Health Requirements Manual, EM 385-1-1, in effect on the date of the solicitation.

(d) Whenever the Contracting Officer becomes aware of any noncompliance with these requirements or any condition which poses a serious or imminent danger to the health or safety of the public or Government personnel, the Contracting Officer shall notify the Contractor orally, with written confirmation, and request immediate initiation of corrective action. This notice, when delivered to the Contractor or the Contractor's representative at the work site, shall be deemed sufficient notice of the noncompliance and that corrective action is required. After receiving the notice, the Contractor shall immediately take corrective action. If the Contractor fails or refuses to promptly take corrective action, the Contracting Officer may issue an order stopping all or part of the work until satisfactory corrective action has been taken. The Contractor shall not be entitled to any equitable adjustment of the contract price or extension of the performance schedule on any stop work order issued under this clause.

(5) The Contractor shall insert this clause, including this paragraph (e), with appropriate changes in the designation of the parties, in subcontracts.

(End of clause)

52.236-14 AVAILABILITY AND USE OF UTILITY SERVICES (APR 1984)

(a) The Government shall make all reasonably required amounts of utilities available to the Contractor from existing outlets and supplies, as specified in the contract. Unless otherwise provided in the contract, the amount of each utility service consumed shall be charged to or paid for by the Contractor at prevailing rates charged to the Government or, where the utility is produced by the Government, at reasonable rates determined by the Contracting Officer. The Contractor shall carefully conserve any utilities furnished without charge.

(b) The Contractor, at its expense and in a workmanlike manner satisfactory to the Contracting Officer, shall install and maintain all necessary temporary connections and distribution lines, and all meters required to measure the amount of each utility used for the purpose of determining charges. Before final acceptance of the work by the Government, the Contractor shall remove all the temporary connections, distribution lines, meters, and associated paraphernalia.

(End of clause)

52.236-15 SCHEDULES FOR CONSTRUCTION CONTRACTS (APR 1984)

(a) The Contractor shall, within five days after the work commences on the contract or another period of time determined by the Contracting Officer, prepare and submit to the Contracting Officer for approval three copies of a practicable schedule showing the order in which the Contractor proposes to perform the work, and the dates on which the Contractor contemplates starting and completing the several salient features of the work (including acquiring materials, plant, and equipment). The schedule shall be in the form of a progress chart of suitable scale to indicate appropriately the percentage of work scheduled for completion by any given date during the period. If the Contractor fails to submit a schedule within the time prescribed, the Contracting Officer may withhold approval of progress payments until the Contractor submits the required schedule.

(b) The Contractor shall enter the actual progress on the chart as directed by the Contracting Officer, and upon doing so shall immediately deliver three copies of the annotated schedule to the Contracting Officer. If, in the opinion of the Contracting Officer, the Contractor falls behind the approved schedule, the Contractor shall take steps necessary to improve its progress, including those that may be required by the Contracting Officer, without additional cost to the Government. In this circumstance, the Contracting Officer may require the Contractor to increase the number of shifts, overtime operations, days of work, and/or the amount of construction plant, and to submit for approval any supplementary schedule or schedules in chart form as the Contracting Officer deems necessary to demonstrate how the approved rate of progress will be regained.

(c) Failure of the Contractor to comply with the requirements of the Contracting Officer under this clause shall be grounds for a determination by the Contracting Officer that the Contractor is not prosecuting the work with sufficient diligence to ensure completion within the time specified in the contract. Upon making this determination, the Contracting Officer may terminate the Contractor's right to proceed with the work, or any separable part of it, in accordance with the default terms of this contract.

(End of clause)

52.236-17 LAYOUT OF WORK (APR 1984)

The Contractor shall lay out its work from Government established base lines and bench marks indicated on the drawings, and shall be responsible for all measurements in connection with the layout. The Contractor shall furnish, at its own expense, all stakes, templates, platforms, equipment, tools, materials, and labor required to lay out any part of the work. The Contractor shall be responsible for executing the work to the lines and grades that may be established or indicated by the Contracting Officer. The Contractor shall also be responsible for maintaining and preserving all stakes and other marks established by the Contracting Officer until authorized to remove them. If such marks are destroyed by the Contractor or through its negligence before their removal is authorized, the Contracting Officer may replace them and deduct the expense of the replacement from any amounts due or to become due to the Contractor.

(End of clause)

52.236-21 SPECIFICATIONS AND DRAWINGS FOR CONSTRUCTION (FEB 1997)

(a) The Contractor shall keep on the work site a copy of the drawings and specifications and shall at all times give the Contracting Officer access thereto. Anything mentioned in the specifications and not shown on the drawings, or shown on the drawings and not mentioned in the specifications, shall be of like effect as if shown or mentioned in both. In case of difference between drawings and specifications, the specifications shall govern. In case of discrepancy in the figures, in the drawings, or in the specifications, the matter shall be promptly submitted to the Contracting Officer, who shall promptly make a determination in writing. Any adjustment by the Contractor without such a determination shall be at its own risk and expense. The Contracting Officer shall furnish from time to time such detailed drawings and other information as considered necessary, unless otherwise provided.

(b) Wherever in the specifications or upon the drawings the words "directed", "required", "ordered", "designated", "prescribed", or words of like import are used, it shall be understood that the "direction", "requirement", "order", "designation", or "prescription", of the Contracting Officer is intended and similarly the words "approved", "acceptable", "satisfactory", or words of like import shall mean "approved by," or "acceptable to", or "satisfactory to" the Contracting Officer, unless otherwise expressly stated.

(c) Where "as shown," as indicated", "as detailed", or words of similar import are used, it shall be understood that the reference is made to the drawings accompanying this contract unless stated otherwise. The word "provided" as used herein shall be understood to mean "provide complete in place," that is "furnished and installed".

(d) Shop drawings means drawings, submitted to the Government by the Contractor, subcontractor, or any lower tier subcontractor pursuant to a construction contract, showing in detail (1) the proposed fabrication and assembly of structural elements, and (2) the installation (i.e., fit, and attachment details) of materials or equipment. It includes drawings, diagrams, layouts, schematics, descriptive literature, illustrations, schedules, performance and test data, and similar materials furnished by the contractor to explain in detail specific portions of the work required by the contract. The Government may duplicate, use, and disclose in any manner and for any purpose shop drawings delivered under this contract.

(e) If this contract requires shop drawings, the Contractor shall coordinate all such drawings, and review them for accuracy, completeness, and compliance with contract requirements and shall indicate its approval thereon as evidence of such coordination and review. Shop drawings submitted to the Contracting Officer without evidence of the Contractor's approval may be returned for resubmission. The Contracting Officer will indicate an approval or disapproval of the shop drawings and if not approved as submitted shall indicate the Government's reasons therefor. Any work done before such approval shall be at the Contractor's risk. Approval by the Contracting Officer shall not

relieve the Contractor from responsibility for any errors or omissions in such drawings, nor from responsibility for complying with the requirements of this contract, except with respect to variations described and approved in accordance with (f) below.

(f) If shop drawings show variations from the contract requirements, the Contractor shall describe such variations in writing, separate from the drawings, at the time of submission. If the Contracting Officer approves any such variation, the Contracting Officer shall issue an appropriate contract modification, except that, if the variation is minor or does not involve a change in price or in time of performance, a modification need not be issued.

(g) The Contractor shall submit to the Contracting Officer for approval four copies (unless otherwise indicated) of all shop drawings as called for under the various headings of these specifications. Three sets (unless otherwise indicated) of all shop drawings, will be retained by the Contracting Officer and one set will be returned to the Contractor.

(End of clause)

52.236-22 DESIGN WITHIN FUNDING LIMITATIONS (APR 1984)

(a) The Contractor shall accomplish the design services required under this contract so as to permit the award of a contract, using standard Federal Acquisition Regulation procedures for the construction of the facilities designed at a price that does not exceed the estimated construction contract price as set forth in paragraph (c) below. When bids or proposals for the construction contract are received that exceed the estimated price, the contractor shall perform such redesign and other services as are necessary to permit contract award within the funding limitation. These additional services shall be performed at no increase in the price of this contract. However, the Contractor shall not be required to perform such additional services at no cost to the Government if the unfavorable bids or proposals are the result of conditions beyond its reasonable control.

(b) The Contractor will promptly advise the Contracting Officer if it finds that the project being designed will exceed or is likely to exceed the funding limitations and it is unable to design a usable facility within these limitations. Upon receipt of such information, the Contracting Officer will review the Contractor's revised estimate of construction cost. The Government may, if it determines that the estimated construction contract price set forth in this contract is so low that award of a construction contract not in excess of such estimate is improbable, authorize a change in scope or materials as required to reduce the estimated construction cost to an amount within the estimated construction contract price set forth in paragraph (c) below, or the Government may adjust such estimated construction contract price. When bids or proposals are not solicited or are unreasonably delayed, the Government shall prepare an estimate of constructing the design submitted and such estimate shall be used in lieu of bids or proposals to determine compliance with the funding limitation.

(c) The estimated construction contract price for the project described in this contract is $ **~~$1,000,000 to $5,000,000.~~4.5 million.**

(End of clause)

52.236-23 RESPONSIBILITY OF THE ARCHITECT-ENGINEER CONTRACTOR (APR 1984)

(a) The Contractor shall be responsible for the professional quality, technical accuracy, and the coordination of all designs, drawings, specifications, and other services furnished by the Contractor under this contract. The Contractor shall, without additional compensation, correct or revise any errors or deficiencies in its designs, drawings, specifications, and other services.

(b) Neither the Government's review, approval or acceptance of, nor payment for, the services required under this contract shall be construed to operate as a waiver of any rights under this contract or of any cause of action arising out of the performance of this contract, and the Contractor shall be and remain liable to the Government in accordance with applicable law for all damages to the Government caused by the Contractor's negligent performance of any of the services furnished under this contract.

(c) The rights and remedies of the Government provided for under this contract are in addition to any other rights and remedies provided by law.

(d) If the Contractor is comprised of more than one legal entity, each such entity shall be jointly and severally liable hereunder.

(End of clause)

52.236-26 PRECONSTRUCTION CONFERENCE (FEB 1995)

If the Contracting Officer decides to conduct a preconstruction conference, the successful offeror will be notified and will be required to attend. The Contracting Officer's notification will include specific details regarding the date, time, and location of the conference, any need for attendance by subcontractors, and information regarding the items to be discussed.

(End of clause)

52.242-13 BANKRUPTCY (JUL 1995)

In the event the Contractor enters into proceedings relating to bankruptcy, whether voluntary or involuntary, the Contractor agrees to furnish, by certified mail or electronic commerce method authorized by the contract, written notification of the bankruptcy to the Contracting Officer responsible for administering the contract. This notification shall be furnished within five days of the initiation of the proceedings relating to bankruptcy filing. This notification shall include the date on which the bankruptcy petition was filed, the identity of the court in which the bankruptcy petition was filed, and a listing of Government contract numbers and contracting offices for all Government contracts against which final payment has not been made. This obligation remains in effect until final payment under this contract.

(End of clause)

52.242-14 SUSPENSION OF WORK (APR 1984)

(a) The Contracting Officer may order the Contractor, in writing, to suspend, delay, or interrupt all or any part of the work of this contract for the period of time that the Contracting Officer determines appropriate for the convenience of the Government.

(b) If the performance of all or any part of the work is, for an unreasonable period of time, suspended, delayed, or interrupted (1) by an act of the Contracting Officer in the administration of this contract, or (2) by the Contracting Officer's failure to act within the time specified in this contract (or within a reasonable time if not specified), an adjustment shall be made for any increase in the cost of performance of this contract (excluding profit) necessarily caused by the unreasonable suspension, delay, or interruption, and the contract modified in writing accordingly.

However, no adjustment shall be made under this clause for any suspension, delay, or interruption to the extent that performance would have been so suspended, delayed, or interrupted by any other cause, including the fault or negligence of the Contractor, or for which an equitable adjustment is provided for or excluded under any other term or condition of this contract. (c) A claim under this clause shall not be allowed (1) for any costs incurred more than 20 days before the Contractor shall have notified the Contracting Officer in writing of the act or failure to act involved (but this requirement shall not apply as to a claim resulting from a suspension order), and (2) unless the claim, in an amount stated, is asserted in writing as soon as practicable after the termination of the suspension, delay, or interruption, but not later than the date of final payment under the contract.

(End of clause)

52.243-4 CHANGES (AUG 1987)

(a) The Contracting Officer may, at any time, without notice to the sureties, if any, by written order designated or indicated to be a change order, make changes in the work within the general scope of the contract, including changes--

(1) In the specifications (including drawings and designs);

(2) In the method or manner of performance of the work;

(3) In the Government-furnished facilities, equipment, materials, services, or site; or

(4) Directing acceleration in the performance of the work.

(b) Any other written or oral order (which, as used in this paragraph (b), includes direction, instruction, interpretation, or determination) from the Contracting Officer that causes a change shall be treated as a change order under this clause; provided, that the Contractor gives the Contracting Officer written notice stating

(1) the date, circumstances, and source of the order and

(2) that the Contractor regards the order as a change order.

(c) Except as provided in this clause, no order, statement, or conduct of the Contracting Officer shall be treated as a change under this clause or entitle the Contractor to an equitable adjustment.

(d) If any change under this clause causes an increase or decrease in the Contractor's cost of, or the time required for, the performance of any part of the work under this contract, whether or not changed by any such order, the Contracting Officer shall make an equitable adjustment and modify the contract in writing. However, except for an adjustment based on defective specifications, no adjustment for any change under paragraph (b) of this clause shall be made for any costs incurred more than 20 days before the Contractor gives written notice as required. In the case of defective specifications for which the Government is responsible, the equitable adjustment shall include any increased cost reasonably incurred by the Contractor in attempting to comply with the defective specifications.

(e) The Contractor must assert its right to an adjustment under this clause within 30 days after

(1) receipt of a written change order under paragraph (a) of this clause or (2) the furnishing of a written notice under paragraph (b) of this clause, by submitting to the Contracting Officer a written statement describing the general nature and amount of the proposal, unless this period is extended by the Government. The statement of proposal for adjustment may be included in the notice under paragraph (b) above.

(f) No proposal by the Contractor for an equitable adjustment shall be allowed if asserted after final payment under this contract.

(End of clause)

52.244-5 COMPETITION IN SUBCONTRACTING (DEC 1996)

(a) The Contractor shall select subcontractors (including suppliers) on a competitive basis to the maximum practical extent consistent with the objectives and requirements of the contract.

(b) If the Contractor is an approved mentor under the Department of Defense Pilot Mentor-Protege Program (Pub. L. 101–510, section 831 as amended), the Contractor may award subcontracts under this contract on a noncompetitive basis to its proteges.

(End of clause)

52.244-6 SUBCONTRACTS FOR COMMERCIAL ITEMS (UL 2004)

(a) Definitions.

"Commercial item", has the meaning contained in Federal Acquistion Regulation 2.101, Definitions.

"Subcontract", includes a transfer of commercial items between divisions, subsidiaries, or affiliates of the Contractor or subcontractor at any tier.

(b) To the maximum extent practicable, the Contractor shall incorporate, and require its subcontractors at all tiers to incorporate, commercial items or nondevelopmental items as components of items to be supplied under this contract.

(c) (1) The Contractor shall insert the following clauses in subcontracts for commercial items:

(i) 52.219-8, Utilization of Small Business Concerns (MAY 2004) (15 U.S.C. 637(d)(2) and (3)), in all subcontracts that offer further subcontracting opportunities. If the subcontract (except subcontracts to small business concerns) exceeds $500,000 ($1,000,000 for construction of any public facility), the subcontractor must include 52.219-8 in lower tier subcontracts that offer subcontracting opportunities.

(ii) 52.222-26, Equal Opportunity (Apr 2002) (E.O. 11246).

(iii) 52.222-35, Equal Opportunity for Special Disabled Veterans, Veterans of the Vietnam Era and Other Eligible Veterans (DEC 2001) (38 U.S.C. 4212(a)).

(iv) 52.222-36, Affirmative Action for Workers with Disabilities (JUN 1998) (29 U.S.C. 793).

(v) 52.247-64, Preference for Privately Owned U.S.-Flag Commercial Vessels (APR 2003) (46 U.S.C. Appx 1241 and 10 U.S.C. 2631) (flow down required in accordance with paragraph (d) of FAR clause 52.247-64).

(2) While not required, the Contractor may flow down to subcontracts for commercial items a minimal number of additional clauses necessary to satisfy its contractual obligations.

(d) The Contractor shall include the terms of this clause, including this paragraph (d), in subcontracts awarded under this contract.

(End of clause)

52.246-12 INSPECTION OF CONSTRUCTION (AUG 1996)

(a) Definition. "Work" includes, but is not limited to, materials, workmanship, and manufacture and fabrication of components.

(b) The Contractor shall maintain an adequate inspection system and perform such inspections as will ensure that the work performed under the contract conforms to contract requirements. The Contractor shall maintain complete inspection records and make them available to the Government. All work shall be conducted under the general direction of the Contracting Officer and is subject to Government inspection and test at all places and at all reasonable times before acceptance to ensure strict compliance with the terms of the contract.

(c) Government inspections and tests are for the sole benefit of the Government and do not--

(1) Relieve the Contractor of responsibility for providing adequate quality control measures;

(2) Relieve the Contractor of responsibility for damage to or loss of the material before acceptance;

(3) Constitute or imply acceptance; or

(4) Affect the continuing rights of the Government after acceptance of the completed work under paragraph (i) of this section.

(d) The presence or absence of a Government inspector does not relieve the Contractor from any contract requirement, nor is the inspector authorized to change any term or condition of the specification without the Contracting Officer's written authorization.

(e) The Contractor shall promptly furnish, at no increase in contract price, all facilities, labor, and material reasonably needed for performing such safe and convenient inspections and tests as may be required by the Contracting Officer. The Government may charge to the Contractor any additional cost of inspection or test when work is not ready at the time specified by the Contractor for inspection or test, or when prior rejection makes reinspection or retest necessary. The Government shall perform all inspections and tests in a manner that will not unnecessarily delay the work. Special, full size, and performance tests shall be performed as described in the contract.

(f) The Contractor shall, without charge, replace or correct work found by the Government not to conform to contract requirements, unless in the public interest the Government consents to accept the work with an appropriate adjustment in contract price. The Contractor shall promptly segregate and remove rejected material from the premises.

(g) If the Contractor does not promptly replace or correct rejected work, the Government may (1) by contract or otherwise, replace or correct the work and charge the cost to the Contractor or (2) terminate for default the Contractor's right to proceed.

(h) If, before acceptance of the entire work, the Government decides to examine already completed work by removing it or tearing it out, the Contractor, on request, shall promptly furnish all necessary facilities, labor, and material. If the work is found to be defective or nonconforming in any material respect due to the fault of the Contractor or its subcontractors, the Contractor shall defray the expenses of the examination and of satisfactory reconstruction. However, if the work is found to meet contract requirements, the Contracting Officer shall make an equitable

adjustment for the additional services involved in the examination and reconstruction, including, if completion of the work was thereby delayed, an extension of time.

(i) Unless otherwise specified in the contract, the Government shall accept, as promptly as practicable after completion and inspection, all work required by the contract or that portion of the work the Contracting Officer determines can be accepted separately. Acceptance shall be final and conclusive except for latent defects, fraud, gross mistakes amounting to fraud, or the Government's rights under any warranty or guarantee.

(End of clause)

52.248-3 VALUE ENGINEERING--CONSTRUCTION (FEB 2000)

(a) General. The Contractor is encouraged to develop, prepare, and submit value engineering change proposals (VECP's) voluntarily. The Contractor shall share in any instant contract savings realized from accepted VECP's, in accordance with paragraph (f) below.

(b) Definitions. "Collateral costs," as used in this clause, means agency costs of operation, maintenance, logistic support, or Government-furnished property.

"Collateral savings," as used in this clause, means those measurable net reductions resulting from a VECP in the agency's overall projected collateral costs, exclusive of acquisition savings, whether or not the acquisition cost changes.

"Contractor's development and implementation costs," as used in this clause, means those costs the Contractor incurs on a VECP specifically in developing, testing, preparing, and submitting the VECP, as well as those costs the Contractor incurs to make the contractual changes required by Government acceptance of a VECP.

"Government costs," as used in this clause, means those agency costs that result directly from developing and implementing the VECP, such as any net increases in the cost of testing, operations, maintenance, and logistic support. The term does not include the normal administrative costs of processing the VECP.

"Instant contract savings," as used in this clause, means the estimated reduction in Contractor cost of performance resulting from acceptance of the VECP, minus allowable Contractor's development and implementation costs, including subcontractors' development and implementation costs (see paragraph (h) below).

"Value engineering change proposal (VECP)" means a proposal that--

(1) Requires a change to this, the instant contract, to implement; and

(2) Results in reducing the contract price or estimated cost without impairing essential functions or characteristics; provided, that it does not involve a change--

(i) In deliverable end item quantities only; or

(ii) To the contract type only.

(c) VECP preparation. As a minimum, the Contractor shall include in each VECP the information described in subparagraphs (1) through (7) below. If the proposed change is affected by contractually required configuration management or similar procedures, the instructions in those procedures relating to format, identification, and priority assignment shall govern VECP preparation. The VECP shall include the following:

(1) A description of the difference between the existing contract requirement and that proposed, the comparative advantages and disadvantages of each, a justification when an item's function or characteristics are being altered, and the effect of the change on the end item's performance.

(2) A list and analysis of the contract requirements that must be changed if the VECP is accepted, including any suggested specification revisions.

(3) A separate, detailed cost estimate for

(i) the affected portions of the existing contract requirement and

(ii) the VECP. The cost reduction associated with the VECP shall take into account the Contractor's allowable development and implementation costs, including any amount attributable to subcontracts under paragraph (h) below.

(4) A description and estimate of costs the Government may incur in implementing the VECP, such as test and evaluation and operating and support costs.

(5) A prediction of any effects the proposed change would have on collateral costs to the agency.

(6) A statement of the time by which a contract modification accepting the VECP must be issued in order to achieve the maximum cost reduction, noting any effect on the contract completion time or delivery schedule.

(7) Identification of any previous submissions of the VECP, including the dates submitted, the agencies and contract numbers involved, and previous Government actions, if known.

(d) Submission. The Contractor shall submit VECP's to the Resident Engineer at the worksite, with a copy to the Contracting Officer.

(e) Government action.

(1) The Contracting Officer will notify the Contractor of the status of the VECP within 45 calendar days after the contracting office receives it. If additional time is required, the Contracting Officer will notify the Contractor within the 45-day period and provide the reason for the delay and the expected date of the decision. The Government will process VECP's expeditiously; however, it shall not be liable for any delay in acting upon a VECP.

If the VECP is not accepted, the Contracting Officer will notify the Contractor in writing, explaining the reasons for rejection. The Contractor may withdraw any VECP, in whole or in part, at any time before it is accepted by the Government. The Contracting Officer may require that the Contractor provide written notification before undertaking significant expenditures for VECP effort.

Any VECP may be accepted, in whole or in part, by the Contracting Officer's award of a modification to this contract citing this clause. The Contracting Officer may accept the VECP, even though an agreement on price reduction has not been reached, by issuing the Contractor a notice to proceed with the change. Until a notice to proceed is issued or a contract modification applies a VECP to this contract, the Contractor shall perform in accordance with the existing contract. The decision to accept or reject all or part of any VECP is a unilateral decision made solely at the discretion of the Contracting Officer.

(f) Sharing.

(1) Rates. The Government's share of savings is determined by subtracting Government costs from instant contract savings and multiplying the result by

(i) 45 percent for fixed-price contracts or

(ii) 75 percent for cost-reimbursement contracts.

(2) Payment. Payment of any share due the Contractor for use of a VECP on this contract shall be authorized by a modification to this contract to--

(i) Accept the VECP;

(ii) Reduce the contract price or estimated cost by the amount of instant contract savings; and

(iii) Provide the Contractor's share of savings by adding the amount calculated to the contract price or fee.

(g) Collateral savings. If a VECP is accepted, the Contracting Officer will increase the instant contract amount by 20 percent of any projected collateral savings determined to be realized in a typical year of use after subtracting any Government costs not previously offset. However, the Contractor's share of collateral savings will not exceed the contract's firm-fixed-price or estimated cost, at the time the VECP is accepted, or $100,000, whichever is greater. The Contracting Officer is the sole determiner of the amount of collateral savings.

(h) Subcontracts. The Contractor shall include an appropriate value engineering clause in any subcontract of $50,000 or more and may include one in subcontracts of lesser value. In computing any adjustment in this contract's price under paragraph (f) above, the Contractor's allowable development and implementation costs shall include any subcontractor's allowable development and implementation costs clearly resulting from a VECP accepted by the Government under this contract, but shall exclude any value engineering incentive payments to a subcontractor. The Contractor may choose any arrangement for subcontractor value engineering incentive payments; provided, that these payments shall not reduce the Government's share of the savings resulting from the VECP.

(i) Data. The Contractor may restrict the Government's right to use any part of a VECP or the supporting data by marking the following legend on the affected parts:

"These data, furnished under the Value Engineering-- Construction clause of contract . . . . . , shall not be disclosed outside the Government or duplicated, used, or disclosed, in whole or in part, for any purpose other than to evaluate a value engineering change proposal submitted under the clause. This restriction does not limit the Government's right to use information contained in these data if it has been obtained or is otherwise available from the Contractor or from another source without limitations." If a VECP is accepted, the Contractor hereby grants the Government unlimited rights in the VECP and supporting data, except that, with respect to data qualifying and submitted as limited rights technical data, the Government shall have the rights specified in the contract modification implementing the VECP and shall appropriately mark the data. (The terms "unlimited rights" and "limited rights" are defined in Part 27 of the Federal Acquisition Regulation.)

(End of clause)

52.249-2 TERMINATION FOR CONVENIENCE OF THE GOVERNMENT (FIXED-PRICE) (MAY 2004) - ALTERNATE I (SEP 1996)

(a) The Government may terminate performance of work under this contract in whole or, from time to time, in part if the Contracting Officer determines that a termination is in the Government's interest. The Contracting Officer shall terminate by delivering to the Contractor a Notice of Termination specifying the extent of termination and the effective date.

(b) After receipt of a Notice of Termination, and except as directed by the Contracting Officer, the Contractor shall immediately proceed with the following obligations, regardless of any delay in determining or adjusting any amounts due under this clause:

(1) Stop work as specified in the notice.

(2) Place no further subcontracts or orders (referred to as subcontracts in this clause) for materials, services, or facilities, except as necessary to complete the continued portion of the contract.

(3) Terminate all subcontracts to the extent they relate to the work terminated.

(4) Assign to the Government, as directed by the Contracting Officer, all right, title, and interest of the Contractor under the subcontracts terminated, in which case the Government shall have the right to settle or to pay any termination settlement proposal arising out of those terminations.

(5) With approval or ratification to the extent required by the Contracting Officer, settle all outstanding liabilities and termination settlement proposals arising from the termination of subcontracts; the approval or ratification will be final for purposes of this clause.

(6) As directed by the Contracting Officer, transfer title and deliver to the Government (i) the fabricated or unfabricated parts, work in process, completed work, supplies, and other material produced or acquired for the work terminated, and (ii) the completed or partially completed plans, drawings, information, and other property that, if the contract had been completed, would be required to be furnished to the Government.

(7) Complete performance of the work not terminated.

(8) Take any action that may be necessary, or that the Contracting Officer may direct, for the protection and preservation of the property related to this contract that is in the possession of the Contractor and in which the Government has or may acquire an interest.

(9) Use its best efforts to sell, as directed or authorized by the Contracting Officer, any property of the types referred to in subparagraph (b)(6) of this clause; provided, however, that the Contractor (i) is not required to extend credit to any purchaser and (ii) may acquire the property under the conditions prescribed by, and at prices approved by, the Contracting Officer. The proceeds of any transfer or disposition will be applied to reduce any payments to be made by the Government under this contract, credited to the price or cost of the work, or paid in any other manner directed by the Contracting Officer.

(c) The Contractor shall submit complete termination inventory schedules no later than 120 days from the effective date of termination, unless extended in writing by the Contracting Officer upon written request of the Contractor within this 120-day period.

(d) After expiration of the plant clearance period as defined in Subpart 49.001 of the Federal Acquisition Regulation, the Contractor may submit to the Contracting Officer a list, certified as to quantity and quality, of termination inventory not previously disposed of, excluding items authorized for disposition by the Contracting Officer. The Contractor may request the Government to remove those items or enter into an agreement for their storage. Within 15 days, the Government will accept title to those items and remove them or enter into a storage agreement. The Contracting Officer may verify the list upon removal of the items, or if stored, within 45 days from submission of the list, and shall correct the list, as necessary, before final settlement.

(e) After termination, the Contractor shall submit a final termination settlement proposal to the Contracting Officer in the form and with the certification prescribed by the Contracting Officer. The Contractor shall submit the proposal promptly, but no later than 1 year from the effective date of termination, unless extended in writing by the Contracting Officer upon written request of the Contractor within this 1-year period. However, if the Contracting Officer

determines that the facts justify it, a termination settlement proposal may be received and acted on after 1 year or any extension. If the Contractor fails to submit the proposal within the time allowed, the Contracting Officer may determine, on the basis of information available, the amount, if any, due the Contractor because of the termination and shall pay the amount determined.

(f) Subject to paragraph (e) of this clause, the Contractor and the Contracting Officer may agree upon the whole or any part of the amount to be paid or remaining to be paid because of the termination. The amount may include a reasonable allowance for profit on work done. However, the agreed amount, whether under this paragraph (g) or paragraph (g) of this clause, exclusive of costs shown in subparagraph (g)(3) of this clause, may not exceed the total contract price as reduced by (1) the amount of payments previously made and (2) the contract price of work not terminated. The contract shall be modified, and the Contractor paid the agreed amount. Paragraph (g) of this clause shall not limit, restrict, or affect the amount that may be agreed upon to be paid under this paragraph.

(g) If the Contractor and Contracting Officer fail to agree on the whole amount to be paid the Contractor because of the termination of work, the Contracting Officer shall pay the Contractor the amounts determined as follows, but without duplication of any amounts agreed upon under paragraph (f) of this clause:

(1) For contract work performed before the effective date of termination, the total (without duplication of any items) of--

(i) The cost of this work;

(ii) The cost of settling and paying termination settlement proposals under terminated subcontracts that are properly chargeable to the terminated portion of the contract if not included in subdivision (g)(1)(i) of this clause; and

(iii) A sum, as profit on subdivision (g)(1)(i) of this clause, determined by the Contracting Officer under 49.202 of the Federal Acquisition Regulation, in effect on the date of this contract, to be fair and reasonable; however, if it appears that the Contractor would have sustained a loss on the entire contract had it been completed, the Contracting Officer shall allow no profit under this subdivision (iii) and shall reduce the settlement to reflect the indicated rate of loss.

(2) The reasonable costs of settlement of the work terminated, including--

(i) Accounting, legal, clerical, and other expenses reasonably necessary for the preparation of termination settlement proposals and supporting data;

(ii) The termination and settlement of subcontracts (excluding the amounts of such settlements); and

(iii) Storage, transportation, and other costs incurred, reasonably necessary for the preservation, protection, or disposition of the termination inventory.

(h) Except for normal spoilage, and except to the extent that the Government expressly assumed the risk of loss, the Contracting Officer shall exclude from the amounts payable to the Contractor under paragraph (g) of this clause, the fair value, as determined by the Contracting Officer, of property that is destroyed, lost, stolen, or damaged so as to become undeliverable to the Government or to a buyer.

(i) The cost principles and procedures of Part 31 of the Federal Acquisition Regulation, in effect on the date of this contract, shall govern all costs claimed, agreed to, or determined under this clause.

(j) The Contractor shall have the right of appeal, under the Disputes clause, from any determination made by the Contracting Officer under paragraph (e), (g), or (l) of this clause, except that if the Contractor failed to submit the termination settlement proposal or request for equitable adjustment within the time provided in paragraph (e) or (l), respectively, and failed to request a time extension, there is no right of appeal.

(k) In arriving at the amount due the Contractor under this clause, there shall be deducted--

(1) All unliquidated advance or other payments to the Contractor under the terminated portion of this contract;

(2) Any claim which the Government has against the Contractor under this contract; and

(3) The agreed price for, or the proceeds of sale of, materials, supplies, or other things acquired by the Contractor or sold under the provisions of this clause and not recovered by or credited to the Government.

(l) If the termination is partial, the Contractor may file a proposal with the Contracting Officer for an equitable adjustment of the price(s) of the continued portion of the contract. The Contracting Officer shall make any equitable adjustment agreed upon. Any proposal by the Contractor for an equitable adjustment under this clause shall be requested within 90 days from the effective date of termination unless extended in writing by the Contracting Officer.

(m)(1) The Government may, under the terms and conditions it prescribes, make partial payments and payments against costs incurred by the Contractor for the terminated portion of the contract, if the Contracting Officer believes the total of these payments will not exceed the amount to which the Contractor will be entitled.

(2) If the total payments exceed the amount finally determined to be due, the Contractor shall repay the excess to the Government upon demand, together with interest computed at the rate established by the Secretary of the Treasury under 50 U.S.C. App. 1215(b)(2). Interest shall be computed for the period from the date the excess payment is received by the Contractor to the date the excess is repaid. Interest shall not be charged on any excess payment due to a reduction in the Contractor's termination settlement proposal because of retention or other disposition of termination inventory until 10 days after the date of the retention or disposition, or a later date determined by the Contracting Officer because of the circumstances.

(n) Unless otherwise provided in this contract or by statute, the Contractor shall maintain all records and documents relating to the terminated portion of this contract for 3 years after final settlement. This includes all books and other evidence bearing on the Contractor's costs and expenses under this contract. The Contractor shall make these records and documents available to the Government, at the Contractor's office, at all reasonable times, without any direct charge. If approved by the Contracting Officer, photographs, microphotographs, or other authentic reproductions may be maintained instead of original records and documents.

(End of clause)

52.249-10 DEFAULT (FIXED-PRICE CONSTRUCTION) (APR 1984)

(a) If the Contractor refuses or fails to prosecute the work or any separable part, with the diligence that will insure its completion within the time specified in this contract including any extension, or fails to complete the work within this time, the Government may, by written notice to the Contractor, terminate the right to proceed with the work (or the separable part of the work) that has been delayed. In this event, the Government may take over the work and complete it by contract or otherwise, and may take possession of and use any materials, appliances, and plant on the work site necessary for completing the work. The Contractor and its sureties shall be liable for any damage to the Government resulting from the Contractor's refusal or failure to complete the work within the specified time, whether or not the Contractor's right to proceed with the work is terminated. This liability includes any increased costs incurred by the Government in completing the work.

(b) The Contractor's right to proceed shall not be terminated nor the Contractor charged with damages under this clause, if--

(1) The delay in completing the work arises from unforeseeable causes beyond the control and without the fault or

negligence of the Contractor. Examples of such causes include

(i) acts of God or of the public enemy,

(ii) acts of the Government in either its sovereign or contractual capacity,

(iii) acts of another Contractor in the performance of a contract with the Government,

(iv) fires,

(v) floods,

(vi) epidemics,

(vii) quarantine restrictions,

(viii) strikes,

(ix) freight embargoes,

(x) unusually severe weather, or delays of subcontractors or suppliers at any tier arising from unforeseeable causes beyond the control and without the fault or negligence of both the Contractor and the subcontractors or suppliers; and

(2) The Contractor, within 10 days from the beginning of any delay (unless extended by the Contracting Officer), notifies the Contracting Officer in writing of the causes of delay. The Contracting Officer shall ascertain the facts and the extent of delay. If, in the judgment of the Contracting Officer, the findings of fact warrant such action, the time for completing the work shall be extended. The findings of the Contracting Officer shall be final and conclusive on the parties, but subject to appeal under the Disputes clause.

(c) If, after termination of the Contractor's right to proceed, it is determined that the Contractor was not in default, or that the delay was excusable, the rights and obligations of the parties will be the same as if the termination had been issued for the convenience of the Government.

The rights and remedies of the Government in this clause are in addition to any other rights and remedies provided by law or under this contract.

(End of clause)

52.252-4 ALTERATIONS IN CONTRACT (APR 1984)

Portions of this contract are altered as follows:

(End of clause)

52.253-1 COMPUTER GENERATED FORMS (JAN 1991)

(a) Any data required to be submitted on a Standard or Optional Form prescribed by the Federal Acquisition Regulation (FAR) may be submitted on a computer generated version of the form, provided there is no change to the name, content, or sequence of the data elements on the form, and provided the form carries the Standard or Optional Form number and edition date.

(b) Unless prohibited by agency regulations, any data required to be submitted on an agency unique form prescribed by an agency supplement to the FAR may be submitted on a computer generated version of the form provided there is no change to the name, content, or sequence of the data elements on the form and provided the form carries the agency form number and edition date.

(6) If the Contractor submits a computer generated version of a form that is different than the required form, then the rights and obligations of the parties will be determined based on the content of the required form.

(End of clause)

252.201-7000 CONTRACTING OFFICER'S REPRESENTATIVE (DEC 1991)

(a) "Definition. Contracting officer's representative" means an individual designated in accordance with subsection 201.602-2 of the Defense Federal Acquisition Regulation Supplement and authorized in writing by the contracting officer to perform specific technical or administrative functions.

(b) If the Contracting Officer designates a contracting officer's representative (COR), the Contractor will receive a copy of the written designation. It will specify the extent of the COR's authority to act on behalf of the contracting officer. The COR is not authorized to make any commitments or changes that will affect price, quality, quantity, delivery, or any other term or condition of the contract.

(End of clause)

252.203-7001 PROHIBITION ON PERSONS CONVICTED OF FRAUD OR OTHER DEFENSE-CONTRACT-RELATED FELONIES (MAR 1999)

(a) Definitions. As used in this clause—

(1) “Arising out of a contract with the DoD” means any act in connection with—

(i) Attempting to obtain;

(ii) Obtaining, or

(iii) Performing a contract or first-tier subcontract of any agency, department, or component of the Department of Defense (DoD).

(2) “Conviction of fraud or any other felony” means any conviction for fraud or a felony in violation of state or Federal criminal statutes, whether entered on a verdict or plea, including a plea of *nolo contendere*, for which sentence has been imposed.

(3) “Date of conviction” means the date judgment was entered against the individual.

(b) Any individual who is convicted after September 29, 1988, of fraud or any other felony arising out of a contract with the DoD is prohibited from serving--

(1) In a management or supervisory capacity on any DoD contract or first-tier subcontract;

(2) On the board of directors of any DoD contractor or first-tier subcontractor;

(3) As a consultant, agent, or representative for any DoD contractor or first-tier subcontractor; or

(4) In any other capacity with the authority to influence, advise, or control the decisions of any DoD contractor or subcontractor with regard to any DoD contract or first-tier subcontract.

(c) Unless waived, the prohibition in paragraph (b) of this clause applies for not less than 5 years from the date of conviction.

(d) 10 U.S.C. 2408 provides that a defense contractor or first-tier subcontractor shall be subject to a criminal penalty of not more than $500,000 if convicted of knowingly—

(1) Employing a person under a prohibition specified in paragraph (b) of this clause; or

(2) Allowing such a person to serve on the board of directors of the contractor or first-tier subcontractor.

(e) In addition to the criminal penalties contained in 10 U.S.C. 2408, the Government may consider other available remedies, such as—

(1) Suspension or debarment;

(2) Cancellation of the contract at no cost to the Government; or

(3) Termination of the contract for default.

(f) The Contractor may submit written requests for waiver of the prohibition in paragraph (b) of this clause to the Contracting Officer. Requests shall clearly identify—

(1) The person involved;

(2) The nature of the conviction and resultant sentence or punishment imposed;

(3) The reasons for the requested waiver; and

(4) An explanation of why a waiver is in the interest of national security.

(g) The Contractor agrees to include the substance of this clause, appropriately modified to reflect the identity and relationship of the parties, in all first-tier subcontracts exceeding the simplified acquisition threshold in Part 2 of the Federal Acquisition Regulation, except those for commercial items or components.

(h) Pursuant to 10 U.S.C. 2408(c), defense contractors and subcontractors may obtain information as to whether a particular person has been convicted of fraud or any other felony arising out of a contract with the DoD by contacting The Office of Justice Programs, The Denial of Federal Benefits Office, U.S. Department of Justice, telephone (202) 616-3507.

(End of clause)

252.203-7002 DISPLAY OF DOD HOTLINE POSTER (DEC 1991)

(a) The Contractor shall display prominently in common work areas within business segments performing work under Department of Defense (DoD) contracts, DoD Hotline Posters prepared by the DoD Office of the Inspector General.

(b) DoD Hotline Posters may be obtained from the DoD Inspector General, ATTN: Defense Hotline, 400 Army Navy Drive, Washington, DC 22202-2884.

(7) The Contractor need not comply with paragraph (a) of this clause if it has established a mechanism, such as a hotline, by which employees may report suspected instances of improper conduct, and instructions that encourage employees to make such reports.

(End of clause)

252.204-7000 DISCLOSURE OF INFORMATION (DEC 1991)

(a) The Contractor shall not release to anyone outside the Contractor's organization any unclassified information, regardless of medium (e.g., film, tape, document), pertaining to any part of this contract or any program related to this contract, unless--

(1) The Contracting Officer has given prior written approval; or

(2) The information is otherwise in the public domain before the date of release.

(b) Requests for approval shall identify the specific information to be released, the medium to be used, and the purpose for the release. The Contractor shall submit its request to the Contracting Officer at least 45 days before the proposed date for release.

(c) The Contractor agrees to include a similar requirement in each subcontract under this contract. Subcontractors shall submit requests for authorization to release through the prime contractor to the Contracting Officer.

(End of clause)

252.204-7003 CONTROL OF GOVERNMENT PERSONNEL WORK PRODUCT (APR 1992)

The Contractor's procedures for protecting against unauthorized disclosure of information shall not require Department of Defense employees or members of the Armed Forces to relinquish control of their work products, whether classified or not, to the contractor.

(End of clause)

252.204-7004 REQUIRED CENTRAL CONTRACTOR REGISTRATION ALTERNATE A (NOV 2003)

(a) Definitions. As used in this clause--

“Central Contractor Registration (CCR) database” means the primary Government repository for contractor information required for the conduct of business with the Government.

“Commercial and Government Entity (CAGE) code” means--

(1) A code assigned by the Defense Logistics Information Service (DLIS) to identify a commercial or Government entity; or

(2) A code assigned by a member of the North Atlantic Treaty Organization that DLIS records and maintains in the CAGE master file. This type of code is known as an “NCAGE code.”

“Data Universal Numbering System (DUNS) number” means the 9-digit number assigned by Dun and Bradstreet, Inc. (D&B) to identify unique business entities.

“Data Universal Numbering System +4 (DUNS+4) number” means the DUNS number assigned by D&B plus a 4-character suffix that may be assigned by a business concern. (D&B has no affiliation with this 4-character suffix.) This 4-character suffix may be assigned at the discretion of the business concern to establish additional CCR records for identifying alternative Electronic Funds Transfer (EFT) accounts (see Subpart 32.11 of the Federal Acquisition Regulation) for the same parent concern.

“Registered in the CCR database” means that--

(1) The Contractor has entered all mandatory information, including the DUNS number or the DUNS+4 number, into the CCR database;

(2) The Contractor's CAGE code is in the CCR database; and

(3) The Government has validated all mandatory data fields and has marked the records “Active.”

(b)(1) By submission of an offer, the offeror acknowledges the requirement that a prospective awardee shall be registered in the CCR database prior to award, during performance, and through final payment of any contract, basic agreement, basic ordering agreement, or blanket purchasing agreement resulting from this solicitation.

(2) The offeror shall enter, in the block with its name and address on the cover page of its offer, the annotation “DUNS” or “DUNS +4” followed by the DUNS or DUNS +4 number that identifies the offeror's name and address exactly as stated in the offer. The DUNS number will be used by the Contracting Officer to verify that the offeror is registered in the CCR database.

(c) If the offeror does not have a DUNS number, it should contact Dun and Bradstreet directly to obtain one.

(1) An offeror may obtain a DUNS number--

(i) If located within the United States, by calling Dun and Bradstreet at 1-866-705-5711 or via the Internet at http://www.dnb.com; or

(ii) If located outside the United States, by contacting the local Dun and Bradstreet office.

(2) The offeror should be prepared to provide the following information:

(i) Company legal business.

(ii) Tradestyle, doing business, or other name by which your entity is commonly recognized.

(iii) Company Physical Street Address, City, State, and Zip Code.

(iv) Company Mailing Address, City, State and Zip Code (if separate from physical).

(v) Company Telephone Number.

(vi) Date the company was started.

(vii) Number of employees at your location.

(viii) Chief executive officer/key manager.

(ix) Line of business (industry).

(x) Company Headquarters name and address (reporting relationship within your entity).

(d) If the Offeror does not become registered in the CCR database in the time prescribed by the Contracting Officer, the Contracting Officer will proceed to award to the next otherwise successful registered Offeror.

(e) Processing time, which normally takes 48 hours, should be taken into consideration when registering. Offerors who are not registered should consider applying for registration immediately upon receipt of this solicitation.

(f) The Contractor is responsible for the accuracy and completeness of the data within the CCR database, and for any liability resulting from the Government's reliance on inaccurate or incomplete data. To remain registered in the CCR database after the initial registration, the Contractor is required to review and update on an annual basis from the date of initial registration or subsequent updates its information in the CCR database to ensure it is current, accurate and complete. Updating information in the CCR does not alter the terms and conditions of this contract and is not a substitute for a properly executed contractual document.

(g)(1)(i) If a Contractor has legally changed its business name, “doing business as” name, or division name (whichever is shown on the contract), or has transferred the assets used in performing the contract, but has not completed the necessary requirements regarding novation and change-of-name agreements in Subpart 42.12, the Contractor shall provide the responsible Contracting Officer a minimum of one business day's written notification of its intention to (A) change the name in the CCR database; (B) comply with the requirements of Subpart 42.12 of the FAR; and (C) agree in writing to the timeline and procedures specified by the responsible Contracting Officer. The Contractor must provide with the notification sufficient documentation to support the legally changed name.

(ii) If the Contractor fails to comply with the requirements of paragraph (g)(1)(i) of this clause, or fails to perform the agreement at paragraph (g)(1)(i)(C) of this clause, and, in the absence of a properly executed novation or change-of-name agreement, the CCR information that shows the Contractor to be other than the Contractor indicated in the contract will be considered to be incorrect information within the meaning of the “Suspension of Payment” paragraph of the electronic funds transfer (EFT) clause of this contract.

(2) The Contractor shall not change the name or address for EFT payments or manual payments, as appropriate, in the CCR record to reflect an assignee for the purpose of assignment of claims (see FAR Subpart 32.8, Assignment of Claims). Assignees shall be separately registered in the CCR database. Information provided to the Contractor's CCR record that indicates payments, including those made by EFT, to an ultimate recipient other than that Contractor will be considered to be incorrect information within the meaning of the “Suspension of payment” paragraph of the EFT clause of this contract.

(h) Offerors and Contractors may obtain information on registration and annual confirmation requirements via the internet at http://www.ccr.gov or by calling 1-888-227-2423, or 269-961-5757.

(End of clause)

252.205-7000 PROVISION OF INFORMATION TO COOPERATIVE AGREEMENT HOLDERS (DEC 1991)

(a) Definition.

"Cooperative agreement holder" means a State or local government; a private, nonprofit organization; a tribal organization (as defined in section 4(c) of the Indian Self-Determination and Education Assistance Act (Pub. L. 93-268; 25 U.S.C. 450 (c))); or an economic enterprise (as defined in section 3(e) of the Indian Financing Act of 1974 (Pub. L. 93-362; 25 U.S.C. 1452(e))) whether such economic enterprise is organized for profit or nonprofit purposes; which has an agreement with the Defense Logistics Agency to furnish procurement technical assistance to business entities.

(b) The Contractor shall provide cooperative agreement holders, upon their request, with a list of those appropriate employees or offices responsible for entering into subcontracts under defense contracts. The list shall include the business address, telephone number, and area of responsibility of each employee or office.

(c) The Contractor need not provide the listing to a particular cooperative agreement holder more frequently than once a year.

(End of clause)

252.209-7004 SUBCONTRACTING WITH FIRMS THAT ARE OWNED OR CONTROLLED BY THE GOVERNMENT OF A TERRORIST COUNTRY (MAR 1998)

(a) Unless the Government determines that there is a compelling reason to do so, the Contractor shall not enter into any subcontract in excess of $25,000 with a firm, or subsidiary of a firm, that is identified, on the List of Parties Excluded from Federal Procurement and Nonprocurement Programs, as being ineligible for the award of Defense contracts or subcontracts because it is owned or controlled by the government of a terrorist country.

(b) A corporate officer or a designee of the Contractor shall notify the Contracting Officer, in writing, before entering into a subcontract with a party that is identified, on the List of Parties Excluded from Federal Procurement and Nonprocurement Programs, as being ineligible for the award of Defense contracts or subcontracts because it is owned or controlled by the government of a terrorist country. The notice must include the name of the proposed subcontractor notwithstanding its inclusion on the List of Parties Excluded From Federal Procurement and Nonprocurement Programs.

(End of clause)

252.215-7000 PRICING ADJUSTMENTS (DEC 1991)

The term "pricing adjustment," as used in paragraph (a) of the clauses entitled "Price Reduction for Defective Cost or Pricing Data - Modifications," "Subcontractor Cost or Pricing Data," and "Subcontractor Cost or Pricing Data - Modifications," means the aggregate increases and/or decreases in cost plus applicable profits.

(End of clause)

252.219-7003 SMALL, SMALL DISADVANTAGED AND WOMEN-OWNED SMALL BUSINESS SUBCONTRACTING PLAN (DOD CONTRACTS) (APR. 1996)

This clause supplements the Federal Acquisition Regulation 52.219-9, Small, Small Disadvantaged and Women-Owned Small Business Subcontracting Plan, clause of this contract.

(a) *Definitions. Historically black colleges and universities,* as used in this clause, means institutions determined by the Secretary of Education to meet the requirements of 34 CFR 608.2. The term also means any nonprofit research institution that was an integral part of such a college or university before November 14, 1986.

Minority institutions, as used in this clause, means institutions meeting the requirements of section 1046(3) of the Higher Education Act of 1965 (20 U.S.C. 1135d-5(3)). The term also includes Hispanic-serving institutions as defined in section 316(b)(1) of such Act (20 U.S.C. 1059c(b)(1)).

(b) Except for company or division-wide commercial items subcontracting plans, the term *small disadvantaged business,* when used in the FAR 52.219-9 clause, includes historically black colleges and universities and minority institutions, in addition to small disadvantaged business concerns.

(c) Work under the contract or its subcontracts shall be credited toward meeting the small disadvantaged business concern goal required by paragraph (d) of the FAR 52.219-9 clause when:

(1) It is performed on Indian lands or in joint venture with an Indian tribe or a tribally-owned corporation, and

(2) It meets the requirements of 10 U.S.C. 2323a.

(d) Subcontracts awarded to workshops approved by the Committee for Purchase from People Who are Blind or Severely Disabled (41 U.S.C. 46-48), may be counted toward the Contractor's small business subcontracting goal.

(e) A mentor firm, under the Pilot Mentor-Protege Program established under Section 831 of Pub. L. 101-510, as amended, may count toward its small disadvantaged business goal, subcontracts awarded--

(f) The master plan approval referred to in paragraph (f) of the FAR 52.219-9 clause is approval by the Contractor's cognizant contract administration activity.

(g) In those subcontracting plans which specifically identify small, small disadvantaged, and women-owned small businesses, the Contractor shall notify the Administrative Contracting Officer of any substitutions of firms that are not small, small disadvantaged, or women-owned small businesses for the firms listed in the subcontracting plan. Notifications shall be in writing and shall occur within a reasonable period of time after award of the subcontract. Contractor-specified formats shall be acceptable.

(End of clause)

252.219-7009 SECTION 8(A) DIRECT AWARD (MAR 2002)

(a) This contract is issued as a direct award between the contracting office and the 8(a) Contractor pursuant to the Partnership Agreement dated February 1, 2002, between the Small Business Administration (SBA) and the Department of Defense. Accordingly, the SBA, even if not identified in Section A of this contract, is the prime contractor and retains responsibility for 8(a) certification, for 8(a) eligibility determinations and related issues, and for providing counseling and assistance to the 8(a) Contractor under the 8(a) Program. The cognizant SBA district office is:

U.S. Small Business Administration
Alaska District Office
510 L Street, Suite 310
Anchorage, Alaska 99501

(b) The contracting office is responsible for administering the contract and for taking any action on behalf of the Government under the terms and conditions of the contract; provided that the contracting office shall give advance notice to the SBA before it issues a final notice terminating performance, either in whole or in part, under the contract. The contracting office also shall coordinate with the SBA prior to processing any novation agreement. The contracting office may assign contract administration functions to a contract administration office.

(c) The Contractor agrees that--

(1) It will notify the Contracting Officer, simultaneous with its notification to the SBA (as required by SBA's 8(a) regulations at 13 CFR 124.308), when the owner or owners upon whom 8(a) eligibility is based plan to relinquish ownership or control of the concern. Consistent with Section 407 of Pub. L. 100-656, transfer of ownership or control shall result in termination of the contract for convenience, unless the SBA waives the requirement for termination prior to the actual relinquishing of ownership and control; and

(2) It will not subcontract the performance of any of the requirements of this contract without the prior written approval of the SBA and the Contracting Officer.

(End of Clause)

252.219-7010 ALTERNATE A (JUN 1998)

(a) Offers are solicited only from small business concerns expressly certified by the Small Business Administration (SBA) for participation in the SBA's 8(a) Program and which meet the following criteria at the time of submission of offer--

(1) The Offeror is in conformance with the 8(a) limitation set forth in its approved business plan; and

(2) The Offeror is in conformance with the Business Activity Targets set forth in its approved business plan or any remedial action directed by the SBA.

(b) By submission of its offer, the Offeror represents that it meets all of the criteria set forth in paragraph (a) of this clause.

(c) Any award resulting from this solicitation will be made directly by the Contracting Officer to the successful 8(a) offeror selected through the evaluation criteria set forth in this solicitation.

(d)(1) Agreement. A small business concern submitting an offer in its own name agrees to furnish, in performing the contract, only end items manufactured or produced by small business concerns in the United States. The term "United States" includes its territories and possessions, the Commonwealth of Puerto Rico, the trust territory of the Pacific Islands, and the District of Columbia. If this procurement is processed under simplified acquisition procedures and the total amount of this contract does not exceed $25,000, a small business concern may furnish the product of any domestic firm. This subparagraph does not apply in connection with construction or service contracts.

(2) The **contractor** will notify **Cheryl Anderson, Chief, Contracting Division, CENWS-CT-CB, Post Office Box 3755, Seattle, Washington 98124-3755** in writing immediately upon entering an agreement (either oral or written) to transfer all or part of its stock or other ownership interest to any other party.

(End of clause)

252.222-7000 RESTRICTIONS ON EMPLOYMENT OF PERSONNEL (MAR 2000)

(a) The Contractor shall employ, for the purpose of performing that portion of the contract work in **Alaska**, individuals who are residents thereof and who, in the case of any craft or trade, possess or would be able to acquire promptly the necessary skills to perform the contract.

(b) The Contractor shall insert the substance of this clause, including this paragraph (b), in each subcontract awarded under this contract.

(End of clause)

252.223-7004 DRUG-FREE WORK FORCE (SEP 1988)

(a) Definitions.

(1) "Employee in a sensitive position," as used in this clause, means an employee who has been granted access to classified information; or employees in other positions that the Contractor determines involve national security; health or safety, or functions other than the foregoing requiring a high degree of trust and confidence.

(2) "Illegal drugs," as used in this clause, means controlled substances included in Schedules I and II, as defined by section 802(6) of title 21 of the United States Code, the possession of which is unlawful under chapter 13 of that Title. The term "illegal drugs" does not mean the use of a controlled substance pursuant to a valid prescription or other uses authorized by law.

(b) The Contractor agrees to institute and maintain a program for achieving the objective of a drug-free work force. While this clause defines criteria for such a program, contractors are encouraged to implement alternative approaches comparable to the criteria in paragraph (c) that are designed to achieve the objectives of this clause.

(c) Contractor programs shall include the following, or appropriate alternatives:

(1) Employee assistance programs emphasizing high level direction, education, counseling, rehabilitation, and coordination with available community resources;

(2) Supervisory training to assist in identifying and addressing illegal drug use by Contractor employees;

(3) Provision for self-referrals as well as supervisory referrals to treatment with maximum respect for individual confidentiality consistent with safety and security issues;

(4) Provision for identifying illegal drug users, including testing on a controlled and carefully monitored basis. Employee drug testing programs shall be established taking account of the following:

(i) The Contractor shall establish a program that provides for testing for the use of illegal drugs by employees in sensitive positions. The extent of and criteria for such testing shall be determined by the Contractor based on considerations that include the nature of the work being performed under the contract, the employee's duties, and efficient use of Contractor resources, and the risks to health, safety, or national security that could result from the failure of an employee adequately to discharge his or her position.

(ii) In addition, the Contractor may establish a program for employee drug testing--

(A) When there is a reasonable suspicion that an employee uses illegal drugs; or

(B) When an employees has been involved in an accident or unsafe practice;

(C) As part of or as a follow-up to counseling or rehabilitation for illegal drug use;

(D) As part of a voluntary employee drug testing program.

(iii) The Contractor may establish a program to test applicants for employment for illegal drug use.

(iv) For the purpose of administering this clause, testing for illegal drugs may be limited to those substances for which testing is prescribed by section 2..1 of subpart B of the "Mandatory Guidelines for Federal Workplace Drug Testing Programs" (53 FR 11980 (April 11, 1988), issued by the Department of Health and Human Services.

(d) Contractors shall adopt appropriate personnel procedures to deal with employees who are found to be using drugs illegally. Contractors shall not allow any employee to remain on duty or perform in a sensitive position who is found to use illegal drugs until such times as the Contractor, in accordance with procedures established by the Contractor, determines that the employee may perform in such a position.

(e) The provisions of this clause pertaining to drug testing program shall not apply to the extent that are inconsistent with state or local law, or with an existing collective bargaining agreement; provided that with respect to the latter, the Contractor agrees those issues that are in conflict will be a subject of negotiation at the next collective bargaining session.

(End of clause)

252.223-7006 PROHIBITION ON STORAGE AND DISPOSAL OF TOXIC AND HAZARDOUS MATERIALS (APR 1993)

(a) "Definitions".

As used in this clause --

(1) "Storage" means a non-transitory, semi-permanent or permanent holding, placement, or leaving of material. It does not include a temporary accumulation of a limited quantity of a material used in or a waste generated or resulting from authorized activities, such as servicing, maintenance, or repair of Department of Defense (DoD) items, equipment, or facilities.

(2) "Toxic or hazardous materials" means:

(i) Materials referred to in section 101(14) of the Comprehensive Environmental Response, Compensation, and Liability Act (CERCLA) of 1980 (42 U.S.C. 9601(14)) and materials designated under section 102 of CERCLA (42 U.S.C. 9602) (40 CFR part 302);

(ii) Materials that are of an explosive, flammable, or pyrotechnic nature; or

(iii) Materials otherwise identified by the Secretary of Defense as specified in DoD regulations.

(b) In accordance with 10 U.S.C. 2692, the Contractor is prohibited from storing or disposing of non-DoD-owned toxic or hazardous materials on a DoD installation, except to the extent authorized by a statutory exception to 10 U.S.C. 2692 or as authorized by the Secretary of Defense or his designee.

(End of clause)

252.225-7031 SECONDARY ARAB BOYCOTT OF ISRAEL (APR 2003)

(a) Definitions. As used in this provision--

(1) Foreign person means any person (including any individual, partnership, corporation, or other form of association) other than a United States person.

(2) United States person is defined in 50 U.S.C. App. 2415(2) and means--

(i) Any United States resident or national (other than an individual resident outside the United States who is employed by other than a United States person);

(ii) Any domestic concern (including any permanent domestic establishment of any foreign concern); and

(iii) Any foreign subsidiary or affiliate (including any permanent foreign establishment) of any domestic concern that is controlled in fact by such domestic concern.

(b) Certification. If the offeror is a foreign person, the offeror certifies, by submission of an offer, that it--

(1) Does not comply with the Secondary Arab Boycott of Israel; and

(2) Is not taking or knowingly agreeing to take any action, with respect to the Secondary Boycott of Israel by Arab countries, which 50 U.S.C. App. 2407(a) prohibits a United States person from taking.

(End of provision)

252.226-7001 UTILIZATION OF INDIAN ORGANIZATIONS AND INDIAN-OWNED ECONOMIC ENTERPRISES, AND NATIVE HAWAIIAN SMALL BUSINESS CONCERNS (OCT 2003)

(a) Definitions. As used in this clause--

Indian means any person who is a member of any Indian tribe, band, group, pueblo, or community that is recognized by the Federal Government as eligible for services from the Bureau of Indian Affairs (BIA) in accordance with 25 U.S.C. 1452(c) and any ``Native" as defined in the Alaska Native Claims Settlement Act (43 U.S.C. 1601).

Indian organization means the governing body of any Indian tribe or entity established or recognized by the governing body of an Indian tribe for the purposes of 25 U.S.C. chapter 17.

Indian-owned economic enterprise means any Indian-owned (as determined by the Secretary of the Interior) commercial, industrial, or business activity established or organized for the purpose of profit, provided that Indian ownership constitutes not less than 51 percent of the enterprise.

Indian tribe means any Indian tribe, band, group, pueblo, or community, including native villages and native groups (including corporations organized by Kenai, Juneau, Sitka, and Kodiak) as defined in the Alaska Native Claims

Settlement Act, that is recognized by the Federal Government as eligible for services from BIA in accordance with 25 U.S.C. 1452(c).

Interested party means a contractor or an actual or prospective offeror whose direct economic interest would be affected by the award of a subcontract or by the failure to award a subcontract.

Native Hawaiian small business concern means an entity that is --

(1) A small business concern as defined in section 3 of the Small Business Act (15 U.S.C. 632) and relevant implementing regulations; and

(2) Owned and controlled by a Native Hawaiian as defined in 25 U.S.C. 4221(9).

(b) The Contractor shall use its best efforts to give Indian organizations, Indian-owned economic enterprises, and Native Hawaiian small business concerns the maximum practicable opportunity to participate in the subcontracts it awards, to the fullest extent consistent with efficient performance of the contract.

(c) The Contracting Officer and the Contractor, acting in good faith, may rely on the representation of an Indian organization, Indian-owned economic enterprise, or Native Hawaiian small business concern as to its eligibility, unless an interested party challenges its status or the Contracting Officer has independent reason to question that status.

(d) In the event of a challenge to the representation of a subcontractor, the Contracting Officer will refer the matter to--

(1) For matters relating to Indian organizations or Indian-owned economic enterprises: U.S. Department of the Interior, Bureau of Indian Affairs, Attn: Chief, Division of Contracting and Grants Administration, 1849 C Street NW, MS-2626-MIB, Washington, DC 20240-4000. The BIA will determine the eligibility and will notify the Contracting Officer.

(2) For matters relating to Native Hawaiian small business concerns: Department of Hawaiian Home Lands, PO Box 1879, Honolulu, HI 96805. The Department of Hawaiian Home Lands will determine the eligibility and will notify the Contracting Officer.

(e) No incentive payment will be made--

(1) While a challenge is pending; or

(2) If a subcontractor is determined to be an ineligible participant.

(f)(1) The Contractor, on its own behalf or on behalf of a subcontractor at any tier, may request an incentive payment in accordance with this clause.

(2) The incentive amount that may be requested is 5 percent of the estimated cost, target cost, or fixed price included in the subcontract at the time of award to the Indian organization, Indian-owned economic enterprise, or Native Hawaiian small business concern.

(3) In the case of a subcontract for commercial items, the Contractor may receive an incentive payment only if the subcontracted items are produced or manufactured in whole or in part by an Indian organization, Indian-owned economic enterprise, or Native Hawaiian small business concern.

(4) The Contractor has the burden of proving the amount claimed and shall assert its request for an incentive payment prior to completion of contract performance.

(5) The Contracting Officer, subject to the terms and conditions of the contract and the availability of funds, will authorize an incentive payment of 5 percent of the estimated cost, target cost, or fixed price included in the subcontract awarded to the Indian organization, Indian-owned economic enterprise, or Native Hawaiian small business concern.

(6) If the Contractor requests and receives an incentive payment on behalf of a subcontractor, the Contractor is obligated to pay the subcontractor the incentive amount.

(g) The Contractor shall insert the substance of this clause, including this paragraph (g), in all subcontracts exceeding $500,000 for which further subcontracting opportunities may exist.

(End of clause)

252.227-7022 GOVERNMENT RIGHTS (UNLIMITED) (MAR 1979)

The Government shall have unlimited rights, in all drawings, designs, specifications, notes and other works developed in the performance of this contract, including the right to use same on any other Government design or construction without additional compensation to the Contractor. The Contractor hereby grants to the Government a paid-up license throughout the world to all such works to which he may assert or establish any claim under design patent or copyright laws. The Contractor for a period of three (3) years after completion of the project agrees to furnish the original or copies of all such works on the request of the Contracting Officer.

(End of clause)

252.227-7023 DRAWINGS AND OTHER DATA TO BECOME PROPERTY OF GOVERNMENT. (MAR 1979)

All designs, drawings, specifications, notes and other works developed in the performance of this contract shall become the sole property of the Government and may be used on any other design or construction without additional compensation to the Contractor. The Government shall be considered the "person for whom the work was prepared" for the purpose of authorship in any copyrightable work under 17 U.S.C. 201(b). With respect thereto, the Contractor agrees not to assert or authorize others to assert any rights nor establish any claim under the design patent or copyright laws. The Contractor for a period of three (3) years after completion of the project agrees to furnish all retained works on the request of the Contracting Officer. Unless otherwise provided in this contract, the Contractor shall have the right to retain copies of all works beyond such period.

(End of clause)

252.227-7033 RIGHTS IN SHOP DRAWINGS (APR 1966)

(a) Shop drawings for construction means drawings, submitted to the Government by the Construction Contractor, subcontractor or any lower-tier subcontractor pursuant to a construction contract, showing in detail (i) the proposed fabrication and assembly of structural elements and (ii) the installation (i.e., form, fit, and attachment details) of materials or equipment. The Government may duplicate, use, and disclose in any manner and for any purpose shop drawings delivered under this contract.

(b) This clause, including this paragraph (b), shall be included in all subcontracts hereunder at any tier.

252.231-7000 SUPPLEMENTAL COST PRINCIPLES (DEC 1991)

When the allowability of costs under this contract is determined in accordance with part 31 of the Federal Acquisition Regulation (FAR), allowability shall also be determined in accordance with part 231 of the Defense FAR Supplement, in effect on the date of this contract.

(End of clause)

252.236-7000 MODIFICATION PROPOSALS - PRICE BREAKDOWN. (DEC 1991)

(a) The Contractor shall furnish a price breakdown, itemized as required and within the time specified by the Contracting Officer, with any proposal for a contract modification.

(b) The price breakdown --

(1) Must include sufficient detail to permit an analysis of profit, and of all costs for --

(i) Material;

(ii) Labor;

(iii) Equipment;

(iv) Subcontracts; and

(v) Overhead; and

(2) Must cover all work involved in the modification, whether the work was deleted, added, or changed.

(c) The Contractor shall provide similar price breakdowns to support any amounts claimed for subcontracts.

(d) The Contractor's proposal shall include a justification for any time extension proposed.

252.236-7001 CONTRACT DRAWINGS, MAPS, AND SPECIFICATIONS (AUG 2000)

(a) The Government will provide to the Contractor, without charge, one set of contract drawings and specifications, except publications incorporated into the technical provisions by reference, in electronic or paper media as chosen by the Contracting Officer.

(b) The Contractor shall--

(1) Check all drawings furnished immediately upon receipt;

(2) Compare all drawings and verify the figures before laying out the work;

(3) Promptly notify the Contracting Officer of any discrepancies;

(4) Be responsible for any errors that might have been avoided by complying with this paragraph (b); and

(5) Reproduce and print contract drawings and specifications as needed.

(c) In general--

(1) Large-scale drawings shall govern small-scale drawings; and

(2) The Contractor shall follow figures marked on drawings in preference to scale measurements.

(d) Omissions from the drawings or specifications or the misdescription of details of work that are manifestly necessary to carry out the intent of the drawings and specifications, or that are customarily performed, shall not relieve the Contractor from performing such omitted or misdescribed details of the work. The Contractor shall perform such details as if fully and correctly set forth and described in the drawings and specifications.

(e) The work shall conform to the specifications and the contract drawings identified on the following index of drawings:

Title File Drawing No.

See the sheet index on plate number G-1 Title and Area Maps

DETAILS BOUND IN THE SPECIFICATIONS

Drawing No.	Sheet No.	Title	Date
		SECTION 01000 – STATEMENT OF WORK	
	(8)	Conceptual Drawing of Gates/Bollards Needed Along Glenn Highway	
	01000-14	Approximate Location and Distances for Fence and Wetland Intersection	21JUN04
	01000-15	Cantonment Fencing and Combined Security Fence Option 0010	26AUG04
		DRAWING REVISIONS BY NOTATION	

Drawing Sheet 2: Delete last sentence of Note 13. Replace with "Of the total fence alighment length, approximately 4200 meters of it will occur in wetlands. See Approximate Location and Distances for Fence and Wetland Intersection map at the end of Specification Section 01000 SCOPE of WORK.

Drawing Sheet 23, CORNER BRACING DETAIL (CFS): Change pipe rail spacing: Change "510mm" to 560mm". Change "965mm" to "1016mm".

		SECTION 01581 – PROJECT MARKER	
40-05-11	1	U.S. Army, Pacific Ocean Division, Alaska District	
		SECTION 02821 – FENCING	
	1	Moose Fence Details	1988

DRAWING REVISIONS BY NOTATION

Plate C-19, Combination Security Fence (CSF) and Pipe Rail Fence detail: Change combination security fence spacing

for the two lower pipe rails to be the same as that for the pipe rail fence. Change 510 mm to 560 mm. Change 956 mm to 1016 mm.

Plate C-21, Elevation CSF Double Swing Gate detail: The CSF gate and fence are to have two horizontal pipe rails, not three. Rail height and spacing shall be as shown on the revised Combination Security Fence and Pipe Rail Fence detail on Plate C-19.

(End of clause)

252.242-7000 POSTAWARD CONFERENCE (DEC 1991)

The Contractor agrees to attend any postaward conference convened by the contracting activity or contract administration office in accordance with Federal Acquisition Regulation subpart 42.5.

(End of clause)

252.243-7001 PRICING OF CONTRACT MODIFICATIONS (DEC 1991)

When costs are a factor in any price adjustment under this contract, the contract cost principles and procedures in FAR part 31 and DFARS part 231, in effect on the date of this contract, apply.

252.243-7002 REQUESTS FOR EQUITABLE ADJUSTMENT (MAR 1998)

(a) The amount of any request for equitable adjustment to contract terms shall accurately reflect the contract adjustment for which the Contractor believes the Government is liable. The request shall include only costs for performing the change, and shall not include any costs that already have been reimbursed or that have been separately claimed. All indirect costs included in the request shall be properly allocable to the change in accordance with applicable acquisition regulations.

(b) In accordance with 10 U.S.C. 2410(a), any request for equitable adjustment to contract terms that exceeds the simplified acquisition threshold shall bear, at the time of submission, the following certificate executed by an individual authorized to certify the request on behalf of the Contractor:

I certify that the request is made in good faith, and that the supporting data are accurate and complete to the best of my knowledge and belief.

(Official's Name)

(Title)

(c) The certification in paragraph (b) of this clause requires full disclosure of all relevant facts, including--

(1) Cost or pricing data if required in accordance with subsection 15.403-4 of the Federal Acquisition Regulation (FAR); and

(2) Information other than cost or pricing data, in accordance with subsection 15.403-3 of the FAR, including actual cost data and data to support any estimated costs, even if cost or pricing data are not required.

(d) The certification requirement in paragraph (b) of this clause does not apply to----

(1) Requests for routine contract payments; for example, requests for payment for accepted supplies and services, routine vouchers under a cost-reimbursement type contract, or progress payment invoices; or

(2) Final adjustment under an incentive provision of the contract.

252.244-7000 SUBCONTRACTS FOR COMMERCIAL ITEMS AND COMMERCIAL COMPONENTS (DOD) (MAR 2000)

In addition to the clauses listed in paragraph (c) of the Subcontracts for Commercial Items and Commercial Components clause of this contract (Federal Acquisition Regulation 52.244-6), the Contractor shall include the terms of the following clauses, if applicable, in subcontracts for commercial items or commercial components, awarded at any tier under this contract:

252.225-7014 Preference for Domestic Specialty Metals, Alternate I (10 U.S.C. 2241 note).

252.247-7023 Transportation of Supplies by Sea (10 U.S.C. 2631).

252.247-7024 Notification of Transportation of Supplies by Sea (10 U.S.C. 2631).

(End of clause)

252.247-7023 TRANSPORTATION OF SUPPLIES BY SEA (MAY 2002)

(a) Definitions. As used in this clause --

(1) "Components" means articles, materials, and supplies incorporated directly into end products at any level of manufacture, fabrication, or assembly by the Contractor or any subcontractor.

(2) "Department of Defense" (DoD) means the Army, Navy, Air Force, Marine Corps, and defense agencies.

(3) "Foreign flag vessel" means any vessel that is not a U.S.-flag vessel.

(4) "Ocean transportation" means any transportation aboard a ship, vessel, boat, barge, or ferry through international waters.

(5) "Subcontractor" means a supplier, materialman, distributor, or vendor at any level below the prime contractor whose contractual obligation to perform results from, or is conditioned upon, award of the prime contract and who is performing any part of the work or other requirement of the prime contract.

(6) "Supplies" means all property, except land and interests in land, that is clearly identifiable for eventual use by or owned by the DoD at the time of transportation by sea.

(i) An item is clearly identifiable for eventual use by the DoD if, for example, the contract documentation contains a reference to a DoD contract number or a military destination.

(ii) "Supplies" includes (but is not limited to) public works; buildings and facilities; ships; floating equipment and vessels of every character, type, and description, with parts, subassemblies, accessories, and equipment; machine tools; material; equipment; stores of all kinds; end items; construction materials; and components of the foregoing.

(7) "U.S.-flag vessel" means a vessel of the United States or belonging to the United States, including any vessel registered or having national status under the laws of the United States.

(b)(1) The Contractor shall use U.S.-flag vessels when transporting any supplies by sea under this contract.

(2) A subcontractor transporting supplies by sea under this contract shall use U.S.-flag vessels if--

(i) This contract is a construction contract; or

(ii) The supplies being transported are--

(A) Noncommercial items; or

(B) Commercial items that--

(1) The Contractor is reselling or distributing to the Government without adding value (generally, the Contractor does not add value to items that it contracts for f.o.b. destination shipment);

(2) Are shipped in direct support of U.S. military contingency operations, exercises, or forces deployed in humanitarian or peacekeeping operations; or

(3) Are commissary or exchange cargoes transported outside of the Defense Transportation System in accordance with 10 U.S.C. 2643.

(c) The Contractor and its subcontractors may request that the Contracting Officer authorize shipment in foreign-flag vessels, or designate available U.S.-flag vessels, if the Contractor or a subcontractor believes that --

(1) U.S.-flag vessels are not available for timely shipment;

(2) The freight charges are inordinately excessive or unreasonable; or

(3) Freight charges are higher than charges to private persons for transportation of like goods.

(d) The Contractor must submit any request for use of other than U.S.-flag vessels in writing to the Contracting Officer at least 45 days prior to the sailing date necessary to meet its delivery schedules. The Contracting Officer will process requests submitted after such date(s) as expeditiously as possible, but the Contracting Officer's failure to grant approvals to meet the shipper's sailing date will not of itself constitute a compensable delay under this or any other clause of this contract. Requests shall contain at a minimum --

(1) Type, weight, and cube of cargo;

(2) Required shipping date;

(3) Special handling and discharge requirements;

(4) Loading and discharge points;

(5) Name of shipper and consignee;

(6) Prime contract number; and

(7) A documented description of efforts made to secure U.S.-flag vessels, including points of contact (with names and telephone numbers) with at least two U.S.-flag carriers contacted. Copies of telephone notes, telegraphic and facsimile message or letters will be sufficient for this purpose.

(e) The Contractor shall, within 30 days after each shipment covered by this clause, provide the Contracting Officer and the Maritime Administration, Office of Cargo Preference, U.S. Department of Transportation, 400 Seventh Street SW., Washington, DC 20590, one copy of the rated on board vessel operating carrier's ocean bill of lading, which shall contain the following information:

(1) Prime contract number;

(2) Name of vessel;

(3) Vessel flag of registry;

(4) Date of loading;

(5) Port of loading;

(6) Port of final discharge;

(7) Description of commodity;

(8) Gross weight in pounds and cubic feet if available;

(9) Total ocean freight in U.S. dollars; and

(10) Name of the steamship company.

(f) The Contractor shall provide with its final invoice under this contract a representation that to the best of its knowledge and belief--

(1) No ocean transportation was used in the performance of this contract;

(2) Ocean transportation was used and only U.S.-flag vessels were used for all ocean shipments under the contract;

(3) Ocean transportation was used, and the Contractor had the written consent of the Contracting Officer for all non-U.S.-flag ocean transportation; or

(4) Ocean transportation was used and some or all of the shipments were made on non-U.S.-flag vessels without the written consent of the Contracting Officer. The Contractor shall describe these shipments in the following format:

ITEM DESCRIPTION	CONTRACT LINE ITEMS	QUANTITY

TOTAL_____

(g) If the final invoice does not include the required representation, the Government will reject and return it to the Contractor as an improper invoice for the purposes of the Prompt Payment clause of this contract. In the event there has been unauthorized use of non-U.S.-flag vessels in the performance of this contract, the Contracting Officer is entitled to equitably adjust the contract, based on the unauthorized use.

(h) In the award of subcontracts for the types of supplies described in paragraph (b)(2) of this clause, the Contractor shall flow down the requirements of this clause as follows:

(1) The Contractor shall insert the substance of this clause, including this paragraph (h), in subcontracts that exceed the simplified acquisition threshold in part 2 of the Federal Acquisition Regulation.

(2) The Contractor shall insert the substance of paragraphs (a) through (e) of this clause, and this paragraph (h), in subcontracts that are at or below the simplified acquisition threshold in part 2 of the Federal Acquisition Regulation.

(End of clause)

252.247-7024 NOTIFICATION OF TRANSPORTATION OF SUPPLIES BY SEA (MAR 2000)

(a) The Contractor has indicated by the response to the solicitation provision, Representation of Extent of Transportation by Sea, that it did not anticipate transporting by sea any supplies. If, however, after the award of this contract, the Contractor learns that supplies, as defined in the Transportation of Supplies by Sea clause of this contract, will be transported by sea, the Contractor --

(1) Shall notify the Contracting Officer of that fact; and

(2) Hereby agrees to comply with all the terms and conditions of the Transportation of Supplies by Sea clause of this contract.

(b) The Contractor shall include this clause; including this paragraph (b), revised as necessary to reflect the relationship of the contracting parties--

(1) In all subcontracts under this contract, if this contract is a construction contract; or

(2) If this contract is not a construction contract, in all subcontracts under this contract that are for--

(i) Noncommercial items; or

(ii) Commercial items that--

(A) The Contractor is reselling or distributing to the Government without adding value (generally, the Contractor does not add value to items that it subcontracts for f.o.b. destination shipment);

(B) Are shipped in direct support of U.S. military contingency operations, exercises, or forces deployed in humanitarian or peacekeeping operations; or

(C) Are commissary or exchange cargoes transported outside of the Defense Transportation System in accordance with 10 U.S.C. 2643.

(End of clause)

Security Contract Language for all Corps of Engineers' Unclassified Contracts (PIL 2003-06, 19 Feb 03)

All Contractor employees (U.S. citizens and Non-U.S. citizens) working under this contract (*to include grants, cooperative agreements and task orders*) who require access to Automated Information Systems (AIS), (stand alone computers, network computers/systems, e-mail) shall, at a minimum, be designated into an ADP-III position (non-sensitive) in accordance with DoD 5220-22-R, Industrial Security Regulation. The investigative requirements for an ADP-III position are a favorable National Agency Check (NAC), SF-85P, Public Trust Position. The contractor shall have each applicable employee complete a SF-85P and submit to the Seattle District, U.S. Army, Corps of Engineers, PO Box 3755, Seattle, WA 98124-3755, Security Officer within three (3) working days after award of any contract or task order, and shall be submitted prior to the individual being permitted access to an AIS. Contractors that have a commercial or government entity (CAGE) Code and Facility Security Clearance through the Defense Security Service shall process the NACs and forward visit requests/results of NAC to the Seattle District, U.S. Army, Corps of Engineers, PO Box 3755, Seattle, WA 98124-3755, Security Officer. For those contractors that do not have a CAGE Code or Facility Security Clearance, the Seattle District, U.S. Army, Corps of Engineers, PO Box 3755, Seattle, WA 98124-3755, Security Office will process the investigation in coordination with the Contractor and contract employees.

In accordance with Engineering Regulation, ER 380-1-18, Section 4, foreign nationals who work on Corps of Engineers' contracts or task orders shall be approved by the HQUSACE Foreign Disclosure Officer or higher before beginning work on the contract/task order. This regulation includes subcontractor employees. (NOTE: exceptions to the above requirement include foreign nationals who perform janitorial and/or ground maintenance services.) The contractor shall submit to the Division/District Contract Office, the names of all foreign nationals proposed for performance under this contract/task order, along with documentation to verify that he/she was legally admitted into the United States and has authority to work and/or go to school in the US. Such documentation may include a US passport, Certificate of US citizenship (INS Form N-560 or N-561), Certificate of Naturalization (INS Form N-550 or N-570), foreign passport with I-551 stamp or attached INS Form I-94 indicating employment authorization, Alien Registration Receipt Card with photograph (INS Form I-151 or I-551), Temporary Resident Card (INS Form I-688), Employment Authorization Card (INS Form I-688A), Reentry Permit (INS Form I-327), Refugee Travel Document (INS Form I-571), Employment Authorization Document issued by the INS which contains a photograph (INS Form I-688B).

Classified contracts require the issuance of a DD Form 254 (Department of Defense Contract Security Classification Specification).

(End of Clause)

SECTION 01000

SCOPE OF WORK

1. GENERAL

This project is the design and construction of installation boundary fencing on Fort Richardson Army Installation, Alaska. The project consists of fencing foundation design appropriate for arctic conditions to minimize frost jack/heave, installation of fencing and gates, and all other work required to install fence.

1.1 Design and Construction of Installation Boundary Fencing

Contractor shall provide installation of fencing, gates, and bollards in accordance with attached fencing/gate/bollard detail drawings and specifications and provide all foundation design and installation. See attached specifications, site plan drawings, and detail drawings for description and approximate layout of Installation Boundary Fencing.

a. FENCE FOUNDATION DESIGN AND CRITERIA

Fence foundation design and criteria applies to both Base and Optional Work Items. Contractor shall provide 100% engineering and design of fencing foundations by a licensed professional engineer and installation appropriate for arctic conditions, including measures to minimize frost jack/heave of foundations. (See section 02821 FENCING, paragraph POST INSTALLATION). Retrofit elements of existing fencing shall be inspected by the government for unacceptable conditions such as structural deficiencies and excessive vertical lean (greater than approximately 5 degrees from the vertical as measured from the base). Unacceptable elements of existing fencing shall be replaced. The following foundation criteria shall be met by the Contractor's foundation design:

(1) During extreme wind conditions, defined by design wind speed, no more than 3% deflection at the top of the fence post, measured from ground level, shall be allowed. Extreme wind condition design speed for Fort Richardson is 49 meters/second.

(2) Top of Combination Security Fencing (CSF) and FE-6 Chain Link Security Fencing line posts shall be capable of withstanding a 91 Kilogram working point load applied horizontally, perpendicular to the fence line.

(3) Top of Pipe Rail Fence line posts and top of bollards shall be capable of withstanding a 227 Kilogram working point load applied horizontally, perpendicular to the fence line.

(4) Maximum distance between line posts shall be 3 meters.

b. ALIGNMENT DESCRIPTION

The fence alignment is described in terms of both Base and Optional Work Items. Fort Richardson's fence alignment shall consist of installation of Combination Security Fencing (CSF), FE-6 Chain Link Security Fencing (FE-6), Pipe Rail Fencing, gate installation, and fence removal and retrofit at various locations. All existing fencing shall remain in place, except where new Combination Security Fencing (CSF) encounters existing State of

Alaska Department of Transportation (AK DOT) Moose Fence (Netwire) along the West side of Glenn Highway (See Base Work Items 0001-0009 description below).

Where new Pipe Rail fencing encounters existing Pipe Rail fence, new Pipe Rail fence shall tie into the existing Pipe Rail fencing. Where new Pipe Rail fence encounters existing fence other than Pipe Rail, including existing Netwire fencing along the Glenn Highway, the new Pipe Rail fence shall be placed as close as possible, but within 1.5 meters behind the existing fencing on Fort Richardson property. Existing Netwire fence is composed of fence line posts with galvanized wire mesh attached to the line posts. See State of Alaska Department of Transportation as built Moose Fence Details drawing (Moose Fence Detail) in Specification Section 02821. Where any new fencing is placed along side existing fencing, new fencing shall be tied into the existing fencing at both termination/end points of the existing fencing to eliminate the through corridor created between the two fences. See drawing Plate C-21, drawing detail “New Fence Tie-In To Existing Fence”.

Contractor shall coordinate all fence and gate placement during phases of design prior to start of construction. If adjustment greater than 150 mm is necessary during construction, final location shall be coordinated with the Contracting Officer ~~before~~prior to installation of fencing and gates.

Beginning with the Base Work Items, the following describes the approximate fence alignment in terms of Base and Optional Work Items.

Base Work Items 0001-0009

New Combination Security Fencing shall begin approximately at the Northern end of Camp Denali along the West side of Glenn Highway and shall head Southwest along the Glenn Highway ROW on Army property and shall continue Southwest until reaching the point where existing Netwire fencing ends near the installation boundary just Northeast of Anchorage. Contractor shall propose~~coordinate~~ alignment~~placement~~ of the fence along the Glenn Highway corridor for approval by~~with~~ the Contracting Officer.

Where new Combination Security fencing (CSF) encounters existing Alaska Department of Transportation (AK DOT) Moose Fence (Netwire) along the West side of Glenn Highway, the Contractor shall retrofit approximately 4,400 meters of existing Netwire fence to become Combination Security Fence (CSF). The Contractor shall retrofit the existing Netwire fence by removing approximately 4,400 meters of existing galvanized wire fencing from the existing line posts~~ and shall use the existing line posts and foundations to install new CSF fencing~~. Whenever existing line posts have 100 mm (4 inches) outside diameter, the Contractor shall use the existing line posts and foundations to install new CSF fencing. Wherever the existing line posts have less than 100 mm (4 inches) outside diameter, the existing line posts shall be replaced with new 100 mm (4 inches) outside diameter line posts and the foundations shall be replaced. The Contractor shall not be held to the foundation criteria required by this contract for the existing Netwire fence foundations to be used in retrofitting the existing Netwire fence along the West side of the Glenn Highway. All removed galvanized wire fencing shall become the property of the Contractor and shall be removed from Fort Richardson property and disposed of offsite by the Contractor. All existing moose gates shall remain in place and new fencing shall be tied into existing moose gates. New CSF

fencing retrofit shall be built concurrently while removing existing netwire fence, so that there are no openings in the existing netwire fence that will allow moose passage, thus exposing the public to moose entering the Glen Highway.

Before performing the work required on or near the AK DOT Netwire fencing, the Contractor shall obtain a construction permit through the AK DOT Right-of-Way Section and if the Contractor's work will be within 3 meters of the existing pedestrian/bike path running along the Glenn Highway, the Contractor shall obtain another special use permit through the AK DOT Right-of-Way Section.

Two new double moose gates, per Alaska Department of Transportation as built Moose Gate design, shall be installed by the Contractor in the Combination Security Fencing (CSF) running along the West side of Glenn Highway. See attached State of Alaska Department of Transportation Moose Fence Details drawing in Specification Section 02821 showing Moose Gates and Moose Gate details. See attached State of Alaska Department of Transportation Moose Fence Details Upper Moose Gate Hinge drawing in Specification Section 02821 for special grease requirements.

Five CSF Double Swing Gates with an opening of 7.3 meters shall be installed by the Contractor along the West side of Glenn Highway to modify existing and new double moose gates along Glenn Highway. Two CSF Double Swing Gates with an opening of 4.2 meters shall be installed by the Contractor along the West side of the Glenn Highway to modify existing single moose gates. Contractor shall propose~~coordinate~~ ~~exact~~ gate placement for approval by~~with~~ the Contracting Officer. See attached Conceptual Drawing of Gate/Bollards Needed Along Glenn Highway at the end of this section.

Contractor shall install forty-eight Stationary Bollards in this fence alignment. Bollards shall be per design detail in the project drawings. Contractor shall propose~~coordinate~~ exact bollard placement for approval by~~with~~ the Contracting Officer.

Modification of existing and new moose gates consists of the installation of CSF Double Swing Gates and bollards along the opening in the fence alignment required for moose access through the fence once the moose has entered into the moose gate complex. Bollards shall be spaced 760mm (30 inches) apart. See stationary bollard detail on drawing Plate C-19 and CSF Double Swing Gate detail on drawing Plate C-21. See attached Conceptual Drawing of Gates/Bollards Needed Along Glenn Highway at the end of this section.

Optional Work Item 0010

FE-6 Chain Link Security fencing shall be installed along the North side of the Fort Richardson cantonment area. The new FE-6 fence shall start by tying into the existing chain link fencing on the North side of the Ammunition Storage Point (ASP). The new FE-6 fencing shall run East along the North side of the cantonment area along the North side of Camp Carroll until reaching the Glenn Highway and existing AK DOT Netwire fence (See drawing Plate C-1). The FE-6 fencing shall not encroach on the Glenn Highway ROW. The Contractor shall propose~~coordinate~~ the placement of the FE-6 fence alignment along the North side of the cantonment area ~~with~~for approval by the Contracting Officer.

Once reaching the Glenn Highway and existing AK DOT Netwire fence, FE-6 Chain Link Security fencing shall head North until reaching the Northern Terminus of the existing AK DOT Netwire fence and shall head South along the West side of the Glenn Highway until reaching the Northern side of Camp Denali. The existing Netwire fencing encountered by the FE-6 fencing shall remain in place and the new FE-6 fencing shall be installed on Army property West of the existing Netwire fencing as close as possible but within 1.5 meters of the existing fence.

Six~~Eight~~ chain link manual Double Swing Vehicle Gates with an opening of 7.3 meters (max.) shall be installed in the FE-6 Chain Link Security fencing alignment along the North side of the cantonment area (See drawing Plate C-20). The approximate location of the gates are shown on the Contonment Fencing and Combined Security Fence Option 10 map at the end of this section. Contractor shall ~~coordinate~~propose exact gate placement ~~with~~for approval by the Contracting Officer.

Optional Work Item 0011

New Pipe Rail Fencing shall begin by tying into the Southern end of the existing Pipe Rail fencing running North/South along the Installation boundary on the Eastern side of Anchorage. New Pipe Rail fencing shall continue South along the Installation boundary on the Eastern side of Anchorage and Far North Bicentennial Park and will then head East along the boundary on the Northern side of Stuckagain Heights. The new Pipe Rail fence shall continue East along the Installation boundary toward the Chugach Mountains and shall terminate at approximately the West rim of the North Fork Campbell Creek canyon (See drawing Plate C-14 and USGS quardangle map Anchorage (A-8) NE, Alaska 1979 revised 1993). Contractor shall ~~coordinate with the Contracting Officer to determine~~propose the exact location of Pipe Rail fence termination in the Campbell Creek canyon area for approval by the Contracting Officer. See State of Alaska DNR letter dated 13 Sep 2004 at the end of this section for restrictions to the fence across the south fork of Chester Creek.

Contractor shall install seven Steel Pipe Swing Gates with an opening of 7.3 meters (max.) and one Steel Pipe Swing Gate with an opening of 4.6 meters (max) in this Pipe Rail Fence alignment. Contractor shall ~~coordinate~~propose exact gate placement ~~with~~for approval by the Contracting Officer.

Contractor shall install seventeen Stationary Bollards in this Pipe Rail Fence alignment. Bollards shall be per design detail in the project drawings. Contractor shall ~~coordinate~~propose exact bollard placement ~~with~~for approval by the Contracting Officer.

Optional Work Item 0012

Pipe Rail fence shall begin along the Fort Richardson property boundary at the Southern end of Clunie Lake and shall continue South and then East along the installation boundary line, toward the Alaska Railroad tracks. The Alaska Railroad right-of-way (ROW) shall not be encroached upon. See drawing Plate C-2 and Real Estate documents. Contractor shall ~~coordinate~~propose the exact Pipe Rail Fence starting point south of Clunie Lake ~~with~~for approval by the Contracting Officer.

Existing Pipe Rail fence begins on the East side of the Alaska Railroad track ROW (See drawing Plate C-1 and C-2 and Real Estate documents). The existing Pipe Rail fence shall remain in place. New Pipe Rail fence shall begin again by tying into the East end of the existing Pipe Rail fence and shall continue along the Installation boundary East toward the Glenn Highway and then turn South towards the town of Eagle River (See drawing Plate C-2, C-3, and C-4). Existing Netwire fencing runs along the Installation boundary just North of Eagle River and runs South along part of the Western side of Eagle River (See drawing Plate C-1). Where new Pipe Rail fence encounters existing Netwire fencing in this area, the existing Netwire fence shall remain in place and the new Pipe Rail fence shall be installed on the West side (secure side/Army property side) of the existing fence as close as possible, but within 1.5 meters.

Installation of Pipe Rail fence shall continue South past the town of Eagle River along the Installation boundary and South along the Army property side of the Glenn Highway ROW until reaching the Northern side of the Anchorage Regional Landfill. The Pipe Rail fence shall head West along the Northern side of the Anchorage Regional Landfill, then turn Southwest along the Western side of the Anchorage Regional Landfill, and then turn Southeast along the Southwestern side of the Anchorage Regional Landfill (See drawing Plate C-1 and C-4). The Pipe Rail fence shall continue Southeast along the Southwestern side of the Anchorage Regional Landfill until reaching the Glenn Highway ROW. The fence shall not encroach on the Glenn Highway ROW. Existing chain link fencing surrounds the Anchorage Regional Landfill and shall remain in place (See drawing Plate C-1). Where new Pipe Rail fence encounters the existing chain link fence around the Anchorage Regional Landfill, the new Pipe Rail fence shall be installed on the Army property side of the existing fence as close as possible, but within 1.5 meters.

Starting at approximately the Southwestern corner of the Anchorage Regional Landfill, Pipe Rail Fencing shall be installed along the West side of the Glenn Highway and shall head Southwest towards Anchorage along the Glenn Highway until approximately the location that existing AK DOT Netwire fencing begins (See drawing Plate C-1). New fencing shall not encroach on the Glenn Highway ROW and shall be placed on Army property. Contractor shall ~~coordinate~~propose placement of the fence along the Glenn Highway corridor ~~with~~for approval by the Contracting Officer.

Before performing the work required near the Glenn Highway AK DOT ROW, the Contractor shall obtain a construction permit through the AK DOT Right-of-Way Section and if the Contractor's work will be within 3 meters of the existing pedestrian/bike path running along the Glenn Highway, the Contractor shall obtain another special use permit through the AK DOT Right-of-Way Section.

Contractor shall install three Steel Pipe Swing Gates with an opening of 7.3 meters (max.) in this Pipe Rail Fence alignment. Contractor shall ~~coordinate~~propose exact gate placement ~~with~~for approval by the Contracting Officer.

Contractor shall install thirty-four Stationary Bollards in this Pipe Rail Fence alignment. Bollards shall be per design detail in the project drawings. Contractor shall ~~coordinate~~propose exact bollard placement ~~with~~for approval by the Contracting Officer.

Optional Work Item 0013

New Pipe Rail Fence shall begin at the Northeastern corner of the Fort Richardson property boundary near the Knik Arm and follow the property boundary south until reaching Clunie Lake. The fence alignment shall terminate at Clunie Lake and not continue around the edge of Clunie Lake (See drawing Plate C-1, C-2, and C-4).

Contractor shall install one Steel Pipe Swing Gate with an opening of 4.6 meters (max.) and one Steel Pipe Swing Gate with an opening of 3.1 meters (max) in this Pipe Rail Fence alignment. Steel Pipe Swing Gates with 4.6 meter and 3.1 meter openings shall each have a galvanized steel post installed to lock the gates open to when the gate is fully opened. Contractor shall ~~coordinate~~propose exact gate placement ~~with~~for approval by the Contracting Officer.

Contractor shall install seventeen Stationary Bollards in this Pipe Rail Fence alignment. Bollards shall be per design detail in the project drawings. Contractor shall ~~coordinate~~propose exact bollard placement ~~with~~for approval by the Contracting Officer.

Optional Work Item 0014

New Pipe Rail Fencing shall be installed along the Eastern side of the Glenn Highway ROW on Army property, heading Southwest towards Anchorage, until reaching the Installation boundary. When the new Pipe Rail fence reaches the Installation boundary along the East side of Anchorage, the Pipe Rail fence shall turn South, then West, and then South following the Installation boundary until reaching the Northern end of existing Pipe Rail fencing running North/South along the Installation boundary on the Eastern side of Anchorage. The existing Pipe Rail fence is located on the Eastern side of the Muldoon area of Anchorage. The new Pipe Rail fence shall terminate by tying into the Northern end of the existing Pipe Rail Fencing (See drawing Plate C-1).

New fencing shall not encroach on the Glenn Highway ROW and shall be placed on Army property. Contractor shall coordinate placement of the fence along the Glenn Highway corridor with the Contracting Officer. Before performing the work required near the Glenn Highway AK DOT ROW, the Contractor shall obtain a construction permit through the AK DOT Right-of-Way Section and if the Contractor’s work will be within 3 meters of the existing pedestrian/bike path running along the Glenn Highway, the Contractor shall obtain another special use permit through the AK DOT Right-of-Way Section.

Across from the Anchorage Regional Landfill on the Eastern side of Glenn Highway, new Pipe Rail Fence shall be installed along the Installation boundary. The new Pipe Rail fence shall not encroach on the Glenn Highway ROW and shall head East and then South following the Installation boundary and tie into the Chugach Mountain slopes. The Contractor shall ~~coordinate~~propose ~~with the Contracting Officer to determine~~ the exact location of the Pipe Rail fence termination in this area (See drawing Plate C-4) for approval by the Contracting Officer.

Contractor shall install five Steel Pipe Swing Gates with an opening of 7.3 meters (max.) in this Pipe Rail Fence alignment. Contractor shall

~~coordinate~~propose exact gate placement ~~with~~for approval by the Contracting Officer.

Contractor shall install seventy-five Stationary Bollards in this Pipe Rail Fence alignment. Bollards shall be per design detail in the project drawings. Contractor shall ~~coordinate~~propose exact bollard placement ~~with~~for approval by the Contracting Officer. See attached Conceptual Drawing of Gates/Bollards Needed Along Glenn Highway at the end of this section.

c. ALIGNMENT CRITERIA

The alignment criteria stated below apply to both Base and Optional Work Items.

(1) See specifications section 00800, Special Contract Requirements paragraph SCR-10 and Appendix A for real estate information. Compliance with all existing right-of-ways is the responsibility of the Contractor.

(2) Fence alignment depicted in contract drawings is of a general nature and an approximation. The Contractor shall ~~coordinate~~propose the final fence alignment ~~with~~for approval by the Contracting Officer. All fencing shall be installed within 300 mm (12 inches) of the actual Fort Richardson property line on Army property, unless existing real estate (rights-of-way, etc…), terrain considerations, or other alignment criteria dictate otherwise. To avoid encroachment on private property, this measurement shall apply to the distance between the Fort Richardson property line and the barbed wire overhang of the boundary fence, where applicable. Where fence alignment does not follow the installation boundary property line, it shall be located approximately as shown and described in site plan drawings. Final alignments ~~and~~ shall be ~~determined~~proposed by the Contractor ~~in the field~~ for approval by the Contracting Officer.

(3) Where fence alignment runs approximately parallel to rivers, all fencing shall be setback a minimum of 1.5 meters from the high water mark of the river. If vegetation along the river is growing beyond 1.5 meters from the high water mark, fence shall be installed along the vegetation line, unless otherwise directed by the Contracting Officer. If criteria 3 conflicts with criteria 2, criteria 3 shall be followed, except in instances where fence alignment would no longer be located on Government Land. If such case exists, Contractor shall notify Contracting Officer to obtain guidance. A permit from Alaska Department of Natural Resources (DNR) is required if construction activities will occur below the ordinary high water mark. If construction activities require work below the ordinary high water mark, any required permits will be obtained by the Government. The Contractor must have in his possession copies of the required permits prior to commencement of any work below the ordinary high water mark.

(4) The Government will provide delineation of wetland areas on Army property. The Contractor shall closely coordinate the alignment of the fence and construction activities in these wetland areas with the Contracting Officer. All construction activities in wetland areas shall be conducted in the winter when the ground is frozen a minimum depth of 300mm. Mechanical clearing of vegetation in designated wetland areas shall occur during winter months to prevent wetland disturbance. Vegetation shall be cleared when a minimum of 152 mm of snow is on the

ground and the ground is frozen a minimum depth of 300 mm. Contractor shall not perform any grubbing activities in designated wetland areas. If construction activities in wetland areas require permits, any required permits will be obtained by the Government. If permits are required before construction begins in wetland areas, the Contractor must have in his possession copies of the required permits prior to beginning fence construction in wetland areas. Of the total fence alignment length, approximately 4,200 meters of it will occur in wetlands. See attached Approximate Location and Distances for Fence and Wetland Intersection map at the end of this section.

(5) Fence alignment shall not cross any rivers, creeks, or other waterways, including Eagle River, Ship Creek, Chester Creek, and the North Fork of Campbell Creek. All fencing shall terminate 1.5 meters beyond the high water mark of the waterway. Vegetation to be cleared along the secure side of the fence alignment for the 9.1 meter corridor on Amy property, shall not be cleared to the edge of waterways. A strip of natural riparian vegetation will be left intact along the banks of waterways. The Contractor shall ~~coordinate~~propose the clearing termination point near waterways ~~with~~for the approval of the Contracting Officer.

(6) Waterways shall not be crossed by construction equipment unless the waterway is frozen sufficiently enough to support construction equipment. A permit from Alaska Department of Natural Resources (DNR) is required before crossing of any waterways when frozen. If construction activities require crossing of frozen waterways, any required permits will be obtained by the Government. The Contractor must have in his possession copies of the required permits prior to crossing any frozen waterways.

(7) If contaminated soil is discovered while performing construction activities related to fence removal or installation, Contractor shall notify Contracting Officer immediately to receive handling and disposal guidance before performing additional work. Established USAG-AK and Alaska Department of Environmental Conservation procedures shall be followed.

(8) Fence alignment vertical clearance shall comply with the National Electrical Safety Code IEEE C2-2002 Table 234-1.

(9) If during excavation or other construction activities any previously unidentified or unanticipated historical, archaeological, and cultural resources are discovered or found, all activities that may damage or alter such resources shall be temporarily suspended. Resources covered by this paragraph include but are not limited to: any human skeletal remains or burials; artifacts; shell, midden, bone charcoal, or other deposits; rock or coral alignments, pavings, wall, or other constructed features; and any indication of agricultural or other human activities. Upon such discovery or find, the Contractor shall immediately notify the Contracting Officer so that the appropriate authorities may be notified and a determination made as to their significance and what, if any, special disposition of the finds should be made. The Contractor shall cease all activities that may result in impact to or the destruction of these resources. The Contractor shall secure the area and prevent employees or other persons from trespassing on, removing, or otherwise disturbing such resources.

(10) Contractor shall revegetate all disturbed areas with a mix of Alaskan ryegrass and fescue after the fence is installed. Contractor shall coordinate specific mix requirements with the Contracting Officer.

(11) Contractor shall contact homeowners adjacent to the intended construction zone prior to commencement of construction.

(12) Contractor shall protect existing electrical and mechanical services and utilities. Contractor shall request locates and obtain clearances from utilities prior to any fence installation work that may impact existing utilities.

(13) Where new fencing is installed along/near roadways, required clear zones shall be followed per State of Alaska Department of Transportation Alaska Highway Preconstruction Manual (PCM) or Washington State Department of Transportation Design Manual if additional guidance is needed, unless otherwise directed by the Contracting Officer. Where new gates are installed, required decision sight distances shall be followed per State of Alaska Department of Transportation Alaska Highway Preconstruction Manual (PCM) or Washington State Department of Transportation Design Manual if additional guidance is needed, unless otherwise directed by the Contracting Officer.

d. WARNING AND GATE SIGNS

Warning signs apply to fencing in both Base and Optional Work Items. Warning signs shall be placed at 91 meter intervals along the entire length of the fence. Gate signs apply to all Double Swing Vehicle Gates and Steel Pipe Swing Gates in Optional Work Items. Gate signs shall be placed on both sides of all Double Swing Vehicle Gates and Steel Pipe Swing Gates. See detail drawings.

1.2 PERIMETER SURVEY REQUIREMENTS

1.2.1 Scope. Survey requirements apply to Base Work Item 0009 and Optional Work Items 0011AH, 0012AG, 0014AG, 0015, and 0016. Work consists of land surveying services to determine accurate property corners along the boundary of Fort Richardson, Alaska, where security fencing will be installed. Contractor shall locate all property corners and set intervisible points along the boundary line and fence alignment for a total of approximately 18,500 meters. Surveying is necessary to determine the Fort Richardson Installation boundary south of the Eagle River area, areas where new fence will be installed along the Glenn Highway Right-of-Way, along the Southern Fort Richardson Installation boundary, and along Fort Richardson Eastern boundary across from the Anchorage Regional Landfill.

a. Contractor shall recover horizontal control monuments sufficient in density to enable them to search for, and to re-set, if required, monuments required to re-establish any boundary lines. Locate and tie in to existing primary control network and existing established section corners.

b. Monuments shall be placed at all major corners of the exterior boundary of the property unless already marked or referenced by an existing monument. Contractor shall tie monuments previously installed by others.

c. Visually identify and stake proposed boundary monument locations and section corners in project area at Fort Richardson.

d. Coordinate with the Fort Richardson Directorate of Public Works (DPW) to have them verify the staked locations prior to digging for new monumentation installation.

e. Install new monuments at intervisible locations, as necessary along property boundary.

1.2.2 Special Requirements. The following specifications are project specific and intended to supplement technical requirements in the basic contract.

a. Horizontal control surveys shall meet third order standards in accordance with EM 1110-1-1004, Geodetic and Control Surveying, dated 1 June 2002.
(see http://www.usace.army.mil/publications/eng-manuals/em1110-1-1004/toc.htm)

b. An Alaska-registered professional land surveyor must perform or supervise replacement of survey monuments and/or establishment of monuments and all boundary lines.

c. All monument work must comply with AS 34.65.040 and meet standards in the latest version of the Alaska Society of Professional Land Surveyors' Standards of Practice Manual.

d. Contractor shall walk the boundaries with the Fort Richardson Directorate of Public Works, and stake the locations of each proposed boundary corner.

e. Fort Richardson Public Works shall provide permission to dig at each staked location within two (2) working days of Contractor's request. Contractor shall notify the Contracting Officer of any delays to this process.

f. Contractor is responsible for acquiring all additional survey data such as boundaries, topography and profiles, plus establishment of undefined boundaries and/or Right-of-Way beyond what has been provided by Government Furnished Materials to the Contractor.

g. Any existing permanent survey markers disturbed, destroyed or removed by Contractor activities shall be replaced in-kind and referenced at the expense of the Contractor. Note – see Item b. above, in reference to Alaska Registered Land Surveyor.

h. Specifications for boundary monuments are as follows:

(1) Monument type shall be the following or equivalent: Bernsten A1NBF30 Pipe Monument or Sectional Drive Monument HDRR3, minimum depth 2.4 meters or refusal. The selection of the pipe monument vs. sectional drive rod shall be based on soil conditions found at each site. Each survey monument shall have a 1.8 meter Carsonite Post (CBM2072) with witness post decal affixed and driven to a depth of 0.6 meters below the surface of the ground, in accordance with EM 1110-1-1002, Survey Markers and Monumentation, dated 14 Sep 90.
(see http://www.usace.army.mil/inet/usace-docs/eng-manuals/em1110-1-1002/toc.htm)

(2) Each monument cap will be stamped to identify the project and corner number, i.e., “FTR174-[corner number 1, 2, 3, etc.],” clockwise from the point of beginning around entire boundary perimeter. For cadastral corners follow Manual of Survey Instructions 1973, Dept. of Interior, BLM.

(3) All monumentation shall be provided by the Contractor.

i. Field Notebook Standards:

(1) Field books shall be neat, legible and sequential. They will also show names of crew members and date, temperature and weather conditions at the beginning of each day.

(2) Each field book shall have an index. The serial number and type of instruments used will be shown on this page.

(3) There will be no more than one (1) horizontal set-up per page.

(4) Field notebooks shall be Rite-in-the-Rain, Level No. 311, or equivalent.

(5) Field notebooks shall be marked as follows:

FORT RICHARDSON
Perimeter Survey
FTR 174 Boundary Fencing Project
PARCEL NO. xxxx
Contract No. xxxx
FY03 – (Date)
File No. xxxx Bk (xx_of xx)

j. Control will be based on Alaska State Plane Coordinate System, Zone 4, horizontal NAD 83/91 and vertical NAVD 88. All measurement will be in meters.

k. Fort Richardson Public Works POC is George May, telephone no. (907) 384-1853. All on-post activities must be coordinated through this office.

l. Contractor shall show areas of conflict and/or encroachment and prepare a Record of Survey to be filed on the Government’s behalf.

m. Contractor shall label each monument with an Alaska State Plane Coordinate.

1.2.3 Government-furnished Material: The Contractor may request through the Contracting Officer various maps and Fort Richardson boundary legal descriptions of the project area from USACE Alaska District Real Estate Section for incorporation into the final product. All provided maps and documents are to be returned to the Contracting Officer upon completion of work.

1.2.4 Submittals/Acceptance:

a. Initial Submittal: The Contractor shall provide a data file and hard copy of three (3) survey map for review to assure compliance with project specifications.

b. Pre-Final Submittal: The Contractor shall provide survey data files and (3) hard copies of all maps depicting boundary monument and section corner locations.

c. Final Submittal: The Contractor shall provide survey data files and hard copies of all maps depicting boundary monument and section corner locations, containing revisions required as a result of the Pre-Final review conference. This submittal shall consist of:

1) All items in paragraph c. above.

2) Compact Disc containing all survey map files in AutoDesk Land development R.3 or later format and files containing all electronic data collection, computations and closures.

3) Three (3) hard copies of each sheet.

4) Original field notebooks.

Alaska registered professional land surveyor shall file a record of survey with the appropriate agencies.

1.2.5 Submittal Schedule. The Contractor shall furnish sufficient technical and supervision and administration personnel to ensure the execution of the work. Schedule will commence on the date the Contractor receives notice-to-proceed.

1.2.6 Submittals. Government approval is required for submittals with a "G" designation; submittals not having a "G" designation are for information only. When used, a designation following the "G" designation identifies the office that will review the submittal for the Government. The following shall be submitted in accordance with Section 01330 SUBMITTAL PROCEDURES:

Initial Submittal; G
Pre-Final Submittal; G
Final Submittal; G

Contract shall provide weekly status updates on progress of survey monument installation and data collection.

1.2.7 Delays. The Contractor shall keep the Government advised at all times about delays or difficulties that may prohibit the completion of any part or the whole of their project on schedule.

1.3 GEOTECHNICAL ASSESSMENT

This paragraph applies to both Base and Optional Work Items. The Contractor shall provide all necessary geotechnical exploration and analysis, including sampling, testing, and classifying, to install fence foundations throughout alignment appropriately for arctic conditions including, but not limited to minimizing frost jack/heave of foundations.

1.4 SITE DEVELOPMENT

This paragraph applies to both Base and Optional Work Items. Site work shall include all required clearing and grubbing 9.1 meters wide along secure side of the fence on Army property and removal of indicated existing fencing segments. See Specification sections 02220 and 02231 for additional requirements.

Attachments

- Conceptional Drawing of Gates/Bollards Needed Along Glenn Highway
- Approximate Location and Distances for Fence and Wetland Intersection map
- Contonment Fencing and Combined Security Fence Option 10 map
- State of Alaska DNR letter dated 13 September 2004

Conceptual Drawing of Gates/Bollards needed along Glenn Highway (Shown in Red) – (Dimensions and Locations not to Scale)

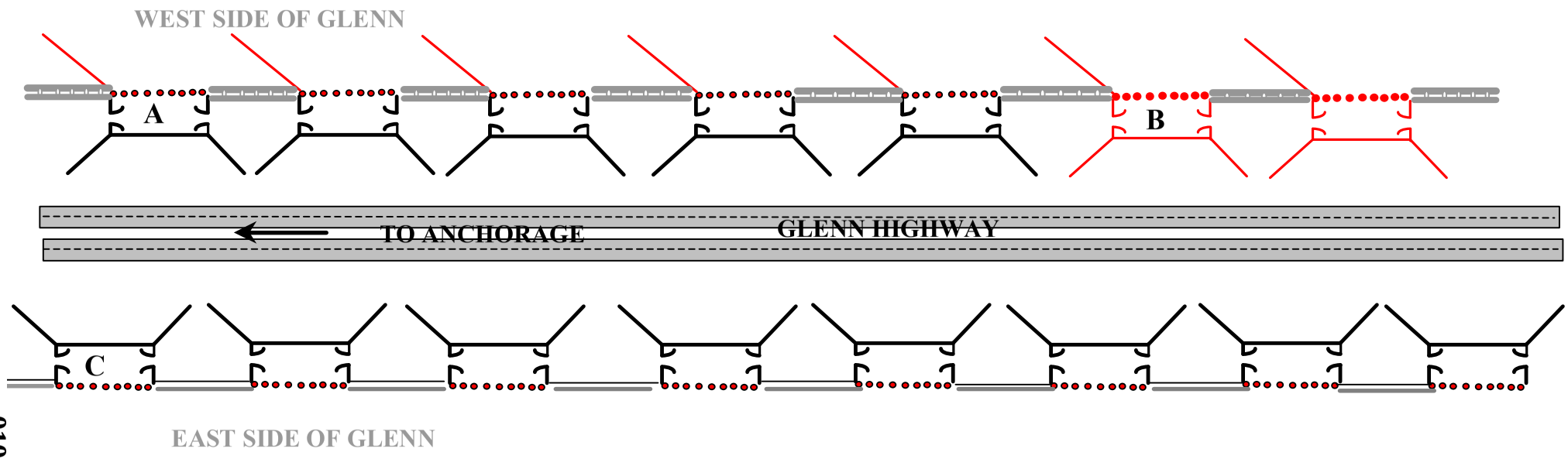

KEY

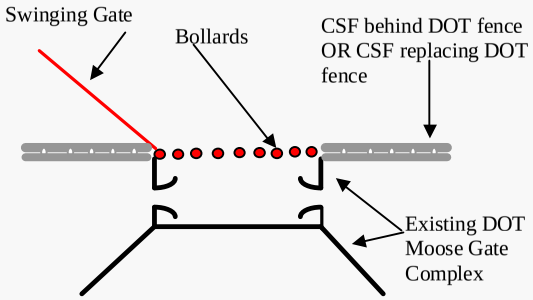

A — **Modifications to Existing Moose Gate Complex on West Side of Glenn**

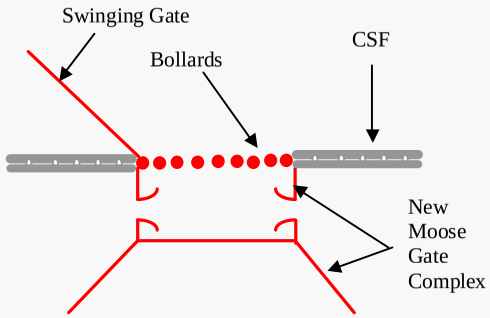

B — **Installation of New Moose Gate Complexes (DOT design) on West Side of Glenn (Including Modifications)**

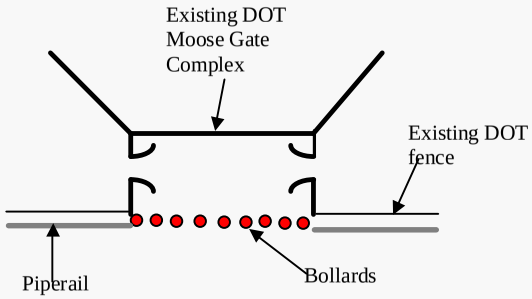

C — **Modifications to Existing Moose Gate Complex on East Side of Glenn**

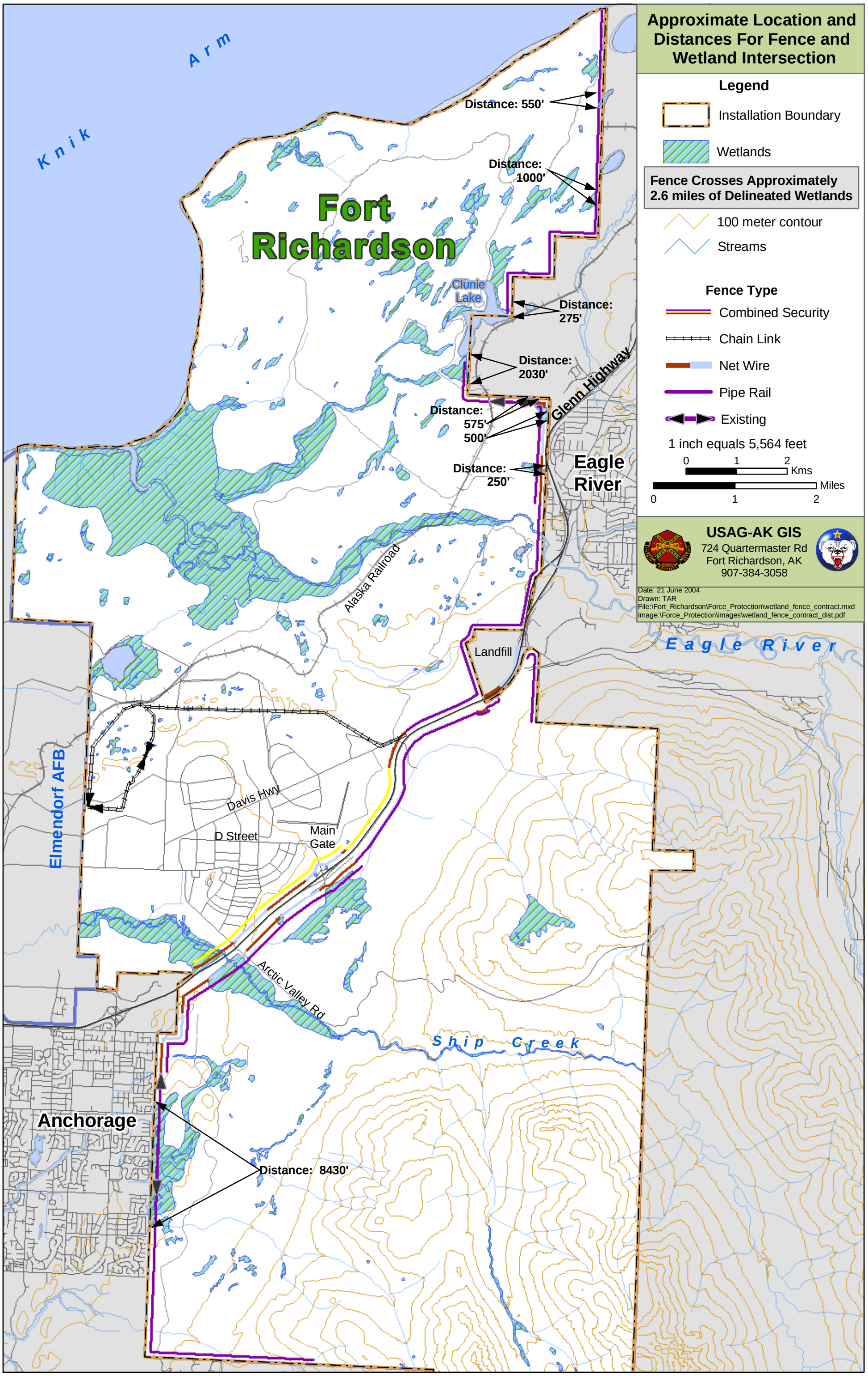
Approximate Location and Distances For Fence and Wetland Intersection
Legend
Installation Boundary
Wetlands
Fence Crosses Approximately 2.6 miles of Delineated Wetlands
100 meter contour
Streams
Fence Type
Combined Security
Chain Link
Net Wire
Pipe Rail
Existing
1 inch equals 5,564 feet
0 1 2 Kms
0 1 2 Miles
USAG-AK GIS
724 Quartermaster Rd
Fort Richardson, AK
907-384-3058
Date: 21 June 2004
Drawn: TAR
File:\Fort_Richardson\Force_Protection\wetland_fence_contract.mxd
Image:\Force_Protection\images\wetland_fence_contract_dist.pdf
Knik Arm
Fort Richardson
Distance: 550'
Distance: 1000'
Clunie Lake
Distance: 275'
Distance: 2030'
Glenn Highway
Distance: 575'
500'
Distance: 250'
Eagle River
Alaska Railroad
Landfill
Eagle River
Elmendorf AFB
Davis Hwy
D Street
Main Gate
Arctic Valley Rd
Ship Creek
Anchorage
Distance: 8430'

Cantonment Fencing And Combined Security Fence Option 10

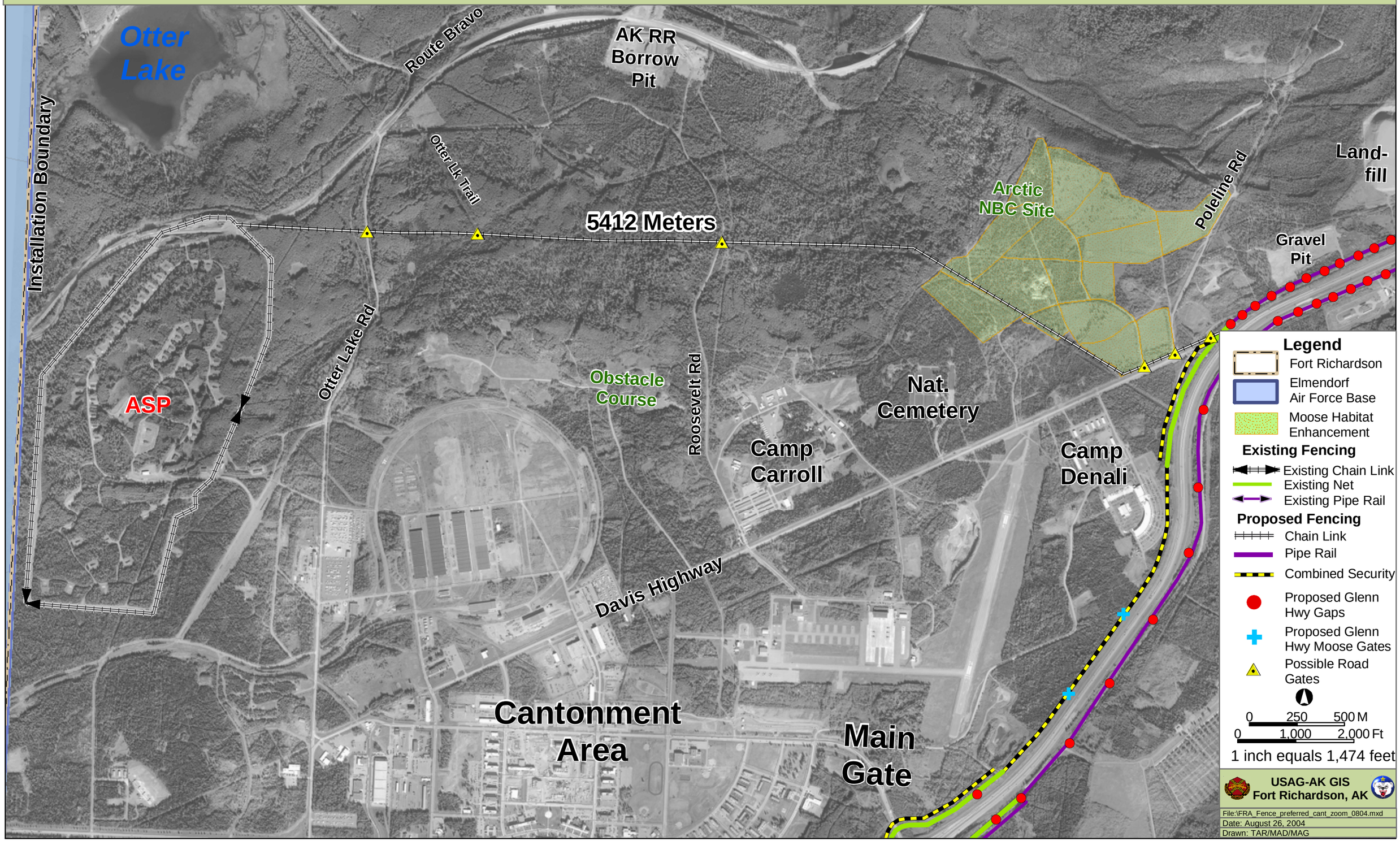

STATE OF ALASKA

DEPARTMENT OF NATURAL RESOURCES
Office of Habitat Management and Permitting

FRANK H. MURKOWSKI, GOVERNOR

550 West 7th Ave., Suite 1420
Anchorage, AK 99501-3566
PHONE: (907) 269-8690
FAX: (907) 269-5673

September 13, 2004

Environmental Planning
Directorate of Public Works
Attn: Mr. Christopher Garner
730 Quartermaster Road
Fort Richardson, AK 99505-6505

Dear Mr. Garner:

RE: Ft. Richardson Fence Project - South Fork of Chester Creek

This letter is a follow up to the field visit to the South Fork of Chester Creek. On September 8, 2004, Ms. Jesse Coltrane from the Department of Fish and Game and I met with you and Mr. Bill Quirk to discuss the Department of the Army fencing project in the vicinity of Chester Creek near Muldoon Road. The Alaska Department of Natural Resources Office of Habitat Management and Permitting (OHMP) has concerns about the impacts to area streams during construction of the fence for Fort Richardson. During the field visit, you explained the purpose and need to place the fence across the South Fork of Chester Creek, in order to maintain the integrity of the fencing project along this corridor.

The OHMP does not have any objection to the placing of the fence across this creek as long as the fence supports are not placed in the bed of the stream and as far away from the streambank as possible. The placement of the fence would not require a fish habitat permit provided that the pile supports are located above the ordinary high water (OHW) level of the stream. A Fish Habitat Permit from OHMP is required for the operation of equipment on the frozen surface of all anadromous fish streams and any work below the OHW of these streams.

We appreciate the opportunity to comment on this project. Please call me if you have any questions at 269-6995.

Sincerely,

Cindy J. Anderson
Habitat Biologist

cc: J. Coltrane, ADF&G
A. Rappoport, USFWS
B. Lance, NMFS
W. Dolezal, ADF&G/SF

End of Section
01000-16

This page intentionally blank

SECTION 01012

DESIGN AFTER AWARD

PART 1 GENERAL

This section lists items that must be submitted for review at various times during the preparation of the construction plans and specifications. At a minimum, design submittals are required at the 65% design stage, the 95% design stage and the 100% design stage. The requirements of each design stage are listed in Part 2 of this section.

All design submittals shall comply with the requirements specified in Section 01000 SCOPE OF WORK and elsewhere in the RFP, and the provisions of the Contractor's accepted proposal. In the event of any conflict between the specified requirements and the accepted proposal, the specified requirements will govern unless there is a written and signed agreement between the Contractor and the Contracting Officer waiving a specific requirement.

1.2 GOVERNMENT REVIEW COMMENTS

Design submittals and review conferences shall follow the schedule of the Contractor's accepted proposal and shall incorporate a period for Government review. Changes to that schedule must be requested in writing and approved by the Government.

After receipt of the 65% and 95% submittal packages as described in Part 2, the Government shall have twenty-one (21) days for review and comment. If the submittal package does include the minimum requirements as described in Part 2, the Government has the right to request a resubmittal of the package. A review conference shall be scheduled at each submittal (65% and 95%) at or near Ft. Richardson, Alaska during the first week after that period. The review will be for conformance with requirements. The Contractor shall bring the designers of record for each discipline to the review.

At the conference, or just prior to the conference, the Government will furnish the Contractor comments from the various design sections and from other concerned agencies involved in the review process. During the conference, the Contractor will have the opportunity to either accept the comment, with or without provisions, or have the comment withdrawn if generally agreed upon.

1.3 DESIGNER OF RECORD

The Contractor shall identify, for approval, the Designer of Record for each area of work. One Designer of Record may be responsible for more than one area provided he or she is a listed, registered professional in that area. The Designer(s) of Record shall stamp, sign, and date all design drawings under their responsible discipline at each design submittal stage. (See CONTRACT CLAUSE - REQUIREMENTS FOR REGISTRATION OF DESIGNERS).

1.4 CONTRACTOR DESIGN DOCUMENT REVIEW

The Contractor shall ensure that all design documents submitted after award, including all drawings and calculations, are reviewed by a registered senior engineer/architect in the required discipline who is independent from and not

associated with the design. The independent reviewer may or may not be associated with the organization having done the original design.

The independent reviewer must submit a signed letter of certification with each design submittal stating that he or she has reviewed the design documents for that discipline and that he or she agrees that the design is complete, correct, and in conformance with the contract requirements.

PART 2 PRODUCTS

2.1 PRE-DESIGN CONFERENCE/DESIGN CHARETTE

Following contract award the Contractor ~~and leaders from each design discipline~~ shall meet with project stakeholders from the Government at Ft. Richardson, Alaska. The conference shall include the Project Engineer, Administrative Contracting Officer, Federal, State and local regulatory representatives. Key Government and Contractor personnel shall coordinate requirements for design submittals, schedule, and regulatory actions. This meeting shall establish communication and coordination procedures for execution of the project, to include wetlands and other permits required for construction, and will~~to~~ establish detailed expectations for ~~final placement of~~ the ~~fence~~execution of the project. Discussions shall include the ~~and gather~~ identification of necessary information and appropriate Government POC's for Contractor to establish (1) a site pla~~t~~n, (2) final alignment of the fence and (3) location and design criteria for all other project components including gates, bollards and warning signs. Based on information developed in the meeting the Contractor shall perform a topographic survey and geotechnical survey along the alignment, for design of the fence substructure. The objective is for the Contractor to complete final design and construction of the fence. Fast tracking and other scheduling concerns will be identified and discussed.

2.1.2 Meeting Follow Up. Following the meeting the Contractor will prepare written documents, sketches, etc. that address and confirm agreements made in the meeting and forward them to the Government.

2.2 REQUIRED FORMAT FOR DRAWINGS

Contractor shall use drawing size A1 (841 mm by 594 mm) and shall do drawings in metric. Contractor shall use Alaska District, Corps of Engineers standard title block for Army construction. Standard title block is available at the following site: ftp://ftp.poa.usace.army.mil under folder "COE STD Dwgs".

2.2.1 GEOTECHNICAL DATA

a. The Design-Build Contractor's Geotechnical Engineer of Record shall be responsible for preparing design recommendations. The foundation recommendation report shall be sealed by the engineer in responsible charge who shall be licensed in civil engineering in the State of Alaska.

b. Geotechnical Report: It shall be the Contractor's responsibility to provide any field work deemed necessary. It is the Contractor's responsibility to investigate the subsurface soil conditions, groundwater table and soil resistivity, etc., and obtain adequate geotechnical data to determine utility installation, trench sections and transition requirements, soil bearing capacity, foundation design, consolidation/settlement criteria, roadway or parking structural sections, trench dewatering, waterproofing

design, footing design, caisson design, and all other necessary site work Geotechnical criteria to provide project requirements.

c. Design and Analysis: The Contractor shall prepare a geotechnical design analysis for all work performed for this project. The analysis shall include evaluation of soils, bearing capacity, settlement, lateral earth pressures, temporary and permanent dewatering designs, foundation design, compaction requirements, analysis of the effects of arctic climate including frost transition recommendations. Design shall be in accordance with AFM 88-3, Chap. 7 and AFM 88-7, Chap. 1, followed by other references of choice.

d. Final Geotechnical Report: The Contractor shall submit one copy of the final report, in booklet form, to the Contracting Officer. The final report shall be stamped and sealed by the Contractors Geotechnical Engineer. As a minimum, the report shall include:

(1) The Contractors Geotechnical Design Analysis.

(2) An explanatory narrative of all work performed, observations, relevant discussions and recommendations, typical photos, project and test boring location maps (if additional test borings were drilled), foundation drawings showing foundation type and excavation limits, and exploration logs (if additional test borings were drilled).

2.3 FENCE ALIGNMENT AND SUBMITTAL REQUIREMENTS

2.3.1 Drawings

Drawings for the 65% submittal shall follow the format presented in Appendix C of ER 1110-345-700 for standard and definitive design drawings. Drawings shall be complete and organized as outlined therein. In addition, drawings shall follow the graphic standards such as pen assignments and border selections set forth in Paragraph REQUIRED FORMAT FOR DRAWINGS. The file name of the drawing should include the UPC number, a six-digit number used by the Corps of Engineers for tracking a project from start to finish.

Provide 12 sets of one half size drawings for review. The drawing set shall include the following as a minimum:

Civil

a) Location and Vicinity Map
b) Site Plan(s) showing fence alignment and gate locations
c) Subsurface features and topography

2.4 95% DESIGN SUBMITTAL REQUIREMENTS

2.4.1 Design Analysis (DA)

The Design Analysis shall follow the format presented in appendix B of ER 1110-345-700 available on the Corps of Engineers "Techinfo" web site (http://www.hnd.usace.army.mil/techinfo/) excluding part 6 "Exceptions to Appendix B Requirements". The contents shall reflect the minimum requirements listed in this RFP and the Contractor's proposal along with any subsequent items negotiated since the 65% review conference. Provide 12 copies of the design analysis for review.

2.4.2 Design Drawings

Drawings for the 95% submittal shall follow the format presented in Appendix C of ER 1110-345-700 for standard and definitive design drawings. In addition, drawings shall follow the graphic standards such as pen assignments and border selections set forth in Paragraph REQUIRED FORMAT FOR DRAWINGS. Drawings shall be complete and organized as outlined therein and in such a manner that any qualified contractor would be able to construct the facility without additional assistance except for shop drawings or as may be required to deal with unforeseen conditions encountered during construction. Provide 12 sets of one half size drawings for review. Drawing set shall include the following as a minimum:

Civil

a) Location and Vicinity Map
b) Site Plan(s) showing fence alignment, types of fencing, gate locations, surface features, topography and boring logs as applicable
c) Drawings showing fencing details

2.5 100% DESIGN SUBMITTAL REQUIREMENTS

The 100% Design Submittal shall be similar in content and format to the 95% design submittal with the exception that all review comments accepted at the 95% design review conference shall be incorporated into the design documents. Provide 12 sets of one half size design drawings and specifications for review. The Government shall have twenty-one (21) days to review. When all comments have been incorporated and the drawings are approved for construction, provide 3 sets of full size design drawings, 12 sets of one half size drawings, 12 sets of the design analysis and specifications, and a disk with the design drawings in AutoCAD version 14 or later.

PART 3 EXECUTION - Not Applicable

END OF SECTION

SECTION 01015

SPECIAL ITEMS

PART 1 GENERAL

1.1 SCOPE

Items included in this section cover special features and/or requirements which are not otherwise specified or indicated.

1.2 REFERENCES

The publications listed below form a part of this specification to the extent referenced. The publications are referred to in the text by basic designation only.

AMERICAN SOCIETY FOR TESTING AND MATERIALS (ASTM)

ASTM E 1527	(1993) Practice for Environmental Site Assessments: Phase I Environmental Site Assessment Process

U.S. NATIONAL ARCHIVES AND RECORDS ADMINISTRATION (NARA)

29 CFR 1910	Occupational Safety and Health Standards
29 CFR 1926	Safety and Health Regulations for Construction
40 CFR 61	National Emission Standards for Hazardous Air Pollutants

NATIONAL FIRE PROTECTION ASSOCIATION (NFPA)

NFPA 51B	(1999) Standard for Fire Prevention During Welding, Cutting, and Other Hot Work
NFPA 241	(1996) Safeguarding Construction, alteration, and Demolition Operations

STATE OF ALASKA ADMINISTRATIVE CODE (AAC)

18 AAC 72	Wastewater Treatment and Disposal

1.3 ACCIDENT PREVENTION PLAN

The Contractor shall obtain the Contracting Officer's approval of the Accident Prevention Plan required by the Safety and Health Requirements Manual EM 385-1-1, dated 3 September 1996 prior to start of any work at the project site.

1.4 FIRE SAFETY

The Contractor shall obtain a permit from the organization having jurisdiction over the job site for any welding or open flame work.

1.5 RANGE SAFETY CLASSES

Arrangements will be made for contractor personnel to attend range safety class(es) at no charge. Class(es) will include proper identification and reporting procedures for unexploded ordinance (UXO) that may possibly be encountered during construction. The Government will then remove the UXO at no cost to the contractor.

1.~~5~~6 WORK CLEARANCE AND UTILITY OUTAGES

The Contractor shall limit the number of power outages to the minimum necessary to complete the work. Each outage shall be limited to 4 hours in duration. Work shall be continuous until completed during each outage. Any power switching required will be done by facility personnel. The Contractor shall submit a written request through the Contracting Officer at least 10 days in advance of each requested outage. Contractor shall give 24 hour advance notice prior to outage work. The request shall include the following:

a. The date and time of day the outage will start and length of time it will be in effect.

b. A signed statement, in triplicate, outlining each operation and identifying the equipment on which the work is to be performed.

No outage shall be affected until the Contractor has received approval from the Contracting Officer.

1.~~6~~7 DISPOSITION OF MATERIALS

Combustible and noncombustible waste material shall be disposed of offsite. No burning of materials will be permitted.

1.~~6~~7.1 Salvageable Material

Salvageable material, if not otherwise indicated, shall become the property of the Contractor. The value of such salvage shall be reflected in the contract price.

1.~~7~~8 TESTS

The Contractor shall provide testing, except where specifically noted to be performed by the Government, in accordance with SECTION 01451 CONTRACTOR QUALITY CONTROL.

~~1.8 NOT USED~~

1.9 CAMP FACILITIES

There are no Government owned camp facilities at the jobsite for the Contractor's use.

1.10 FURNISHINGS FOR GOVERNMENT FIELD OFFICE (NOT USED)

~~The Government field office specified in SECTION 01500 TEMPORARY CONSTRUCTION FACILITIES shall be furnished with one desk, one drawing layout table, three chairs, a four-drawer vertical or two-drawer lateral file cabinet, a plain~~

~~paper FAX machine, a business telephone with answering machine, a portable copier with automatic document feed, and an IBM compatible personal computer with SVGA monitor, 400 Mhz, 256 MB RAM, 20 GB hard drive, network card, sound card and speakers, MS Windows, Microsoft Office Professional latest version, Microsoft Exchange Client latest version, 56K Fax/Modem, and HP Deskjet 340 printer. All physical hard drives shall be surrendered at the conclusion of the project and shall become the property of the Corps of Engineers. The telephone and FAX machine shall have single party lines, different from each other, and separate from the Contractor's phone line(s). All costs shall be borne by the Contractor and included in the contract price, except that long distance charges incurred by the Government representative will be paid for by the Government upon arrangement with the Contracting Officer.~~

1.11 PARTNERING

a. The Government intends to encourage the foundation of a cohesive partnership with the Contractor and its subcontractors. This partnership will be structured to draw on the strengths of each organization to identify and achieve reciprocal goals. The objectives are effective and efficient contract performance, intended to achieve completion within budget, on schedule, and in accordance with plans and specifications.

b. This partnership will be bilateral in makeup, and participation will be totally voluntary. Implementation of this initiative will be a topic of discussion at the Preconstruction Conference. Other recurring or special purpose meetings, as agreed between the Government and the Contractor, will be held as necessary to resolve contentious issues and maintain the partnering spirit.

c. Project Status Meeting shall be held once a week with the CQC System Manager hosting the meeting with COE and Users' representatives in attendance. The CQC representative shall generate the agenda and provide the hand-out during the meeting. Items to be discussed include the project three-week job schedule, Case Status, Submittals Status, and Comments/Concerns. Minutes of the meeting shall be prepared by CQC and shall be attached to the Daily CQC report.

1.12 SCHEDULING OF WORK

Delivery hours for materials through the main gate are 1000-1600. For deliveries that can not come between those hours, contact CPT Stephen Newman at Provost Marshal so he can make arrangements for vehicle inspections and traffic control between 0700-1000 hrs.

Construction noise shall be kept to a minimum and shall not create a nuisance to nearby residents after 8:00 pm and before 7:00 am Monday thru Friday or before 9:00 am Saturday and Sunday.

1.13 BASE SPECIFIC REQUIREMENTS (Attached)

- U.S, Army Alaska Institutional Controls – Standard Operation Procedure
- Installation Pass/Access Roster for Ft. Richardson (6 Nov. 2002)

PART 2 PRODUCTS - NOT USED

PART 3 EXECUTION - NOT USED

S A M P L E L E T T E R

Contracting Officer
Date_____
Address (as stated in Notice of Award)

SUBJECT: Warranty Provisions, Contract

GENTLEMEN:

This is to acknowledge our responsibility in connection with the warranty provisions of this contract as set forth in the contract specifications.

The following items, equipment or systems furnished or installed under this contract are hereby warranted against defective design, material and workmanship for a period as indicated:

Warranted Item, Equipment or System	Identification Serial Number, Etc.	Warranty Expires at 11:59 PM Std. Time
_____	_____	_____
_____	_____	_____
_____	_____	_____

Upon receipt of notice from the Government of failure of any part or parts of the warranted item, equipment, or system during the warranty period, the affected part or parts will be replaced promptly with new parts. Such replacement will include furnishing and installing the new part or parts, making all necessary repairs, restoring the item, equipment, or system to the operating condition specified in this contract and making all such tests as are necessary to ensure that there are no remaining defects. Such tests will be performed in the presence of the Representative of the Using Agency indicated below.

We are responsible to _____ for the warranty provisions of this contract. Correspondence regarding the failure of any of the preceding items, equipment or systems covered by the warranty provisions of this contract should be addressed to:

	Telephone Number:
_____	
_____	_____
_____	_____

Very truly yours,

Signed: _____
Title: _____
Organization: _____

APVR-RPW (200-1)

U.S. Army Alaska Institutional Controls
Standard Operating Procedures

1. References:

a. AR 200-1, Environmental Protection and Enhancement
b. AR 200-2, Army Institutional Control Program Enforcement
c. Interim Army Management Plan for Land Use Controls Associated with Environmental Restoration Activities; Memorandum, Dept. of the Army, USAEC, 17 Aug 01
d. USARAK 200-4, Environmental Quality; Hazardous Waste, Used Oil and Hazardous Materials Management
e. AR 210-20, Army Installation Master Planning
f. 40 CFR 300, National Oil and Hazardous Substances Pollution Contingency Plan.
g. 42 USC 1901 et seq. Comprehensive Environmental Response, Compensation, and Liability Act of 1980, as Amended by the Superfund Amendment and Reauthorization Act of 1986.
h. Federal Facility Agreements for Forts Richardson and Wainwright
i. Defense-State Memorandum of Agreement
j. Operable Unit Records of Decision and/or other decision documents as appropriate.

2. Purpose. These Standard Operating Procedures establish the responsibilities, policies and procedures for complying with Department of Defense (DOD), Department of the Army (DA), and US Army, Alaska (USARAK) regulations as well as Federal and State Laws for instituting, maintaining, and enforcing Institutional Controls (IC) on Federal Facilities.

These controls have been established to implement the selected remedial actions agreed upon by the U.S. Army (Army), the U.S. Environmental Protection Agency (EPA), and the Alaska Department of Environmental Conservation (ADEC) in accordance with the Comprehensive Environmental Response, Compensation, and Liability Act as amended by the Superfund Amendment Reauthorization Act. The details of these agreements may be found in the Decision Documents (DD) and Records of Decision (RODs) which are maintained in the Public Works, Environmental Offices. These agreements have been executed in accordance with the authority cited in Section 1.

These controls also apply to remedial actions agreed upon under Two-Party Compliance Agreements. These agreements are concluded between USARAK and ADEC and apply to petroleum/oil/lubricants- (POL) contaminated sites. Institutional Controls are legal or administrative actions designed to minimize the risk of human exposure to a hazardous substance. The establishment of IC's substantially reduces the costs of cleanup while maintaining essential health and safety requirements. Violation of IC's may significantly increase the costs of site maintenance and cleanup. Institutional Controls, including limitations and restrictions to human access, water use, and property transfer restrictions will supplement engineering controls as appropriate for short- and long-term management to prevent or limit exposure to hazardous substances. Typical controls are:

- Installation and maintenance of signs or fences to restrict access to an area;

- Patrols and enforcement of access restrictions by Military Police;

• Widespread availability of and easy access to an intranet mapping interface application which is capable of accessing Geographic Information System (GIS) data layers which contain information pertaining to contaminated sites. Such information must include the location of contaminated areas, location of water wells, water chemistry, depth to groundwater, etc.;

• Identification of contaminated areas and associated levels of contamination on real property records and land planning maps for notification of future users;

• Provide all contract agencies with construction, excavation and well installation restrictions.

These controls have been established to prohibit or limit access to, or use of, the land, surface water, and ground water and are applicable to all known or suspected contaminated sites. The following are examples of the restrictions agreed upon in the RODs:

• Prohibitions or limitations on the construction or renovation of new or existing facilities to include residential area new construction, road repair and realignment, utility work, digging, trenching, excavation, paving, or drilling of soil borings and wells.

• Recreational use of natural resources i.e., camping, fishing, hunting etc., and training activities i.e., bivouac, combat maneuvers, land navigation, construction of fighting positions, etc., can be prohibited or limited depending on the type of contaminant present.

• Groundwater restrictions prohibit the drilling of water wells for potable water, fire suppression, irrigation or other purposes.

These restrictions remain in place until EPA, ADEC. and the Army mutually decide the contamination has been reduced, through cleanup activities or natural attenuation, to levels protective of human health and the environment. In making their decision, EPA, ADEC, and the Army will consider levels specified in the ROD or other decision document. If no decision document exists, EPA, ADEC, and the Army will consider the application of maximum contaminant levels (MCLs) for potable groundwater or risk-based concentrations for soil, sediment, surface water and other uses of groundwater.

3. Scope: These Standard Operating Procedures apply to all USARAK units and activities. Military and Civilian Support Activities, Tenant Organizations and agencies, and Government and Civilian Contractors that occupy, use, build, repair or maintain facilities on USARAK controlled lands.

4. Responsibilities:

a. The **Installation Commander** or his designee shall approve all Decision Documents and Records of Decision regarding remedial actions and Institutional Controls on USARAK controlled lands in accordance with DA guidance. Installation Commander shall also require compliance with these Decision Documents and Records of Decision.

b. **Directorate of Public Works** shall execute all aspects of the Comprehensive Environmental Response, Compensation, and Liability Act (CERCLA) in accordance with the Defense Environmental Restoration Program and as agreed upon in the Federal Facility Agreements and the Defense-State Memorandum of Agreement. Public Works shall also:

(1) Establish, maintain, and routinely update complete records of all known or suspected sites, restoration actions and Institutional Controls;

(2) Document all actions and Institutional Controls in the Installation Action Plan, environmental GIS data base (REMOTE), and Master Plan. Distribute to affected units, organizations, and tenants, at the point they are affected on annual basis.

(3) Ensure that all affected tenants and contractor organizations are informed of:

(a) Known soil and ground water contamination in their areas of operation;

(b) Institutional Controls associated with remedial activities;

(c) Potential human health risks and environmental impacts associated with violating the controls;

(d) Potential fines, penalties, and criminal implications resulting from violations of the Institutional Controls.

(4) Provide oversight and review of all Excavation Clearance Requests (ECR's) to ensure that all activities that involve disturbance of soil or use of groundwater comply with current environmental laws.

(5) Conduct on-site inspections of all projects for which Institutional Controls are indicated or specified on an approved ECR. The inspections will determine compliance with Institutional Controls and with monitoring, reporting, notification, and stop work requirements specified in the ECR or its attachments.

(6) Ensure all affected, contracting mechanisms (i.e., job order contract, military construction, in-house projects, etc.) are modified to include the appropriate environmental information to prevent violation of Institutional Controls policies and prevent potential fines, penalties, and criminal implications resulting from violations of the Institutional Controls.

USARAK Form 81-E (Excavation Clearance Request) must be appropriately annotated by DPW-Environment Resources to prevent the undertaking of work inconsistent with established Institutional Controls at a particular site. If a dispute with a subordinate activity or tenant arises due to DPW-Environment Resources' non-concurrence on Form 81-E with proposed site work because of the potential for an Institutional Controls violation, the Commander's Policy Memorandum on Institutional Controls shall provide the basis for final resolution.

On-site inspections conducted by DPW Environment Resources during the course of work will confirm whether the work is conducted in compliance with the conditions specified in the ECR and its supporting documentation. If the work is inconsistent with requirements, DPW has the authority to issue a stop-work order. USARAK will not be responsible for costs incurred as a result of a stop-work order issued as a result of a violation of an Institution Control policy.

c. **Directorate of Contracting** shall determine the necessary protocols and language to be incorporated into applicable contract mechanisms to inform potential contractors of the environmental status of USARAK Installations regarding contamination. Such language or protocols will emphasize;

(1) The need for contractors to obtain an ECR prior to conducting any soil disturbing activities anywhere on USARAK controlled lands;

(2) Required attendance at an Explosive Ordnance Disposal (EOD) briefing on unexploded ordnance (UXO);

(3) Potential fines, penalties, and criminal implications resulting from violations of the Institutional Controls;

(4) Contractor familiarity with and adherence to the requirements of USARAK 200-1 Pamphlet, Hazardous Materials and Regulated Waste Management;

(5) The need for contractors to coordinate with DPW Environmental personnel prior to conducting any soil disturbing activities or gaining access to fenced or restricted areas associated with Institutional Controls anywhere on USARAK controlled lands;

d. **Directorate of Plans, Training, Security, and Mobilization** (DPTSM) shall:

(1) Provide all troop units utilizing the training areas information regarding known and potential sources of contamination in the training areas;

(2) Provide information regarding Institutional Controls and the potential fines, penalties, and Criminal implications resulting from violations of the Institutional Controls;

(3) Provide (through the Integrated Training Area Management (ITAM) program) maps and related information regarding USARAK sites with Institutional Controls;

(4) Attend Institutional Controls status update meetings as required by the Installation Commander.

e. **U.S. Army Corps of Engineers, Alaska District** shall ensure that all contract mechanisms incorporate a complete section that provides a detailed explanation of the following information:

(1) The environmental status of the installation in question and the existence of Institutional Controls and the potential fines, penalties, and criminal implications resulting from violations of the Institutional Controls;

(2) The requirements for obtaining an ECR prior to performing any type of excavation, trenching, or disturbance of soil;

(3) The notification requirements for reporting spills, previously unknown soil or ground water contamination, and;

(4) How to dispose of hazardous and non-hazardous wastes, contaminated soil and ground water etc. from USARAK controlled lands in compliance with the requirements of USARAK 200-1 Pamphlet, Hazardous Materials and Regulated Waste Management.

f. **All DOD Personnel** responsible for initiating DA Form 4283, Work Request, are required to become familiar with the Institutional Controls within the immediate work area.

g. **Civilian Tenant Organizations** shall coordinate all work involving the disturbance of soil or installation of a well anywhere on USARAK-controlled lands with the Directorate of Public Works and obtain proper authorization prior to the commencement of work.

h. **Defense Reutilization Management Office** shall dispose of all investigation-derived waste in accordance with the appropriate laws and regulations.

5. Specific procedures and instructions will be provided by DPW Environment Resources to personnel working in areas where Institutional Controls are in place. An after-action report is required as specified in the ECR within 30 days.

6. Work in areas where Institutional Controls are not specified
If Institutional Controls are not specified on the ECR and contamination is found, the following apply:

a. If contaminated soils, drums, unexploded ordnance, or unusual debris are found on or around any work site, the organization conducting the work shall stop work immediately and notify the Fire Department or " 911 "in accordance with USARAK Pamphlet 200-1, Hazardous Materials and Regulated Waste Management. Work at the site will be suspended until the area is cleared by DPW Environment Resources. Site clearance by Range Control is required if unexploded ordnance is involved.

b. Contaminated soil or groundwater removed from the work site must meet container type, sampling and analysis for potential contamination, marking and labeling, and moving and storage requirements specified in Pamphlet 200-1 (above) or as otherwise specified by DPW Environment Resources prior to removal. Soil and groundwater shall not be removed from any part of the installation without written authorization from an authorized USARAK representative. All operations involving hazardous waste will be accomplished in accordance with USARAK Regulation 200-4, Environmental Quality: Hazardous Waste, Used Oil and Hazardous Materials Management and USARAK Pamphlet 200-1, Hazardous Materials and Regulated Waste Management.

DEPARTMENT OF THE ARMY
HEADQUARTERS, U.S. ARMY ALASKA
600 RICHARDSON DRIVE #5000
FORT RICHARDSON, ALASKA 99505-5000

REPLY TO
ATTENTION OF:

APVR-RPW-EV (200-1c)

12 FEB 2002

MEMORANDUM FOR SEE DISTRIBUTION

SUBJECT: Institutional Controls

1. All organizations conducting activities on United States Army Alaska (USARAK) controlled land are responsible for complying with established Institutional Controls. Institutional controls are administrative, procedural, and regulatory measures to control human access to and usage of property. They are applicable to all known or suspected contaminated sites where contamination has been left in place.

2. These controls have been established to implement the selected remedial actions agreed upon by the U.S. Army (Army), the U.S. Environmental Protection Agency (USEPA), and the Alaska Department of Environmental Conservation (ADEC) in accordance with the Comprehensive Environmental Response, Compensation, and Liability Act (CERCLA) as amended by the Superfund Amendment Reauthorization Act (SARA). These controls also apply to remedial actions agreed upon under Two-Party Compliance Agreements. These agreements are concluded between USARAK and ADEC and apply to petroleum/oil/lubricants- (POL) contaminated sites.

3. Institutional controls such as limitations on access, water use, excavations, and property transfers will supplement engineering controls as appropriate for short-term and long-term management to prevent or limit human and environmental exposure to hazardous substances, pollutants, or contaminants. Specific institutional controls include, among other things: limitations on the depth and location of excavations, prohibition of or restrictions on well drilling and use of ground water, requirements for worker use of personal protective equipment, site monitoring, and prohibition of certain land uses, types of vehicles, etc.

4. Organizational units, tenants, and support/contractor organizations must obtain an Excavation Clearance Request (ECR) (see enclosure) for all soil disturbing activities impacting soils six inches or more below the ground surface. The review process for approval of an ECR begins with the identification of the current status (known or suspected hazardous waste site or "clean" site) of a work location. ECR's for work in known or suspected hazardous waste sites:

a. will include specific limitations and controls on such work;

b. will include specific institutional control procedures, and notification, monitoring, reporting, and stop work requirements;

c. may include procedures for management, characterization, and disposal of any soil or groundwater encountered or removed;

d. will identify "project managers" for both the unit/contractor requesting the work and DPW Environment Resources.

5. The DPW project manager will conduct on-site inspections of each work site (at which institutional controls apply) to determine continued compliance with the terms and conditions of the approved ECR. DPW has the authority to revoke ECR approval if the specified terms and conditions are not being met. ECR forms are available at the Customer Service Desks at:

a. Building 730 at Fort Richardson;

b. Building 3015 at Fort Wainwright;

c. Building 605 at Fort Greely.

6. USARAK has negotiated (with USEPA and/or ADEC) decision documents and/or Records of Decision (RODs) that mandate the implementation of institutional controls. USARAK Directorate of Public Works, Environmental Resources Department (PWE), maintains copies of all decision documents and RODs requiring institutional controls in its real property files. PWE provides regularly updated post maps showing all areas affected by institutional controls. These maps can easily be accessed by using an approved intranet mapping interface application. Copies of these maps will be available to each directorate, activity, and tenant organization. To ensure the effectiveness of institutional controls, all organizational units and tenant activities will be informed on an annual basis of institutional controls on contaminated soils and groundwater in effect near their facilities.

7. Institutional controls are enforceable by the U.S. Environmental Protection Agency (USEPA) and the Alaska Department of Environmental Conservation (ADEC). Failure to comply with an institutional control mandated in a decision document or ROD will violate the USARAK Federal Facility Agreement and may result in stipulated fines and penalties. This does not include the costs of corrective actions required due to violation of an established institutional control.

APVR-RPW-EV (200-1c)
SUBJECT: Institutional Controls

8. Where institutional controls are applicable to any organization, tenant, or activity, land use restrictions shall be incorporated into either a lease or memorandum of agreement, as appropriate. Costs for any and all remedial actions and fines and/or stipulated penalties levied as a result of a violation of an established institutional control shall be funded by the violating activity or organization.

Encl
Excavation Clearance Request

JAMES J. LOVELACE
Major General, USA
Commanding

DISTRIBUTION:
A

APVR-RPC 06 November 2002

MEMORANDUM FOR SEE DISTRIBUTION

SUBJECT: Installation Pass for Fort Richardson (Post Commander Policy #24-15)

1. Contractors and all other eligible non-DoD civilians requiring regular access for 12 months or more to Fort Richardson for official business must apply for an Installation Pass through their sponsoring activity or company. i.e. DOL, DPW, DOC, DCA, AAFES, JOC, etc. The request should be submitted on the Fort Richardson Installation Pass/Access Roster Request Form (enclosed) and will include the following information:

a. Sponsoring Agency

b. Contract number and contract expiration date, if applicable

c. Company/agency name (of person requesting Installation Pass), address, and phone number

d. Reason for requesting access to Fort Richardson

e. Each individual's full name, social security number, driver's license number and state, and the individual's signature authorizing release of Privacy Act Information, are required on the request form. The list must include the required Privacy Act Statement (see enclosed Fort Richardson Installation Pass/Access Roster Request Form for the Privacy Act Statement). Requests not containing the Privacy Act Statement and each individual's signature acknowledging they have read and understand the Privacy Act Statement and consent to release of the requested information will be returned to the sponsoring activity without action.

2. Sponsoring units must designate an individual or individuals to authenticate their activity's lists of personnel requesting an Installation Pass. This designation must be on a DD Form 577, Signature Card, signed by the unit/directorate/activity chief and filed with the Post Operations and Provost Marshal's offices. Authentication consists of verification of the employment of the individuals on the roster. Once authenticated, the sponsoring unit's designee(s) will sign a cover memorandum verifying authentication of the list(s). Only sponsors on signature cards will be authorized to authenticate rosters and forward to the Provost Marshal.

3. After authentication the sponsor will fax the application to the Provost Marshal at 384-0807/0832 for a series of checks including, but not limited to, Wants and Warrants, Bars, and FBI screening. This process takes approximately 14 working days.

4. Once the screening process is complete the Provost Marshal will forward the application to Post Operations where the information will be logged and distributed to the Installation Pass section, and Provost Marshal. BARRACKS COMPLEX D STREET PHASE IV FTR163 MATOC Task Order Schedule - 63 APVR-RPC SUBJECT: Installation Pass for Fort Richardson (Post Commander Policy 24-15)

5. After receiving an Installation I.D. the applicant should then proceed to the Provost Marshal's Office to obtain a vehicle pass. Applicants must provide a valid installation pass, driver's license, proof of insurance, vehicle registration and current IM inspection results, if applicable.

6. This authorization for access is subject to change based upon current Force Protection Condition (FPCON) levels. Access can be denied to installation pass holders at Force Protection Delta or anytime the Post Commander determines an increased level of threat.

7. Point of contact for this memorandum is SFC Steger, Fort Richardson FPNCO at 384-2199.

//signed//
DAVID L. SHUTT
LTC, AR
Post Commander

ENCL:
as

DISTRIBUTION:
A (FRA)

APVR-RPC 06 November 2002

MEMORANDUM FOR SEE DISTRIBUTION

SUBJECT: Access Roster for Fort Richardson (Post Commander Policy #24-16)

1. Contractors and all other eligible non-DoD civilians requiring regular access for 12 months or less to Fort Richardson for official business must apply to be added to the Post Access Roster through their sponsoring activity or company. i.e. DOL, DPW, DOC, DCA, AAFES, JOC, etc. The request should be submitted on the Fort Richardson Installation Pass/Access Roster Request Form (enclosed) and will include the following information:

a. Sponsoring Agency

b. Contract number and contract expiration date, if applicable

c. Company/agency name (of person requesting Installation Pass), address, and phone number

d. Reason for requesting access to Fort Richardson

e. Each individual's full name, social security number, driver's license number and state, and the individual's signature authorizing release of Privacy Act Information, are required on the request form. The list must include the required Privacy Act Statement (see enclosed Fort Richardson Installation Pass/Access Roster Request Form for the Privacy Act Statement). Requests not containing the Privacy Act Statement and each individual's signature acknowledging they have read and understand the Privacy Act Statement and consent to release of the requested information will be returned to the sponsoring activity without action.

2. Sponsoring units must designate an individual or individuals to authenticate their activity's lists of personnel requesting an Installation Pass. This designation must be on a DD Form 577, Signature Card, signed by the unit/directorate/activity chief and filed with the Post Operations and Provost Marshal's offices. Authentication consists of verification of the employment of the individuals on the roster. Once authenticated, the sponsoring unit's designee(s) will sign a cover memorandum verifying authentication of the list(s). Only sponsors on signature cards will be authorized to authenticate rosters and forward to the Provost Marshal.

3. After authentication the sponsor will fax the application to the Provost Marshal at 384-0807/0832 for a series of checks including, but not limited to, Wants and Warrants, Ba rs, and FBI screening. This process takes approximately 14 working days.

APVR-RPC
SUBJECT: Access Roster for Fort Richardson (Post Commander Policy 24-16)

4. Once the screening process is complete the Provost Marshal will forward the application to Post Operations where the information will be logged and distributed back to the Provost Marshal were it will be added to the Post access roster.

5. Once added to the Access Roster the applicant upon entering Ft. Richardson will proceed to the Visitors Center located at the main entrance building 47305 to obtain a temporary vehicle pass (USARAK Form 93). Applicants must provide a valid driver's license, proof of insurance, vehicle registration, current IM inspection results, if applicable, and be on the access roster.

6. This authorization for access is subject to change based upon current Force Protection Condition (FPCON) levels. Access can be denied to installation pass holders at Force Protection Delta or anytime the Post Commander determines an increased level of threat.

7. Point of contact for this memorandum is SFC Steger, Fort Richardson FPNCO at 384-2199.

//signed//
DAVID L. SHUTT
LTC, AR
Post Commander

ENCL:
as

DISTRIBUTION:
A (FRA)

Fort Richardson Installation Pass/Access Roster Request Form

(For Processing Requests from Contractors and Other Agencies with Large Numbers of Employees)

PRIVACY ACT STATEMENT

The Privacy Act requires that whenever personal information is requested from an individual which will be filed in such a manner that it will be retrievable by reference to the person's name, Social Security Number, or other personal identifier, the individual must be furnished a Privacy Act Statement that explains why the information is being collected so that the individual can make an informed decision whether to provide the requested information or not. The individuals' signatures below, signify they have read and understand this Privacy Act Statement and consent to the release of the requested information on this form.

Authority: 5 U.S.C. 301 Department Regulations; 10 U.S.C. 3013, Secretary of the Army; Army Regulation 190-13, The Army Physical Security Program and Executive Order 9397 (SSN)

Principle Purposes: To ensure positive identification of non-DoD individuals seeking access to U. S. Army Alaska Installations.

Routine Uses: None. The "Blanket Routine Uses" set forth at the beginning of the Army's Compilation of System Records Notices apply to this system.

Disclosure: Voluntary. However, failure to provide the requested information may result in denial of access to U. S. Army Alaska installations.

Company/Agency Name:			
Company/Agency Address:			
Company/Agency Phone Number:			
Contract Number (If Applicable):			
Contract Expiration Date (If Applicable):			
Sponsoring US Army Alaska Agency:		Sponsoring Agency Authorized Signature:	

Reason for requesting access to Fort Richardson:

Access to Fort Richardson is requested for the following personnel of this Company/Agency (Use additional sheets if necessary)

Last Name	First	MI	SSN	Driver License Number & State	Individual's Signature	PM Office Only

Provost Marshal's Office: Approved Except as Noted Above:	Signature:	Date:
Post Commander's Office: Approved Except as Noted Above:	Signature:	Date:

END OF SECTION

SECTION 01500

TEMPORARY CONSTRUCTION FACILITIES

PART 1 GENERAL

1.1 GENERAL REQUIREMENTS

1.1.1 Site Plan

The Contractor shall prepare a site plan indicating the proposed location and dimensions of any area to be fenced and used by the Contractor, the number of trailers to be used, avenues of ingress/egress to the fenced area and details of the fence installation. Any areas which may have to be graveled to prevent the tracking of mud shall also be identified. The Contractor shall also indicate if the use of a supplemental or other staging area is desired.

1.1.2 Identification of Employees

The Contractor shall be responsible for furnishing to each employee, and for requiring each employee engaged on the work to display, identification as approved and directed by the Contracting Officer. Prescribed identification shall immediately be delivered to the Contracting Officer for cancellation upon release of any employee. When required, the Contractor shall obtain and provide fingerprints of persons employed on the project. Contractor and subcontractor personnel shall wear identifying markings on hard hats clearly identifying the company for whom the employee works.

1.1.3 Employee Parking

Contractor employees shall park privately owned vehicles in an area designated by the Contracting Officer. This area will be within reasonable walking distance of the construction site. Contractor employee parking shall not interfere with existing and established parking requirements of the military installation.

1.2 AVAILABILITY AND USE OF UTILITY SERVICES

The Contractor shall be responsible for providing its own utilities for temporary facilities and construction, approved by the Contracting Officer, and shall comply with the requirements and regulations of local, State or other authorities having jurisdiction. The Contractor shall make arrangements and pay all costs for telephone facilities desired.

1.3 BULLETIN BOARD

Immediately upon beginning of work, the Contractor shall provide a weatherproof glass-covered bulletin board not less than 914 by 1219 mm 36 by 48 inches in size for displaying the Equal Employment Opportunity poster, a copy of the wage decision contained in the contract, Wage Rate Information poster, and other information approved by the Contracting Officer. The bulletin board shall be located at the project site in a conspicuous place easily accessible to all employees, as approved by the Contracting Officer. Legible copies of the aforementioned data shall be displayed until work is completed. Upon completion of work the bulletin board shall be removed by and remain the property of the Contractor.

1.4 PROTECTION AND MAINTENANCE OF TRAFFIC

During construction the Contractor shall provide access and temporary relocated roads as necessary to maintain traffic. The Contractor shall maintain and protect traffic on all affected roads during the construction period except as otherwise specifically directed by the Contracting Officer. Measures for the protection and diversion of traffic, including the provision of watchmen and flagmen, erection of barricades, placing of lights around and in front of equipment and the work, and the erection and maintenance of adequate warning, danger, and direction signs, shall be as required by the State and local authorities having jurisdiction. The traveling public shall be protected from damage to person and property. The Contractor's traffic on roads selected for hauling material to and from the site shall interfere as little as possible with public traffic. The Contractor shall investigate the adequacy of existing roads and the allowable load limit on these roads. The Contractor shall be responsible for the repair of any damage to roads caused by construction operations.

1.4.1 Haul Roads

The Contractor shall, at its own expense, construct access and haul roads necessary for proper prosecution of the work under this contract. Haul roads shall be constructed with suitable grades and widths; sharp curves, blind corners, and dangerous cross traffic shall be avoided. The Contractor shall provide necessary lighting, signs, barricades, and distinctive markings for the safe movement of traffic. The method of dust control, although optional, shall be adequate to ensure safe operation at all times. Location, grade, width, and alignment of construction and hauling roads shall be subject to approval by the Contracting Officer. Lighting shall be adequate to assure full and clear visibility for full width of haul road and work areas during any night work operations. Upon completion of the work, haul roads designated by the Contracting Officer shall be removed.

1.4.2 Barricades

The Contractor shall erect and maintain temporary barricades to limit public access to hazardous areas. Such barricades shall be required whenever safe public access to paved areas such as roads, parking areas or sidewalks is prevented by construction activities or as otherwise necessary to ensure the safety of both pedestrian and vehicular traffic. Barricades shall be securely placed, & clearly visible with adequate illumination to provide sufficient visual warning of the hazard during both day and night.

1.5 CONTRACTOR'S TEMPORARY FACILITIES

1.5.1 Administrative Field Offices

The Contractor shall provide and maintain administrative field office facilities within the construction area at the designated site. Government office and warehouse facilities will not be available to the Contractor's personnel.

1.5.2 Storage Area

The Contractor shall construct a temporary 1.8 m (6 foot) high chain link fence around trailers and materials. The fence shall include plastic strip

inserts, colored green, so that visibility through the fence is obstructed. Fence posts may be driven, in lieu of concrete bases, where soil conditions permit. Trailers, materials, or equipment shall not be placed or stored outside the fenced area unless such trailers, materials, or equipment are assigned a separate and distinct storage area by the Contracting Officer away from the vicinity of the construction site but within the military boundaries. Trailers, equipment, or materials shall not be open to public view with the exception of those items which are in support of ongoing work on any given day. Materials shall not be stockpiled outside the fence in preparation for the next day's work. Mobile equipment, such as tractors, wheeled lifting equipment, cranes, trucks, and like equipment, shall be parked within the fenced area at the end of each work day.

1.5.3 Supplemental Storage Area

Upon Contractor's request, the Contracting Officer will designate another or supplemental area for the Contractor's use and storage of trailers, equipment, and materials. This area may not be in close proximity of the construction site but shall be within the military boundaries. Fencing of materials or equipment will not be required at this site; however, the Contractor shall be responsible for cleanliness and orderliness of the area used and for the security of any material or equipment stored in this area. Utilities will not be provided to this area by the Government.

1.5.4 Appearance of Trailers

Trailers utilized by the Contractor for administrative or material storage purposes shall present a clean and neat exterior appearance and shall be in a state of good repair. Trailers which, in the opinion of the Contracting Officer, require exterior painting or maintenance will not be allowed on the military property.

1.5.5 Maintenance of Storage Area

Fencing shall be kept in a state of good repair and proper alignment. Should the Contractor elect to traverse, with construction equipment or other vehicles, grassed or unpaved areas which are not established roadways, such areas shall be covered with a layer of gravel as necessary to prevent rutting and the tracking of mud onto paved or established roadways; gravel gradation shall be at the Contractor's discretion. Grass located within the boundaries of the construction site shall be mowed for the duration of the project. Grass and vegetation along fences, buildings, under trailers, and in areas not accessible to mowers shall be edged or trimmed neatly.

1.5.6 New Building

In the event a new building is constructed for the temporary project field office, it shall be a minimum 3.6 m (12 feet) in width, 5 m (16 feet) in length and have a minimum of 2.1 m (7 feet) headroom. It shall be equipped with approved electrical wiring, at least one double convenience outlet and the required switches and fuses to provide 110-120 volt power. It shall be provided with a work table with stool, desk with chair, two additional chairs, and one legal size file cabinet that can be locked. The building shall be waterproof, shall be supplied with heater, shall have a minimum of two doors, electric lights, a telephone, a battery operated smoke detector alarm, a sufficient number of adjustable windows for adequate light and ventilation, and a supply of approved drinking water. Approved sanitary

facilities shall be furnished. The windows and doors shall be screened and the doors provided with dead bolt type locking devices or a padlock and heavy duty hasp bolted to the door. Door hinge pins shall be non-removable. The windows shall be arranged to open and to be securely fastened from the inside. Glass panels in windows shall be protected by bars or heavy mesh screens to prevent easy access to the building through these panels. Any new building erected for a temporary field office shall be maintained by the Contractor during the life of the contract and upon completion and acceptance of the work shall become the property of the Contractor and shall be removed from the site. All charges for telephone service for the temporary field office shall be borne by the Contractor, including long distance charges.

1.5.7 Security Provisions

Adequate outside security lighting shall be provided at the Contractor's temporary facilities. The Contractor shall be responsible for the security of its own equipment; in addition, the Contractor shall notify the appropriate law enforcement agency requesting periodic security checks of the temporary project field office.

1.6 GOVERNMENT FIELD OFFICE (NOT USED)

~~Resident Engineer's Office: The Contractor shall provide the Government Resident Engineer with an office, approximately 19 square meters (200 square feet) in floor area, located where directed. Contractor shall provide space heat, electric light and power, water and sanitary facilities consisting of one lavatory and one water closet, and shall maintain the accommodations approved by the Contracting Officer. A mail slot in the door or a lockable mailbox mounted on the surface of the door shall be provided. At completion of the project, the office shall remain the property of the Contractor and shall be removed from the site. Electricity and power shall be connected and disconnected in accordance with local codes and to the satisfaction of the Contracting Officer. Electric utilities, power, water and sanitary facilities shall comply with local requirements and regulations. See Section 01015 for furnishings.~~

1.7 PLANT COMMUNICATION

Whenever the Contractor has the individual elements of its plant so located that operation by normal voice between these elements is not satisfactory, the Contractor shall install a satisfactory means of communication, such as telephone or other suitable devices. The devices shall be made available for use by Government personnel.

1.8 DUST CONTROL/AIR POLLUTION

The Contractor shall maintain excavations, embankments, stockpiles, haul roads, permanent and temporary access roads, and all other work areas within or outside the project boundaries free from dust, which would cause a hazard or nuisance. Sprinkling or similar methods shall be employed to control dust. If sprinkling is used, the Contractor shall retain sufficient, suitable equipment at the site and repeat applications at such intervals as to keep all parts of the disturbed area damp at all times 24-hours/day, 7-days/week. As a minimum, one water truck and one street sweeper shall be on-site at all times except when freezing weather precludes sprinkling. Dust control shall be performed as the work proceeds. There shall be no visible dust coming off any portion of the work site at any time, or off any vehicle

hauling material for the Contractor. In addition, the Contractor shall ensure that no material of any type will fall off any vehicle while in transit. Any dirt or mud which is tracked onto paved or surfaced roadways shall be cleaned away. No separate or direct payment will be made for dust control and the cost thereof shall be considered incidental to and included in the contract price.

1.9 CLEANUP

Construction debris, waste materials, packaging material and the like shall be removed from the work site daily. Any dirt or mud which is tracked onto paved or surfaced roadways shall be cleaned away. Materials resulting from demolition activities which are salvageable shall be stored within the fenced area described above or at the supplemental storage area. Stored material not in trailers, whether new or salvaged, shall be neatly stacked when stored.

1.10 RESTORATION OF STORAGE AREA

Upon completion of the project and after removal of trailers, materials, and equipment from within the fenced area, the fence shall be removed and will become the property of the Contractor. Areas used by the Contractor for the storage of equipment or material, or other use, shall be restored to the original or better condition. Gravel used to traverse grassed areas shall be removed and the area restored to its original condition, including top soil and seeding as necessary.

PART 2 PRODUCTS - Not Used

PART 3 EXECUTION - Not Used

END OF SECTION

This page intentionally blank

SECTION 02821

FENCING

PART 1 GENERAL

1.1 REFERENCES

The publications listed below form a part of this specification to the extent referenced. The publications are referred to in the text by basic designation only.

AMERICAN SOCIETY FOR TESTING AND MATERIALS (ASTM)

ASTM A 121; Rev 2004	(1999) Standard Specification for Zinc-Coated (Galvanized) Steel Barbed Wire
ASTM A 153/A 153M	(2003) Zinc Coating (Hot-Dip) on Iron and Steel Hardware
ASTM A 176	(1999) Stainless and Heat-Resisting Chromium Steel Plate, Sheet, and Strip
ASTM A 392	(2003) Zinc-Coated Steel Chain-Link Fence Fabric
ASTM A 478	(1997; R 2002) Chromium-Nickel Stainless Steel Weaving and Knitting Wire
ASTM A 491	(2003) Aluminum-Coated Steel Chain-Link Fence Fabric
ASTM A 666	(2000) Annealed or Cold-Worked Austenitic Stainless Steel Sheet, Strip, Plate, and Flat Bar
ASTM A 780	(2001) Repair of Damaged and Uncoated Areas of Hot-Dipped Galvanized Coatings
ASTM A 824	(2001) Metallic-Coated Steel Marcelled Tension Wire for Use With Chain Link Fence
ASTM C 94/C 94M	(2003a) Ready-Mixed Concrete
ASTM D 4541	(2002) Pull-Off Strength of Coatings Using Portable Adhesion Testers
ASTM F 1043	(2000) Strength and Protective Coatings on Metal Industrial Chain-Link Fence Framework
ASTM F 1083	(1997; R 2003) Specification for Pipe, Steel, Hot-Dipped Zinc-Coated (Galvanized) Welded, for Fence Structures
ASTM F 567	(2003) Standard Practice for Installation of Chain-Link Fence

ASTM F 626	(1996a; R 2003) Fence Fittings
ASTM F 883	(1997) Padlocks
ASTM F 900	(2003) Industrial and Commercial Swing Gates

1.2 SUBMITTALS

Government approval is required for submittals with a "G" designation; submittals not having a "G" designation are for information only. When used, a designation following the "G" designation identifies the office that will review the submittal for the Government. The following shall be submitted in accordance with Section 01330 SUBMITTAL PROCEDURES:

SD-07 Certificates

Fencing; G

Statement, signed by an official authorized to certify on behalf of the manufacturer, attesting that the fencing and component materials meet the specified requirements.

PART 2 PRODUCTS

2.1 FENCE FABRIC

Fence fabric shall conform to the following:

2.1.1 Chain Link Fence Fabric

ASTM A 392, Class 1, zinc-coated steel wire with minimum coating weight of 34 grams of zinc per foot of coated surface, or ASTM A 491, Type I, aluminum-coated steel wire. Fabric shall be fabricated of 9 gauge wire woven in 50 mm mesh. Fabric height shall be 2.44 M. Fabric shall be twisted and barbed on the top selvage and knuckled on the bottom selvage.

2.2 GATES

ASTM F 900. Gate shall be the type shown and swing indicated by the Contracting Officer. Gate frames shall conform to strength and coating requirements of ASTM F 1083 for Group IA, steel pipe, with external coating Type A, nominal pipe size (NPS) 1-1/2. Gate frames shall conform to strength and coating requirements of ASTM F 1043, for Group IC, steel pipe with external coating Type A or Type B, nominal pipe size (NPS) 1-1/2. Gate fabric shall be as specified for chain link fabric. Gate leaves more than 2.44 m wide shall have either intermediate members and diagonal truss rods or shall have tubular members as necessary to provide rigid construction, free from sag or twist. Gate leaves less than 2.44 m wide shall have truss rods or intermediate braces. Gate fabric shall be attached to the gate frame as specified by ASTM F 567. Latches, hinges, stops, keepers, rollers, and other hardware items shall be furnished as required for the operation of the gate. Latches shall be arranged for padlocking so that the padlock will be accessible from both sides of the gate. Keepers shall be provided for holding the gates in the open position.

Moose gates shall be of the type shown in the State of Alaska Department of Transportation as built MOOSE FENCE DETAILS drawing attached at the end of this section.

2.3 POSTS

2.3.1 Metal Posts

Fence posts shall be either Group IA Schedule 40 steel pipe with external zinc coating Type A or Group IC steel pipe, zinc-coated with external coating Type A or Type B. The inside diameter of Group IA steel pipe for metal fence posts shall be 90 mm (3.548 in). The inside diameter of Group IC steel pipe for metal fence posts shall be 93 mm (3.680 in). Strength and coating requirements for Group IA posts shall conform to ASTM F 1083. Strength and coating requirements for Group IC posts shall conform to ASTM F 1043. Outside diameter of fence posts shall be as shown on the drawings. Line posts and terminal (corner, gate, and pull) posts selected shall be of the same designation throughout the fence. Gate post shall be for the gate type specified subject to the limitation specified in ASTM F 900.

2.4 BRACES AND RAILS

ASTM F 1083, zinc-coated, Group IA, steel pipe, size NPS 1-1/4. Group IC steel pipe, zinc-coated, shall meet the strength requirements of ASTM F 1043. Braces and rails shall be Group IA or Group IC, steel pipe, size NPS 1-1/4, size 42 mm and shall be zinc coated (Type A) conforming to the requirements of ASTM F 1043.

Pipe Rails shall be Group IA or Group IC, steel pipe, size NPS 1-1/4, outside diameters indicated on drawings and shall be zinc coated (Type A) conforming to the requirements of ASTM F 1043. The inside diameter of Group IA steel pipe rails 75 mm O.D. shall be 63 mm (2.469 in) and the inside diameter of Group IA steel pipe rails 65 mm O.D. shall be 53 mm (2.067 in). The inside diameter of Group IC steel pipe rails 75 mm O.D. shall be 65 mm (2.555 in) and the inside diameter of Group IC steel pipe rails 65 mm O.D. shall be 54 mm (2.115 in).

2.5 WIRE

2.5.1 Tension Wire

Tension wire shall be Type I or Type II, Class 2 coating, in accordance with ASTM A 824.

2.6 ACCESSORIES

ASTM F 626. Ferrous accessories shall be zinc or aluminum coated. Truss rods shall be furnished for each terminal post. Truss rods shall be provided with turnbuckles or other equivalent provisions for adjustment. Tie wire for attaching fabric to rails, braces, and posts shall be 9 gauge steel wire and match the coating of the fence fabric. Miscellaneous hardware coatings shall conform to ASTM A 153/A 153M unless modified.

2.7 CONCRETE

ASTM C 94/C 94M, using 19 mm maximum size aggregate, and having minimum compressive strength of 21 MPa at 28 days. Grout shall consist of one part

portland cement to three parts clean, well-graded sand and the minimum amount of water to produce a workable mix.

2.8 LOCKS

Manually operated locks shall be placed on all gates. Locks shall be provided by the Government. Contractor shall provide lock shroud on all gates to protect lock shackle.

2.9 BARBED WIRE

Barbed wire shall conform to the requirements of ASTM A 121, class 3 zinc coated. The barbed wire shall be 3 strand, 15-1/2 gauge. Barbed wire shall have 4 point barbed type steel wire spaced 127 mm apart. The barbs shall be galvanized and shall be sharp and tightly wrapped about the uniformly twisted line wires. Barbed wire support arms shall be the single arm type and of the design required for the post furnished.

PART 3 EXECUTION

3.1 INSTALLATION

Fence shall be installed to the lines and grades indicated. The area on the secure side of the fence line shall be cleared to the extent specified in Specification Section 01000 SCOPE OF WORK. Line posts shall be spaced equidistant at intervals not exceeding 3 M (10 feet). Terminal (corner, gate, and pull) posts shall be set at abrupt changes in vertical and horizontal alignment. Fabric shall be continuous between terminal posts; however, runs between terminal posts shall not exceed 152 m. Any damage to galvanized surfaces, including welding, shall be repaired with paint containing zinc dust in accordance with ASTM A 780.

3.2 EXCAVATION

If fence post holes are excavated, post holes shall be cleared of loose material and waste material shall be spread where directed by Contracting Officer. The ground surface irregularities along the fence line shall be eliminated to the extent necessary to maintain a 50 mm clearance between the bottom of the fabric and finish grade. If i~~I~~t is not feasible to modify the terrain, then the fence posts may require closer spacing and the bottom of the fence fabric in adjacent panels could vary vertically. If the bottom of adjacent panels vary by 600 mm vertically, a single diagonal truss rod (shown on CSF and Pipe Rail Fence detail on Plate C-19) shall be installed at the shorter fence panel.

3.3 POST INSTALLATION

3.3.1 Posts for Fence

Posts shall be set plumb and in alignment. Contractor proposed foundation design and installation method of line posts shall be submitted by the Contractor to the Government for approval. Designs and methods shall comply with contract requirements. Foundation design and installation shall be appropriate for arctic conditions, including but not limited to measures to minimize jack/frost heave of fence foundations. Unacceptable frost heave is defined as foundation footing (or pile-driven line post) rotation of greater than 10 degrees or change in depth of more than +/- 150mm or +/- 10% over

the warranty period. Fence line posts located in designated wetland areas shall be pile driven in the winter when the ground is frozen a minimum depth of 300mm. See Specification Section 01000 Scope of Work for additional requirements.

3.4 RAILS

3.4.1 Top Rail

Top rail shall be supported at each post to form a continuous brace between terminal posts. Where required, sections of top rail shall be joined using sleeves or couplings that will allow expansion or contraction of the rail. Top rail shall be installed as indicated on the drawings.

3.4.2 Pipe Rail Fence Rails

Pipe Rail Fence rails shall be attached to fence line posts by welding, size and type as indicated on the drawings. Any damage to galvanized surfaces, including welding, shall be repaired with paint containing zinc dust in accordance with ASTM A 780.

3.5 BRACES AND TRUSS RODS

Braces and truss rods shall be installed as indicated and in conformance with the standard practice for the fence furnished. Horizontal (compression) braces and diagonal truss (tension) rods shall be installed on fences over 1.8 m in height. A center brace or 2 diagonal truss rods shall be installed on 3.7 m fences. Braces and truss rods shall extend from terminal posts to line posts. Diagonal braces shall form an angle of approximately 40 to 50 degrees with the horizontal.

3.6 TENSION WIRES

Bottom tension wire shall be installed within the bottom 150 mm of the installed fabric. Tension wire shall be pulled taut and shall be free of sag.

3.7 CHAIN LINK FABRIC

Chain link fabric shall be installed on the side of the post indicated. Fabric shall be attached to terminal posts with stretcher bars and tension bands. Bands shall be spaced at approximately 380 mm intervals. The fabric shall be installed and pulled taut to provide a smooth and uniform appearance free from sag, without permanently distorting the fabric diamond or reducing the fabric height. Fabric shall be fastened to line posts at approximately 380 mm intervals and fastened to all rails and tension wires at approximately 305 mm intervals. Fabric shall be cut by untwisting and removing pickets. Splicing shall be accomplished by weaving a single picket into the ends of the rolls to be joined. The bottom of the installed fabric shall be 50 mm plus or minus 13 mm above the ground.

3.8 BARBED WIRE SUPPORTING ARMS AND BARBED WIRE

3.8.1 General Requirements

Barbed wire supporting arms and barbed wire shall be installed as indicated and as recommended by the manufacturer. Supporting arms shall be anchored

with 9.5 mm diameter plain pin rivets or, at the Contractor's option, with studs driven by low-velocity explosive-actuated tools A minimum of two studs per support arm shall be used. Barbed wire shall be pulled taut and attached to the arms with clips or other means that will prevent easy removal.

3.9 GATE INSTALLATION

Gates shall be installed at the locations indicated by the Contracting Officer. Hinged gates shall be mounted to swing the direction indicated by Contracting Officer. Latches, stops, and keepers shall be installed as required. Padlocks shall be attached to gates or gate posts with chains. Hinge pins, and hardware shall be welded or otherwise secured to prevent removal. Gate frame shall be constructed to meet the profile of the road to meet clearance requirements. Steel Pipe Swing Gates with 3 meter and 4.5 meter spans shall each have a galvanized steel post installed to lock the gates open to when gate is fully opened.

3.10 GROUNDING

Fences crossed by overhead powerlines in excess of 600 volts shall be grounded as specified in Section 13100A LIGHTNING PROTECTION SYSTEM. Fences shall be grounded on each side of all gates, at each corner, at the closest approach to each building located within 15 m of the fence, and where the fence alignment changes more than 15 degrees. Grounding locations shall not exceed 198 m. Each gate panel shall be bonded with a flexible bond strap to its gate post. Fences crossed by powerlines of 600 volts or more shall be grounded at or near the point of crossing and at distances not exceeding 45 m on each side of crossing. Ground conductor shall consist of No. 8 AWG solid copper wire. Grounding electrodes shall be 19 mm by 3.0 m long copper-clad steel rod. Electrodes shall be driven into the earth so that the top of the electrode is at least 152 mm below the grade. Where driving is impracticable, electrodes shall be buried a minimum of 305 mm deep and radially from the fence. The top of the electrode shall be not less than 610 mm or more than 2.4 m from the fence. Ground conductor shall be clamped to the fence and electrodes with bronze grounding clamps to create electrical continuity between fence posts, fence fabric, and ground rods. After installation the total resistance of fence to ground shall not be greater than 25 ohms. When the required ground resistance is not met, additional electrodes shall be provided interconnected with grounding conductors to achieve the specified ground resistance. The additional electrodes will be up to three, 3.0 m rods spaced a minimum of 3.0 m apart. If the resultant resistance exceeds 25 ohms measured not less than 48 hours after rainfall, the Contracting Officer shall be notified immediately.

Attchment follows

REVISIONS			STATE	PROJECT DESIGNATION	YEAR	SHEET NO	TOTAL SHEETS
No.	Date	Description	ALASKA	I-0A1-6 (8)	1988	4	13
1	11-3-88	NOTE MODIFIED					

ADDENDUM NO. 3
ATTACHMENT NO. 3

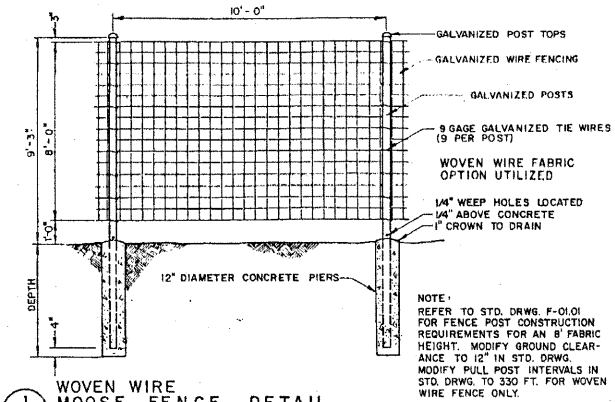

NOTE:
REFER TO STD. DRWG. F-01.01 FOR FENCE POST CONSTRUCTION REQUIREMENTS FOR AN 8' FABRIC HEIGHT. MODIFY GROUND CLEARANCE TO 12" IN STD. DRWG. MODIFY PULL POST INTERVALS IN STD. DRWG. TO 330 FT. FOR WOVEN WIRE FENCE ONLY.

1/D1 WOVEN WIRE MOOSE FENCE DETAIL
(SEE STD. DRAWING F-01.01 FOR CHAIN LINK ALTERNATIVE)

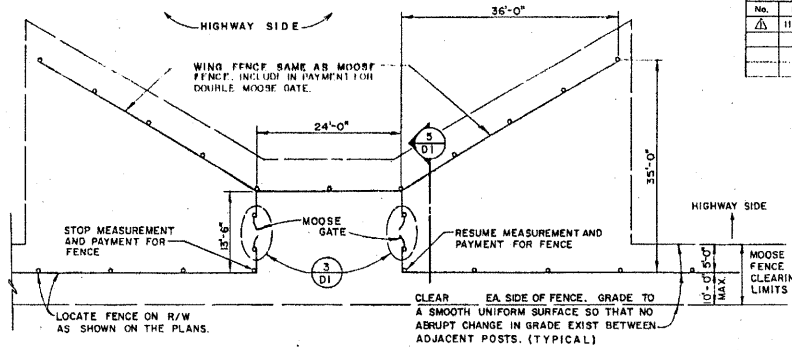

2/D1 DOUBLE MOOSE GATE PLAN

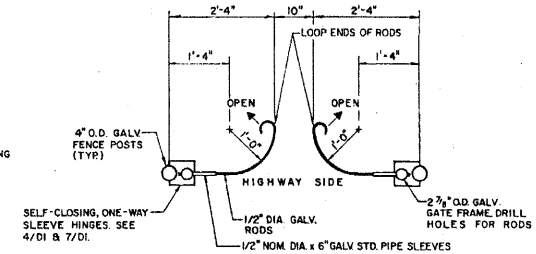

3/D1 MOOSE GATE DETAIL

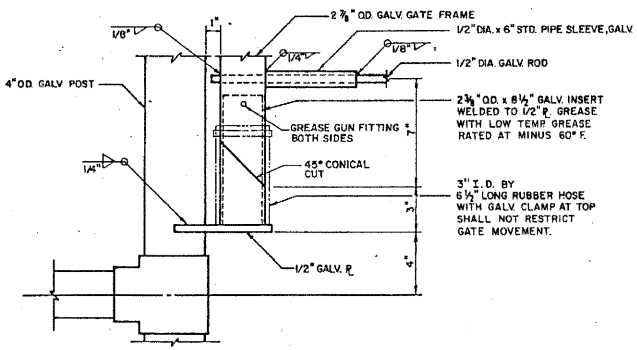

4/D1 LOWER MOOSE GATE HINGE

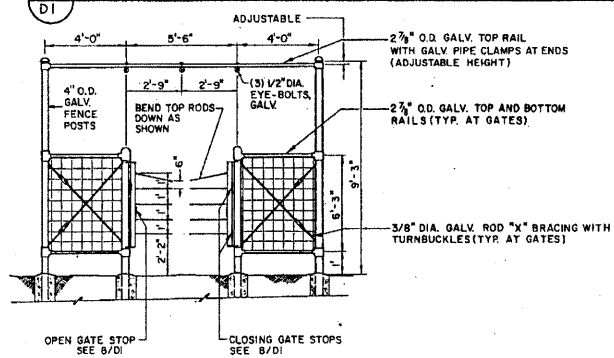

5/D1 TYPICAL MOOSE GATE ELEVATION

NOTES:

1. PULL POSTS AND BRACES SHALL BE SPACED AT 250' INTERVALS ALONG THE FENCE. SEE STANDARD DRAWING F-01.01 FOR PULL POST, CORNER POST AND TERMINAL POST DETAILS.
2. FABRIC SHALL BE STRETCHED TIGHTLY TO A SMOOTH UNIFORM APPEARANCE.
3. CONCRETE SHALL BE CLASS W.
4. ALL WIRE, POSTS AND HARDWARE SHALL BE GALVANIZED. WEIGHTS, SIZES AND GAGES SPECIFIED ARE MINIMUMS FOR GALVANIZING.
5. 1/2" x 8' COPPER CLAD GROUND RODS WITH #4 GROUND WIRES SHALL BE PLACED AT MINIMUM INTERVALS OF 400 FEET ALONG THE FENCE. GROUND WIRE SHALL BE ATTACHED TO FENCE FABRIC BY MEANS OF A SPLIT BOLT.
6. MOOSE FENCING SHALL CONSIST OF EITHER WOVEN WIRE OR CHAIN-LINK FABRIC.
7. MOOSE FENCE FABRIC SHALL BE ATTACHED OPPOSITE TO THE HIGHWAY SIDE OF THE POSTS. POSTS SHALL HAVE KNOBS, PUNCHED WEBS OR CORRUGATED EDGE TO HOLD THE WOVEN WIRE FENCING.
8. WING FENCES AND OTHER FENCING AT MOOSE GATES AND VEHICLE GATES ARE NOT INCLUDED IN THE LENGTHS AND QUANTITIES LISTED ON THE PLANS AND SHOULD BE CONSIDERED AS PART OF THE GATE.
9. FENCE POSTS MAY BE TYPE I OR TYPE II PER SECTION 710-2.05.
10. THE WIRE FENCING SHALL CONSIST OF AN 8 FT. HIGH, 6" x 6" MESH OF WIRE NOT SMALLER THAN 9 GAGE WITH A TWISTED FRICTION TYPE JOINT AT EACH CONTACT POINT. THE FENCE MATERIAL SHALL BE GALVANIZED TO A RETENTION OF NOT LESS THAN ~~THAN 1.2 OUNCES PER SQUARE FOOT FOR CHAIN LINK FABRIC OR~~ 0.8 OUNCES PER SQUARE FOOT FOR WOVEN WIRE FABRIC. IT WILL BE PERMISSIBLE TO USE TWO SECTIONS OF 4 FT. HEIGHT JOINED LONGITUDINALLY WITH A CONTINUOUS 9 GAGE GALVANIZED WIRE WOVEN NEATLY THROUGH THE MESH AND WRAPPED EVERY 6 INCHES OR WITH 9 GAGE HOG RINGS SPACED AT 6 INCH INTERVALS.

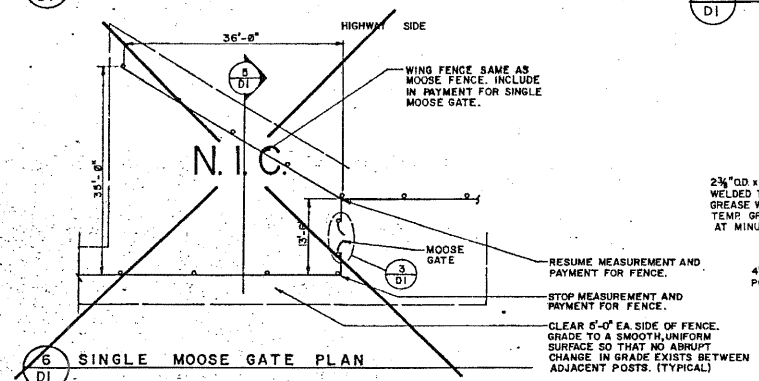

6/D1 SINGLE MOOSE GATE PLAN

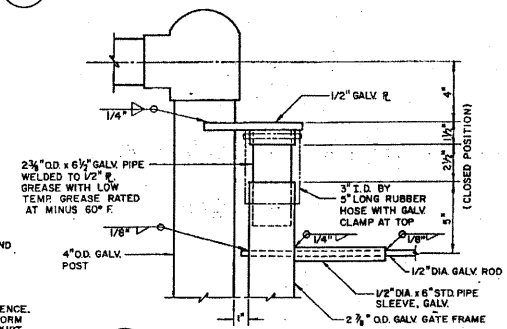

7/D1 UPPER MOOSE GATE HINGE

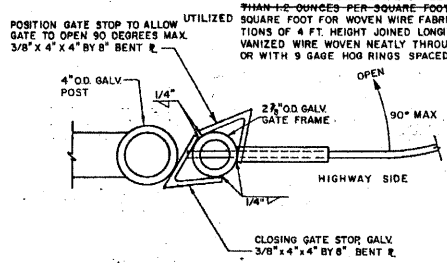

8/D1 GATE STOP

STATE OF ALASKA
DEPARTMENT OF TRANSPORTATION AND PUBLIC FACILITIES

GLENN HIGHWAY FENCING AND ILLUMINATION

MOOSE FENCE DETAILS

8-29-88

02821-7

End of Section

This page intentionally blank