NOTES:

1. DEMING LEVEE PROTECTS INFRASTRUCTURE LOCATED VERY CLOSE TO LEVEE. NOTE LOCATION OF NOOKSACK TRIBE CASINO DRAINFIELDS AND MT. BAKER SCHOOL DISTRICT SEWAGE LAGOONS.

LOCATION MAP
DEMING LEVEE

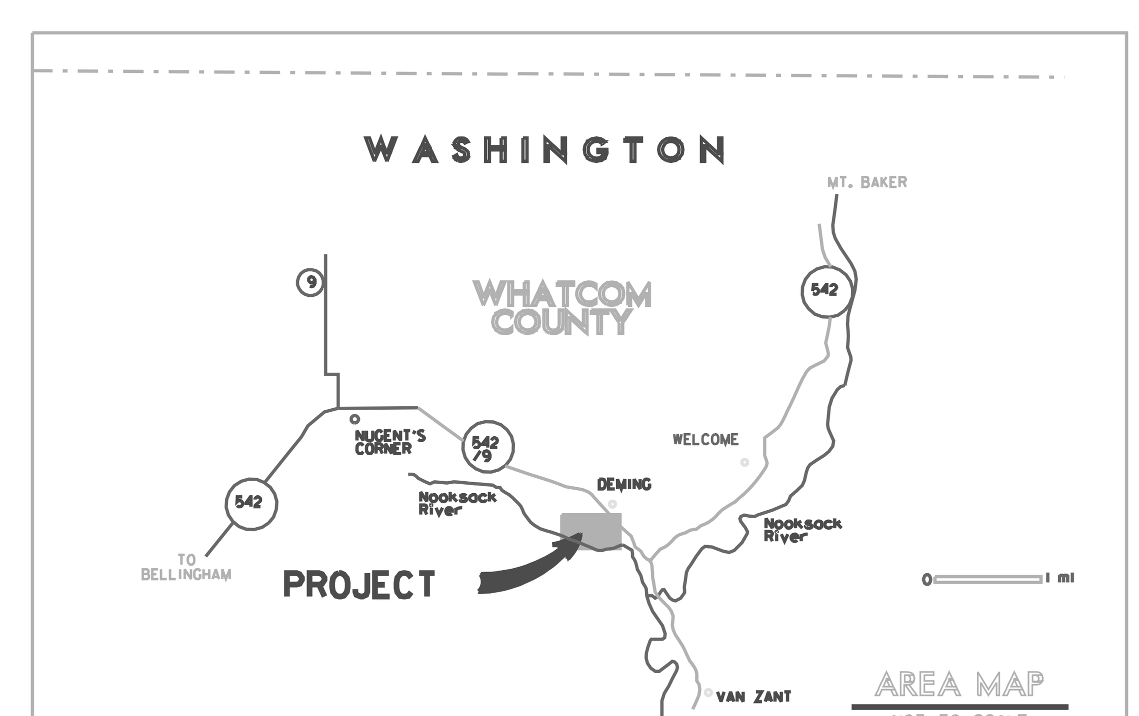

US Army Corps
of Engineers
Seattle District

Symbol	Description	Date	Appr.	Symbol	Description
		/ /			

Designed by: DESJARDIN
Drawn by: LEJON
Checked by:
Date: 5 AUG 2008
File # E-52-44-100
Rev.

U.S.ARMY ENGINEER DISTRICT,SEATTLE
CORPS OF ENGINEERS
SEATTLE, WASHINGTON
Prepared by: CENWS-EC-DB-CS

MIDDLE FORK NOOKSACK RIVER
PL 84-99 LEVEE REPAIR
DEMING
LEVEE
WHATCOM COU NTY
WA

Plate
number:
C-101
Sheet 1 of 7

DATE AND TIME PLOTTED: $$$DATE$$$$ $TIME
DESIGN FILE: $$$DGN$$$$$$$$$$$$$$$$$$$$$$$$$$$$$$$$$$$$$$

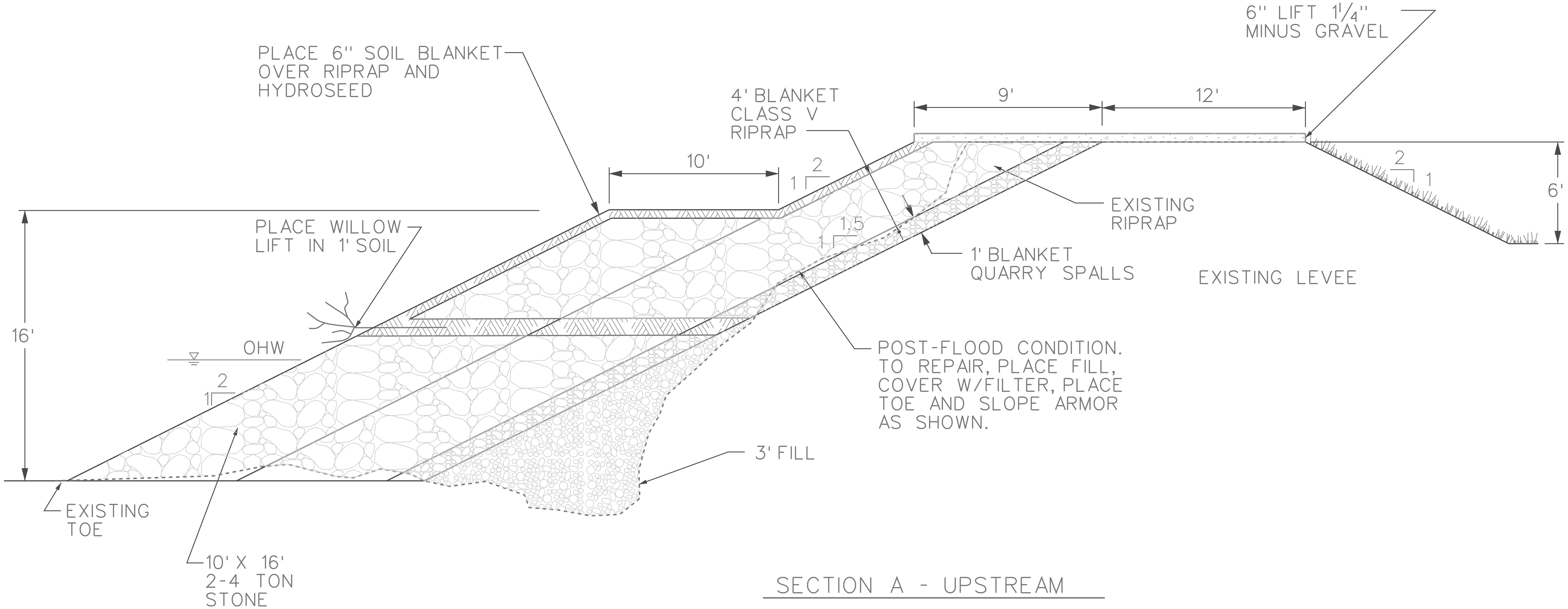

SECTION A - UPSTREAM

250' EXISTING SLOPE DAMAGE, TOE DAMAGE, SLOPE DEGRADED TO 1.5H:1V RETURN TO PRE-FLOOD CONDITION 2H:1V SLOPES WITH 10' X 16' TOE

PLACE WILLOW LIFT IN 1' THICK LIFT OF SOIL ALONG 450' LENGTH. PLACE WILLOWS 6" ON CENTERS ABOVE OHW, AS SHOWN.

N
PLAN NORTH

US Army Corps of Engineers
Seattle District

Symbol	Description	Date	Appr.
		/ /	

Designed by: DESJARDIN
Drawn by: LEJON
Checked by:
Date: 5 AUG 2008
File # E-52-44-100
Rev.

U.S.ARMY ENGINEER DISTRICT, SEATTLE
CORPS OF ENGINEERS
SEATTLE, WASHINGTON
Prepared by: CENWS-EC-DB-CS

MIDDLE FORK NOOKSACK RIVER
PL 84-99 LEVEE REPAIR
DEMING LEVEE
SECTION A
UPSTREAM
WHATCOM COU NTY WA

Plate number: C-102
Sheet 2 of 7

$$$DGN$$
DESIGN FILE:
DATE AND TIME PLOTTED: $$$DATE$$$$ $TIME

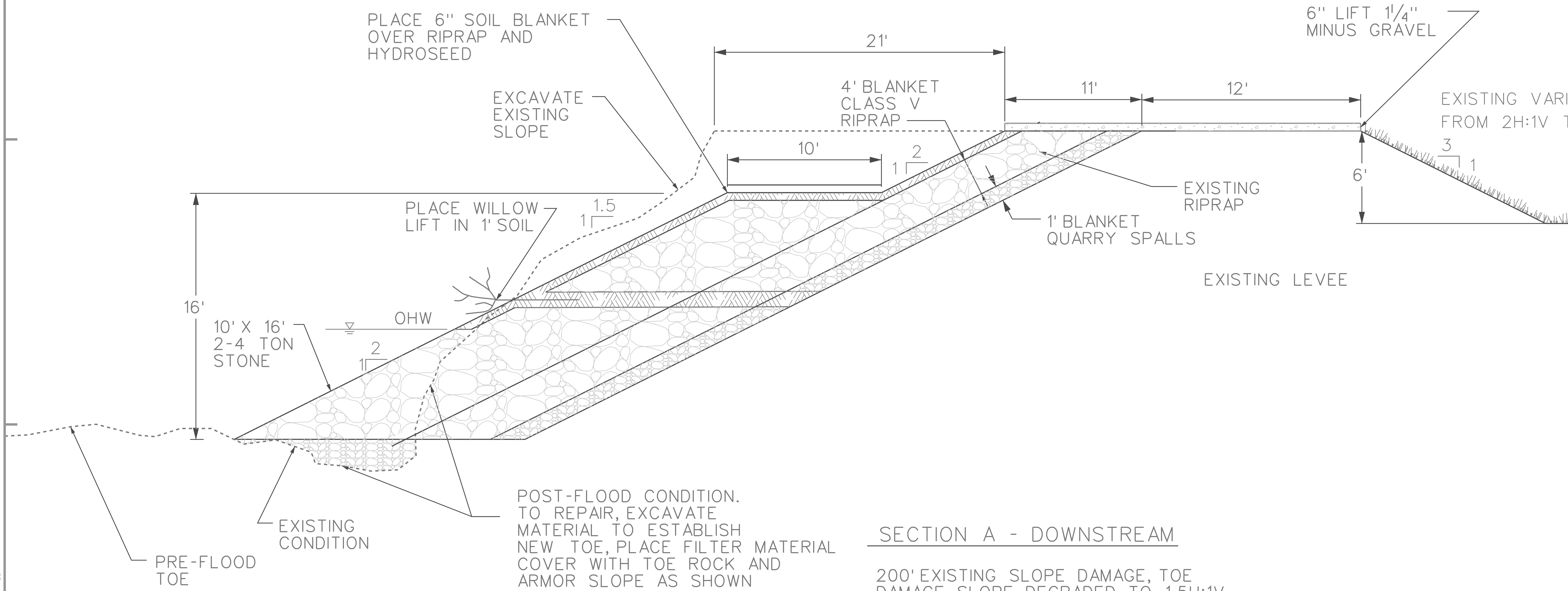

SECTION A - DOWNSTREAM

200' EXISTING SLOPE DAMAGE, TOE DAMAGE, SLOPE DEGRADED TO 1.5H:1V RETURN TO PRE-FLOOD CONDITION 2H:1V SLOPES WITH 10' X 16' TOE

PLACE WILLOW LIFT IN 1' THICK LIFT OF SOIL ALONG 450' LENGTH. PLACE WILLOWS 6" ON CENTERS ABOVE OHW, AS SHOWN.

N
PLAN NORTH

US Army Corps of Engineers
Seattle District

Symbol	Description	Date	Appr.	Symbol	Description
		/ /			

Designed by: DESJARDIN
Drawn by: LEJON
Checked by:
Date: 5 AUG 2008
File # E-52-44-100
Rev.

U.S. ARMY ENGINEER DISTRICT, SEATTLE
CORPS OF ENGINEERS
SEATTLE, WASHINGTON
Prepared by: CENWS-EC-DB-CS

MIDDLE FORK NOOKSACK RIVER
PL 84-99 LEVEE REPAIR
DEMING LEVEE
SECTION A
DOWNSTREAM
WHATCOM COUNTY WA

Plate number:
C-103
Sheet 3 of 7

DATE AND TIME PLOTTED: $$$DATE$$$$ $TIME DESIGN FILE: $$$DGN$$$

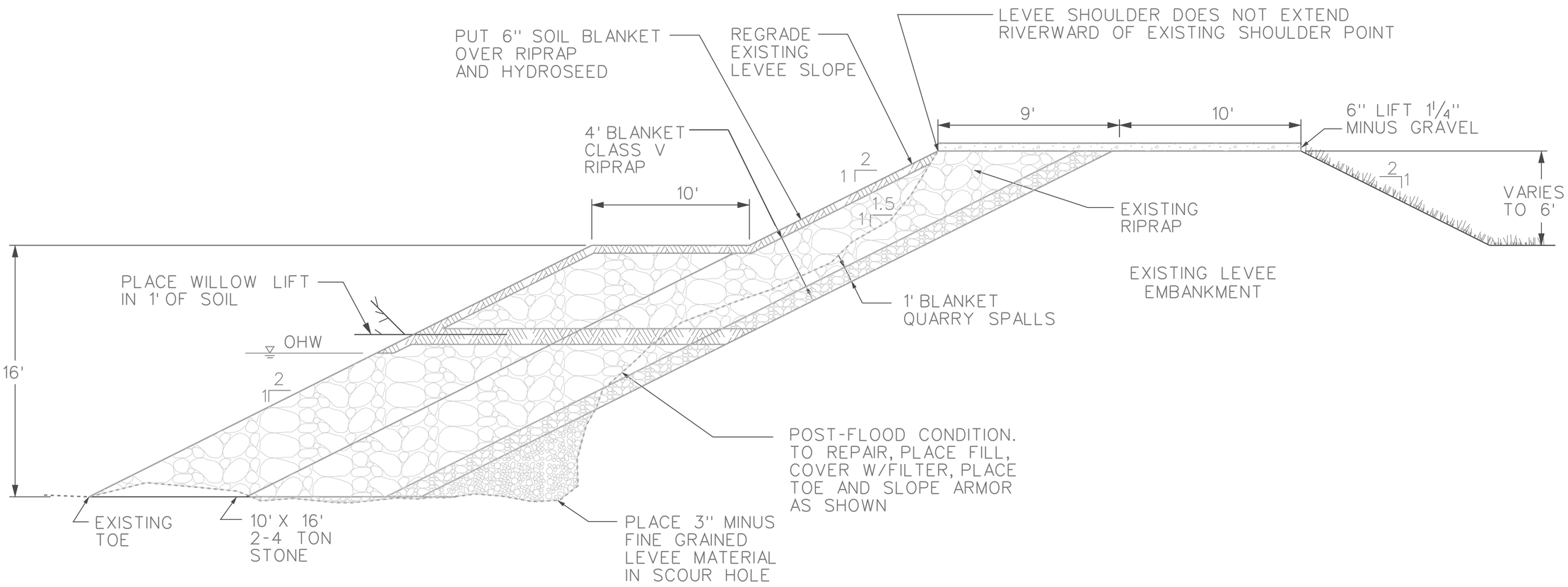

SECTION B

850' EXISTING LEVEE, TOE DAMAGE, SLOPE DAMAGE REPAIRED IN FLOOD. RETURN TO PRE-FLOOD CONDITION WITH 2H:1V SLOPES AND 10' X 16' TOE

PLACE WILLOW LIFT IN 1' THICK LIFT OF SOIL ALONG 850' LENGTH. PLACE WILLOW 6" ON CENTERS ABOVE OHW, AS SHOWN.

N
PLAN NORTH

US Army Corps of Engineers
Seattle District

Symbol	Description	Date	Appr.	Symbol	Description
		/ /			

Designed by: DESJARDIN
Drawn by: LEJON
Checked by:
Date: 5 AUG 2008
File # E-52-44-100
Rev.

U.S. ARMY ENGINEER DISTRICT, SEATTLE
CORPS OF ENGINEERS
SEATTLE, WASHINGTON
Prepared by: CENWS-EC-DB-CS

MIDDLE FORK NOOKSACK RIVER
PL 84-99 LEVEE REPAIR
DEMING LEVEE
SECTION B
WHATCOM COUNTY WA

Plate number:
C-104
Sheet 4 of 7

DATE AND TIME PLOTTED: $$$DATE$$$ $TIME
DESIGN FILE: $$$DGN$$$

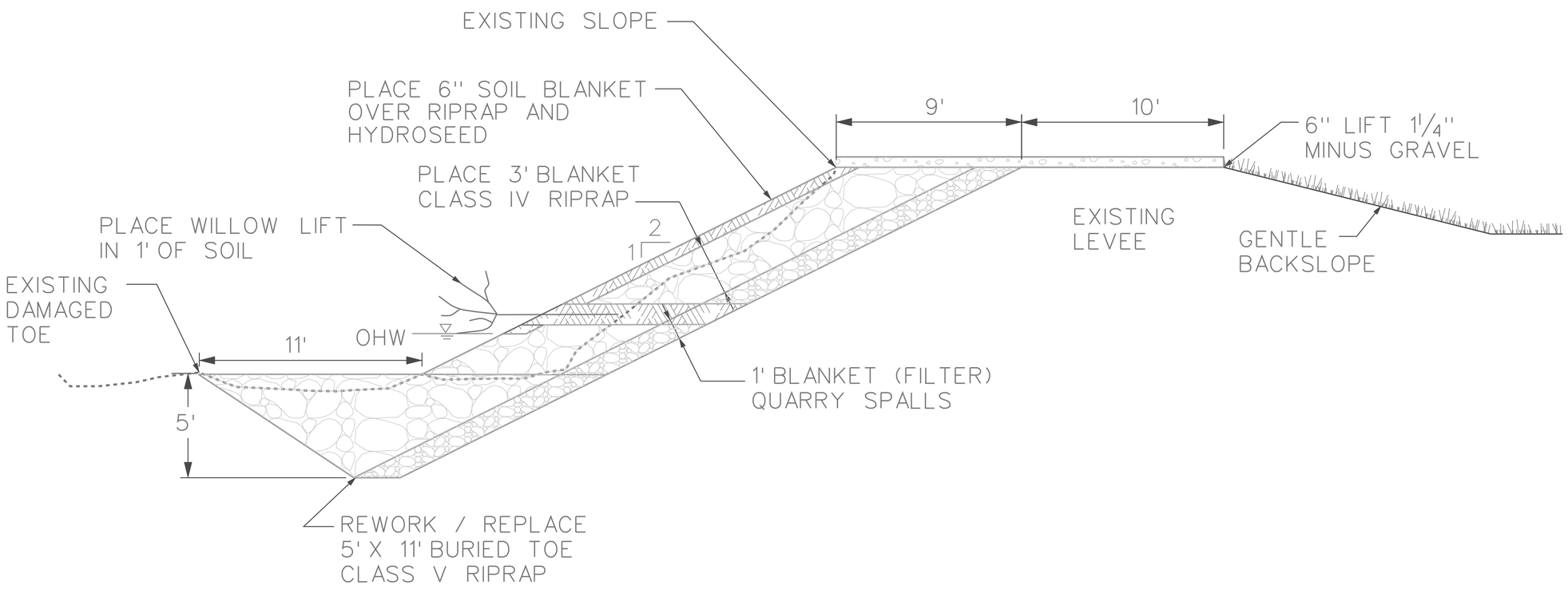

SECTION C

HIGH FLOW CHANNEL, 1,000 FT. CLEAR AND GRUB. PLACE TREES IN CHANNEL TO ACT AS COVER FOR FISH IN CHANNEL. EXCAVATE SILTED SLOPE, (DETERMINE QUANTITY OF RIPRAP TO REUSE) PLACE EXCAVATED MATERIAL ON BACKSLOPE OF SITES A AND B. PLACE 1' BLANKET FILTER QUARRY SPALLS. CREATE/REPLACE 5' X 11' BURIED TOE USING CLASS V RIPRAP AND PLACE 3' BLANKET CLASS IV RIPRAP ON LEVEE SLOPE

PLACE WILLOW LIFT IN 1' THICK LIFT OF SOIL ALONG 1,000' LENGTH. PLACE WILLOWS 6" ON CENTERS ABOVE OHW, AS SHOWN.

N
PLAN NORTH

US Army Corps of Engineers
Seattle District

Symbol	Description	Date	Appr.	Symbol	Description
		/ /			

Designed by: DESJARDIN
Drawn by: LEJON
Checked by:
Date: 5 AUG 2008
File: E-52-44-100
Rev.

U.S. ARMY ENGINEER DISTRICT, SEATTLE
CORPS OF ENGINEERS
SEATTLE, WASHINGTON
Prepared by: CENWS-EC-DB-CS

MIDDLE FORK NOOKSACK RIVER
PL 84-99 LEVEE REPAIR
DEMING LEVEE
SECTION C
WHATCOM COUNTY WA

Plate number:
C-105
Sheet 5 of 7

DESIGN FILE: DESJARDIN
DATE AND TIME PLOTTED: $$DATE$$$$ $TIME

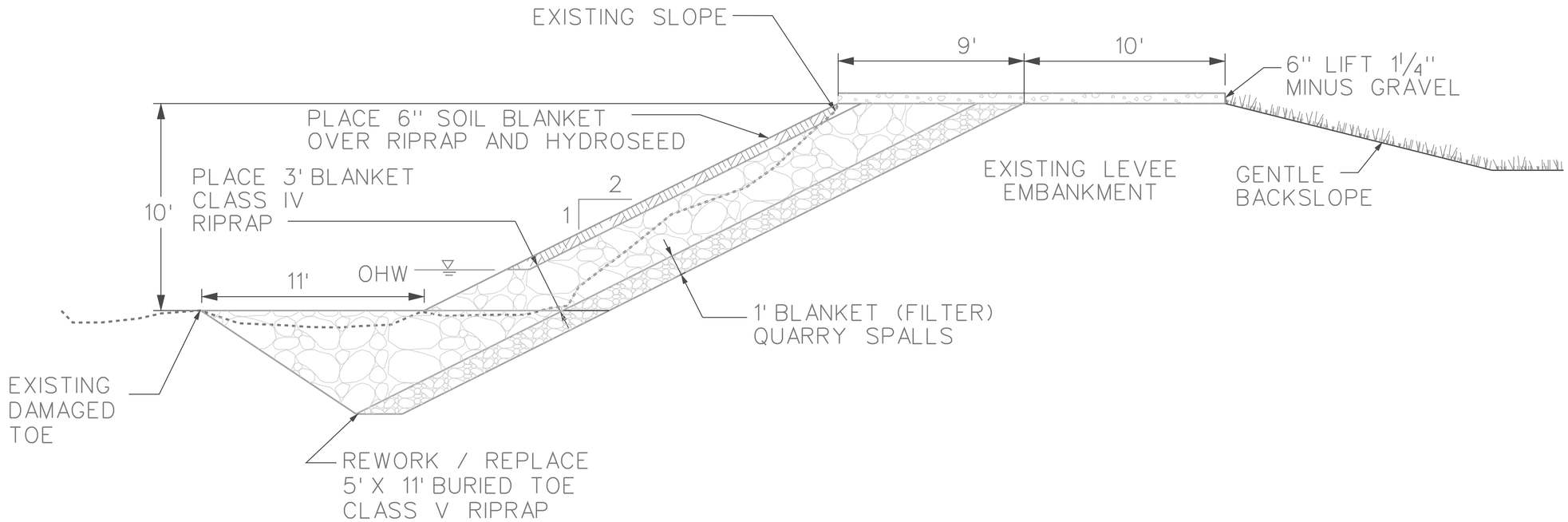

SECTION D

HIGH FLOW CHANNEL, 700 FT. CLEAR AND GRUB SITE, REGRADE EXISTING SLOPE, REWORK / REPLACE EXISTING BURIED TOE. PLACE TREES ON GRAVEL BAR

N

PLAN NORTH

US Army Corps of Engineers
Seattle District

Symbol	Description	Date	Appr.	Symbol	Description
		/ /			

Designed by: DESJARDIN
Drawn by: LEJON
Checked by:
Date: 5 AUG 2008
File # E-52-44-100
Rev.

U.S. ARMY ENGINEER DISTRICT, SEATTLE
CORPS OF ENGINEERS
SEATTLE, WASHINGTON
Prepared by: CENWS-EC-DB-CS

MIDDLE FORK NOOKSACK RIVER
PL 84-99 LEVEE REPAIR
DEMING LEVEE
SECTION D
WHATCOM COUNTY WA

Plate number: C-106
Sheet 6 of 7

DESIGN FILE: $$$$DGN$$$$
DATE AND TIME PLOTTED: $$$$DATE$$$$ $TIME

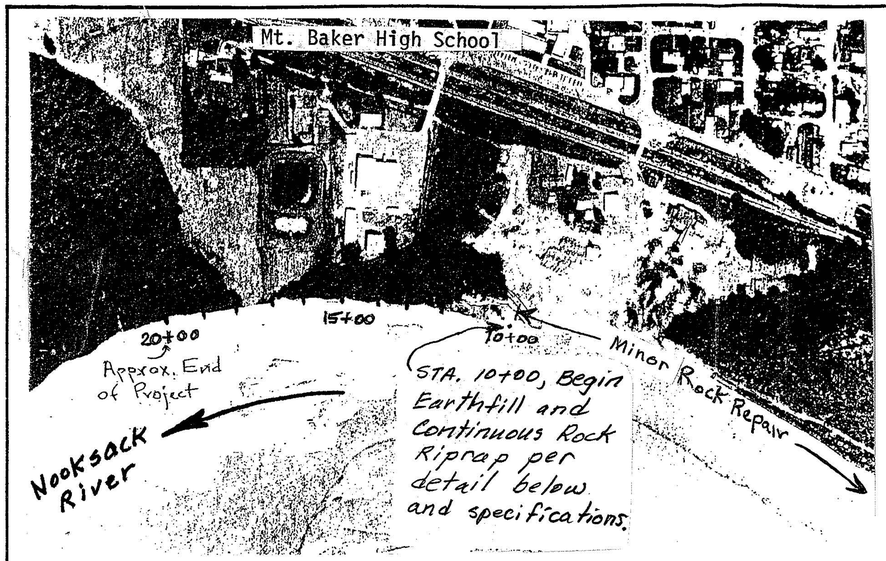

N

NOTE: Minor rock repair consists of repair of localized areas in the existing riprap where rock has been displaced. Rock for minor rock repair shall be placed in accordance with the specifications and to the extent as directed by the engineer.

GENERAL PROVISIONS

(1) The project will be constructed to the location and dimension shown on this plan and as staked in the field.

(2) All permits and easements for this project will be obtained by the owner or sponsor before construction.

(3) Vegetation within the construction area that is to be retained will be marked on the site.

(4) Rock Riprap Gradation

SIZE (in inches)	Percent Passing (by weight)
48"	100
32"	60-100
16"	20-50
8"	5-30
4"	0-10

(5) Bedding shall be a well graded 4" minus sand-gravel mixture.

SITE PLAN

SCALE 1" = 400'

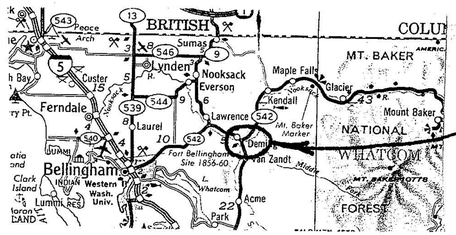

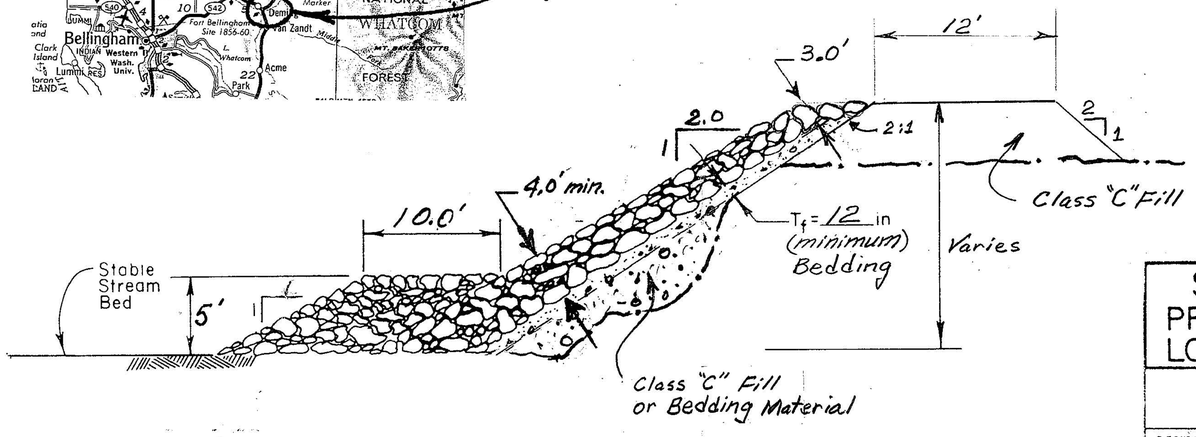

TYPICAL X-SECTION

STREAM BANK PROTECTION	
PROJECT: Mt. Baker H.S. Emergency WS Project	
LOCATION: SW 1/4 Sec. 31 R5E T39N (Deming)	
U. S. DEPARTMENT OF AGRICULTURE SOIL CONSERVATION SERVICE	
DESIGNED BY	APPROVED BY
CHECKED BY	DRAWING NO. -15 SCS Project Class 7
DATE:	SHEET OF

Form SCS-313A (March 1957)

US Army Corps of Engineers
Seattle District

Symbol	Description	Date	Appr.	Symbol	Description
		/ /			

Designed by: DESJARDIN
Drawn by: LEJON
Checked by:
Date: 5 AUG 2008
File # E-52-44-100
Rev.

U.S. ARMY ENGINEER DISTRICT, SEATTLE
CORPS OF ENGINEERS
SEATTLE, WASHINGTON
Prepared by: CENWS-EC-DB-CS

MIDDLE FORK NOOKSACK RIVER
PL 84-99 LEVEE REPAIR
DEMING LEVEE
1990 NRCS
AS-BUILT
WHATCOM COUNTY WA

Plate number:
C-107
Sheet 7 of 7

DATE AND TIME PLOTTED: $$$DATE$$$$ $TIME DESIGN FILE:

N
PLAN NORTH