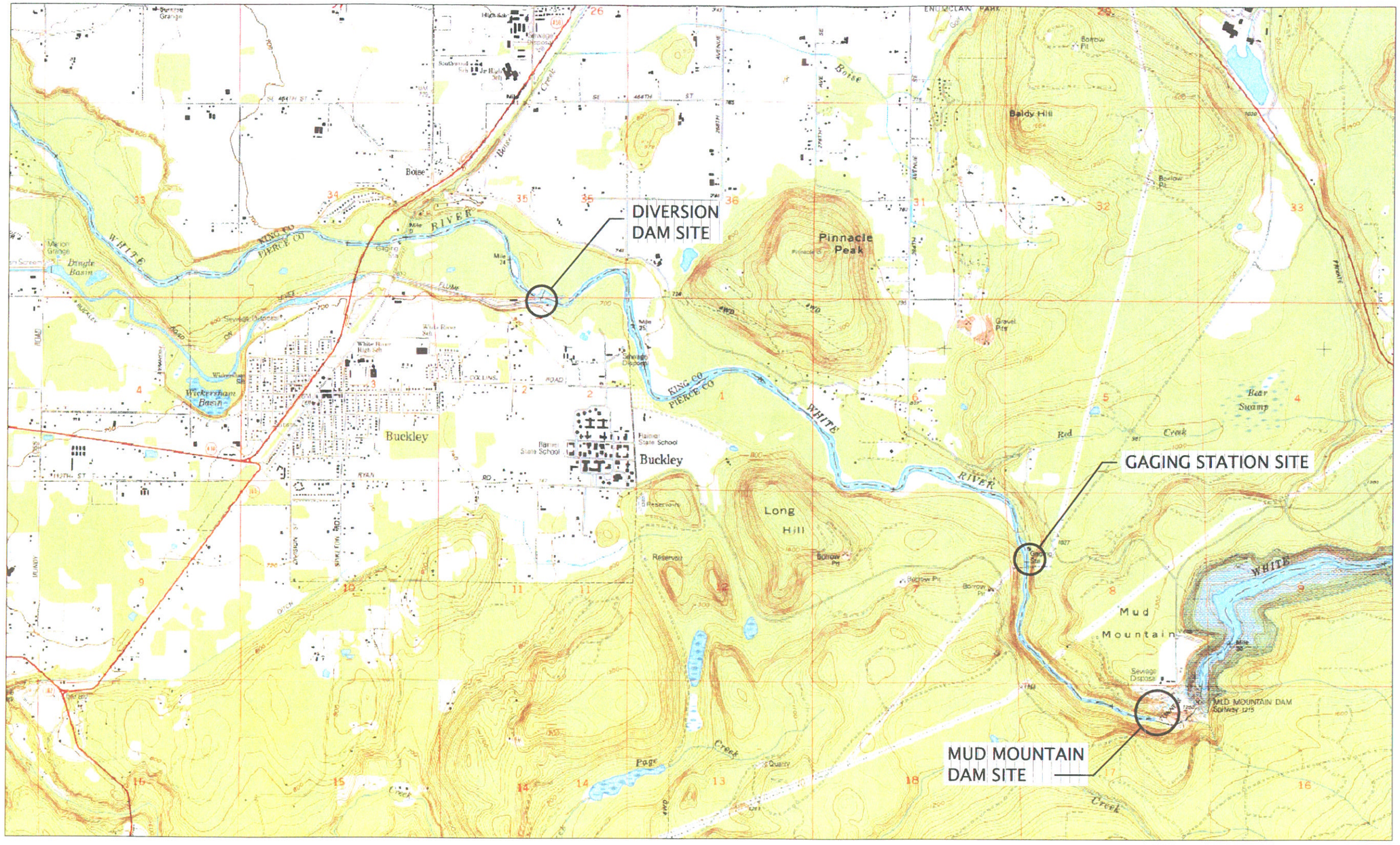

FISH TRAP SITES

0 1/2 1 mile

1" = 1/2 MILE

US Army Corps of Engineers
Portland District

Revision	Date	Description	By

Designed by: F. POSTLEWAITE
Date: 01/16/03
Drawn by: S. NGUYEN
CADD File Name:
Checked by: XXXXX
Technical Manager: XXXXX
Submitted by: XXXXX
Acting Chief,Struct.& Arch.Design

U.S. ARMY ENGINEER DISTRICT
CORPS OF ENGINEERS
SEATTLE, WASHINGTON

MWH

WHITE RIVER

SEATTLE - WASHINGTON

MUD MOUNTAIN DAM
FISH PASSAGE INVESTIGATION
CONCEPTUAL DESIGN REPORT

FISH TRAP SITES

DRAWING STATUS:
DRAFT

DRAWING NO.

PLATE
1

DGNSPEC

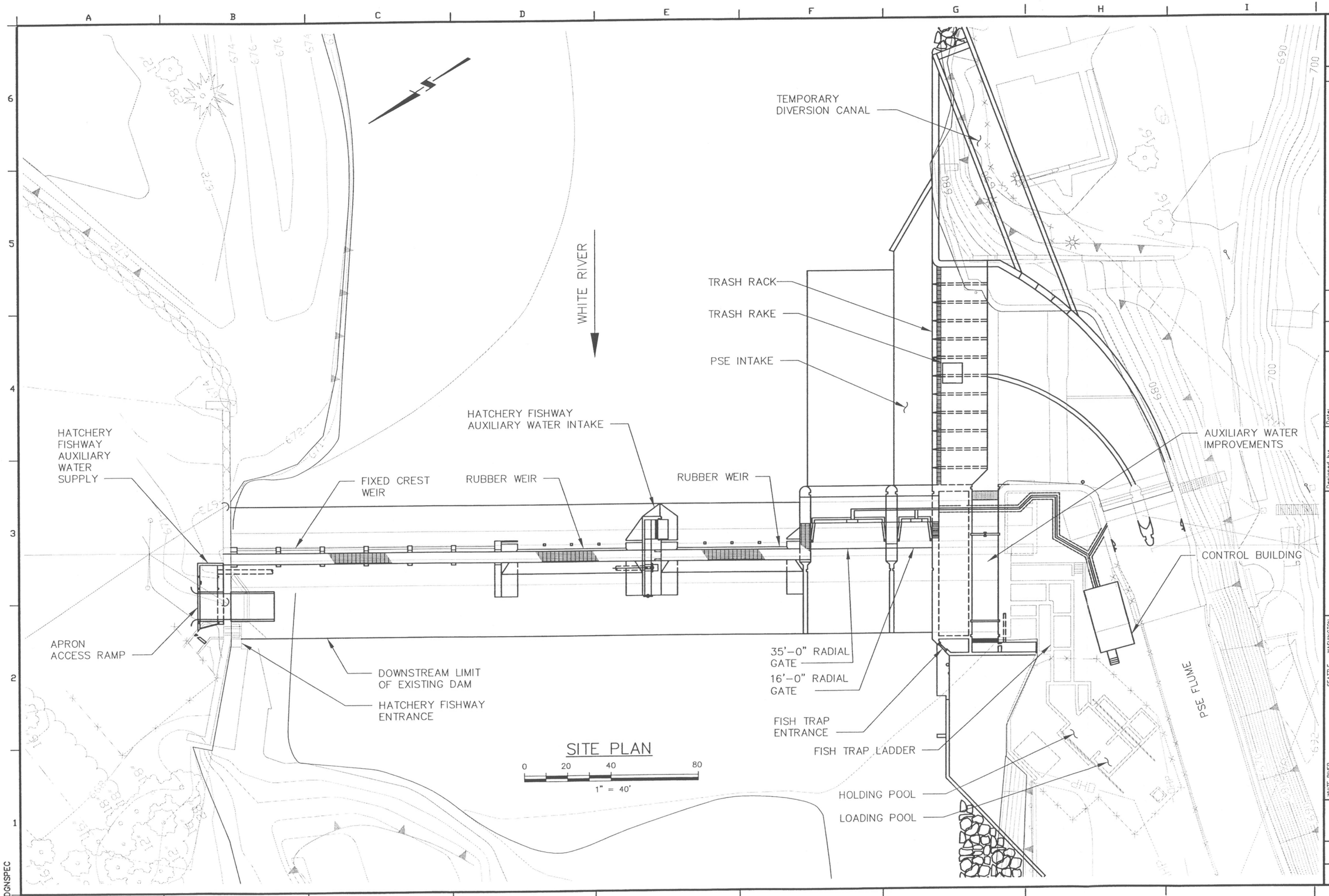

US Army Corps of Engineers
Portland District

Revision	Date	Description	By
			XXX

Designed by: F. POSTLEWAITE
Date: 01/16/03
Drawn by: S. NGUYEN
CADD File Name:
Checked by: XXXXXX
Technical Manager: XXXXX
Submitted by: NAME Acting Chief,Struct.& Arch.Design

U.S. ARMY ENGINEER DISTRICT
CORPS OF ENGINEERS
SEATTLE, WASHINGTON

MWH

WHITE RIVER
SEATTLE - WASHINGTON
MUD MOUNTAIN DAM
FISH PASSAGE INVESTIGATION
CONCEPTUAL DESIGN REPORT
REFERENCE PLAN

DRAWING STATUS:
DRAFT

DRAWING NO.

PLATE
2

DGNSPEC

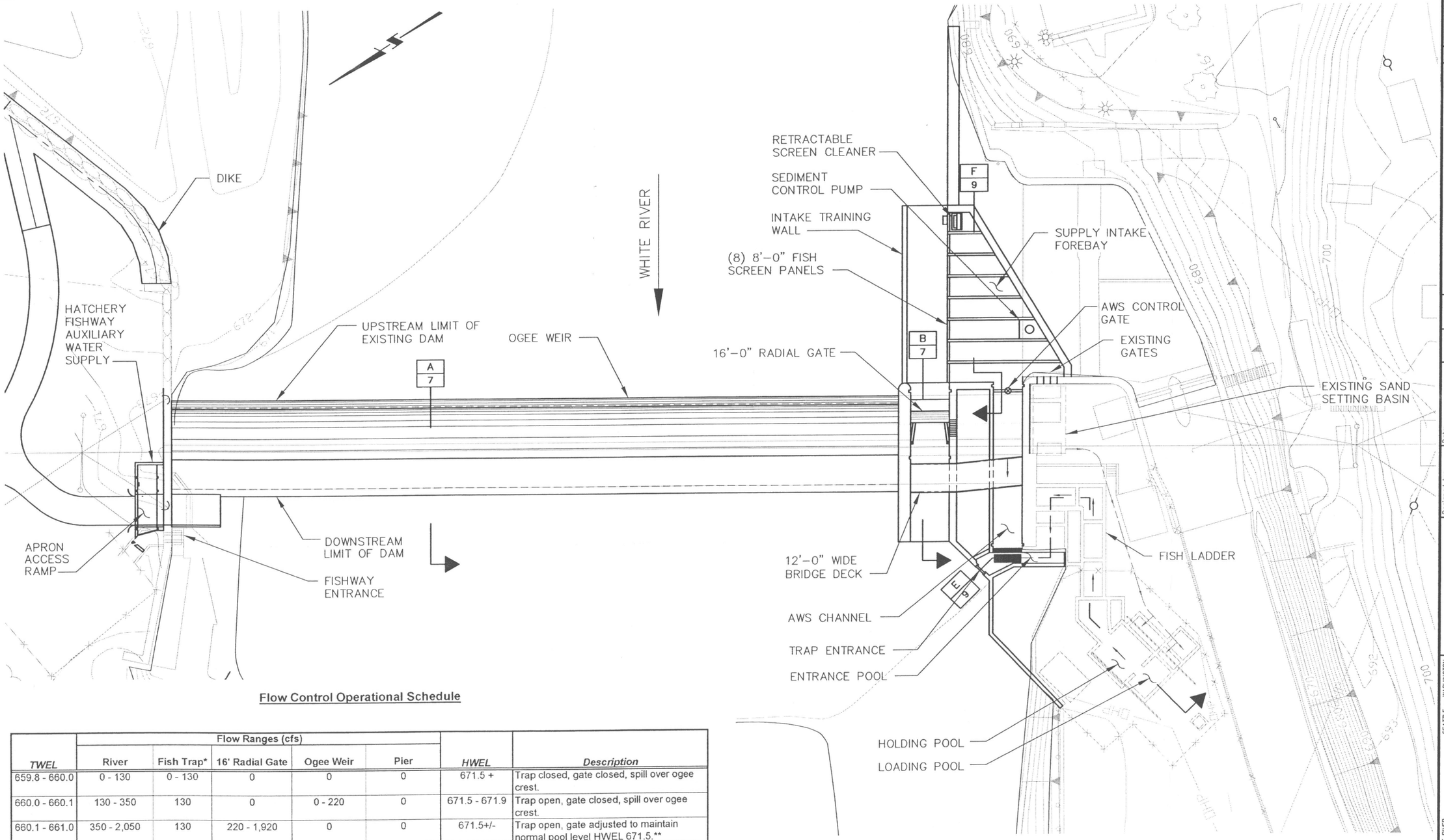

ALTERNATIVE 1 – SITE PLAN

0 20 40 80

1" = 40'

Flow Control Operational Schedule

TWEL	Flow Ranges (cfs) River	Fish Trap*	16' Radial Gate	Ogee Weir	Pier	HWEL	Description
659.8 - 660.0	0 - 130	0 - 130	0	0	0	671.5 +	Trap closed, gate closed, spill over ogee crest.
660.0 - 660.1	130 - 350	130	0	0 - 220	0	671.5 - 671.9	Trap open, gate closed, spill over ogee crest.
660.1 - 661.0	350 - 2,050	130	220 - 1,920	0	0	671.5+/-	Trap open, gate adjusted to maintain normal pool level HWEL 671.5.**
661.0 - 662.3	2,050 - 4,000	130	1,920 - 2,390	0 - 1,480	0	671.5 - 672.8	Trap open, gate fully open, spill over ogee crest.
662.3 - 669.6	4,000 - 24,800	0	2,430 - 4,070	1,560 - 20,640	0 - 90	672.8 - ~678.8	Trap closed, gate fully open, spill over ogee crest.

* Fish Trap flows assume supply flow demand for the right bank hatchery ladder is included.
** Minimum gate opening 1.6' to achieve velocity barrier on apron, HWEL level with spill crest.

US Army Corps of Engineers
Portland District

Revision	Date	Description	By
			XXX

Designed by: F. POSTLEWAITE
Drawn by: S. NGUYEN
Checked by: XXXXXX
Date: 01/16/03
CADD File Name:
Technical Manager: XXXXX
Submitted by: XXXXXXX
Acting Chief,Struct.& Arch.Design

U.S. ARMY ENGINEER DISTRICT
CORPS OF ENGINEERS
SEATTLE, WASHINGTON

MWH

WHITE RIVER
SEATTLE – WASHINGTON
MUD MOUNTAIN DAM
FISH PASSAGE INVESTIGATION
CONCEPTUAL DESIGN REPORT
ALTERNATIVE 1
PLAN

DRAWING STATUS:
DRAFT

DRAWING NO.

PLATE
3

DGNSPEC

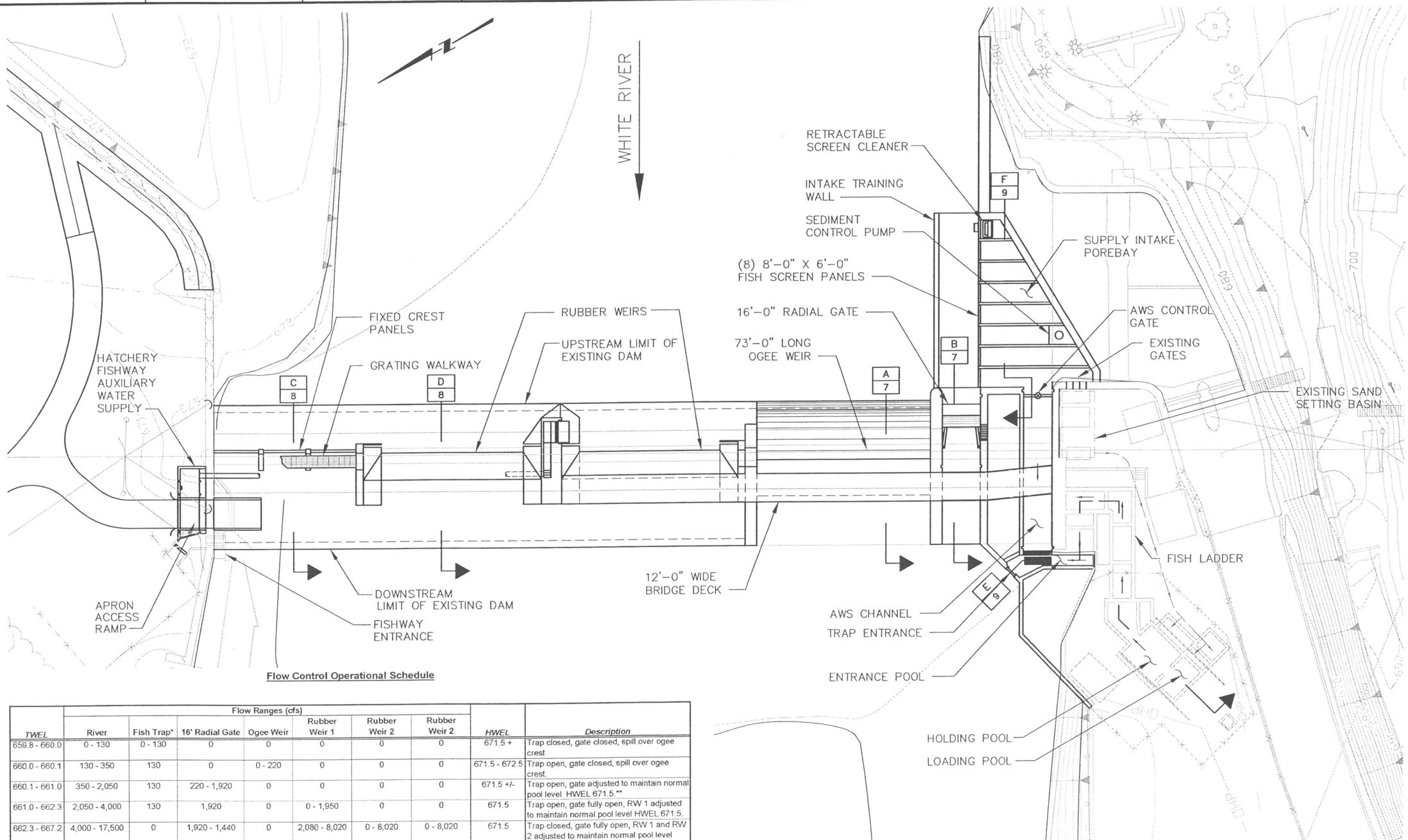

Flow Control Operational Schedule

TWEL	Flow Ranges (cfs) River	Fish Trap*	16' Radial Gate	Ogee Weir	Rubber Weir 1	Rubber Weir 2	Rubber Weir 2	HWEL	Description
659.8 - 660.0	0 - 130	0 - 130	0	0	0	0	0	671.5 +	Trap closed, gate closed, spill over ogee crest.
660.0 - 660.1	130 - 350	130	0	0 - 220	0	0	0	671.5 - 672.5	Trap open, gate closed, spill over ogee crest.
660.1 - 661.0	350 - 2,050	130	220 - 1,920	0	0	0	0	671.5 +/-	Trap open, gate adjusted to maintain normal pool level HWEL 671.5.**
661.0 - 662.3	2,050 - 4,000	130	1,920	0	0 - 1,950	0	0	671.5	Trap open, gate fully open, RW 1 adjusted to maintain normal pool level HWEL 671.5.
662.3 - 667.2	4,000 - 17,500	0	1,920 - 1,440	0	2,080 - 8,020	0 - 8,020	0 - 8,020	671.5	Trap closed, gate fully open, RW 1 and RW 2 adjusted to maintain normal pool level HWEL 671.5.
667.2 - 668.1	17,500 - 20,100	0	1,440 - 1,660	0 - 240	8,020 - 9,170	8,020 - 9,170	8,020 - 9,170	671.5 - 672.5	Trap closed, gate fully open, RW's both down, spill over ogee crest, no spill over fixed-crest panels.
668.1 - 669.6	20,100 - 24,800	0	1,660 - 1,960	240 - 1,010	9,170 - 10,710	9,170 - 10,711	9,170 - 10,711	672.5 - 674.1	Trap closed, gate fully open, RW's both down, spill over ogee crest, spill over fixed-crest panels.

* Fish Trap flows assume supply flow demand for the right bank hatchery ladder is included.
** Minimum gate opening 1.6' to achieve velocity barrier on apron, HWEL level with spill crest

ALTERNATIVE 2 – SITE PLAN

0 20 40 80
1" = 40'

US Army Corps of Engineers
Portland District

Revision	Date	Description	By
			XXX

Designed by: F. POSTLEWAITE
Date: 01/16/03
Drawn by: S. NGUYEN
CADD File Name:
Checked by: XXXXXX
Technical Manager: XXXXX
Submitted by: NAME Acting Chief,Struct & Arch.Design

U.S. ARMY ENGINEER DISTRICT
CORPS OF ENGINEERS
SEATTLE, WASHINGTON

MWH

WHITE RIVER
SEATTLE - WASHINGTON
MUD MOUNTAIN DAM
FISH PASSAGE INVESTIGATION
CONCEPTUAL DESIGN REPORT
ALTERNATIVE 2
PLAN

DRAWING STATUS:
DRAFT

DRAWING NO.

PLATE
4

DGNSPEC

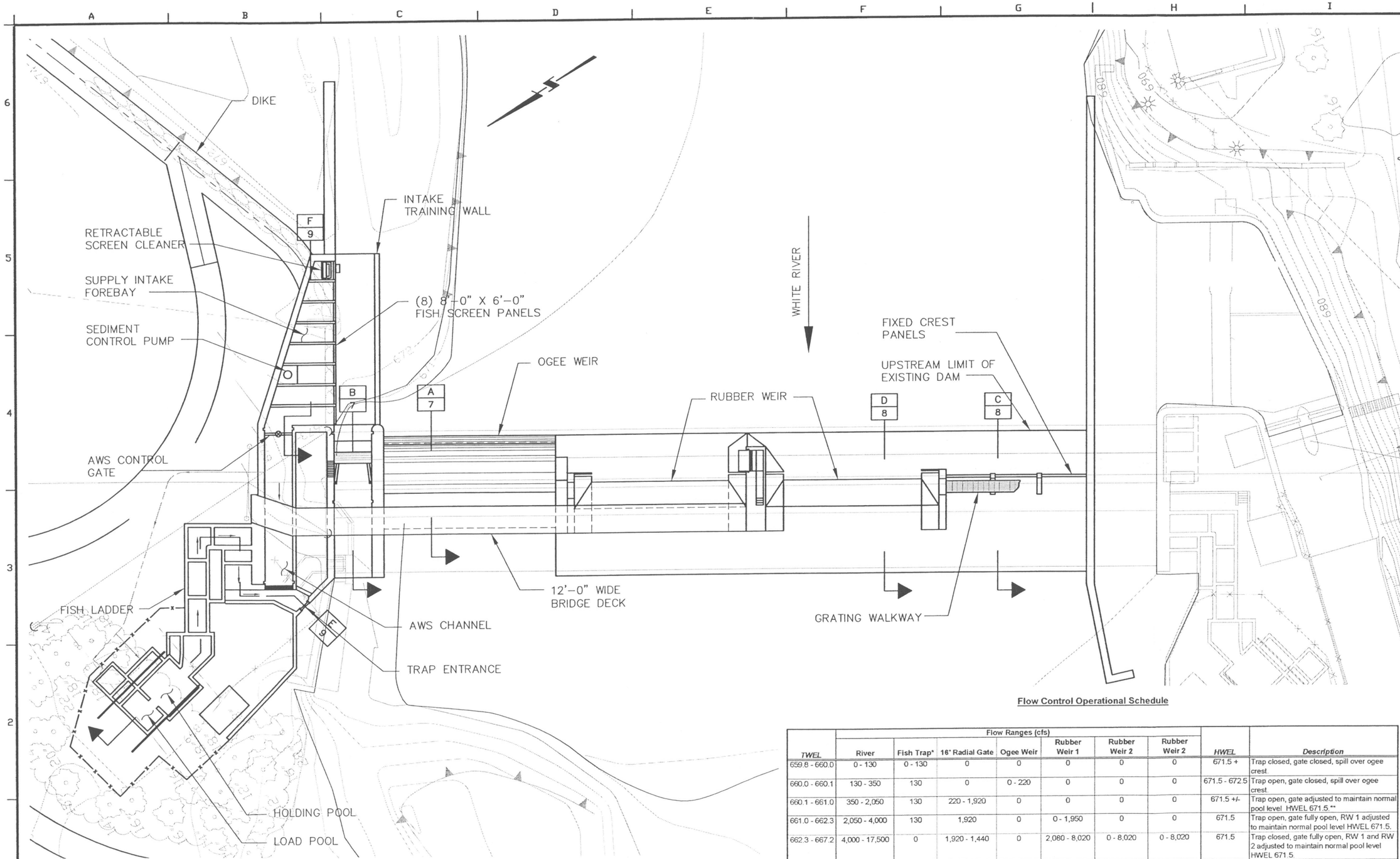

ALTERNATIVE 3 – SITE PLAN

0 20 40 80

1" = 40'

Flow Control Operational Schedule

TWEL	Flow Ranges (cfs) River	Fish Trap*	16' Radial Gate	Ogee Weir	Rubber Weir 1	Rubber Weir 2	Rubber Weir 2	HWEL	Description
659.8 - 660.0	0 - 130	0 - 130	0	0	0	0	0	671.5 +	Trap closed, gate closed, spill over ogee crest.
660.0 - 660.1	130 - 350	130	0	0 - 220	0	0	0	671.5 - 672.5	Trap open, gate closed, spill over ogee crest.
660.1 - 661.0	350 - 2,050	130	220 - 1,920	0	0	0	0	671.5 +/-	Trap open, gate adjusted to maintain normal pool level HWEL 671.5.**
661.0 - 662.3	2,050 - 4,000	130	1,920	0	0 - 1,950	0	0	671.5	Trap open, gate fully open, RW 1 adjusted to maintain normal pool level HWEL 671.5.
662.3 - 667.2	4,000 - 17,500	0	1,920 - 1,440	0	2,080 - 8,020	0 - 8,020	0 - 8,020	671.5	Trap closed, gate fully open, RW 1 and RW 2 adjusted to maintain normal pool level HWEL 671.5.
667.2 - 668.1	17,500 - 20,100	0	1,440 - 1,660	0 - 240	8,020 - 9,170	8,020 - 9,170	8,020 - 9,170	671.5 - 672.5	Trap closed, gate fully open, RW's both down, spill over ogee crest, no spill over fixed-crest panels.
668.1 - 669.6	20,100 - 24,800	0	1,660 - 1,960	240 - 1,010	9,170 - 10,710	9,170 - 10,711	9,170 - 10,711	672.5 - 674.1	Trap closed, gate fully open, RW's both down, spill over ogee crest, spill over fixed-crest panels.

** Minimum gate opening 1.6' to achieve velocity barrier on apron, HWEL level with spill crest

US Army Corps of Engineers
Portland District

Revision	Date	Description	By
			XXX

Designed by: F. POSTLEWAITE
Date: 01/16/03
Drawn by: S. NGUYEN
CADD File Name:
Checked by: XXXXX
Technical Manager: XXX
Submitted by: NAME Acting Chief,Struct.& Arch.Design

U.S. ARMY ENGINEER DISTRICT
CORPS OF ENGINEERS
SEATTLE, WASHINGTON

MWH

WHITE RIVER — SEATTLE – WASHINGTON

MUD MOUNTAIN DAM
FISH PASSAGE INVESTIGATION
CONCEPTUAL DESIGN REPORT

ALTERNATIVE 3
PLAN

DRAWING STATUS:
DRAFT

DRAWING NO.

PLATE
5

DGNSPEC

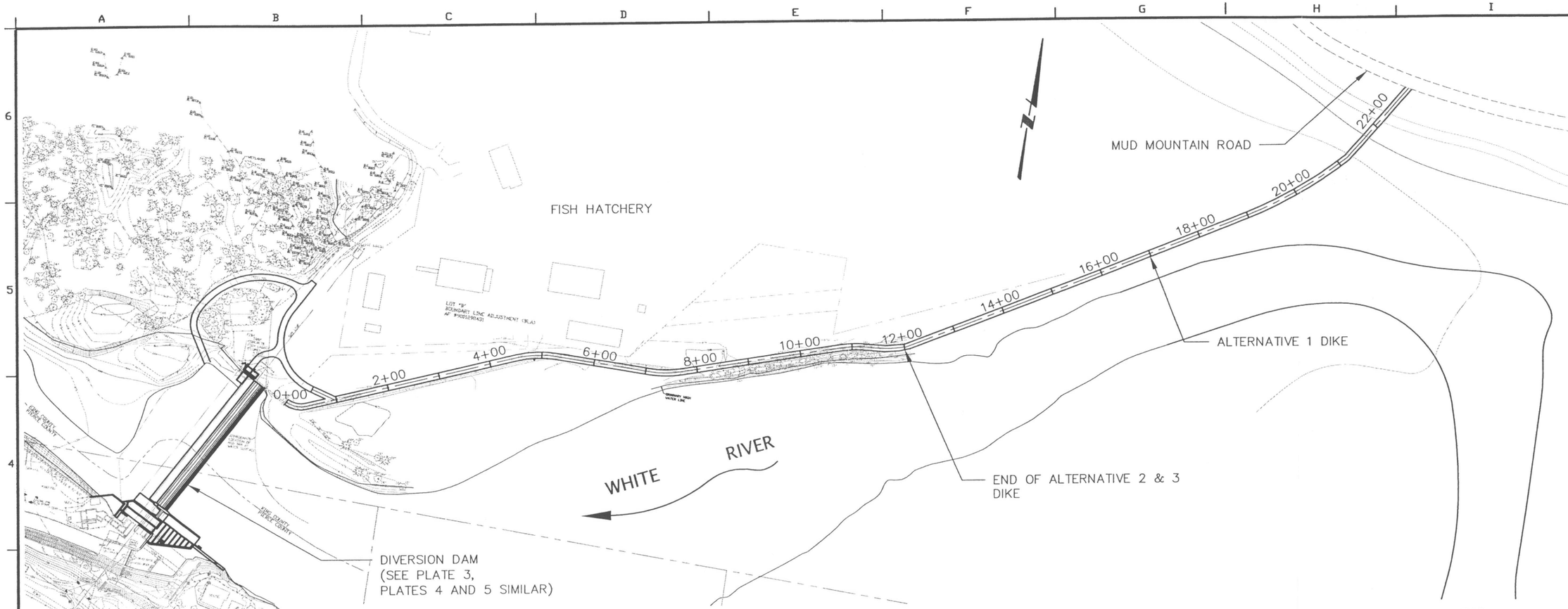

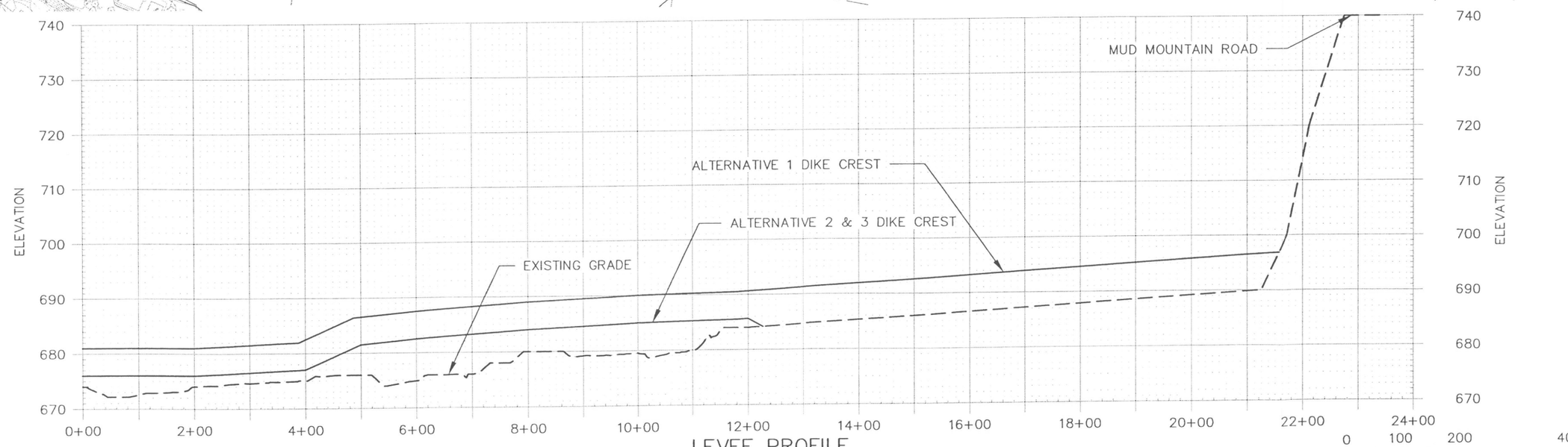

LEVEE PROFILE

HORIZ SCALE: 1"=200' VERT SCALE: 1"=20'

0 100 200 400
1" = 200'

US Army Corps of Engineers
Portland District

Revision	Date	Description	By
			XXX

Designed by: F. POSTLEWAITE
Date: 01/16/03
Drawn by: S. NGUYEN
CADD File Name:
Checked by: XXXXXX
Technical Manager: XXXXX
Submitted by: NAME Acting Chief/Struct.& Arch.Design

U.S. ARMY ENGINEER DISTRICT
CORPS OF ENGINEERS
SEATTLE, WASHINGTON

MWH

WHITE RIVER
SEATTLE - WASHINGTON
MUD MOUNTAIN DAM
FISH PASSAGE INVESTIGATION
CONCEPTUAL DESIGN REPORT

PSE LEVEE
PLAN AND ELEVATION

DRAWING STATUS:
DRAFT

DRAWING NO.

PLATE
6

DGNSPEC

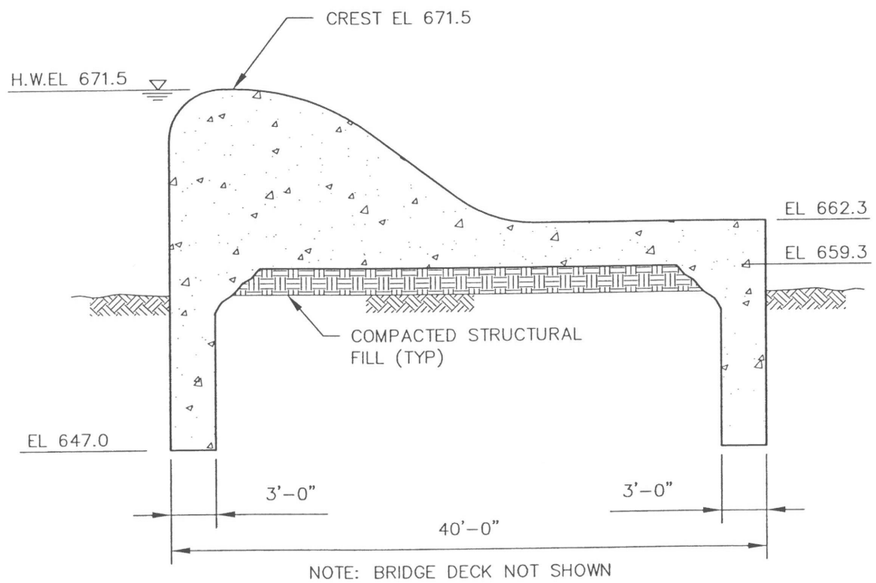

SECTION A
SCALE: 1"=10'
3,4,5

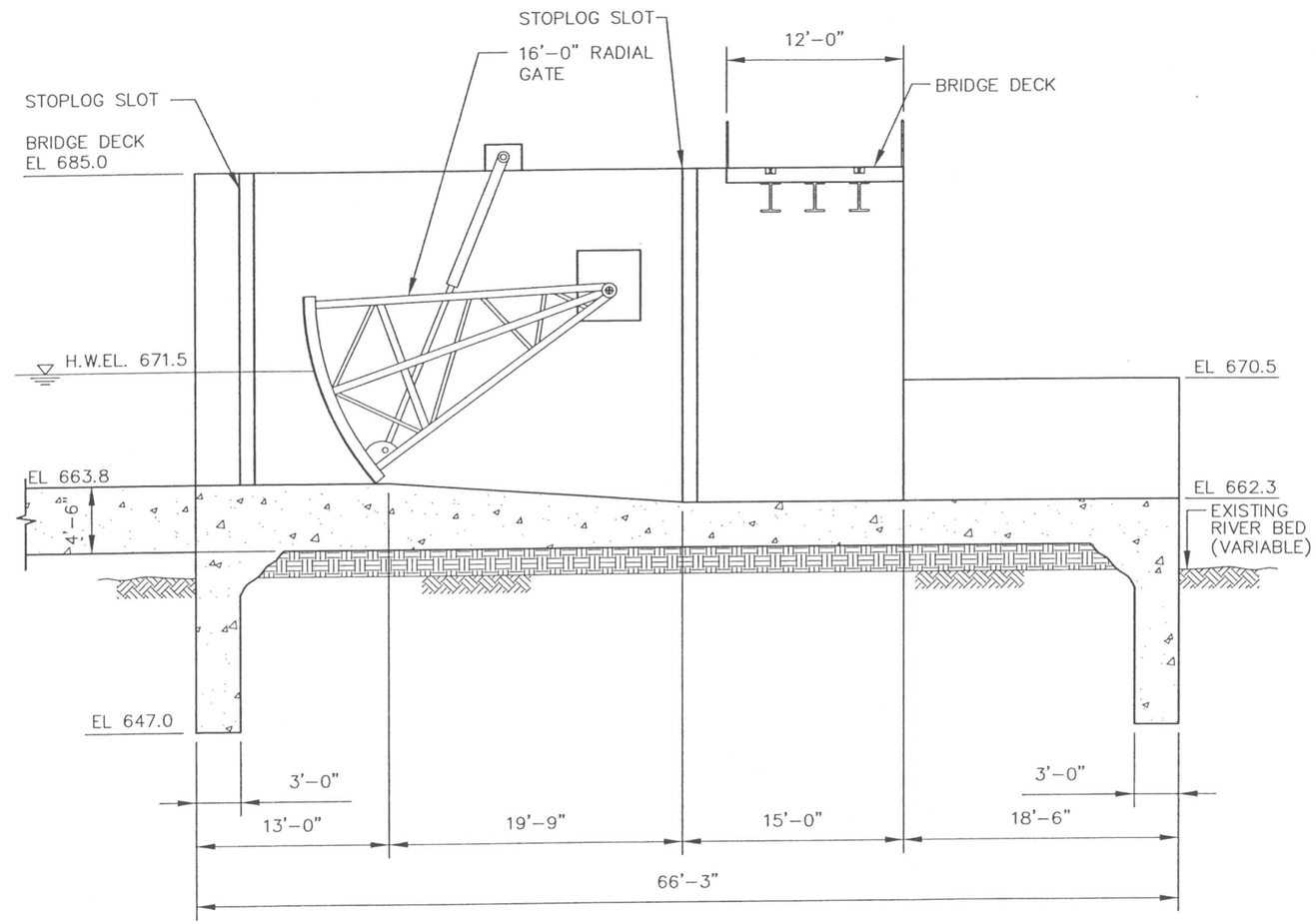

SECTION B
SCALE: 1"=10'
3,4,5

0 5 10 20
1" = 10'

US Army Corps of Engineers
Portland District

Revision	Date	Description	By
			XXX

Designed by: F. POSTLEWAITE
Date: 01/16/03
Drawn by: S. NGUYEN
CADD File Name:
Checked by: XXXXXX
Technical Manager: XXXXX
Submitted by: Acting Chief,Struct.& Arch.Design

U.S. ARMY ENGINEER DISTRICT
CORPS OF ENGINEERS
SEATTLE, WASHINGTON

MWH

WHITE RIVER
SEATTLE - WASHINGTON
MUD MOUNTAIN DAM
FISH PASSAGE INVESTIGATION
CONCEPTUAL DESIGN REPORT
ALTERNATIVES 1, 2 AND 3
SECTIONS I

DRAWING STATUS:
DRAFT

DRAWING NO.

PLATE
7

DGNSPEC

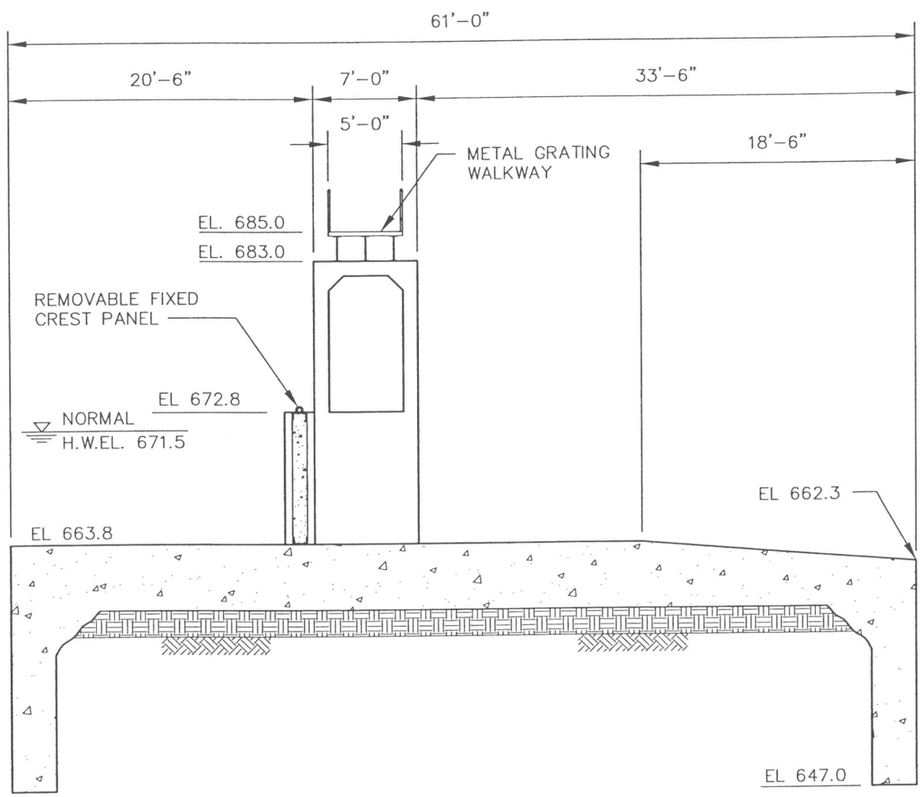

SECTION C
SCALE: 1"=10'
4,5

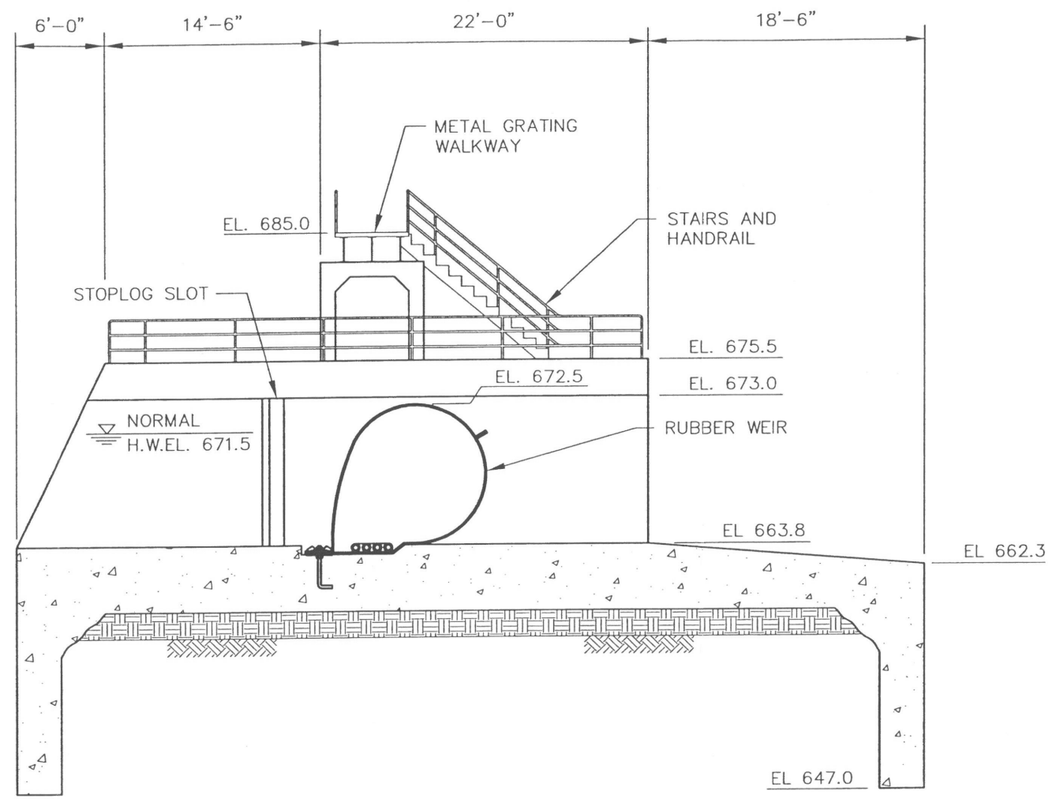

SECTION D
SCALE: 1"=10'
4,5

US Army Corps of Engineers
Portland District

Revision	Date	Description	By
			XXX

Designed by: F. POSTLEWAITE
Date: 01/16/03
Drawn by: S. NGUYEN
CADD File Name:
Checked by: XXXXXX
Technical Manager: XXXXXX
Submitted by: NAME Acting Chief Struct.& Arch.Design

U.S. ARMY ENGINEER DISTRICT
CORPS OF ENGINEERS
SEATTLE, WASHINGTON

MWH

WHITE RIVER
SEATTLE - WASHINGTON
MUD MOUNTAIN DAM
FISH PASSAGE INVESTIGATION
CONCEPTUAL DESIGN REPORT
ALTERNATIVES 1, 2 AND 3
SECTIONS II

DRAWING STATUS:
DRAFT

DRAWING NO.

PLATE
8

DGNSPEC

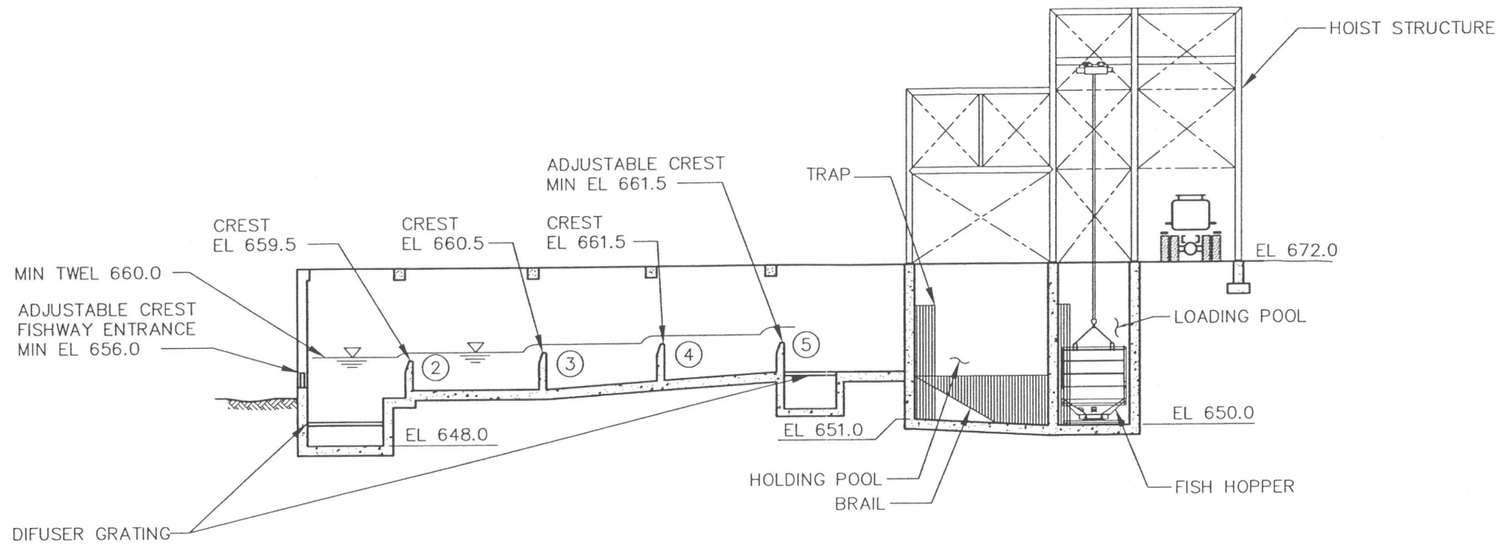

SECTION E
SCALE: 1"=20' 3,4,5

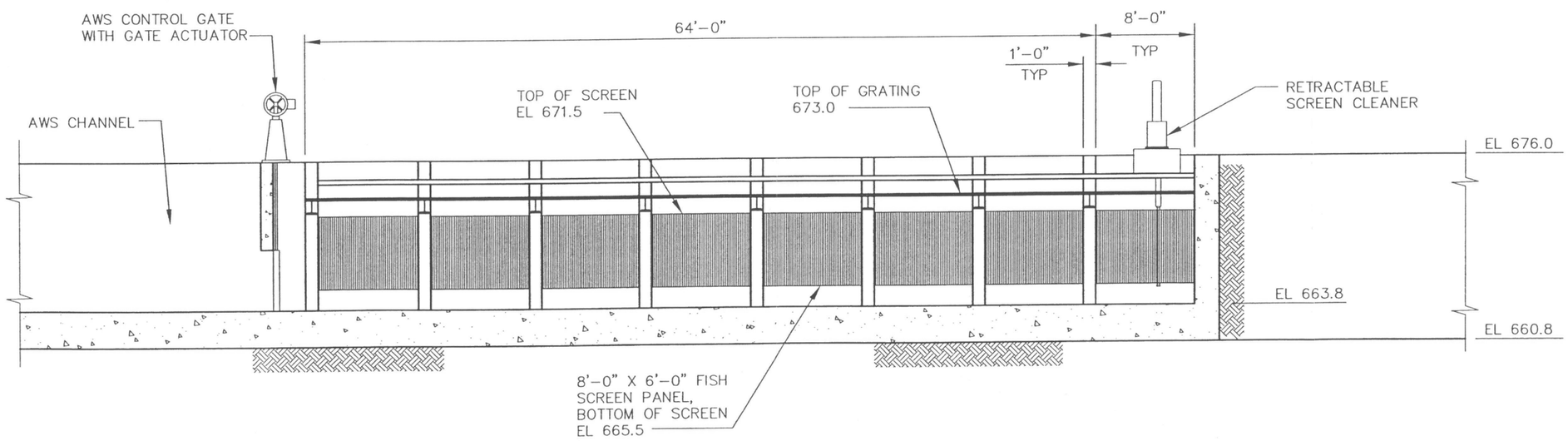

SECTION F
SCALE: 1"=10' 3,4,5

0 5 10 20
1" = 10'

0 10 20 40
1" = 20'

NOTE:

SECTIONS E AND F ARE
REVERSED FOR ALTERNATIVE 3

US Army Corps of Engineers
Portland District

Revision	Date	Description	By

Designed by: F. POSTLEWAITE
Date: 01/16/03
Drawn by: S. NGUYEN
CADD File Name:
Checked by: XXXXX
Technical Manager: XXXXX
Submitted by: NAME
Acting Chief Struct.& Arch.Design

U.S. ARMY ENGINEER DISTRICT
CORPS OF ENGINEERS
SEATTLE, WASHINGTON

MWH

WHITE RIVER
SEATTLE - WASHINGTON
MUD MOUNTAIN DAM
FISH PASSAGE INVESTIGATION
CONCEPTUAL DESIGN REPORT
ALTERNATIVE 1, 2 AND 3
SECTIONS III

DRAWING STATUS:
DRAFT

DRAWING NO.

PLATE
9

DGNSPEC

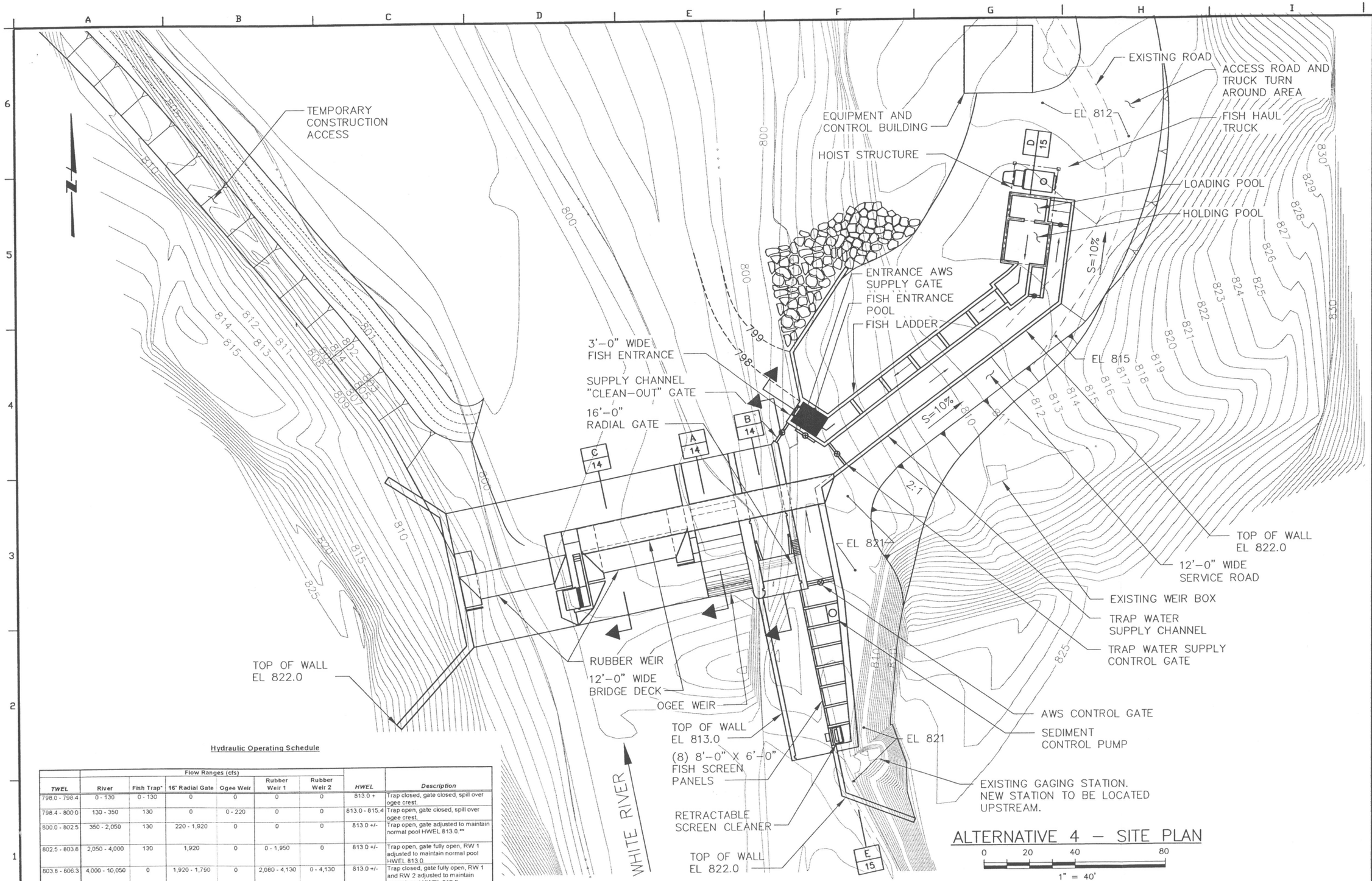

Hydraulic Operating Schedule

TWEL	Flow Ranges (cfs) River	Fish Trap*	16' Radial Gate	Ogee Weir	Rubber Weir 1	Rubber Weir 2	HWEL	Description
798.0 - 798.4	0 - 130	0 - 130	0	0	0	0	813.0 +	Trap closed, gate closed, spill over ogee crest.
798.4 - 800.0	130 - 350	130	0	0 - 220	0	0	813.0 - 815.4	Trap open, gate closed, spill over ogee crest.
800.0 - 802.5	350 - 2,050	130	220 - 1,920	0	0	0	813.0 +/-	Trap open, gate adjusted to maintain normal pool HWEL 813.0.**
802.5 - 803.8	2,050 - 4,000	130	1,920	0	0 - 1,950	0	813.0 +/-	Trap open, gate fully open, RW 1 adjusted to maintain normal pool HWEL 813.0.
803.8 - 806.3	4,000 - 10,050	0	1,920 - 1,790	0	2,080 - 4,130	0 - 4,130	813.0 +/-	Trap closed, gate fully open, RW 1 and RW 2 adjusted to maintain normal pool HWEL 813.0.
806.3 - 810.1	10,050 - 24,800	0	1,790 - 4,100	0 - 1,180	4,130 - 9,760	4,130 - 9,760	813.0 - 819.6	Trap closed, gate fully open, RW's both deflated, spill over ogee crest.

** Minimum gate opening 1.6' to achieve velocity barrier on apron, HWEL level with spill crest

US Army Corps of Engineers
Portland District

Revision	Date	Description	By
			XXX

Designed by: F. POSTLEWAITE
Date: 01/16/03
Drawn by: S. NGUYEN
CADD File Name:
Checked by: XXXXXX
Technical Manager: XXXXX
Submitted by: NAME Acting Chief,Struct.& Arch.Design

U.S. ARMY ENGINEER DISTRICT
CORPS OF ENGINEERS
SEATTLE, WASHINGTON

MWH

WHITE RIVER
SEATTLE - WASHINGTON
MUD MOUNTAIN DAM
FISH PASSAGE INVESTIGATION
CONCEPTUAL DESIGN REPORT
ALTERNATIVE 4 PLAN

DRAWING STATUS: DRAFT

DRAWING NO.

PLATE 10

DGNSPEC

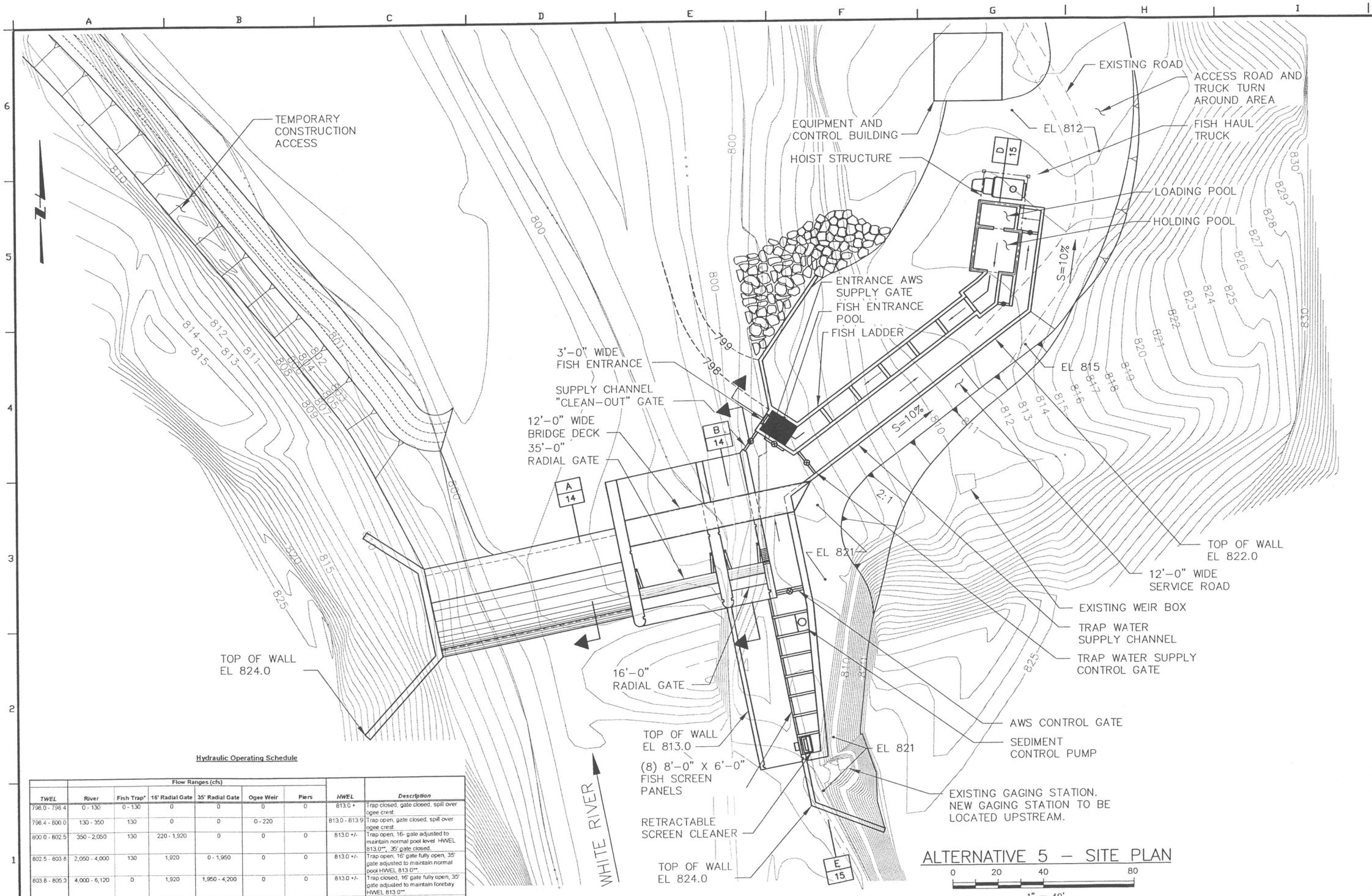

ALTERNATIVE 5 – SITE PLAN

0 20 40 80

1" = 40'

Hydraulic Operating Schedule

	Flow Ranges (cfs)							
TWEL	River	Fish Trap*	16' Radial Gate	35' Radial Gate	Ogee Weir	Piers	*HWEL*	*Description*
798.0 - 798.4	0 - 130	0 - 130	0	0	0	0	813.0 +	Trap closed, gate closed, spill over ogee crest
798.4 - 800.0	130 - 350	130	0	0	0 - 220		813.0 - 813.9	Trap open, gate closed, spill over ogee crest.
800.0 - 802.5	350 - 2,050	130	220 - 1,920	0	0	0	813.0 +/-	Trap open, 16- gate adjusted to maintain normal pool level HWEL 813.0**, 35' gate closed.
802.5 - 803.8	2,050 - 4,000	130	1,920	0 - 1,950	0	0	813.0 +/-	Trap open, 16' gate fully open, 35' gate adjusted to maintain normal pool HWEL 813.0**.
803.8 - 805.3	4,000 - 6,120	0	1,920	1,950 - 4,200	0	0	813.0 +/-	Trap closed, 16' gate fully open, 35' gate adjusted to maintain forebay HWEL 813.0**
805.3 - 810.1	6,120 - 24800	0	1,920 - 5200	4,200 - 11400	0 - 7,840	0 - 360	813.0 - 822.1	Trap closed, both gates fully open, spill over ogee crest

** Minimum gate opening 1.6' to achieve velocity barrier on apron, HWEL level with spill crest

US Army Corps of Engineers
Portland District

Revision	Date	Description	By
			XXX

Designed by: F. POSTLEWAITE
Drawn by: S. NGUYEN
Checked by: XXXXXX
Submitted by: NAME Acting Chief,Struct.& Arch.Design
Date: 01/16/03
CADD File Name:
Technical Manager: XXXXX

U.S. ARMY ENGINEER DISTRICT
CORPS OF ENGINEERS
SEATTLE, WASHINGTON

MWH

WHITE RIVER
SEATTLE - WASHINGTON
MUD MOUNTAIN DAM
FISH PASSAGE INVESTIGATION
CONCEPTUAL DESIGN REPORT
ALTERNATIVE 5
PLAN

DRAWING STATUS:
DRAFT

DRAWING NO.

PLATE
11

DGNSPEC

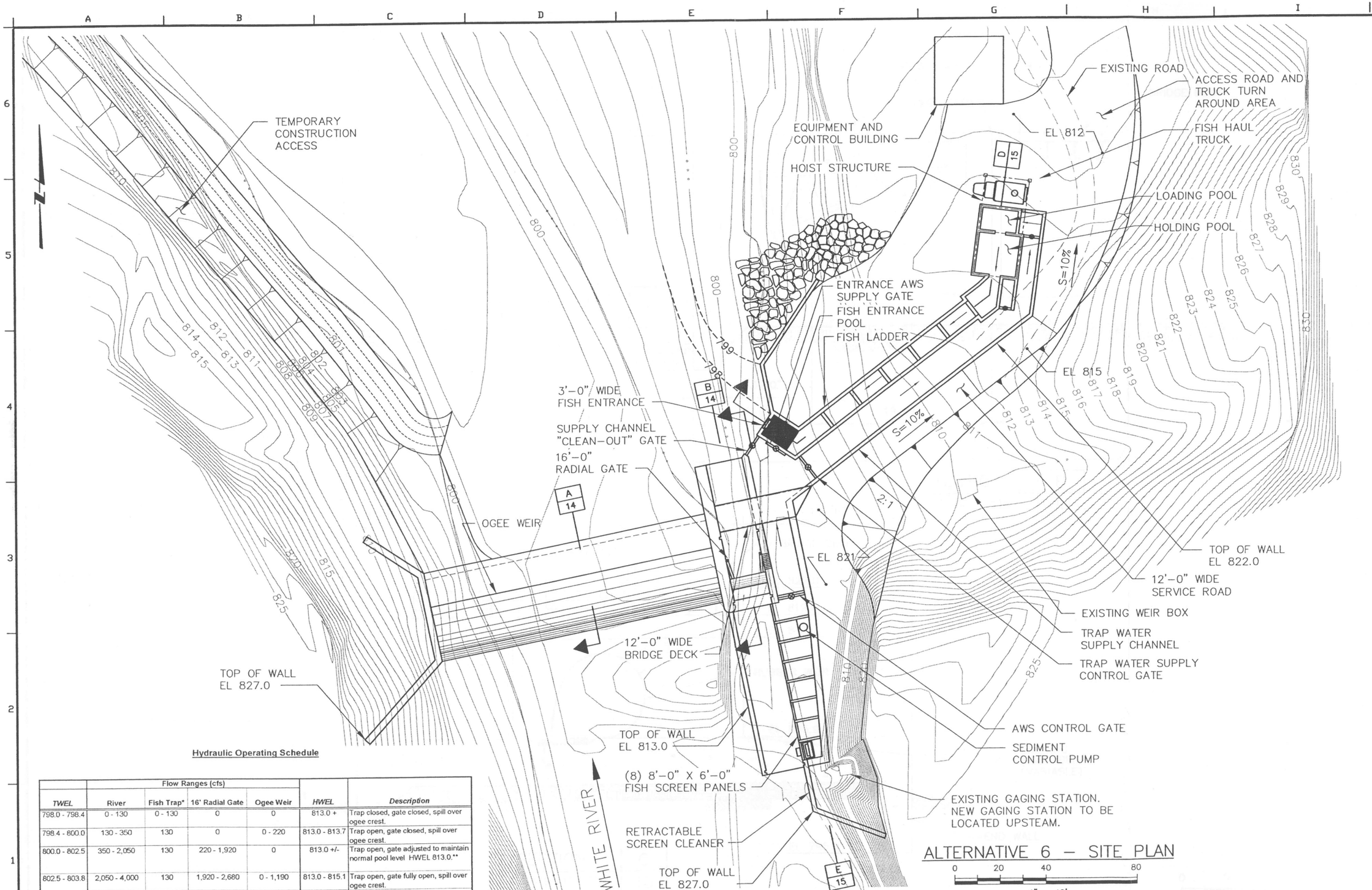

Hydraulic Operating Schedule

	Flow Ranges (cfs)					
TWEL	River	Fish Trap*	16' Radial Gate	Ogee Weir	*HWEL*	*Description*
798.0 - 798.4	0 - 130	0 - 130	0	0	813.0 +	Trap closed, gate closed, spill over ogee crest.
798.4 - 800.0	130 - 350	130	0	0 - 220	813.0 - 813.7	Trap open, gate closed, spill over ogee crest.
800.0 - 802.5	350 - 2,050	130	220 - 1,920	0	813.0 +/-	Trap open, gate adjusted to maintain normal pool level HWEL 813.0.**
802.5 - 803.8	2,050 - 4,000	130	1,920 - 2,680	0 - 1,190	813.0 - 815.1	Trap open, gate fully open, spill over ogee crest.
803.8 - 810.1	4,000 - 24,800	0	2,750 - 6,860	1,250 - 17,580	815.1 - 825.1	Trap closed, gate fully open, spill over ogee crest.

** Minimum gate opening 1.6' to achieve velocity barrier on apron, HWEL level with spill crest

US Army Corps of Engineers
Portland District

Revision	Date	Description	By
			XXX

Designed by: F. POSTLEWAITE
Date: 01/16/03
Drawn by: S. NGUYEN
CADD File Name:
Checked by: XXXXXX
Technical Manager: XXXXX
Submitted by: NAME Acting Chief,Struct.& Arch.Design

U.S. ARMY ENGINEER DISTRICT
CORPS OF ENGINEERS
SEATTLE, WASHINGTON

MWH

WHITE RIVER
SEATTLE – WASHINGTON
MUD MOUNTAIN DAM
FISH PASSAGE INVESTIGATION
CONCEPTUAL DESIGN REPORT
ALTERNATIVE 6
PLAN

DRAWING STATUS:
DRAFT

DRAWING NO.

PLATE
12

DGNSPEC

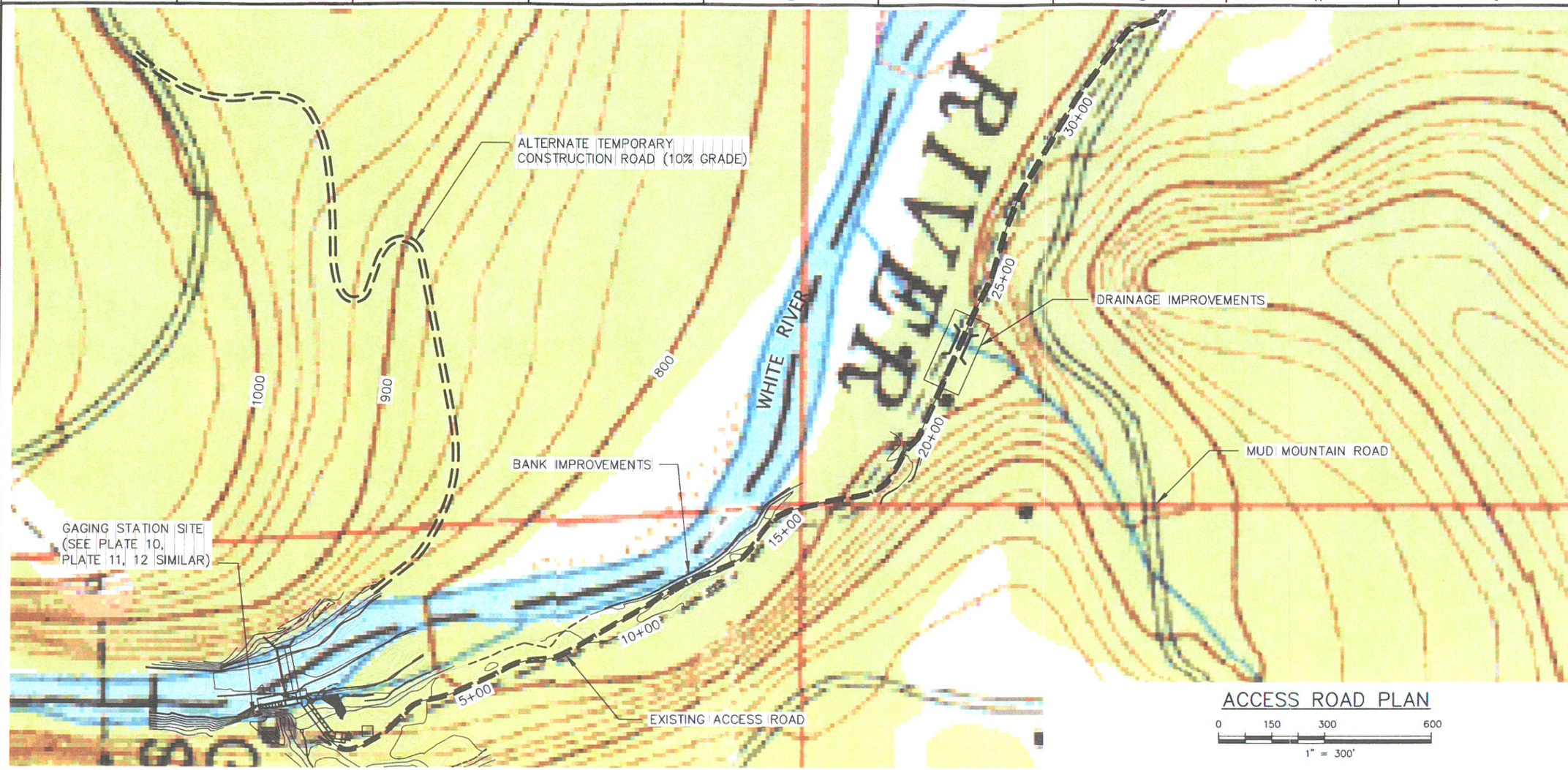

ACCESS ROAD PLAN

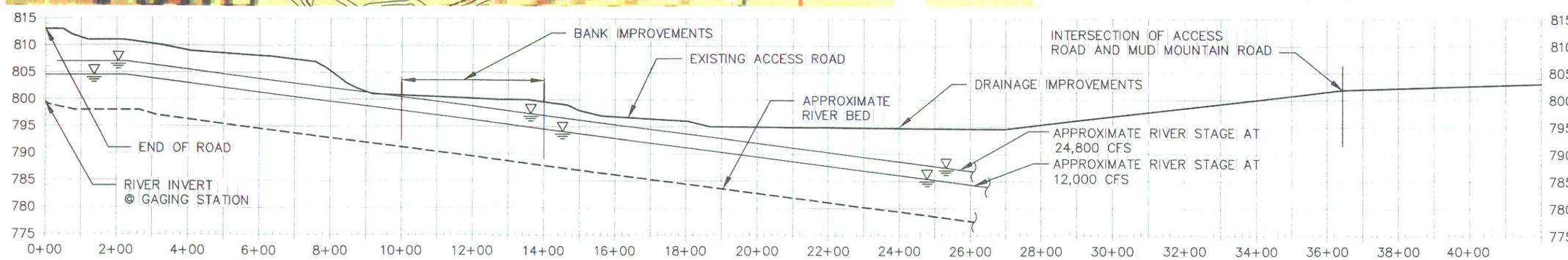

ACCESS ROAD PROFILE

HORIZ SCALE: 1"=300'
VERT SCALE: 1"=20'

US Army Corps of Engineers
Portland District

Revision	Date	Description	By
			XXX

Designed by: F. POSTLEWAITE
Date: 01/16/03
Drawn by: S. NGUYEN
CADD File Name:
Checked by: XXXXXX
Technical Manager: XXXXX
Submitted by: NAME Acting Chief,Struct.& Arch.Design

U.S. ARMY ENGINEER DISTRICT
CORPS OF ENGINEERS
SEATTLE, WASHINGTON

MWH

WHITE RIVER
SEATTLE - WASHINGTON
MUD MOUNTAIN DAM
FISH PASSAGE INVESTIGATION
CONCEPTUAL DESIGN REPORT

GAGING STATION ACCESS ROAD PLAN AND PROFILE

DRAWING STATUS:
DRAFT

DRAWING NO.

PLATE
13

DGNSPEC

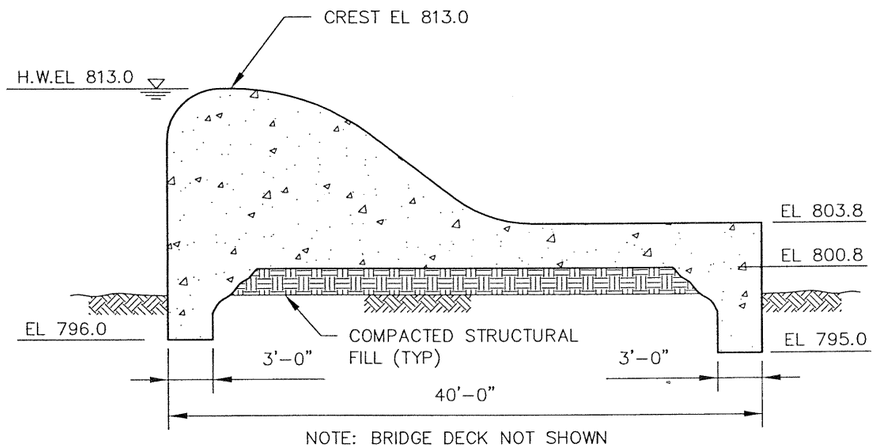

NOTE: BRIDGE DECK NOT SHOWN

SECTION A
SCALE: 1"=10'
10,11,12

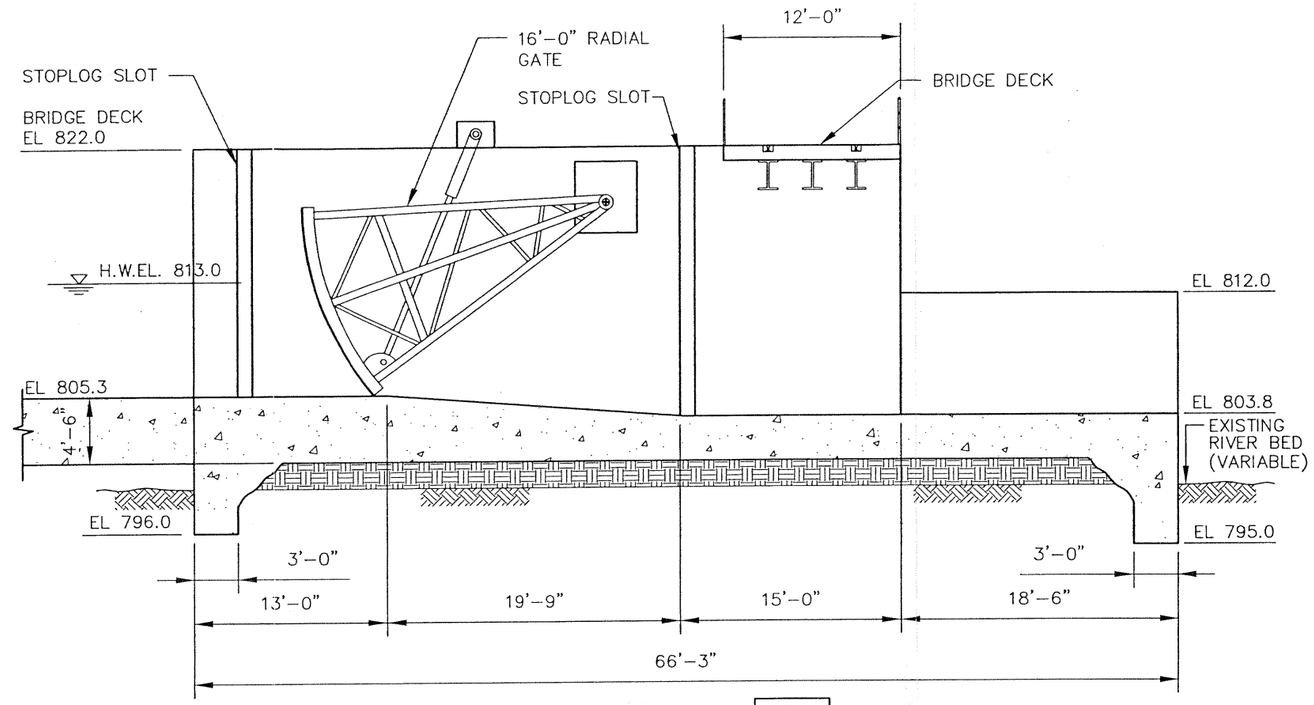

SECTION B
SCALE: 1"=10'
10,11,12

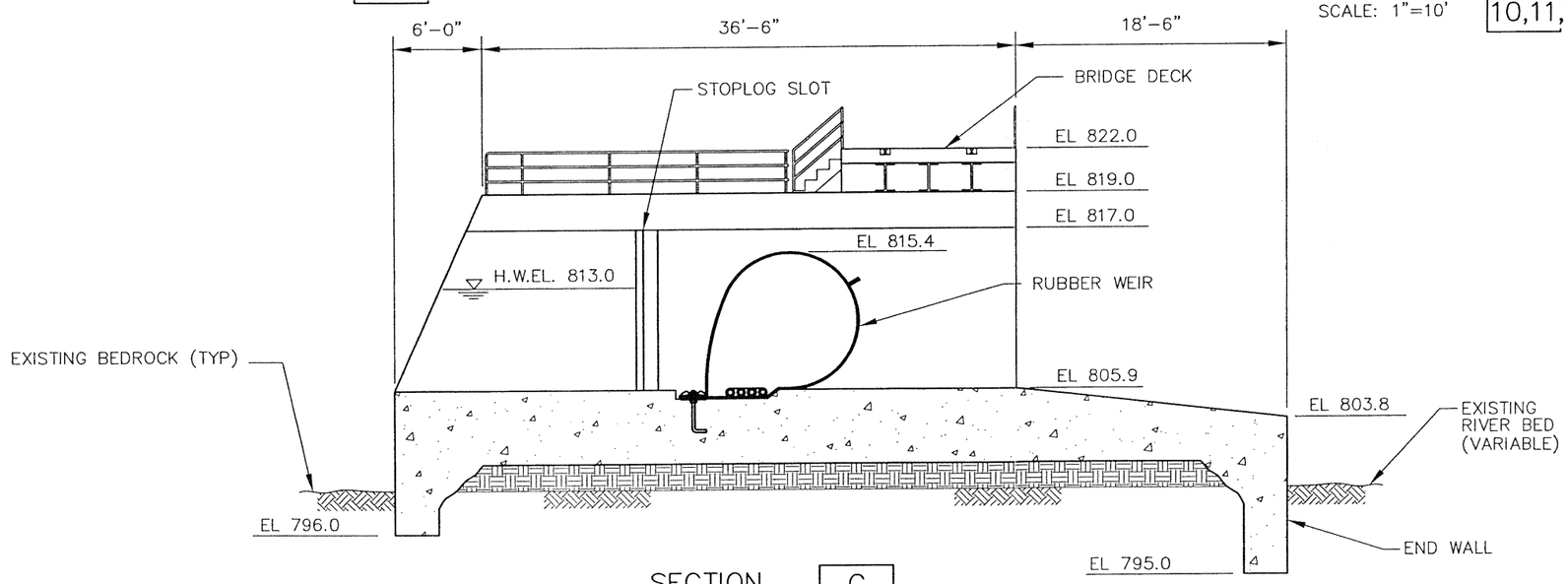

SECTION C
SCALE: 1"=10'
10

0 5 10 20
1" = 10'

US Army Corps of Engineers
Portland District

Revision	Date	Description	By
			XXX

Designed by: F. POSTLEWAITE
Date: 01/16/03
Drawn by: S. NGUYEN
CADD File Name:
Checked by: XXXXXX
Technical Manager: XXXXX
Submitted by: NAME
Acting Chief,Struct.& Arch.Design

U.S. ARMY ENGINEER DISTRICT
CORPS OF ENGINEERS
SEATTLE, WASHINGTON

MWH

WHITE RIVER
SEATTLE - WASHINGTON
MUD MOUNTAIN DAM
FISH PASSAGE INVESTIGATION
CONCEPTUAL DESIGN REPORT
ALTERNATIVES 4, 5 AND 6
SECTIONS I

DRAWING STATUS:
DRAFT

DRAWING NO.

PLATE
14

DGNSPEC

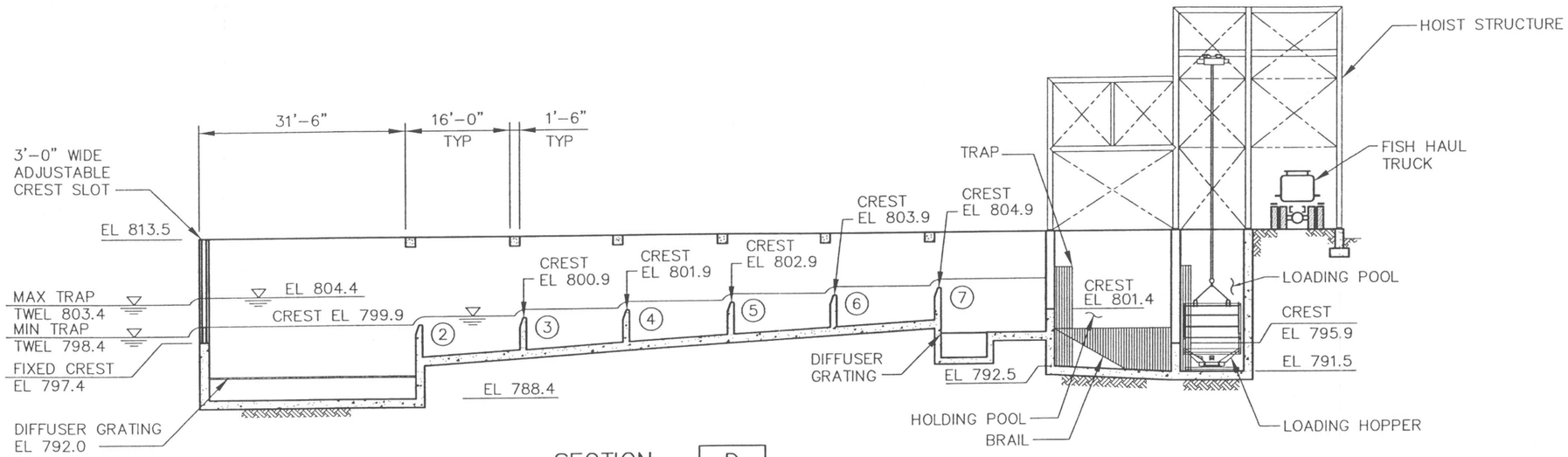

SECTION D
SCALE: 1"=20'
10,11,12

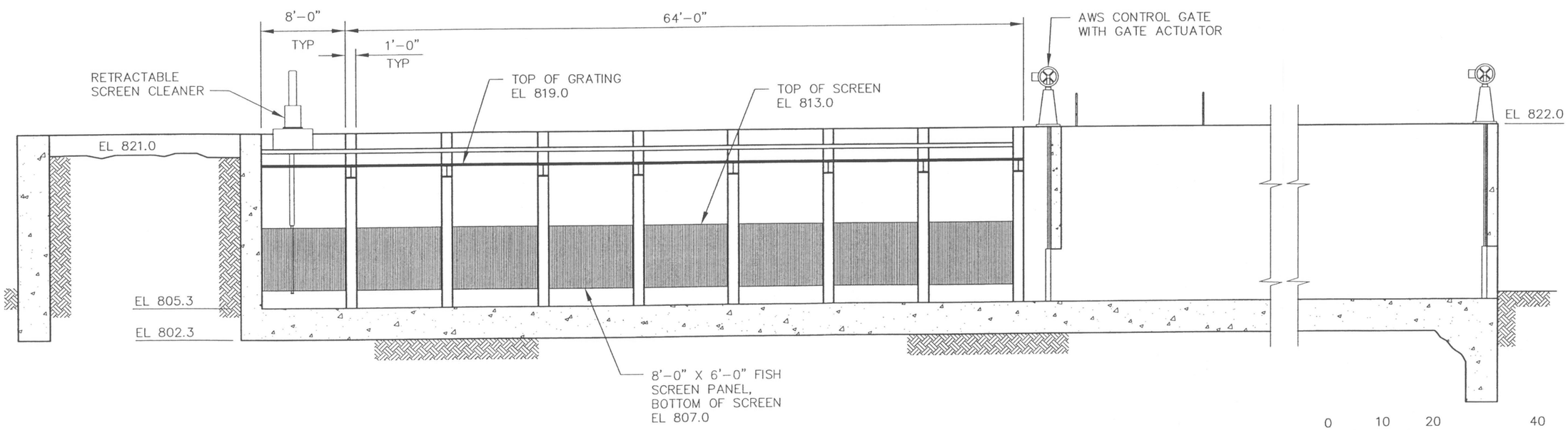

SECTION E
SCALE: 1"=10'
10,11,12

0 10 20 40
1" = 20'

0 5 10 20
1" = 10'

US Army Corps of Engineers
Portland District

Revision	Date	Description	By
			XXX

Designed by: F. POSTLEWAITE
Drawn by: S. NGUYEN
Checked by: XXXXXX
Date: 01/16/03
CADD File Name:
Technical Manager: XXXXX
Submitted by: NAME
Acting Chief,Struct.& Arch.Design

U.S. ARMY ENGINEER DISTRICT
CORPS OF ENGINEERS
SEATTLE, WASHINGTON

MWH

WHITE RIVER — SEATTLE – WASHINGTON

MUD MOUNTAIN DAM
FISH PASSAGE INVESTIGATION
CONCEPTUAL DESIGN REPORT

ALTERNATIVE 4, 5 AND 6 SECTIONS II

DRAWING STATUS: DRAFT

DRAWING NO.

PLATE 15

DGNSPEC

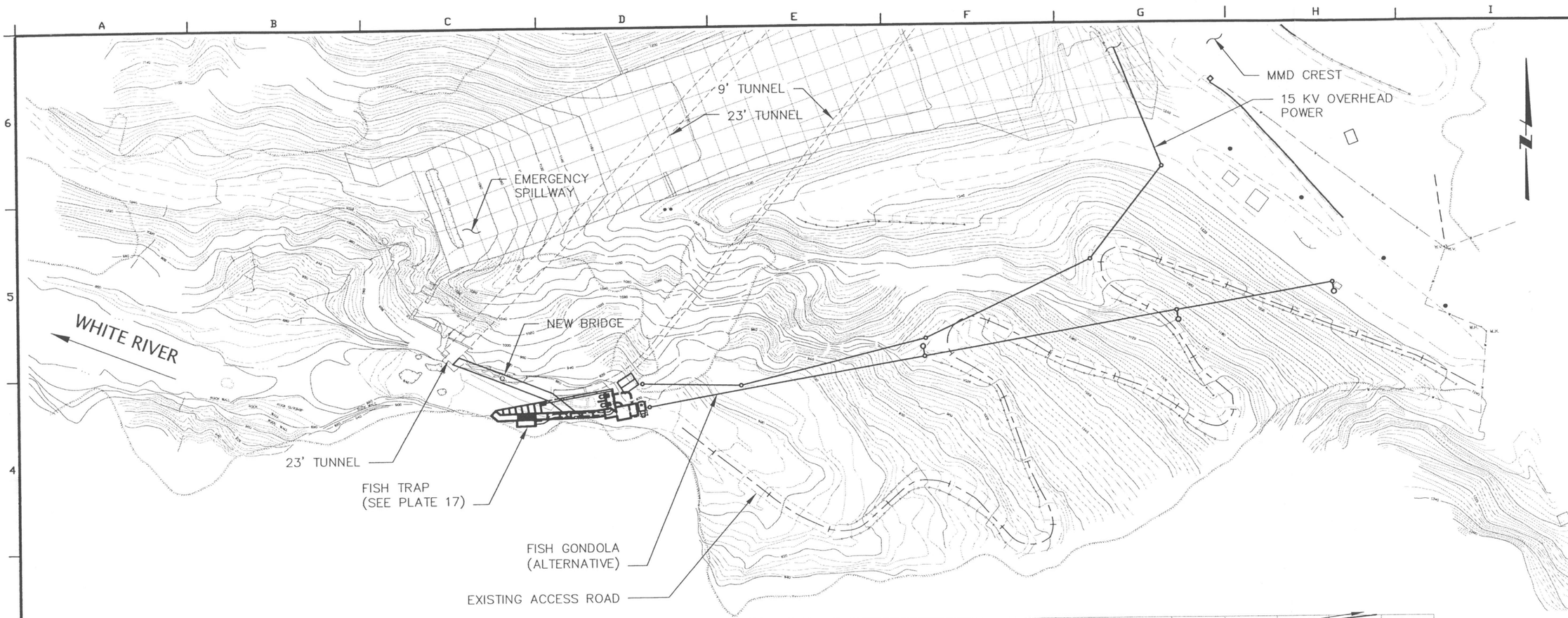

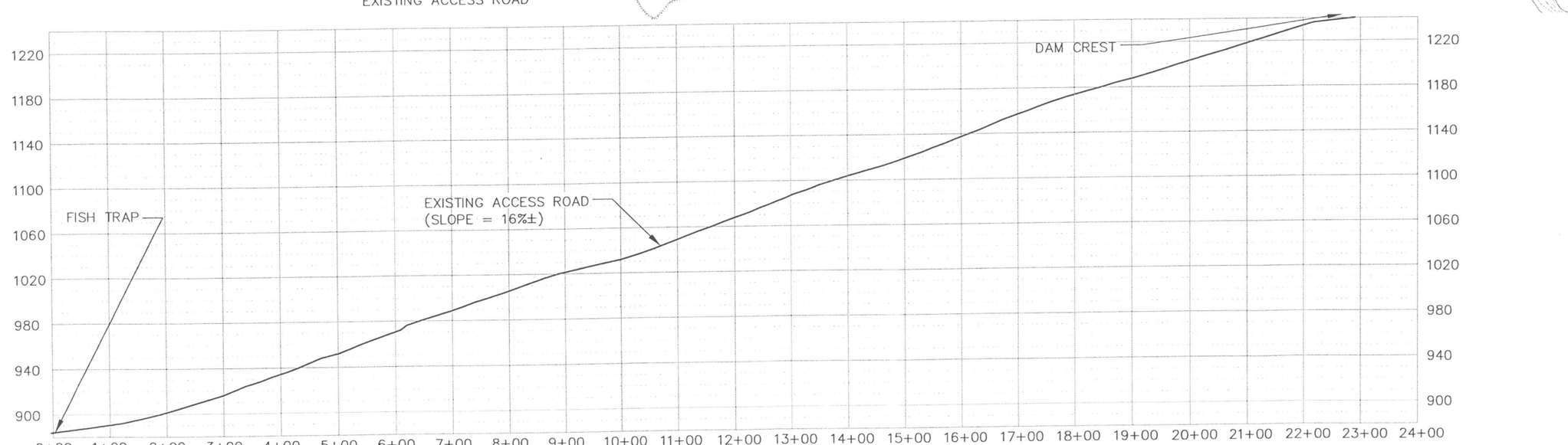

EXISTING ACCESS ROAD PROFILE

HORZ SCALE: 1" = 200'
VERT SCALE: 1" = 400'

0 100 200 400
1" = 200'

US Army Corps of Engineers
Portland District

Revision	Date	Description	By
			XXX

Designed by: F. POSTLEWAITE
Date: 01/16/03
Drawn by: S. NGUYEN
CADD File Name:
Checked by: XXXXXX
Technical Manager: XXXXX
Submitted by: NAME
Acting Chief,Struct.& Arch.Design

U.S. ARMY ENGINEER DISTRICT
CORPS OF ENGINEERS
SEATTLE, WASHINGTON

MWH

WHITE RIVER
SEATTLE - WASHINGTON
MUD MOUNTAIN DAM
FISH PASSAGE INVESTIGATION
CONCEPTUAL DESIGN REPORT

VICINITY PLAN OF ALTERNATIVE 7

DRAWING STATUS:
DRAFT

DRAWING NO.

PLATE
16

DGNSPEC

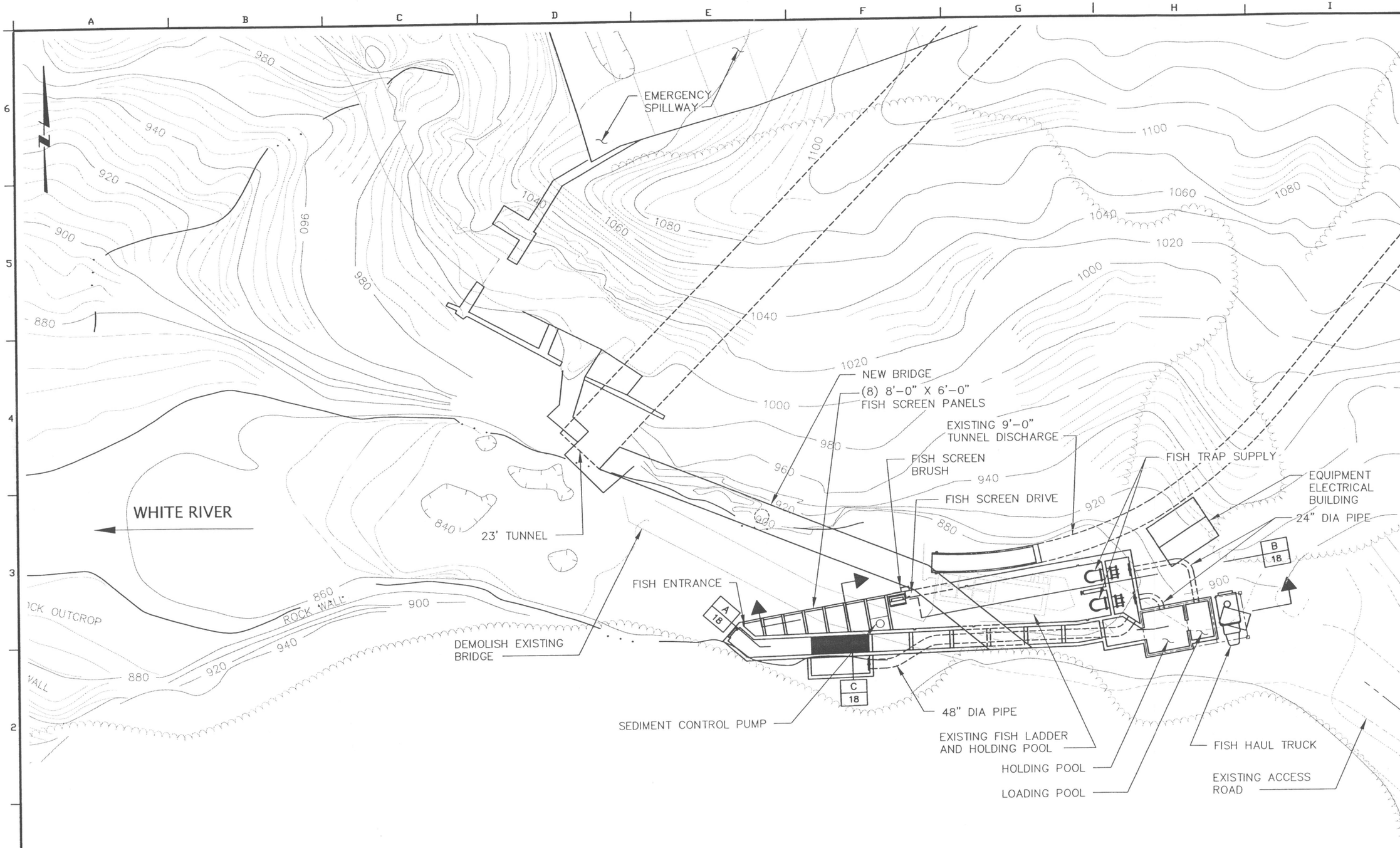

ALTERNATIVE 7 – SITE PLAN

US Army Corps of Engineers
Portland District

Revision	Date	Description	By

Designed by: F. POSTLEWAITE
Drawn by: S. NGUYEN
Checked by: XXXXXX
Submitted by: XXXXXX
Acting Chief, Struct. & Arch. Design

Date: 01/16/03
CADD File Name:
Technical Manager: XXXXX

U.S. ARMY ENGINEER DISTRICT
CORPS OF ENGINEERS
SEATTLE, WASHINGTON

MWH

WHITE RIVER
SEATTLE – WASHINGTON
MUD MOUNTAIN DAM
FISH PASSAGE INVESTIGATION
CONCEPTUAL DESIGN REPORT
ALTERNATIVE 7
PLAN

DRAWING STATUS:
DRAFT

DRAWING NO.

PLATE
17

DGNSPEC

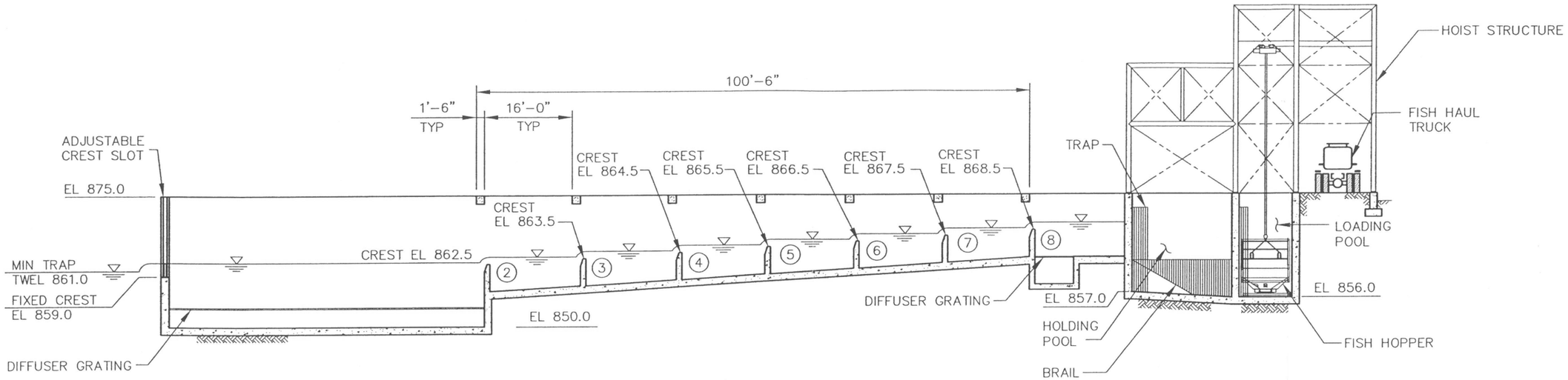

SECTION A
SCALE: 1"=20'
17

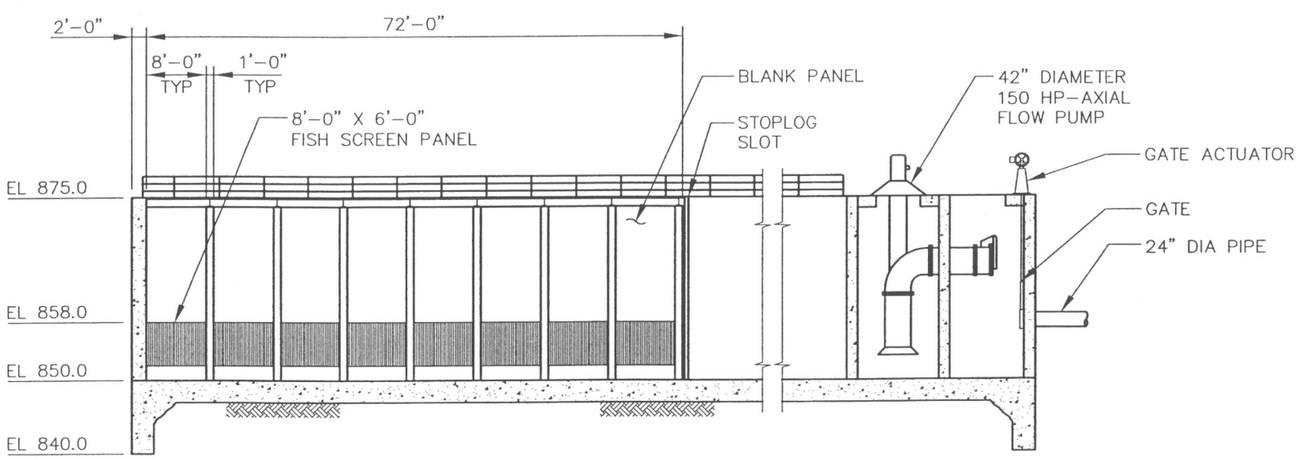

NOTE: FISH SCREEN AND FISH DRIVE NOT SHOWN

SECTION B
SCALE: 1"=20'
17

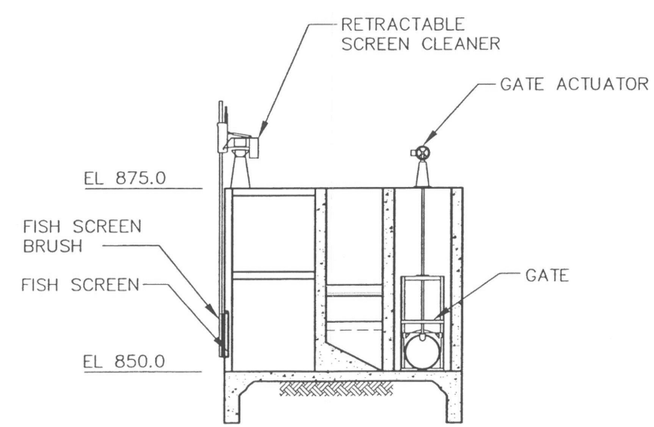

SECTION C
SCALE: 1"=20'
17

0 10 20 40
1" = 20'

US Army Corps of Engineers
Portland District

Revision	Date	Description	By
			XXX

Designed by: F. POSTLEWAITE
Drawn by: S. NGUYEN
Checked by: XXXXXX
Submitted by: NAME Acting Chief Struct.& Arch.Design
Date: 01/16/03
CADD File Name:
Technical Manager: XXXXX

U.S. ARMY ENGINEER DISTRICT
CORPS OF ENGINEERS
SEATTLE, WASHINGTON

MWH

WHITE RIVER
SEATTLE - WASHINGTON
MUD MOUNTAIN DAM
FISH PASSAGE INVESTIGATION
CONCEPTUAL DESIGN REPORT
ALTERNATIVE 7
SECTIONS

DRAWING STATUS:
DRAFT

DRAWING NO.

PLATE
18

DGNSPEC