CITY OF KENT

JIM WHITE – MAYOR

MEMBERS OF CITY COUNCIL

TIM CLARK RON HARMON DEBBIE RAPLEE JULIE PETERSON

BRUCE WHITE DEBORAH RANNIGER LES THOMAS

LARRY R. BLANCHARD – DIRECTOR OF PUBLIC WORKS

GARY GILL – CITY ENGINEER

BRENDA JACOBER – CITY CLERK

TOM BRUBAKER – CITY ATTORNEY

KENT WASHINGTON

MONTGOMERY WATER GROUP, INC.
Kirkland, WA Gig Harbor, WA
6625 Wagner Way Suite 204
Gig Harbor, WA 98335
Phone: (253) 858-5552
FAX: (253) 858-5553
www.mwater.com

The Watershed Company
1410 Market Street
Kirkland, WA 98033
425.822.5242 Fax: 425.827.8136
www.watershedco.com

GEO ENGINEERS

MGS Engineering Consultants, Inc.

springwood

COW CREEK REALIGNMENT, LAKE MERIDIAN OUTLET, AND WETLAND RESTORATION IMPROVEMENTS

SHEET INDEX

C01 COVER SHEET
C02 LEGENDS AND ABBREVIATIONS
C03 GENERAL NOTES AND PROJECT INFORMATION
C04 SURVEY CONTROL
C05 SURVEY CONTROL
C06 SURVEY CONTROL
C07 SITE ACCESS AND STAGING AREA PLAN
C08 SITE PLAN AND SHEET LAYOUT
C09 PLAN AND PROFILE – LAKE OUTLET AND MODIFIED EXISTING CHANNEL ZONES
C10 PLAN AND PROFILE – EXISTING CHANNEL ZONE AND TRANSITION ZONE 2
C11 PLAN AND PROFILE – TRANSITION ZONE 2 AND UPPER BENCH ZONE
C12 PLAN AND PROFILE – UPPER BENCH ZONE TO TRANSITION ZONE 1
C13 PLAN AND PROFILE – TRANSITION ZONE 1 AND STEEP SLOPE ZONE
C14 PLAN AND PROFILE – LOWER BENCH ZONE
C15 LAKE OUTLET ZONE PLAN
C16 MODIFIED EXISTING CHANNEL ZONE PLAN
C17 CHANNEL SECTIONS
C18 CHANNEL SECTIONS
C19 CHANNEL SECTIONS
C20 CHANNEL SECTIONS
C21 CHANNEL SECTIONS
C22 CHANNEL SECTIONS
C23 CHANNEL SECTIONS
C24 PLAN AND PROFILE – WETLAND C
C25 PLAN AND PROFILE – WETLAND D
C26 PLAN AND PROFILE – WETLANDS E AND F
C27 WETLAND SECTIONS
C28 TRAIL AND UTILITY ACCESS PLAN
C29 3-SIDED BOX PLAN
C30 LAKE OUTLET DETAILS
C31 CHANNEL DETAILS
C32 LWD DETAILS
C33 WETLAND DETAILS
C34 CONCEPTUAL TESC AND CARE/DIVERSION OF WATER PLAN NORTH
C35 CONCEPTUAL TESC AND CARE/DIVERSION OF WATER PLAN SOUTH
C36 TESC DETAILS
C37 TESC DETAILS
S01 FOOTING LAYOUT
S02 LABYRINTH PLAN AND SECTIONS
S03 LABYRINTH WEIR DETAILS 1
S04 LABYRINTH WEIR DETAILS 2
S05 RETAINING WALL DETAILS 1
S06 GRATING DETAILS 1
S07 GRATING DETAILS 2
S08 PEDESTRIAN HANDRAIL DETAILS
L01 LANDSCAPE NOTES
L02 LANDSCAPE PLANS – LAKE OUTLET ZONE
L03 LANDSCAPE PLANS – CHANNEL ZONES
L04 LANDSCAPE PLANS – CHANNEL ZONES
L05 LANDSCAPE PLANS – WETLANDS
L06 LANDSCAPE DETAILS

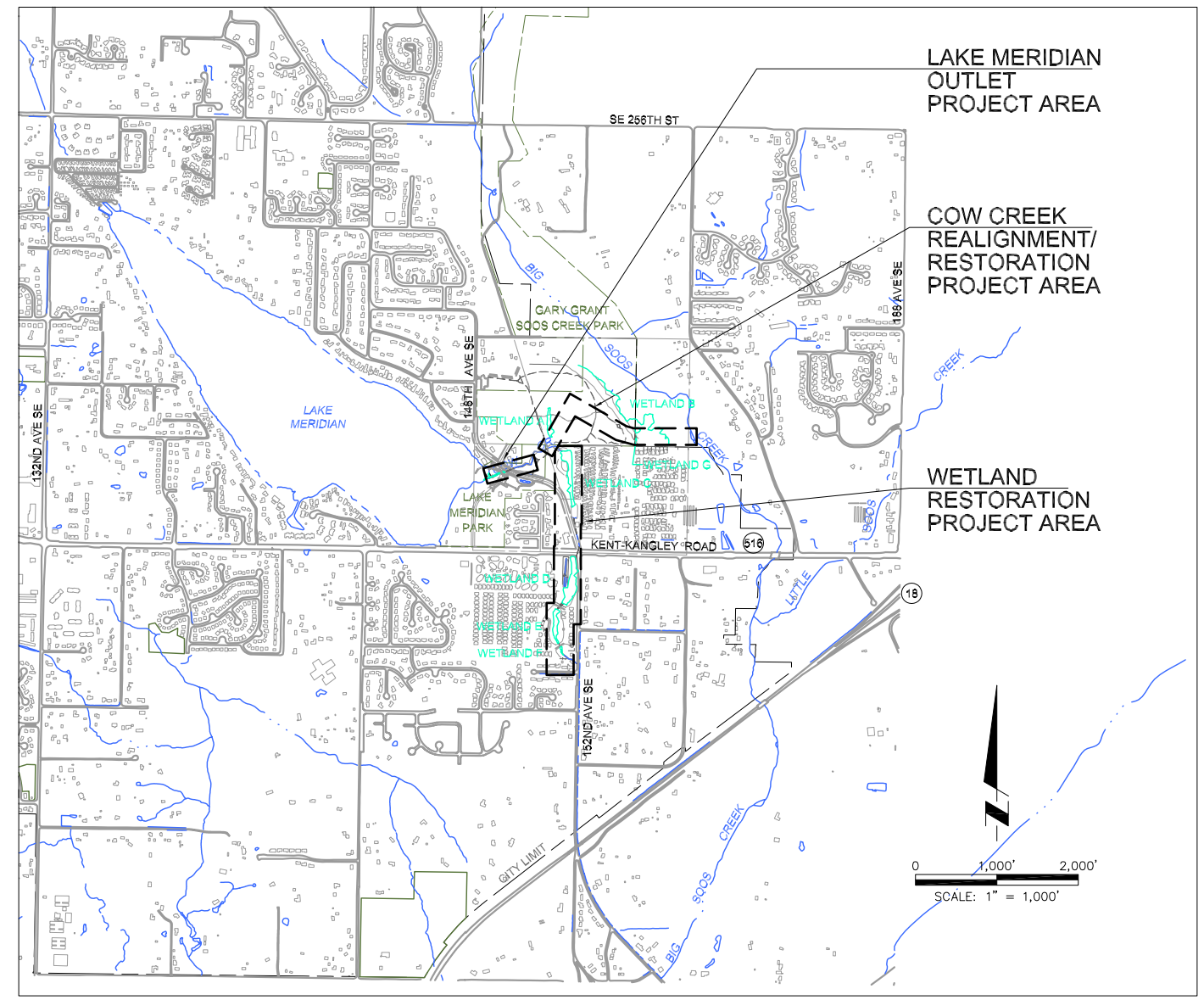

VICINITY MAP

90% Design Review Submittal - Not for Construction

NO.	REVISION	BY	DATE
–	–	–	–

DESIGNED: DJC CHECKED: GAB KENT PROJECT NO. –
DRAWN: DJC PROJ MANGR: GAB CONST. MGMT. REVIEW –
APPROVED: _____ CITY ENGINEER DATE 02/13/06
SCALE: HORIZ: AS NOTED VERT: AS NOTED
BAR IS ONE INCH ON ORIGINAL DRAWING ADJUST SCALES ACCORDINGLY 0" 1"

City of Kent Public Works Department Engineering Division

COVER SHEET

COW CREEK REALIGNMENT, LAKE MERIDIAN OUTLET, AND WETLAND RESTORATION IMPROVEMENTS

SHEET C01 OF 37
FILE NO. –

COVER SHEET.DWG D CISAKOWSKI 02/13/06

SECTION AND DETAIL REFERENCE

SECTIONS AND DETAILS ARE CROSS REFERENCED AS FOLLOWS:

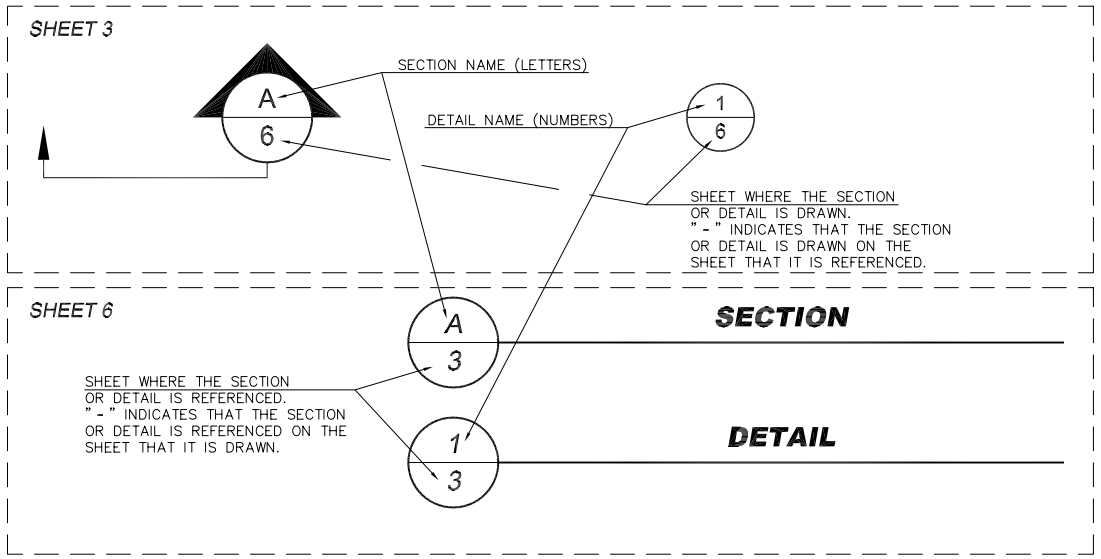

GRADING PLAN GUIDE

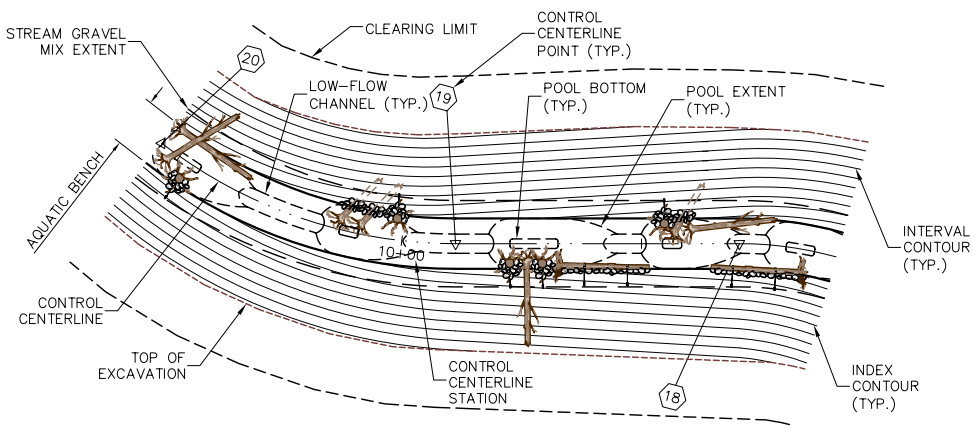

LEGEND OF LINES

EXISTING	PROPOSED	
AP AP AP		POWER LINE (AERIAL)
D D D		STORM DRAIN PIPE
		DITCH
X X		FENCE
		GUARD RAIL
		LAKE SHORELINE
		POND SHORELINE
		STREAM
		TRAIL
		DENSE TREE AREA BOUNDARY
		WETLAND
		WETLAND BUFFER
S S S		SANITARY SEWER PIPE
		CORPORATE LIMITS
		RIGHT-OF-WAY CENTERLINE
		RIGHT-OF-WAY
38	38	INTERVAL CONTOUR
35	35	INDEX CONTOUR
		EASEMENT
		FEMA FLOODPLAIN BOUNDARY
		LEGAL BOUNDARY
		PROPERTY LINE
		PARK BOUNDARY
		STATE SECTION LINE
AT AT AT		TELEPHONE LINE (AERIAL)

LEGEND OF MATERIAL SYMBOLS

EXISTING	PROPOSED	
		EARTH FILL
		STREAM GRAVEL MIX
		CRUSHED SURFACING
		CONCRETE

LEGEND OF SUBSURFACE INFORMATION

B-1	SOIL BORING WITH PIEZOMETER INSTALLED
PZ A-1	WETLAND SOIL BORING WITH PIEZOMETER INSTALLED
W	MONITORING WELL
S-1	SOIL SAMPLE LOCATION
TP-1	TEST PIT

NOTE:
SEE SHEET C04 FOR GEOTECHNICAL DATA REFERENCE.

LEGEND OF SYMBOLS

EXISTING	PROPOSED	
		EMBANKMENT
		STORM CULVERT
		STORM CATCH BASIN
		STORM SEWER MANHOLE
		UTILITY POLE
		UTILITY POLE ANCHOR
		TRANSMISSION TOWER
		POWER VAULT
		LIGHT
		SIGN
		SANITARY SEWER MANHOLE
		TELEPHONE RISER
		TELEPHONE VAULT
		TRAFFIC SIGNAL CONTROLLER
		TRAFFIC SIGNAL POLE
		TRAFFIC SIGNAL JUNCTION BOX
		FIRE HYDRANT
		WATER VALVE
		BOLLARD
		SURVEY CONTROL POINT

LEGEND OF TREE SYMBOLS

EXISTING	
	ALDER
	CEDAR
	CHERRY
	COTTONWOOD
	DOWNED TREE
	FIR
	HEMLOCK
	MAPLE
	SNAG
	WILLOW
	UNKNOWN

NOTE:
FOR PROPOSED REVEGETATION SYMBOLS, SEE SHEET L01

LEGEND OF LOG STRUCTURES

BL 17	SEE LWD CONTROL TABLE (SHEET C05) FOR STATION AND OFFSET. SEE DETAILS (SHEET C32) FOR INSTALLATION INSTRUCTIONS.
	BANK LOG (BL)
ED 02	
	EMBEDDED DIGGER LOG (ED)
FT 63	
	FALLEN TREE (FT)
RW 47	
	ROOT WAD (RW)
RL 09	
	REVETMENT LOG (RL)
	EXISTING FALLEN LOG

ABBREVIATIONS

Δ	TOTAL CURVE ANGLE
°	DEGREES
AVE	AVENUE
CB	CATCH BASIN
CMP	CORRUGATED METAL PIPE
CONC.	CONCRETE
D	STORM DRAIN
DI	DUCTILE IRON
E	EASTING
EL., ELEV.	ELEVATION
EX., EXIST.	EXISTING
FM	SANITARY SEWER FORCE MAIN
FT.	FOOT, FEET
G	NATURAL GAS
GV	GATE VALVE
HOR., HORIZ.	HORIZONTAL
I.E.	INVERT ELEVATION
IN.	INCH, INCHES
L	LENGTH
LF	LINEAR FEET
L.W.D.	LARGE WOOD DEBRIS
MAX.	MAXIMUM
MH	MANHOLE
MIN.	MINIMUM.
N	NORTHING
P	POWER
PC	POINT OF CURVATURE
PT	POINT OF TANGENCY
PVC	POLYVINYL CHLORIDE
PVMT	PAVEMENT
R	RADIUS
R.O.W.	RIGHT-OF-WAY
S	SANITARY SEWER
SCWS	SOOS CREEK WATER AND SEWER DISTRICT
SD	STORM DRAIN
SDMH	STORM DRAIN MANHOLE
SPECS	SPECIFICATIONS
SS	SANITARY SEWER
SSMH	SANITARY SEWER MANHOLE
STA	STATION
T	TELEPHONE
T.E.S.C.	TEMPORARY EROSION AND SEDIMENT CONTROL
TYP.	TYPICAL
VERT.	VERTICAL
W	WATER

90% Design Review Submittal - Not for Construction

MONTGOMERY WATER GROUP, INC.

NO.	REVISION	BY	DATE
–	–	–	–

DESIGNED: DJC | CHECKED: GAB | KENT PROJECT NO. –
DRAWN: DJC | PROJ MANGR: GAB | CONST. MGMT. REVIEW –
APPROVED: _____ CITY ENGINEER | DATE 02/13/06

SCALE: HORIZ: AS NOTED VERT: AS NOTED

BAR IS ONE INCH ON ORIGINAL DRAWING ADJUST SCALES ACCORDINGLY 0" 1"

KENT WASHINGTON
City of Kent
Public Works Department
Engineering Division

LEGENDS AND ABBREVIATIONS

COW CREEK REALIGNMENT, LAKE MERIDIAN OUTLET, AND WETLAND RESTORATION IMPROVEMENTS

SHEET C02 OF 37
FILE NO. –

LEGEND.DWG D. CISAKOWSKI 02/13/06

GENERAL NOTES

1. ALL WORK AND MATERIALS SHALL BE IN ACCORDANCE WITH THE CONTRACT DOCUMENTS FOR THE CONSTRUCTION OF COW CREEK REALIGNMENT, LAKE MERIDIAN OUTLET, AND WETLAND RESTORATION MPROVEMENTS (FEBRUARY 2006), THE LATEST EDITION OF THE CITY OF KENT STANDARD SPECIFICATIONS, AND WSDOT/APWA STANDARD SPECIFICATIONS, 2004, AND THE COE NATIONAL PERMIT CONDITIONS, AND THE WDFW HPA PERMIT CONDITIONS. THE CITY OF KENT RESERVES THE RIGHT TO REJECT ANY DAMAGED AND/OR NON-COMPLIANT CONSTRUCTION MATERIAL.

2. PRIOR TO ANY CONSTRUCTION ACTIVITY, THE CONTRACTOR SHALL SCHEDULE AND ATTEND A PRE-CONSTRUCTION CONFERENCE WITH THE CITY OF KENT CONSTRUCTION INSPECTION PERSONNEL BY PHONING 253-856-5500.

3. AN APPROVED PLAN SET MUST BE ON THE JOB SITE WHENEVER CONSTRUCTION IS IN PROGRESS.

4. ALL SITE WORK IMPROVEMENTS SHALL BE CONSTRUCTED IN ACCORDANCE WITH THESE APPROVED PLANS. ANY DEVIATION FROM THE PLANS WILL REQUIRE APPROVAL FROM THE OWNER, ENGINEER AND APPROPRIATE PUBLIC AGENCIES.

5. IT SHALL BE THE SOLE RESPONSIBILITY OF THE CONTRACTOR TO OBTAIN STREET USE AND ANY OTHER RELATED PERMITS PRIOR TO ANY CONSTRUCTION ACTIVITY.

6. ALL LOCATIONS OF EXISTING UTILITIES SHOWN HEREON HAVE BEEN ESTABLISHED BY FIELD SURVEY OR OBTAINED FROM AVAILABLE RECORDS AND SHOULD THEREFORE BE CONSIDERED APPROXIMATE ONLY AND NOT NECESSARILY COMPLETE. IT IS THE SOLE RESPONSIBILITY OF THE CONTRACTOR TO INDEPENDENTLY VERIFY THE ACCURACY OF ALL UTILITY LOCATIONS SHOWN AND TO FURTHER DISCOVER AND AVOID ANY OTHER UTILITIES NOT SHOWN HEREON WHICH MAY BE AFFECTED BY THE IMPLEMENTATION OF THIS PLAN. THE CONTRACTOR SHALL CONTACT THE UNDERGROUND UTILITIES LOCATION SERVICE (1-800-424-5555) AT LEAST 48 HOURS PRIOR TO CONSTRUCTION. THE OWNER OR HIS REPRESENTATIVE AND THE ENGINEER SHALL BE CONTACTED IMMEDIATELY IF CONFLICTS EXIST.

7. LOCATIONS OF ROADWAYS, BUILDINGS AND PARKING AREAS SHOWN HEREON ARE APPROXIMATE. IMPROVEMENT AND STRUCTURE LOCATIONS SHALL BE FIELD SET BY THE SURVEYOR/ENGINEER AS REQUIRED.

8. ANY APPROVED CUTS OF EXISTING PUBLIC ROADWAYS SHALL BE BACKFILLED AND COMPACTED IN ACCORDANCE WITH CITY OF KENT STANDARDS. ALL CUTS INTO EXISTING ASPHALT SHALL BE ALONG NEAT, CONTINUOUS, SAWED, OR WHEEL CUT LINES. A TEMPORARY COLD MIX PATCH MUST BE PLACED IMMEDIATELY AFTER BACKFILL AND COMPACTION. THIS EXISTING ROAD CUT SHALL BE REPLACED WITH AT LEAST THREE (3) INCHES OF COMPACTED CL "B" ASPHALT CONCRETE, SIX (6) INCH CRUSHED ROCK SURFACING TOP COURSE (5/8 INCH MINUS), AS REQUIRED DEPENDENT UPON A SOILS ENGINEER'S RECOMMENDATION AND TESTS. IN NO CASE SHALL THE REPLACEMENT BE LESS THAN THE EXISTING SECTION.

9. CONSTRUCTION OF DEWATERING (GROUNDWATER INTERCEPTION) SYSTEMS BE IN ACCORDANCE WITH APPROVED CONTRACTOR PLANS.

10. CONTRACTOR SHALL PROVIDE AND INSTALL ALL REGULATORY AND WARNING SIGNS PER THE LATEST EDITION OF MANUAL ON UNIFORM TRAFFIC CONTROL DEVICES.

11. THE "SUBSURFACE GEOTECHNICAL ENGINEERING EVALUATION" IS INCLUDED IN APPENDIX B OF THE CONTRACT DOCUMENTS.

ADDITIONAL CONTRACTOR RESPONSIBILITIES:

1. THE CONTRACTOR SHALL BE RESPONSIBLE FOR PROVIDING ADEQUATE SAFEGUARDS, SAFETY DEVICES, PROTECTIVE EQUIPMENT, TRAFFIC CONTROL, AND ANY OTHER NEEDED ACTIONS TO PROTECT THE LIFE, HEALTH, AND SAFETY OF THEIR WORKERS AND THE PUBLIC AND TO PROTECT PROPERTY IN CONNECTION WITH THE PERFORMANCE OF WORK COVERED BY THE CONTRACT. ANY WORK WITHIN THE TRAVELED RIGHT-OF-WAY SHALL REQUIRE TRAFFIC CONTROL AS NECESSARY TO MEET THE PROVISIONS OF RCW 47.36.200 THROUGH 47.36.230 AND OTHER REGULATIONS WHICH MAY APPLY.

2. NOT ALL EXISTING UTILITIES ARE SHOWN ON THE DRAWINGS. PRIOR TO CONSTRUCTION, THE CONTRACTOR SHALL CONTACT ALL UTILITY OWNERS AND THE ONE-CALL LOCATE SERVICE TO CONFIRM UTILITY LOCATIONS AND HAVE THEM FIELD LOCATED PRIOR TO CONSTRUCTION. THE CONTRACTOR SHALL PROTECT OR RELOCATE (AS REQUIRED) EXISTING CONFLICTING UTILITIES IN ACCORDANCE WITH THE UTILITY OWNER REQUIREMENTS AND PROCEDURES.

3. THE CONTRACTOR SHALL PROVIDE TEMPORARY CUT SLOPES AND TEMPORARY SHORING AS NECESSARY FOR THE CONSTRUCTION AS SHOWN. THE STABILITY OF ALL TEMPORARY SLOPES AND SHORING IS THE SOLE RESPONSIBILITY OF THE CONTRACTOR.

4. THE CONTRACTOR IS RESPONSIBLE FOR THE CARE AND TEMPORARY DIVERSION OF SURFACE WATERS AS MAY BE REQUIRED DURING CONSTRUCTION. THIS SHALL INCLUDE THE REQUIREMENT FOR MAINTAINING EXCAVATIONS IN A DEWATERED CONDITION SO AS NOT TO ADVERSELY AFFECT SUBGRADE CONDITIONS OR FILL PLACEMENT. A PLAN FOR DEWATERING EXCAVATIONS AND CONTROL OF SURFACE AND GROUND WATERS DURING CONSTRUCTION WITHIN THE PROJECT LIMITS SHALL BE SUBMITTED TO THE OWNER FOR REVIEW/ACCEPTANCE PRIOR TO INTIATING CONSTRUCTION.

5. THE CONTRACTOR IS RESPONSIBLE FOR ALL TEMPORARY EROSION AND SEDIMENTATION CONTROL DURING CONSTRUCTION TO ACHIEVE REQUIRED CONSTRUCTION RUNOFF WATER QUALITY COMPLIANCE. SEE SHEETS C33 TO C36 FOR DETAILS.

PROJECT DESCRIPTION

THESE DESIGN PLANS INCLUDE STREAM RELOCATION AND RESTORATION WORK FOR COW CREEK, CITY OF KENT, LOCATED IN SECTION 26, TOWNSHIP 22N, RANGE 5E, NORTH OF SR-516 (KENT KANGLEY ROAD) AND ITS INTERSECTION WITH 152ND AVE NE. THE IMPROVEMENTS INCLUDE 1) MODIFICATIONS TO APPROXIMATELY 500 FEET OF THE LAKE MERIDIAN OUTLET CHANNEL, LAKE LEVEL/FLOW CONTROLS AND CULVERT CROSSING MODIFICATIONS THROUGH LAKE MERIDIAN PARK; 2) CREATION OF APPROXIMATELY 2,500 FEET OF NEW RESTORED COW CREEK CHANNEL FROM THE EXISTING CHANNEL TO BIG SOOS CREEK THROUGH GARY GRANT SOOS CREEK PARK; AND 3) LOW FLOW DIVERSION TO THE EXISTING CHANNEL WITH RESTORATION MODIFICATIONS TO DOWNSTREAM WETLANDS ALONG THE EXISTING COW CREEK CHANNEL. THIS WORK IS BEING CONDUCTED IN COORDINATION WITH THE CITY OF KENT AND THE U.S. ARMY CORPS OF ENGINEERS UNDER THE GREEN-DUWAMISH ECOSYSTEM RESTORATION PROGRAM.

PROJECT DEVELOPMENT DESIGN TEAM

OWNER:	CITY OF KENT PUBLIC WORKS DEPARTMENT 220 Fourth Ave. S Kent, WA 98032-5895 (253) 856-5552
SURVEYOR:	BAIMA & HOLMBERG 100 FRONT ST. S. ISSAQUAH, WA 98027-3817 (425) 392-0250
CIVIL (WATER RESOURCES) ENGINEER:	MONTGOMERY WATER GROUP 3312 ROSEDALE ST, SUITE 204 GIG HARBOR, WA 98335 (253) 858-5552
GEOTECHNICAL ENGINEER:	GEOENGINEERS 8410 154TH AVE SE REDMOND, WA 98052 (425) 861-6000
FISHERIES BIOLOGIST:	WATERSHED COMPANY 1410 MARKET STREET KIRKLAND, WA 98033 (425) 822-5242
WETLANDS SCIENTIST:	SPRINGWOOD ASSOCIATES 3644 ALBION PL N. SEATTLE, WA 98103 (425) 545-1117
HYDROLOGIST:	MGS ENGINEERING CONSULTANTS 7326 BOSTON HARBOR RD. NE OLYMPIA, WA 98506 (253) 841-1573
STRUCTURAL ENGINEER:	CONSULTING ENGINEERING SERVICES 1211 FOURTH AVENUE EAST OLYMPIA, WA 98506 (360) 705-2185

MONTGOMERY WATER GROUP, INC.

90% Design Review Submittal - Not for Construction

NOTES.DWG D CISAKOWSKI 02/13/06

NO.	REVISION	BY	DATE
–	–	–	–

DESIGNED: DJC | CHECKED: GAB | KENT PROJECT NO. – | SCALE: HORIZ: AS NOTED
DRAWN: DJC | PROJ MANGR: GAB | CONST. MGMT. REVIEW – | VERT: AS NOTED
APPROVED: _____ CITY ENGINEER | DATE 02/13/06

BAR IS ONE INCH ON ORIGINAL DRAWING ADJUST SCALES ACCORDINGLY 0" 1"

KENT WASHINGTON
City of Kent
Public Works Department
Engineering Division

GENERAL NOTES AND PROJECT INFORMATION

COW CREEK REALIGNMENT, LAKE MERIDIAN OUTLET, AND WETLAND RESTORATION IMPROVEMENTS

SHEET C03 OF 37

FILE NO. –

DATUM

HORIZONTAL:
CITY OF KENT (NAD 83/91)

VERTICAL:
NGVD 29

VERTICAL CONVERSION:
CITY OF KENT (NAVD 88) = NGVD 29 + 3.51'

DATA SOURCE NOTES

1. TOPOGRAPHIC SURVEY PROVIDED BY BAIMA & HOLMBURG, INC. (ISSAQUAH, WA), JULY 8, 2003. THE SURVEY WAS CONDUCTED FROM JANUARY 16, 2001 THROUGH JULY 7, 2003. ADDITIONAL SURVEY CONDUCTED BY BAIMA & HOLMBURG, INC., JUNE, 2005.

2. GEOTECHNICAL DATA (BORE LOGS) SHOWN ON PROFILES PROVIDED AS FOLLOWS:
- TEST PITS TP-1 THROUGH TP-6: GEOENGINEERS, MARCH, 2000.
- BORINGS B-1 THROUGH B-7: SHANNON & WILSON, INC., MAY, 2002.
- TEST PITS TP-8 THROUGH 12: GEOENGINEERS, FEBRUARY, 2006.
- BORINGS B-8 THROUGH 15: GEOENGINEERS, FEBRUARY, 2006.
- BORINGS PZ A-1 THROUGH A-4, C-1, D-1, E-1: NORTHWEST LAND & WATER, INC., MARCH, 2003.

3. 100-YEAR FLOODPLAIN ELEVATION DERIVED FROM FEMA FIS FLOOD PROFILES, MAY 16, 1995.

EXISTING SURVEY CONTROL POINTS

EXAMPLE:
50 = POINT NUMBER
COK BM 724 = DESC.
N 134,153.03 = NORTHING
E 1,316,535.78 = EASTING
EL. 374.47 = ELEVATION
5/30/01 = DATE OF SURVEY

50 COK BM 724 N 134,153.03 E 1,316,535.78 EL. 374.47 5/30/01	92 MAG N 134,263.13 E 1,315,895.96 EL. 381.65 5/30/01	140 N N 134,782.87 E 1,317,430.73 EL. 353.94 5/30/01	2207 SET NAIL N 135,092.83 E 1,317,217.51 EL. 353.25 5/30/01	2608 SET NAIL N 132,729.66 E 1,316,516.42 EL. 366.54 6/22/01	[NONE] SET LTBRD PL N 134,963.21 E 1,317,718.83 EL. 319.96 7/7/03
51 MAG N 134,270.60 E 1,316,237.29 EL. 381.73 5/30/01	93 N 40D N 134,439.62 E 1,316,310.04 EL. 377.21 5/30/01	682 WCR N 134,271.56 E 1,315,897.54 EL. 380.98 5/30/01	2220 SET NAIL N 135,113.10 E 1,317,326.20 EL. 328.96 5/30/01	2830 SET H/T N 134,974.65 E 1,317,302.60 EL. 353.09 5/3/02	[NONE] SET LTBRD PL N 134,961.64 E 1,317,818.92 EL. 318.66 7/7/03
53 PK N 134,683.07 E 1,315,542.91 EL. 387.54 5/30/01	94 SET 40D NAIL N 134,680.11 E 1,316,787.56 EL. 359.18 5/30/01	1310 CTB N 134,647.58 E 1,316,855.18 EL. 358.95 5/30/01	2388 SET H/T N 134,946.27 E 1,317,529.10 EL. 326.85 5/30/01	2841 SET H/T N 135,041.04 E 1,317,423.13 EL. 327.81 5/3/02	[NONE] SET LTBRD PL N 134,960.41 E 1,317,897.68 EL. 318.51 7/7/03
54 MAG N 135,182.15 E 1,315,564.49 EL. 400.60 5/30/01	97 SET 40D NAIL N 134,774.34 E 1,316,383.54 EL. 366.70 5/30/01	1316 CTB N 134,651.67 E 1,316,972.31 EL. 358.93 5/30/01	2423 SET H/T N 134,981.72 E 1,317,633.99 EL. 321.92 5/30/01	2874 SET H/T N 135,156.28 E 1,317,588.57 EL. 320.22 5/3/02	[NONE] SET LTBRD PL N 134,959.29 E 1,317,970.04 EL. 317.55 7/7/03
55 40D NAIL N 135,500.31 E 1,315,574.37 EL. 394.62 5/30/01	99 SET 40D NAIL N 135,004.32 E 1,316,303.69 EL. 369.57 5/30/01	1614 SET NAIL N 134,999.57 E 1,316,906.02 EL. 360.83 5/30/01	2459 SET H/T N 134,884.63 E 1,317,790.03 EL. 319.10 5/30/01	2897 SET H/T N 135,288.75 E 1,317,642.46 EL. 317.45 5/3/02	[NONE] SET LTBRD PL* N 134,957.38 E 1,318,064.70 EL. 315.09 7/7/03
60 N N 135,503.13 E 1,316,753.37 EL. 363.46 5/30/01	101 SET 40D NAIL N 135,134.47 E 1,316,263.97 EL. 370.45 5/30/01	1615 FND NAIL #65 N 135,053.20 E 1,317,026.65 EL. 359.37 5/30/01	2495 SET H/T N 134,834.96 E 1,317,968.41 EL. 317.99 5/30/01	2915 ANGLE IRON N 135,298.95 E 1,317,708.71 EL. 317.28 5/3/02	[NONE] SET LTBRD PL N 134,726.43 E 1,317,511.39 EL. 350.74 7/7/03
62 N N 135,433.22 E 1,316,896.32 EL. 359.90 5/30/01	103 NAIL N 134,068.82 E 1,316,601.88 EL. 369.30 5/30/01	1633 H&T N 134,826.23 E 1,316,820.64 EL. 359.48 5/30/01	2924 SET H/T N 134,650.43 E 1,316,770.45 EL. 358.89 5/30/01	2923 SET MAG NL N 134,640.16 E 1,317,174.00 EL. 356.61 5/3/02	[NONE] SET LTBRD N 134,684.40 E 1,317,510.68 EL. 348.92 7/7/03
63 N N 135,209.47 E 1,317,014.13 EL. 359.47 5/30/01	104 NAIL N 134,258.11 E 1,316,279.02 EL. 381.28 5/30/01	1701 SET H&T N 134,752.48 E 1,316,601.25 EL. 360.80 5/30/01	2541 SET NAIL N 134,622.25 E 1,316,715.69 EL. 360.32 6/22/01	2928 SET MAG NL N 134,641.95 E 1,316,914.01 EL. 358.69 5/3/02	
66 N N 134,998.20 E 1,317,030.74 EL. 359.48 5/30/01	105 NAIL N 134,356.00 E 1,315,965.45 EL. 380.86 5/30/01	1713 SET H&T N 134,907.39 E 1,316,600.79 EL. 360.44 5/30/01	2565 SET NIP N 133,625.32 E 1,316,770.39 EL. 354.68 6/22/01	2632 SET MAG N 132,157.03 E 1,316,542.02 EL. 350.91 7/7/03	
68 N N 134,714.03 E 1,316,897.28 EL. 359.71 5/30/01	106 NAIL N 134,412.90 E 1,315,821.30 EL. 381.50 5/30/01	2066 SET NAIL N 134,775.70 E 1,317,145.86 EL. 356.75 5/30/01	2566 SET NIP N 133,001.30 E 1,316,594.76 EL. 373.01 6/22/01	[NONE] SET MAG N 133,171.50 E 1,316,798.69 EL. 354.14 7/7/03	

PROPOSED STREAM CONTROL CENTERLINE POINTS

EXAMPLE (STREAM CENTERLINE POINT):
02 NO. 2 = POINT NUMBER
PC = DESCRIPTION
STA. XX+XX.XX = STREAM STATION
N 134,153.03 = NORTHING
E 1,316,535.78 = EASTING
EL. 374.47 = FINISH GRADE ELEVATION

EXAMPLE (CURVE RADIUS CENTERLINE POINT):
A NO. A = POINT NUMBER
CURVE CENTER = DESCRIPTION
N 134672.89 = NORTHING
E 1318105.24 = EASTING
R=100.00 = CURVE RADIUS
L=69.71 = CURVE LENGTH
Δ=39.94° = CURVE TOTAL ANGLE

NO. 00 STA. 0+00.00 CONFLUENCE N E EL.	NO. 01	NO. A	NO. 02	NO. 03	NO. B
NO. 04	NO. 05	NO. C	NO. 06	NO. 07	NO. D
NO. 08	NO. 09	NO. E	NO. 10	NO. 11	NO. F
NO. 12	NO. 13	NO. G	NO. 14	NO. 15	NO. H
NO.16	NO. 17	NO. I	NO. 18	NO. 19	NO. J
NO. 20	NO. 21	NO. K	NO. 22	NO. 23	NO. L
NO. 24	NO. 25	NO. M	NO. 26	NO. 27	NO. N
NO. 28	NO. 29	NO. O	NO. 30	NO. 31	NO. P
NO. 32	NO. 33	NO. Q	NO. 34	NO. 35	NO. R
NO. 36	NO. 37	NO. S	NO. 38	NO. 39	NO. T
NO. 40	NO. 41	NO. U	NO. 42	NO. 43	NO. V
NO. 44	NO. 45	NO. W	NO. 46	NO. 47	NO. 48
NO.49	NO. X	NO. 50	NO. 51	NO. Y	NO. 52

90% Design Review Submittal - Not for Construction

MONTGOMERY WATER GROUP, INC.
Issaquah, WA Cody, WY

CONTROL.DWG D CISAKOWSKI 02/13/06

NO.	REVISION	BY	DATE
–	–	–	–

DESIGNED: DJC | CHECKED: GAB | KENT PROJECT NO. – | SCALE:
DRAWN: DJC | PROJ MANGR: GAB | CONST. MGMT. REVIEW – | HORIZ: AS NOTED | VERT: AS NOTED
APPROVED: _____ CITY ENGINEER | DATE 02/13/06

BAR IS ONE INCH ON ORIGINAL DRAWING ADJUST SCALES ACCORDINGLY
0" 1"

KENT WASHINGTON
City of Kent
Public Works Department
Engineering Division

SURVEY CONTROL

COW CREEK REALIGNMENT,
LAKE MERIDIAN OUTLET, AND
WETLAND RESTORATION IMPROVEMENTS

SHEET C04 OF 37
FILE NO. –

PROPOSED STREAM CONTROL CENTERLINE POINTS

EXAMPLE (STREAM CENTERLINE POINT):
(02) NO. 2 = POINT NUMBER
PC = DESCRIPTION
STA. XX+XX.XX = STREAM STATION
N 134,153.03 = NORTHING
E 1,316,535.78 = EASTING
EL. 374.47 = FINISH GRADE ELEVATION

EXAMPLE (CURVE RADIUS CENTERLINE POINT):
(A) NO. A = POINT NUMBER
CURVE CENTER = DESCRIPTION
N 134672.89 = NORTHING
E 1318105.24 = EASTING
R=100.00 = CURVE RADIUS
L=69.71 = CURVE LENGTH
Δ=39.94° = CURVE TOTAL ANGLE

NO. 53	NO. Z	NO. 54	NO. 55	NO. AA	NO. 56
NO. BB	NO. 57	NO. 58	NO. 59	NO. CC	NO. 60
NO. DD	NO. 61	NO. 62			

PROPOSED WETLAND CONTROL CENTERLINE POINTS

EXAMPLE (WETLAND CENTERLINE POINT):
(02) NO. 2 = POINT NUMBER
STA. XX+XX.XX = WETLAND STATION
N 134,153.03 = NORTHING
E 1,316,535.78 = EASTING
EL. 374.47 = FINISH GRADE ELEVATION

NO. 1	NO. 2	NO. 3	NO. 4	NO. 5	NO. 6
NO.7	NO. 8	NO. 9	NO. 10	NO. 11	NO. 12
NO. 13	NO. 14	NO. 15	NO. 16	NO. 17	NO.18
NO. 19	NO. 20	NO. 21	NO. 22	NO. 23	NO. 24
NO. 25	NO. 26	NO. 27			

PROPOSED LARGE WOODY DEBRIS CONTROL POINTS

EXAMPLE (LWD REFERENCE POINT):
(BL | 01) BL | 01 = LWD TYPE | LWD NUMBER
STA. XX+XX.XX = STREAM STATION
R X.X' = OFFSET

BL | 01	BL | 02	BL | 03	BL | 04	BL | 05
BL | 06	BL | 07	BL | 08	BL | 09	BL | 10
BL | 11	BL | 12	BL | 13	BL | 14	BL | 15
BL | 16	BL | 17	BL | 18	BL | 19	BL | 20
BL | 21	BL | 22	BL | 23	BL | 24	BL | 25
BL | 26	BL | 27	BL | 28	BL | 29	BL | 30
BL | 31	BL | 32	BL | 33	BL | 34	BL | 35
BL | 35	BL | 36	BL | 37	BL | 38	BL | 39
BL | 41	BL | 42	BL | 43	BL | 44	

FT | 01	FT | 02	FT | 03	FT | 04	FT | 05
FT | 06	FT | 07	FT | 08	FT | 09	FT | 10
FT | 11	FT | 12	FT | 13	FT | 14	FT | 15
FT | 16	FT | 17	FT | 18	FT | 19	FT | 20
FT | 21	FT | 22	FT | 23	FT | 24	FT | 25
FT | 26	FT | 27	FT | 28	FT | 29	FT | 30
FT | 31	FT | 32	FT | 33	FT | 34	FT | 35
FT | 36	FT | 37	FT | 38	FT | 39	FT | 40
FT | 41	FT | 42	FT | 43	FT | 44	FT | 45
FT | 46	FT | 47	FT |48	FT | 49	FT | 50
FT | 51	FT | 52	FT | 53	FT | 54	FT | 55
FT | 56	FT | 57	FT | 58	FT | 59	FT | 60
FT | 61	FT | 62	FT | 63	FT | 64	FT | 65
FT | 66	FT | 67	FT | 68	FT | 69	FT | 70
FT | 71	FT | 72	FT | 73	FT | 74	

PROPOSED LARGE WOODY DEBRIS CONTROL POINTS

EXAMPLE (LWD REFERENCE POINT):
(RW | 01) RW | 01 = LWD TYPE | LWD NUMBER
STA. XX+XX.XX = STREAM STATION
R X.X' = OFFSET

RW | 01	RW | 02	RW | 03	RW | 04	RW | 05
RW | 06	RW | 07	RW | 08	RW | 09	RW | 10
RW | 11	RW | 12	RW | 13	RW | 14	RW | 15
RW | 16	RW | 17	RW | 18	RW | 19	RW | 20
RW | 21	RW | 22	RW | 23	RW | 24	RW | 25
RW | 26	RW | 27	RW | 28	RW | 29	RW | 30
RW | 31	RW | 32	RW | 33	RW | 34	RW | 35
RW | 36	RW | 37	RW | 38	RW | 39	RW | 40
RW | 41	RW | 42	RW | 43	RW | 44	RW | 45
RW | 46	RW | 47	RW | 48	RW | 49	RW | 50
RW | 51	RW | 52	RW | 53	RW | 54	RW | 55
RW | 56	RW | 57	RW | 58	RW | 59	RW | 60
RW | 61	RW | 62	RW | 63	RW | 64	RW | 65
RW | 66	RW | 67	RW | 68	RW | 69	RW | 70
RW | 71	RW | 72	RW | 73	RW | 74	RW | 75
RW | 76	RW | 77	RW | 78		

RL | 01	RL | 02	RL | 03	RL | 04	RL | 05
RL | 06	RL | 07	RL | 08	RL | 09	RL | 10
RL | 11	RL | 12	RL | 13	RL | 14	RL | 15
RL | 16	RL | 17	RL | 18	RL | 19	RL | 24
RL | 21	RL | 22	RL | 23	RL | 24	RL | 25

ED | 01	ED | 02	ED | 02	ED | 04

90% Design Review Submittal - Not for Construction

MONTGOMERY WATER GROUP, INC.
Kirkland, WA Bellevue, WA

NO.	REVISION	BY	DATE
–	–	–	–

DESIGNED: DJC | CHECKED: GAB | KENT PROJECT NO. –
DRAWN: DJC | PROJ MANGR: GAB | CONST. MGMT. REVIEW –
APPROVED: _____ CITY ENGINEER
SCALE: HORIZ: AS NOTED VERT: AS NOTED
DATE 02/13/06
BAR IS ONE INCH ON ORIGINAL DRAWING ADJUST SCALES ACCORDINGLY 0" 1"

KENT WASHINGTON
City of Kent
Public Works Department
Engineering Division

SURVEY CONTROL

COW CREEK REALIGNMENT,
LAKE MERIDIAN OUTLET, AND
WETLAND RESTORATION IMPROVEMENTS

SHEET C05 OF 37
FILE NO. –

CONTROL.DWG D OSAKOWSKI 02/13/06

PROPOSED POOL CONTROL POINTS

EXAMPLE (POOL REFERENCE POINT):
P | 01 RW | 01 = POOL NUMBER AT OUTLET RIFFLE CREST
STA. XX+XX.XX = STREAM STATION
R X.X' = OFFSET LOW FLOW CHANNEL CENTERLINE
L=X' = POOL BOTTOM LENGTH

P | 01	P | 02	P | 03	P | 04	P | 05
P | 06	P | 07	P | 08	P | 09	P | 10
P | 11	P | 12	P | 13	P | 14	P | 15
P | 16	P | 17	P | 18	P | 19	P | 20
P | 21	P | 22	P | 23	P | 24	P | 25
P | 26	P | 27	P | 28	P | 29	P | 30
P | 31	P | 32	P | 33	P | 34	P | 35
P | 36	P | 37	P | 38	P | 39	P | 40
P | 41	P | 42	P | 43	P | 44	P | 45
P | 46	P | 47	P | 48	P | 49	P | 50
P | 51	P | 52	P | 53	P | 54	P | 55
P | 56	P | 57	P | 58		

90% Design Review Submittal - Not for Construction

MONTGOMERY WATER GROUP, INC.

NO.	REVISION	BY	DATE
–	–	–	–

DESIGNED: DJC | CHECKED: GAB | KENT PROJECT NO. –
DRAWN: DJC | PROJ MANGR: GAB | CONST. MGMT. REVIEW –
APPROVED: _____ CITY ENGINEER
SCALE: HORIZ: AS NOTED VERT: AS NOTED
DATE 02/13/06
BAR IS ONE INCH ON ORIGINAL DRAWING ADJUST SCALES ACCORDINGLY 0" 1"

KENT WASHINGTON
City of Kent
Public Works Department
Engineering Division

SURVEY CONTROL

COW CREEK REALIGNMENT,
LAKE MERIDIAN OUTLET, AND
WETLAND RESTORATION IMPROVEMENTS

SHEET C06 OF 37
FILE NO. –

CONTROL.DWG D CISAKOWSKI 02/13/06

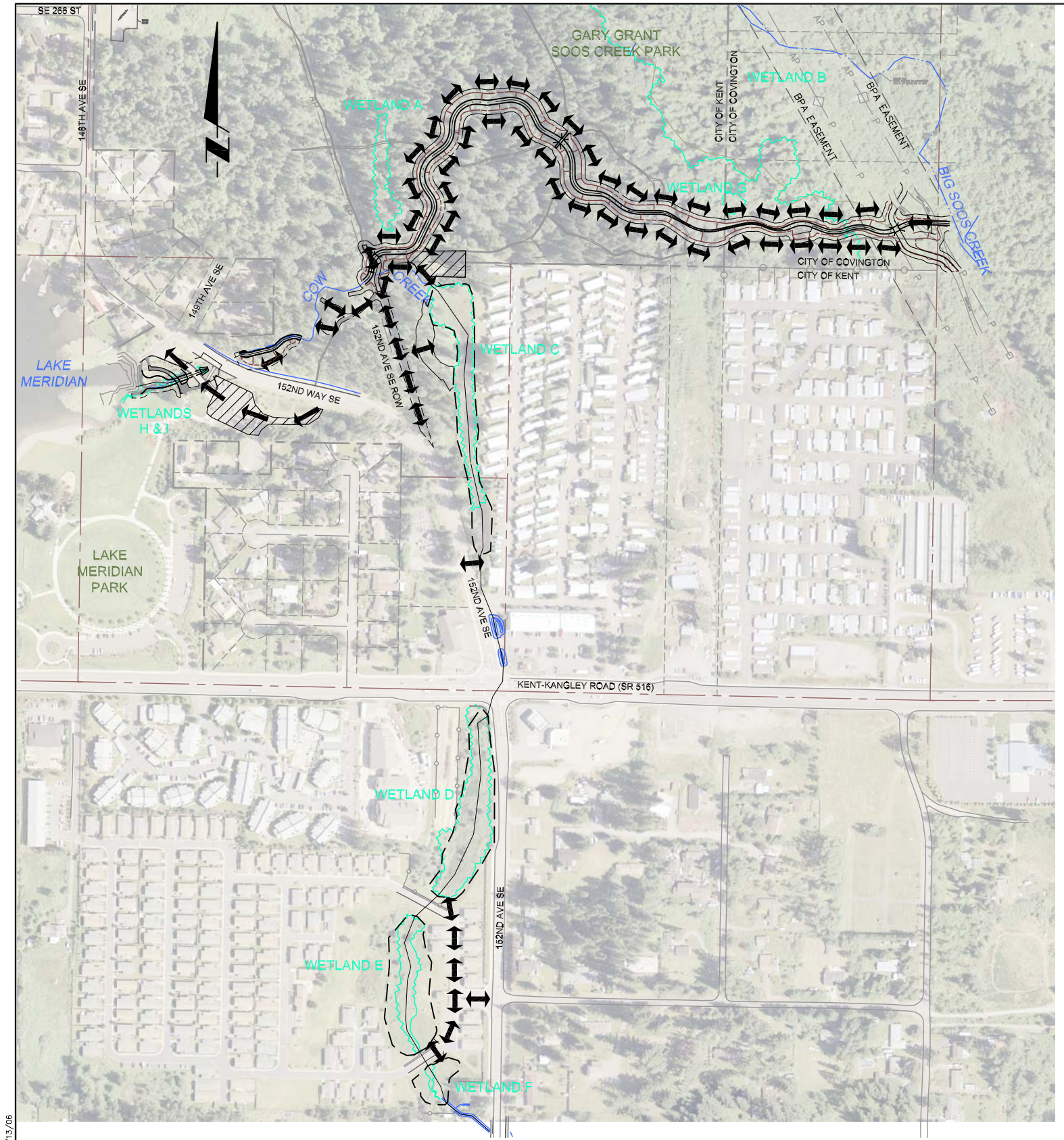

SITE ACCESS AND STAGING AREA NOTES

1. SITE ACCESS AND STAGING AREAS SHOWN ON THIS 90% DESIGN SUBMITTAL ARE PRELIMINARY AND SUBJECT TO CONFIRMATION WITH LAND OWNERS BY THE CITY OF KENT.

2. REQUIRED CONSTRUCTION AND PERMANENT EASEMENTS (NOT SHOWN) WILL BE SECURED BY THE CITY OF KENT PRIOR TO CONSTRUCTION.

3. RIGHT-OF-WAY PERMITS FOR CONSTRUCTION ACCESS TIES TO PUBLIC ROADWAYS, INCLUDING REQUIRED TRAFFIC CONTROL PLANS, WILL BE SECURED/PREPARED BY THE CITY OF KENT PRIOR TO CONSTRUCTION.

4. STAGING AREA NOTES TO BE PREPARED AT 100% SUBMITTAL.

SITE ACCESS AND STAGING AREA LEGEND

ONE-WAY CONSTRUCTION ACCESS

TWO-WAY CONSTRUCTION ACCESS

PROPOSED STAGING AREAS

DAVID J. CISAKOWSKI — STATE OF WASHINGTON — 30193 — REGISTERED PROFESSIONAL ENGINEER — EXPIRES: 6/9/06

GERALD A. BIBER — STATE OF WASHINGTON — 24332 — REGISTERED PROFESSIONAL ENGINEER — EXPIRES: 11-03-07

SITE ACCESS AND STAGING PLAN

0 100' 200'

SCALE: 1"=100'

90% Design Review Submittal - Not for Construction

MONTGOMERY WATER GROUP, INC.

NO.	REVISION	BY	DATE
–	–	–	–

DESIGNED: DJC | CHECKED: GAB | KENT PROJECT NO. –
DRAWN: DJC | PROJ MANGR: GAB | CONST. MGMT. REVIEW –
APPROVED: _____ CITY ENGINEER

SCALE: HORIZ: AS NOTED VERT: AS NOTED
DATE 02/13/06

BAR IS ONE INCH ON ORIGINAL DRAWING ADJUST SCALES ACCORDINGLY
0" 1"

KENT WASHINGTON — City of Kent Public Works Department Engineering Division

SITE ACCESS AND STAGING AREA PLAN

COW CREEK REALIGNMENT, LAKE MERIDIAN OUTLET, AND WETLAND RESTORATION IMPROVEMENTS

SHEET C07 OF 37

FILE NO. –

STAGING AND ACCESS.DWG D CISAKOWSKI 02/13/06

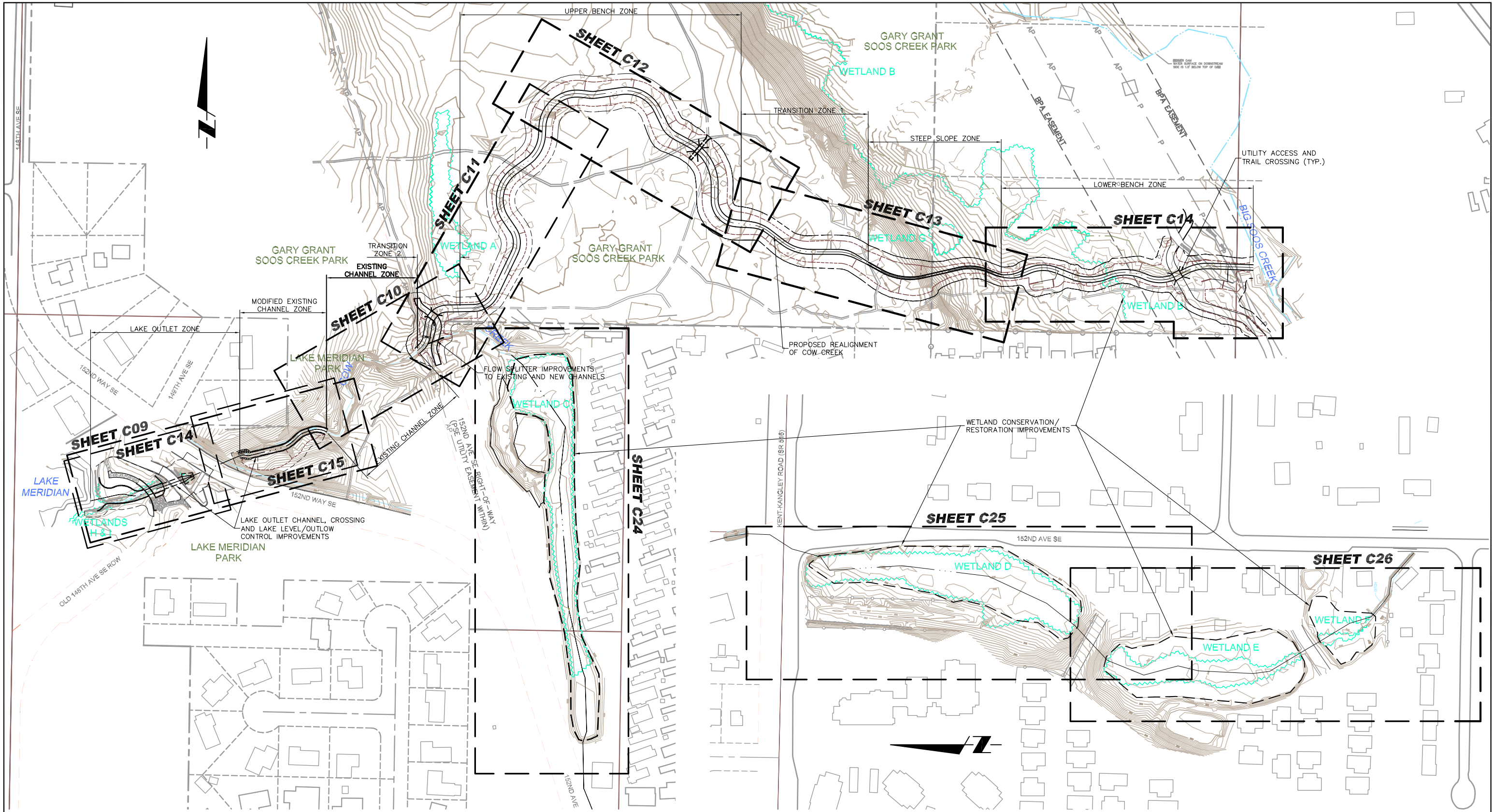

SHEET LAYOUT PLAN NORTH

0 100' 200'
SCALE: 1"=100'

SHEET LAYOUT PLAN SOUTH

0 100' 200'
SCALE: 1"=100'

DAVID J. CISAKOWSKI, STATE OF WASHINGTON, 30193, REGISTERED PROFESSIONAL ENGINEER — EXPIRES: 6/9/06

GERALD A. BIBBEY, STATE OF WASHINGTON, 24332, REGISTERED PROFESSIONAL ENGINEER — EXPIRES: 11-03-07

90% Design Review Submittal - Not for Construction

MONTGOMERY WATER GROUP, INC.

NO.	REVISION	BY	DATE
–	–	–	–

DESIGNED: DJC | CHECKED: GAB | KENT PROJECT NO. –
DRAWN: DJC | PROJ MANGR: GAB | CONST. MGMT. REVIEW –
APPROVED: _____ CITY ENGINEER

SCALE: HORIZ: AS NOTED | VERT: AS NOTED
DATE 02/13/06

BAR IS ONE INCH ON ORIGINAL DRAWING ADJUST SCALES ACCORDINGLY
0" 1"

KENT WASHINGTON
City of Kent
Public Works Department
Engineering Division

SITE PLAN AND SHEET LAYOUT

COW CREEK REALIGNMENT, LAKE MERIDIAN OUTLET, AND WETLAND RESTORATION IMPROVEMENTS

SHEET C08 OF 37
FILE NO. –

SHEET LAYOUT.DWG D CISAKOWSKI 02/13/06

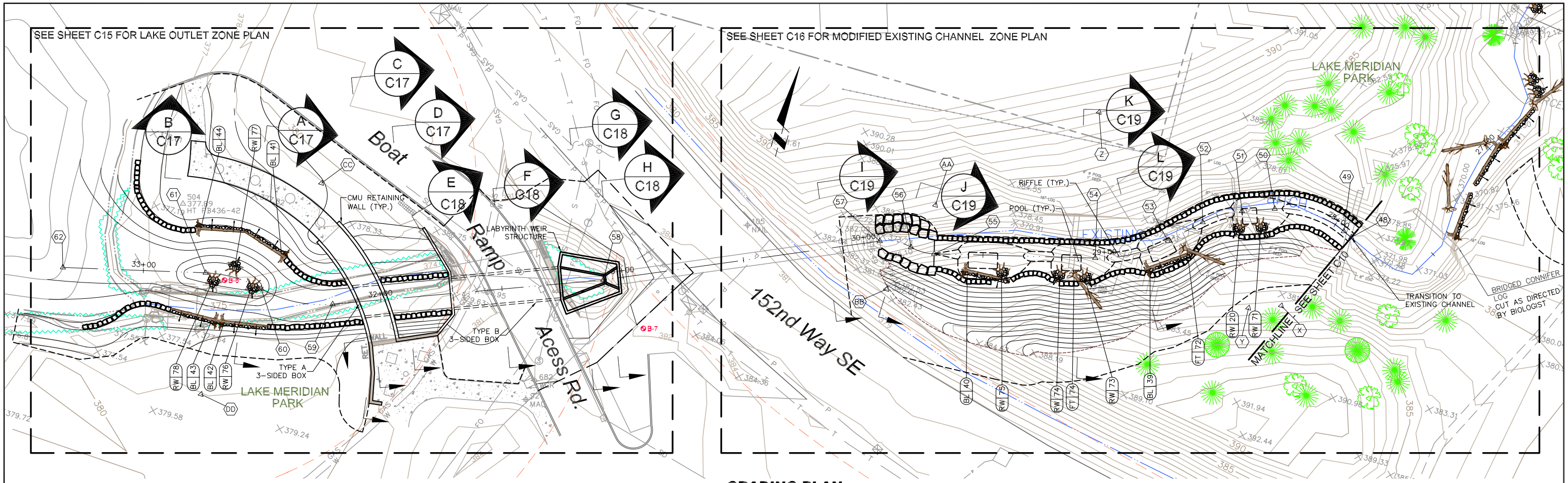

GRADING PLAN
LAKE OUTLET AND MODIFIED EXISTING CHANNEL ZONES

0 20' 40'
SCALE: 1" = 20'

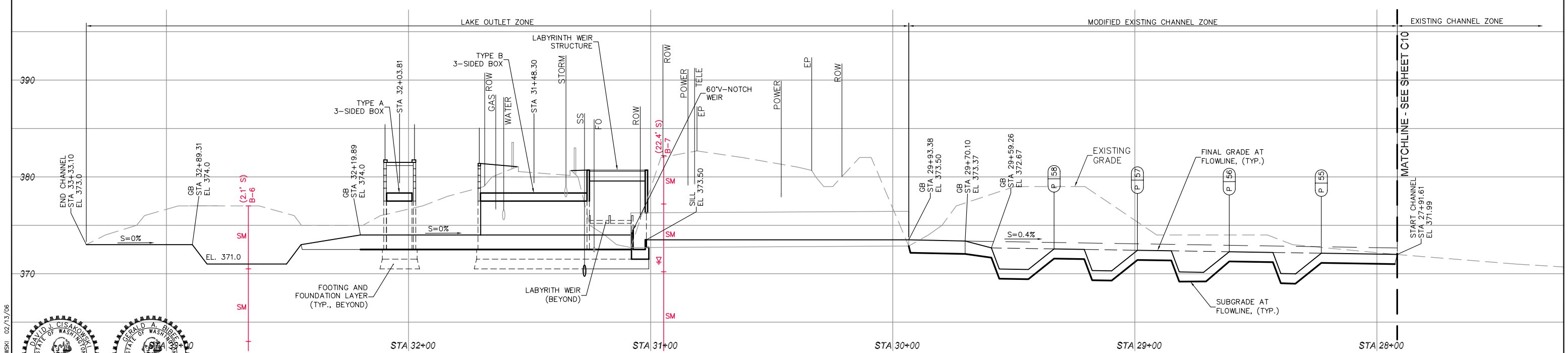

GRADING PROFILE
LAKE OUTLET AND MODIFIED EXISTING CHANNEL ZONES

HORIZONTAL SCALE: 1" = 20'
VERTICAL SCALE: 1" = 5'

DAVID J. CISAKOWSKI, STATE OF WASHINGTON, 30193, REGISTERED PROFESSIONAL ENGINEER — EXPIRES: 6/9/06

GERALD A. BIBER, STATE OF WASHINGTON, 24332, REGISTERED PROFESSIONAL ENGINEER — EXPIRES: 11-03-07

90% Design Review Submittal - Not for Construction

GEO ENGINEERS — The Watershed Company — MONTGOMERY WATER GROUP, INC.

NO.	REVISION	BY	DATE
–	–	–	–

DESIGNED: DJC | CHECKED: GAB | KENT PROJECT NO. –
DRAWN: DJC | PROJ MANGR: GAB | CONST. MGMT. REVIEW –
APPROVED: _____ CITY ENGINEER
SCALE: HORIZ: AS NOTED | VERT: AS NOTED
DATE 02/13/06
BAR IS ONE INCH ON ORIGINAL DRAWING ADJUST SCALES ACCORDINGLY 0" 1"

KENT WASHINGTON — City of Kent Public Works Department Engineering Division

PLAN AND PROFILE
LAKE OUTLET AND
MODIFIED EXISTING CHANNEL ZONES

COW CREEK REALIGNMENT,
LAKE MERIDIAN OUTLET, AND
WETLAND RESTORATION IMPROVEMENTS

SHEET C09 OF 37
FILE NO. –

PLAN AND PROFILE.DWG D CISAKOWSKI 02/13/06

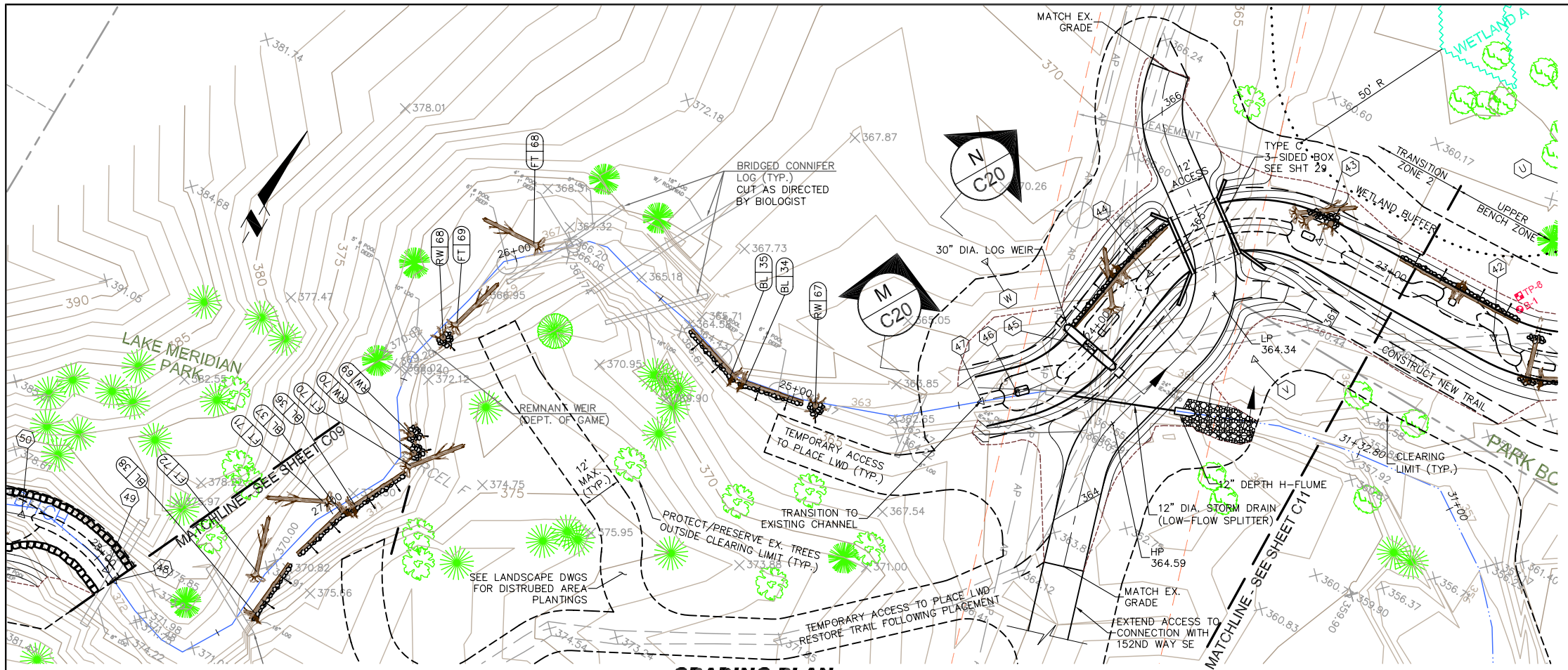

GRADING PLAN
EXISTING CHANNEL ZONE AND TRANSITION ZONE 2

0 20' 40'
SCALE: 1" = 20'

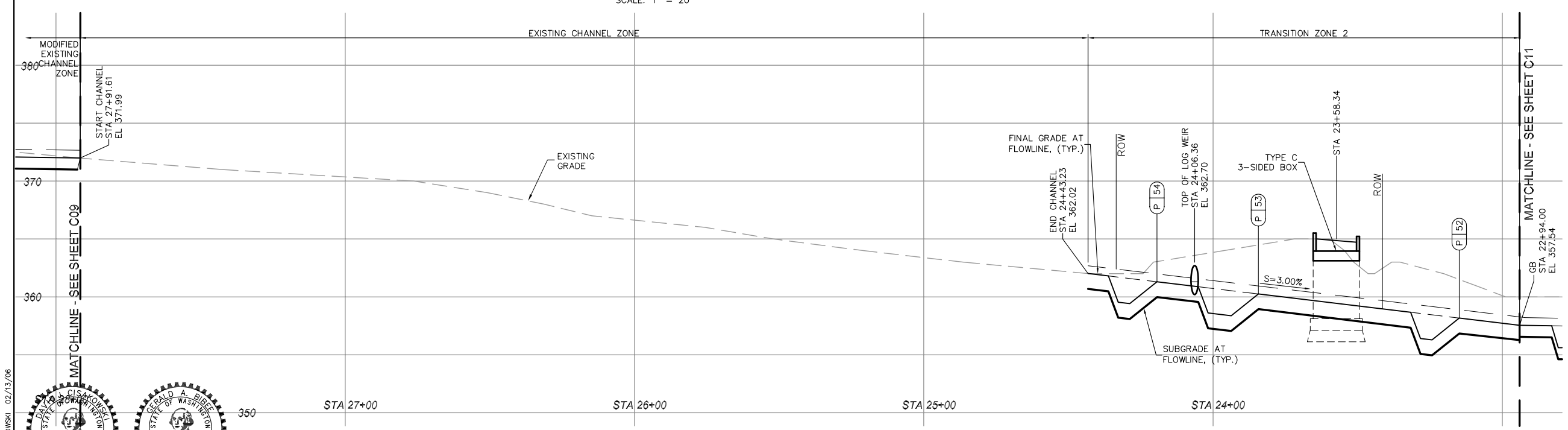

GRADING PROFILE
EXISTING CHANNEL ZONE AND TRANSITION ZONE 2

HORIZONTAL SCALE: 1" = 20'
VERTICAL SCALE: 1" = 5'

STA 28+00

90% Design Review Submittal - Not for Construction

GEO ENGINEERS
The Watershed Company
MONTGOMERY WATER GROUP, INC.

NO.	REVISION	BY	DATE
–	–	–	–

DESIGNED: DJC | CHECKED: GAB | KENT PROJECT NO. –
DRAWN: DJC | PROJ MANGR: GAB | CONST. MGMT. REVIEW –
APPROVED: CITY ENGINEER

SCALE: HORIZ: AS NOTED VERT: AS NOTED
DATE 02/13/06

BAR IS ONE INCH ON ORIGINAL DRAWING ADJUST SCALES ACCORDINGLY
0" 1"

KENT WASHINGTON
City of Kent
Public Works Department
Engineering Division

PLAN AND PROFILE
EXISTING CHANNEL ZONE AND TRASISTION ZONE 2

COW CREEK REALIGNMENT, LAKE MERIDIAN OUTLET, AND WETLAND RESTORATION IMPROVEMENTS

SHEET C10 OF 37
FILE NO. –

PLAN AND PROFILE.DWG D CISAKOWSKI 02/13/06

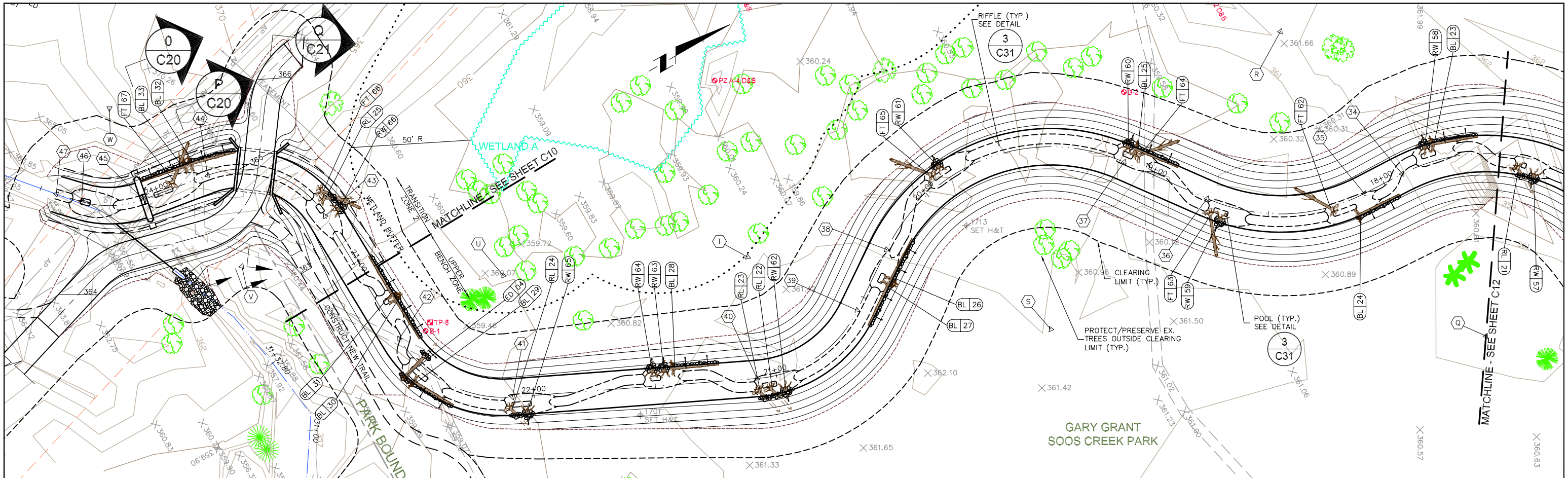

GRADING PLAN
TRANSITION ZONE 2 TO UPPER BENCH ZONE - STA 17+50

0 20' 40'
SCALE: 1" = 20'

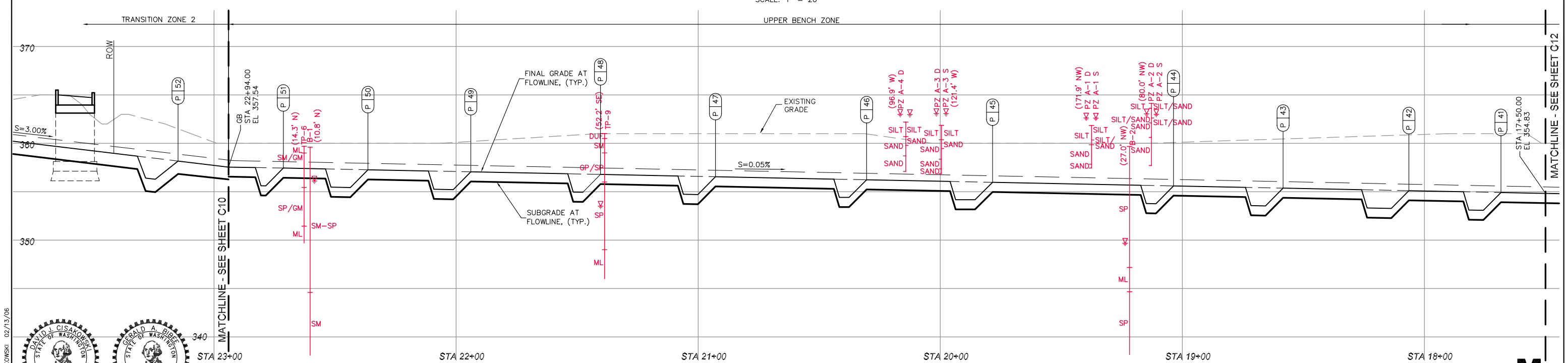

GRADING PROFILE
TRANSITION ZONE 2 TO UPPER BENCH ZONE - STA 17+50

HORIZONTAL SCALE: 1" = 20'
VERTICAL SCALE: 1" = 5'

90% Design Review Submittal - Not for Construction

DAVID J. CISAKOWSKI, STATE OF WASHINGTON, 30193, REGISTERED PROFESSIONAL ENGINEER — EXPIRES: 6/9/06

GERALD A. BIBEAU, STATE OF WASHINGTON, 24332, REGISTERED PROFESSIONAL ENGINEER — EXPIRES: 11-03-07

GEO ENGINEERS — The Watershed Company — MONTGOMERY WATER GROUP, INC.

NO.	REVISION	BY	DATE
–	–	–	–

DESIGNED: DJC | CHECKED: GAB | KENT PROJECT NO. –
DRAWN: DJC | PROJ MANGR: GAB | CONST. MGMT. REVIEW –
APPROVED: _____ CITY ENGINEER
SCALE: HORIZ: AS NOTED | VERT: AS NOTED
DATE 02/13/06
BAR IS ONE INCH ON ORIGINAL DRAWING ADJUST SCALES ACCORDINGLY 0" 1"

KENT WASHINGTON — City of Kent Public Works Department Engineering Division

PLAN AND PROFILE
TRANSITION ZONE 2 AND
UPPER BENCH ZONE

COW CREEK REALIGNMENT,
LAKE MERIDIAN OUTLET, AND
WETLAND RESTORATION IMPROVEMENTS

SHEET C11 OF 37
FILE NO. –

PLAN AND PROFILE.DWG D CISAKOWSKI 02/13/06

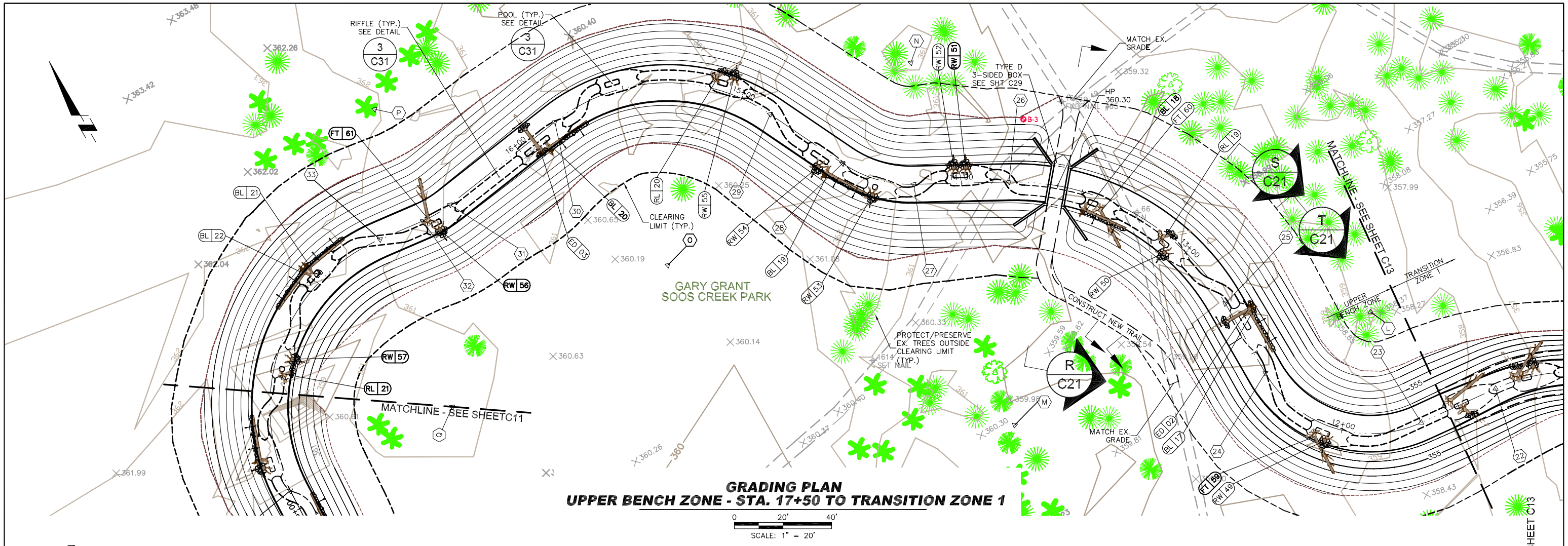

GRADING PLAN
UPPER BENCH ZONE - STA. 17+50 TO TRANSITION ZONE 1

0 20' 40'
SCALE: 1" = 20'

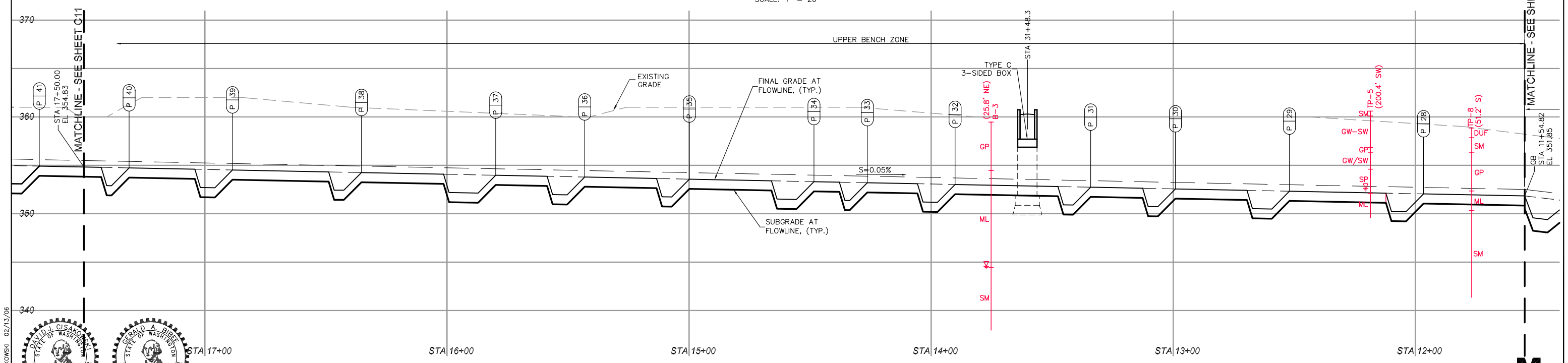

GRADING PROFILE
UPPER BENCH ZONE - STA. 17+50 TO TRANSITION ZONE 1

HORIZONTAL SCALE: 1" = 20'
VERTICAL SCALE: 1" = 5'

DAVID J. CISAKOWSKI STATE OF WASHINGTON 30193 REGISTERED PROFESSIONAL ENGINEER -06 EXPIRES: 6/9/06

GERALD A. BIBLE STATE OF WASHINGTON 24332 REGISTERED PROFESSIONAL ENGINEER -06 EXPIRES: 11-03-07

90% Design Review Submittal - Not for Construction

GEO ENGINEERS | The Watershed Company | MONTGOMERY WATER GROUP, INC.

NO.	REVISION	BY	DATE
–	–	–	–

DESIGNED: DJC | CHECKED: GAB | KENT PROJECT NO. –
DRAWN: DJC | PROJ MANGR: GAB | CONST. MGMT. REVIEW –
APPROVED: _____ CITY ENGINEER | DATE 02/13/06

SCALE: HORIZ: AS NOTED VERT: AS NOTED

BAR IS ONE INCH ON ORIGINAL DRAWING ADJUST SCALES ACCORDINGLY 0" 1"

KENT WASHINGTON
City of Kent
Public Works Department
Engineering Division

PLAN AND PROFILE
UPPER BENCH ZONE TO
TRANSITION ZONE 1

COW CREEK REALIGNMENT,
LAKE MERIDIAN OUTLET, AND
WETLAND RESTORATION IMPROVEMENTS

SHEET C12 OF 37
FILE NO. –

PLAN AND PROFILE.DWG D CISAKOWSKI 02/13/06

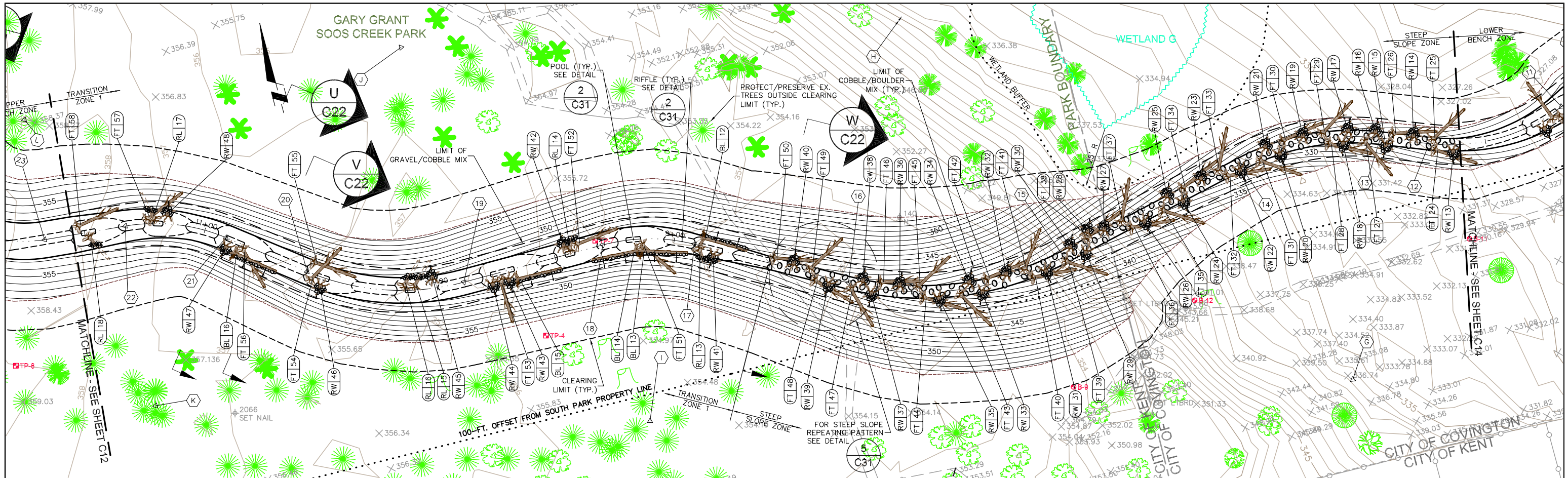

GRADING PLAN
TRANSITION ZONE 1 AND STEEP SLOPE ZONES

0 20' 40'
SCALE: 1" = 20'

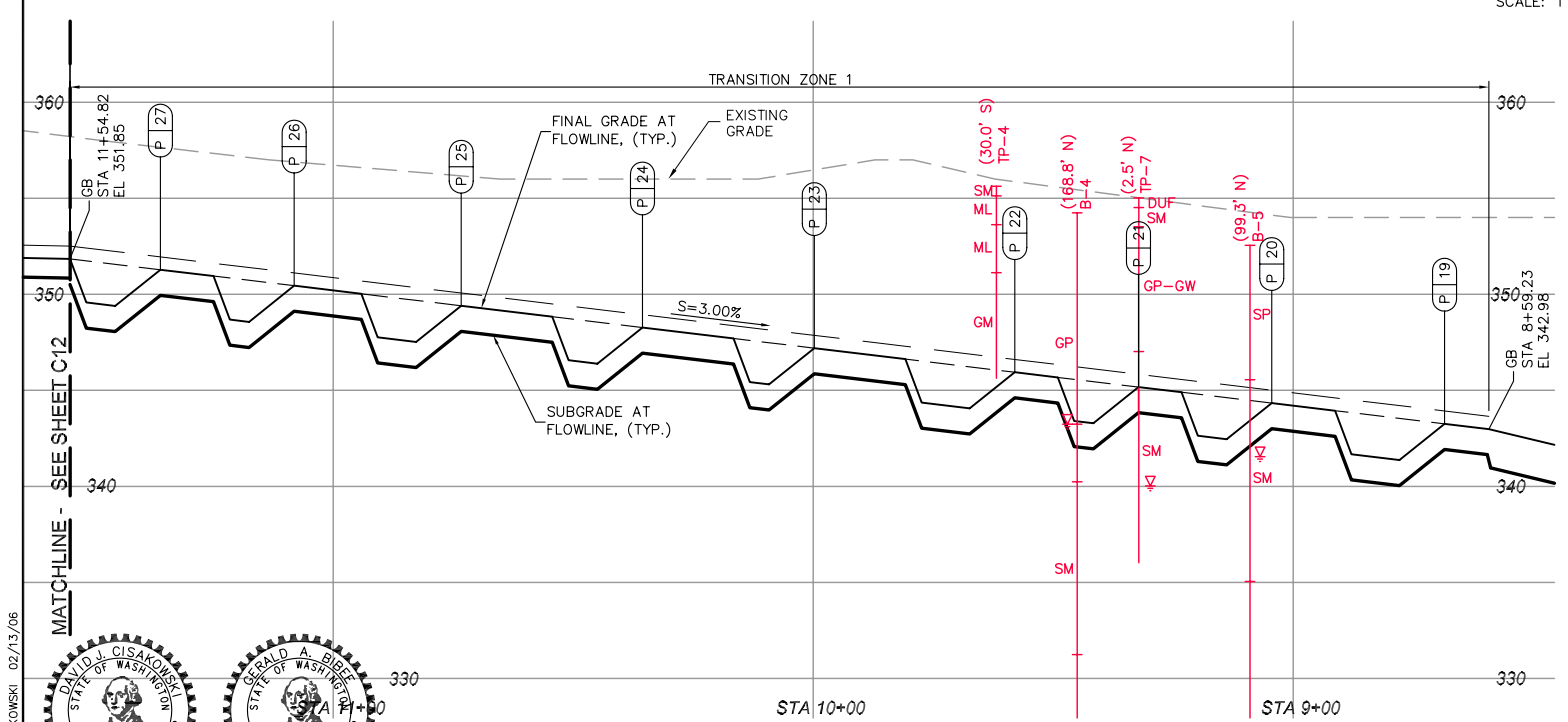

GRADING PROFILE
TRANSITION ZONE 1

HORIZONTAL SCALE: 1" = 20'
VERTICAL SCALE: 1" = 5'

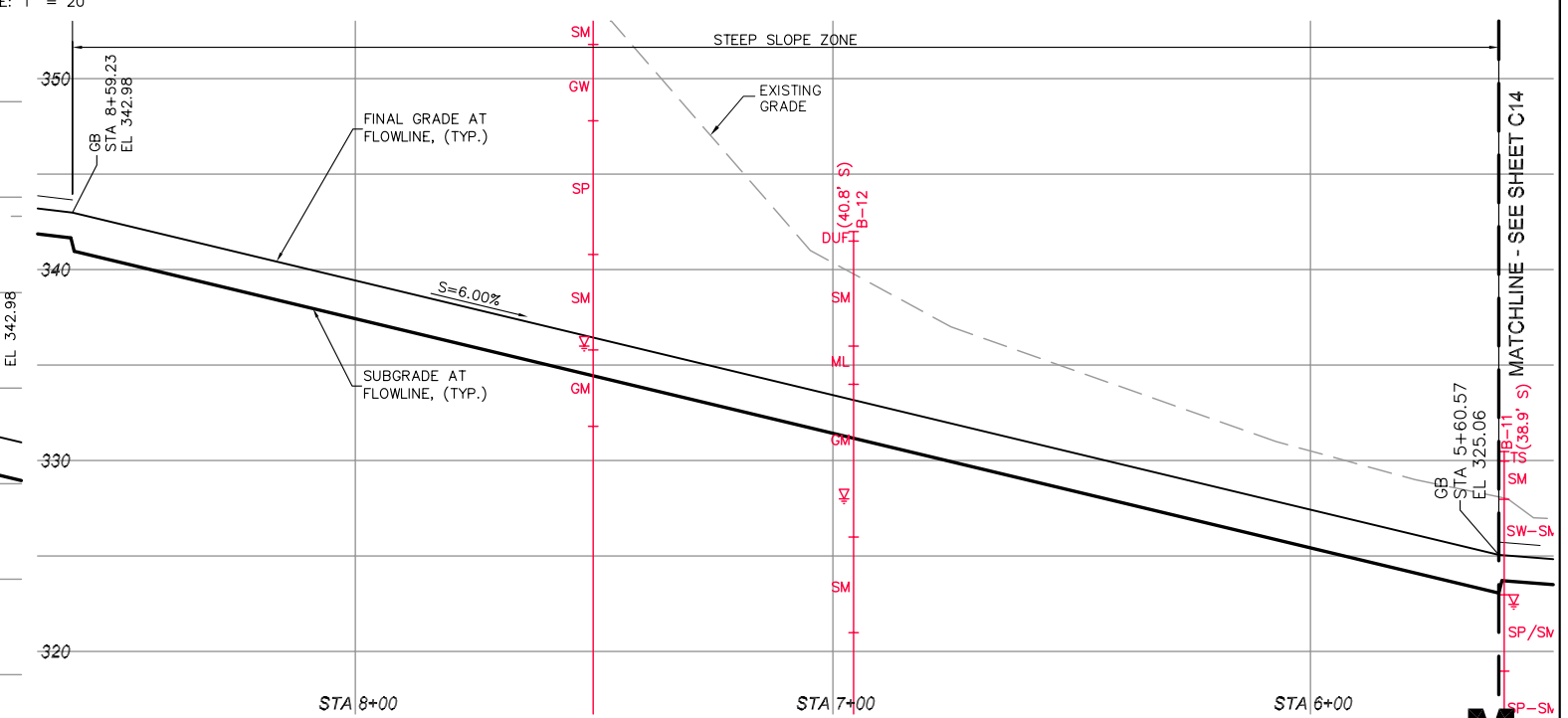

GRADING PROFILE
STEEP SLOPE ZONE

HORIZONTAL SCALE: 1" = 20'
VERTICAL SCALE: 1" = 5'

90% Design Review Submittal - Not for Construction

DAVID J. CISAKOWSKI — STATE OF WASHINGTON — 30193 — REGISTERED PROFESSIONAL ENGINEER — EXPIRES: 6/9/06

GERALD A. BOGA — STATE OF WASHINGTON — 24332 — REGISTERED PROFESSIONAL ENGINEER — EXPIRES: 11-03-07

GEO ENGINEERS
The Watershed Company
MONTGOMERY WATER GROUP, INC.

NO.	REVISION	BY	DATE
–	–	–	–

DESIGNED: DJC | CHECKED: GAB | KENT PROJECT NO. –
DRAWN: DJC | PROJ MANGR: GAB | CONST. MGMT. REVIEW –
APPROVED: _____ CITY ENGINEER
SCALE: HORIZ: AS NOTED VERT: AS NOTED
DATE 02/13/06
BAR IS ONE INCH ON ORIGINAL DRAWING ADJUST SCALES ACCORDINGLY 0" 1"

KENT WASHINGTON
City of Kent
Public Works Department
Engineering Division

PLAN AND PROFILE
TRANSITION ZONE 1 AND
STEEP SLOPE ZONE

COW CREEK REALIGNMENT,
LAKE MERIDIAN OUTLET, AND
WETLAND RESTORATION IMPROVEMENTS

SHEET C13 OF 37
FILE NO. –

PLAN AND PROFILE.DWG D CISAKOWSKI 02/13/06

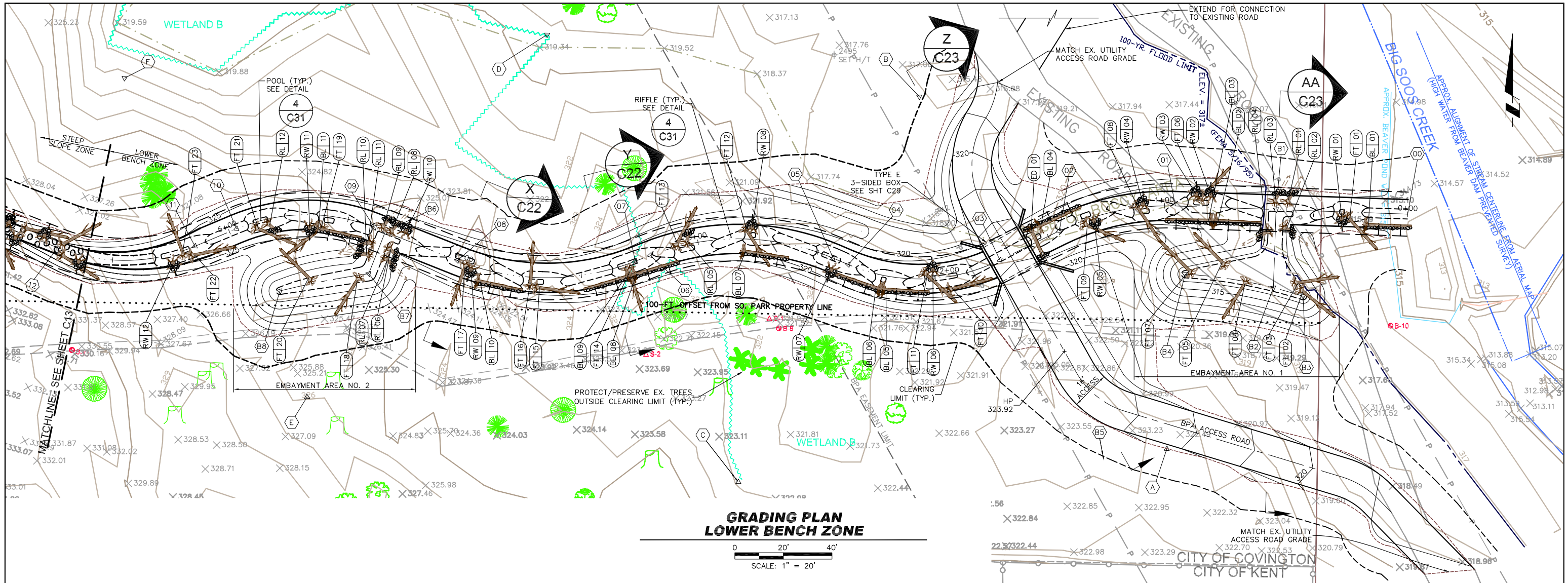

GRADING PLAN
LOWER BENCH ZONE

0 20' 40'
SCALE: 1" = 20'

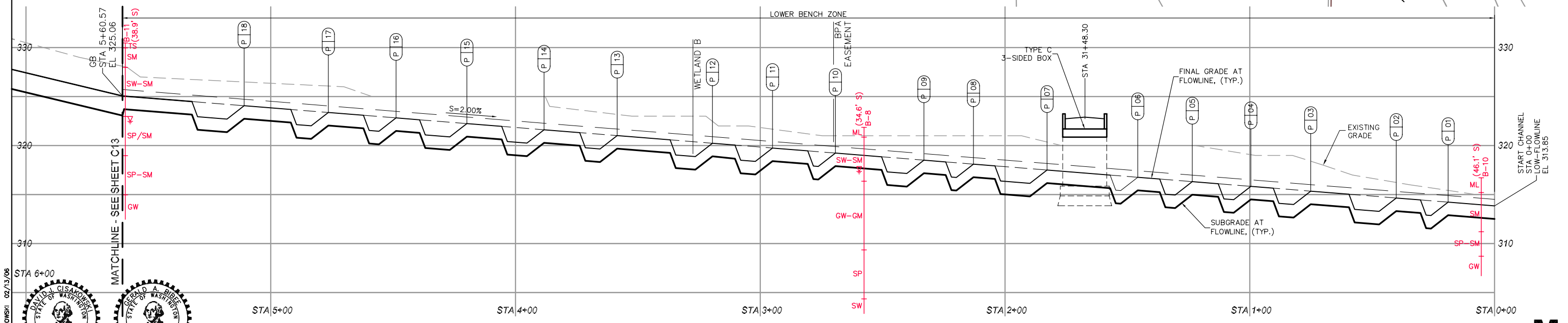

GRADING PROFILE
LOWER BENCH ZONE

HORIZONTAL SCALE: 1" = 20'
VERTICAL SCALE: 1" = 5'

DAVID J. CISAKOWSKI — STATE OF WASHINGTON — 30193 — REGISTERED PROFESSIONAL ENGINEER — EXPIRES: 6/9/06

GERALD A. BIBER — STATE OF WASHINGTON — 24332 — REGISTERED PROFESSIONAL ENGINEER — EXPIRES: 11-03-07

90% Design Review Submittal - Not for Construction

GEO ENGINEERS — The Watershed Company — MONTGOMERY WATER GROUP, INC.

NO.	REVISION	BY	DATE
–	–	–	–

DESIGNED: DJC | CHECKED: GAB | KENT PROJECT NO. –
DRAWN: DJC | PROJ MANGR: GAB | CONST. MGMT. REVIEW –
APPROVED: _____ CITY ENGINEER
SCALE: HORIZ: AS NOTED | VERT: AS NOTED
DATE 02/13/06
BAR IS ONE INCH ON ORIGINAL DRAWING ADJUST SCALES ACCORDINGLY 0" 1"

KENT WASHINGTON — City of Kent Public Works Department Engineering Division

PLAN AND PROFILE
LOWER BENCH ZONE

COW CREEK REALIGNMENT, LAKE MERIDIAN OUTLET, AND WETLAND RESTORATION IMPROVEMENTS

SHEET C14 OF 37
FILE NO. –

PLAN AND PROFILE.DWG D CISAKOWSKI 02/13/06

NOTES:

1. SALVAGE ROCK FROM EXISTING ROCKERY FOR USE AS 3-MAN ROCK.
2. SAWCUT LINE SHOWN IS BASED ON A 1:1 EXCAVATION SLOPE AND A 5' BUFFER. ACTUAL LOCATION OF THE PAVEMENT CUT LINE WILL DEPEND ON SOIL CONDITIONS ENCOUNTERED IN THE FIELD AND THE TRAFFIC CONTROL PLAN EMPLOYED BY THE CONTRACTOR.
3. REMOVE AND SALVAGE EXISTING FOOTBRIDGE AND PLAQUE IN UNDAMAGED CONDITION; DELIVER TO CITY FOR RE-USE.
4. SEE LANDSCAPE DRAWINGS FOR LAKE MERIDIAN PARK PLANTINGS RESTORATION.
5. PROTECT AND COORDINATE RELOCATION OF EXISTING FRANCHISE UTILITIES WITH THE CITY.
6. PRIOR TO COMMENCEMENT OF EARTHWORK, ENSURE ALL IRRIGATION SYSTEM COMPONENTS HAVE BEEN MARKED, SHUT DOWN, AND CAPPED WITHIN THE WORK AREA BY CITY FORCES.
7. FOR LWD PLACEMENT SEE SHEET C09.

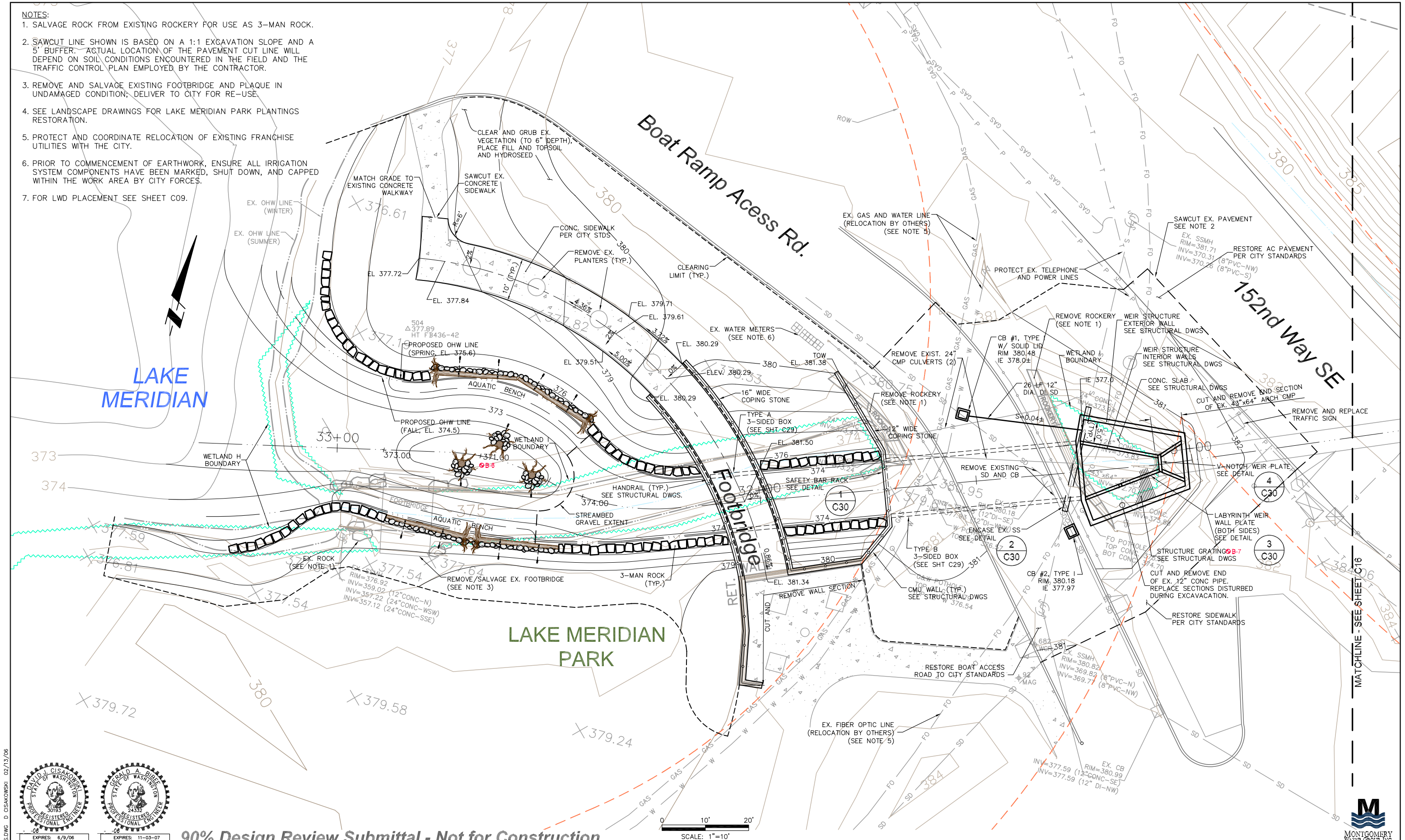

DAVID J. CISAKOWSKI STATE OF WASHINGTON 30193 REGISTERED PROFESSIONAL ENGINEER EXPIRES: 6/9/06

GERALD A. BIBBE STATE OF WASHINGTON 24332 REGISTERED PROFESSIONAL ENGINEER EXPIRES: 11-03-07

90% Design Review Submittal - Not for Construction

NO.	REVISION	BY	DATE
–	–	–	–

DESIGNED: DJC | CHECKED: GAB | KENT PROJECT NO. – | SCALE: HORIZ: AS NOTED
DRAWN: DJC | PROJ MANGR: GAB | CONST. MGMT. REVIEW – | VERT: AS NOTED
APPROVED: _____ CITY ENGINEER | DATE 02/13/06

BAR IS ONE INCH ON ORIGINAL DRAWING ADJUST SCALES ACCORDINGLY 0" 1"

KENT WASHINGTON
City of Kent
Public Works Department
Engineering Division

LAKE OUTLET ZONE PLAN

COW CREEK REALIGNMENT, LAKE MERIDIAN OUTLET, AND WETLAND RESTORATION IMPROVEMENTS

SHEET C15 OF 37
FILE NO. –

MONTGOMERY WATER GROUP, INC.

LAKE OUTLET PLANS.DWG D CISAKOWSKI 02/13/06

NOTES:
1. FOR POOL AND LWD PLACEMENT SEE SHEET C09.

LAKE MERIDIAN PARK

152nd Way SE

MATCHLINE - SEE SHEET C15

6' FENCE

43"x64" ACMP INV=372.86

FILL ENTIRE LENGTH OF EX. 43"x64" ACMP WITH GRAVEL/COBBLE MIX TO EL. 373.50

GRAVEL/COBBLE MIX STREAMBED GRAVEL

5-MAN ROCK (TYP.)

3-MAN ROCK (TYP.)

RIFFLE (TYP.) SEE DETAIL 1 C31

16" LOG

6' Ø POOL 1' DEEP

POOL (TYP.) SEE DETAIL 1 C31

6" LOG

8" LOG

AQUATIC BENCH (TYP.)

4' Ø POOL 1' DEEP

TRANSISTION GRADING TO MATCH EXISTING STEAM CHANNEL

SEE LANDSCAPE DWGS FOR SLOPE PLANTINGS RESTORATION

EDGE OF ASPHALT

ROW

RESTORE DITCH TO MATCH EXISTING AND HYDROSEED

CLEARING LIMIT (TYP.)

PROTECT/PRESERVE EX. TREES OUTSIDE CLEARING LIMIT (TYP.)

SCALE: 1"=10'

DAVID J. CISAKOWSKI STATE OF WASHINGTON 30193 REGISTERED PROFESSIONAL ENGINEER
EXPIRES: 6/9/06

GERALD A. BIBBE STATE OF WASHINGTON 24332 REGISTERED PROFESSIONAL ENGINEER
EXPIRES: 11-03-07

90% Design Review Submittal - Not for Construction

MONTGOMERY WATER GROUP, INC.

NO.	REVISION	BY	DATE
–	–	–	–

DESIGNED: DJC | CHECKED: GAB | KENT PROJECT NO. –
DRAWN: DJC | PROJ MANGR: GAB | CONST. MGMT. REVIEW –
APPROVED: _____ CITY ENGINEER

SCALE: HORIZ: AS NOTED VERT: AS NOTED
DATE 02/13/06

BAR IS ONE INCH ON ORIGINAL DRAWING ADJUST SCALES ACCORDINGLY 0" 1"

KENT WASHINGTON
City of Kent
Public Works Department
Engineering Division

MODIFIED EXISTING CHANNEL ZONE PLAN

COW CREEK REALIGNMENT, LAKE MERIDIAN OUTLET, AND WETLAND RESTORATION IMPROVEMENTS

SHEET C16 OF 37

FILE NO. –

LAKE OUTLET PLANS.DWG D CISAKOWSKI 02/13/06

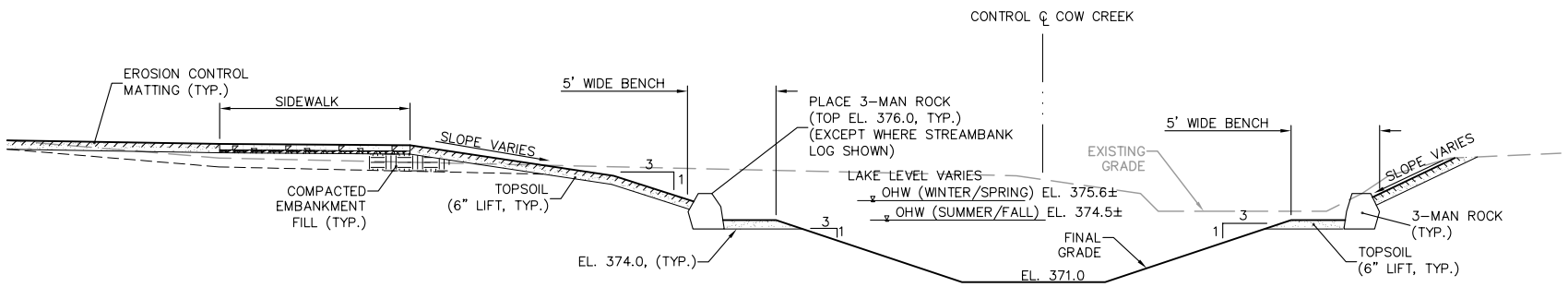

UPSTREAM OF PROPOSED FOOTBRIDGE CROSS-SECTION

A / C09

0 5' 10'
SCALE: 1"=5'

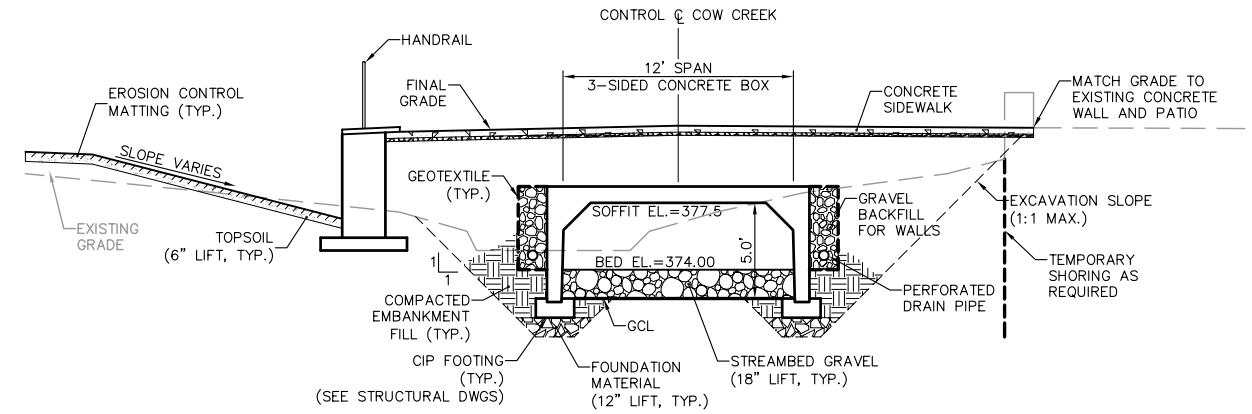

FOOTBRIDGE 3-SIDED BOX TYPE A CROSS-SECTION

C / C09

0 5' 10'
SCALE: 1"=5'

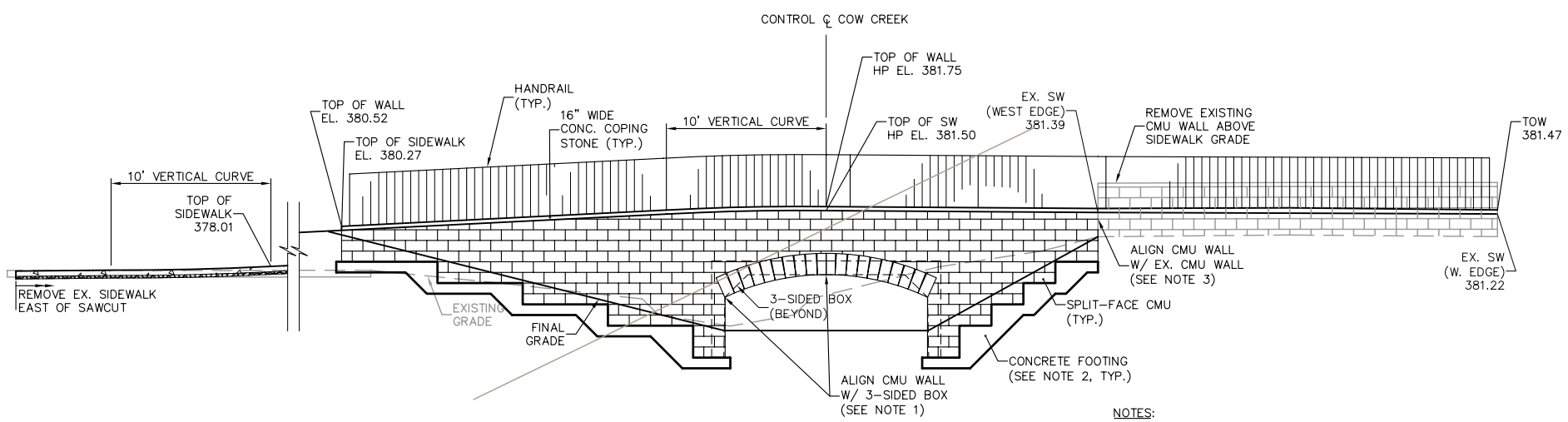

FOOTBRIDGE WEST ELEVATION

B / C09

0 5' 10'
SCALE: 1"=5'

NOTES:

1. ALIGN THE TOP OF THE SEGMENTAL ARCH SOFFIT W/ THE 3-SIDED BOX SOFFIT. ALIGN THE BOTTOM THE SEGMENTAL ARCH W/ THE BOTTOM OF THE 3-SIDED BOX CORBEL.
2. FOR FOUNDATION DEPTH/STEPS, REFER TO STRUCTURAL DRAWINGS.
3. VERTICALLY ALIGN NEW CMU WALL COURSING W/ EX. CMU WALL COURSING. MATE HALF NEW BLOCKS WITH EX. HALF BLOCKS AND MATE FULL BLOCKS W/ EXISTING FULL BLOCKS.

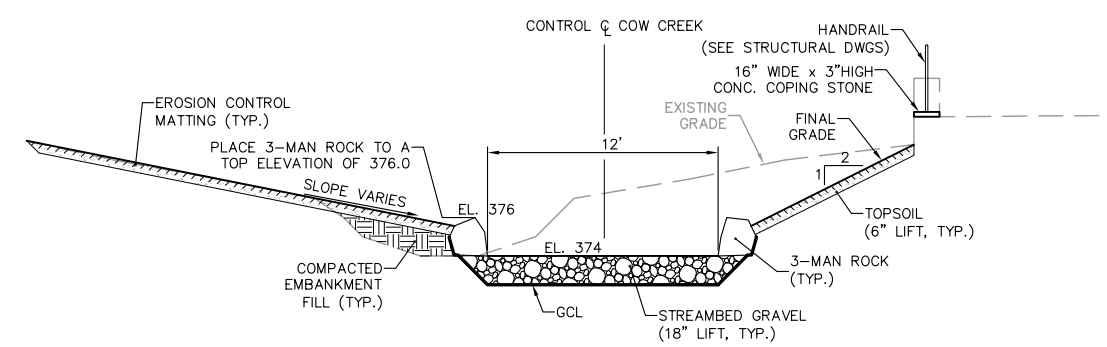

UPSTREAM OF BOAT RAMP ACCESS ROAD CROSS-SECTION

D / C09

0 5' 10'
SCALE: 1"=5'

LAKE OUTLET SECTIONS D CISAKOWSKI 02/13/06

DAVID J. CISAKOWSKI STATE OF WASHINGTON 30193 REGISTERED PROFESSIONAL ENGINEER - 06 EXPIRES: 6/9/06

GERALD A. BIBLE STATE OF WASHINGTON 24332 REGISTERED PROFESSIONAL ENGINEER - 06 EXPIRES: 11-03-07

90% Design Review Submittal - Not for Construction

NO.	REVISION	BY	DATE
–	–	–	–

DESIGNED: DJC | CHECKED: GAB | KENT PROJECT NO. –
DRAWN: DJC | PROJ MANGR: GAB | CONST. MGMT. REVIEW –
APPROVED: _____ CITY ENGINEER

SCALE: HORIZ: AS NOTED VERT: AS NOTED
DATE 02/13/06
BAR IS ONE INCH ON ORIGINAL DRAWING ADJUST SCALES ACCORDINGLY 0" 1"

KENT WASHINGTON
City of Kent
Public Works Department
Engineering Division

CHANNEL SECTIONS

COW CREEK REALIGNMENT, LAKE MERIDIAN OUTLET, AND WETLAND RESTORATION IMPROVEMENTS

MONTGOMERY WATER GROUP, INC. KIRKLAND, WA Olympia, WA

SHEET C17 OF 37
– –

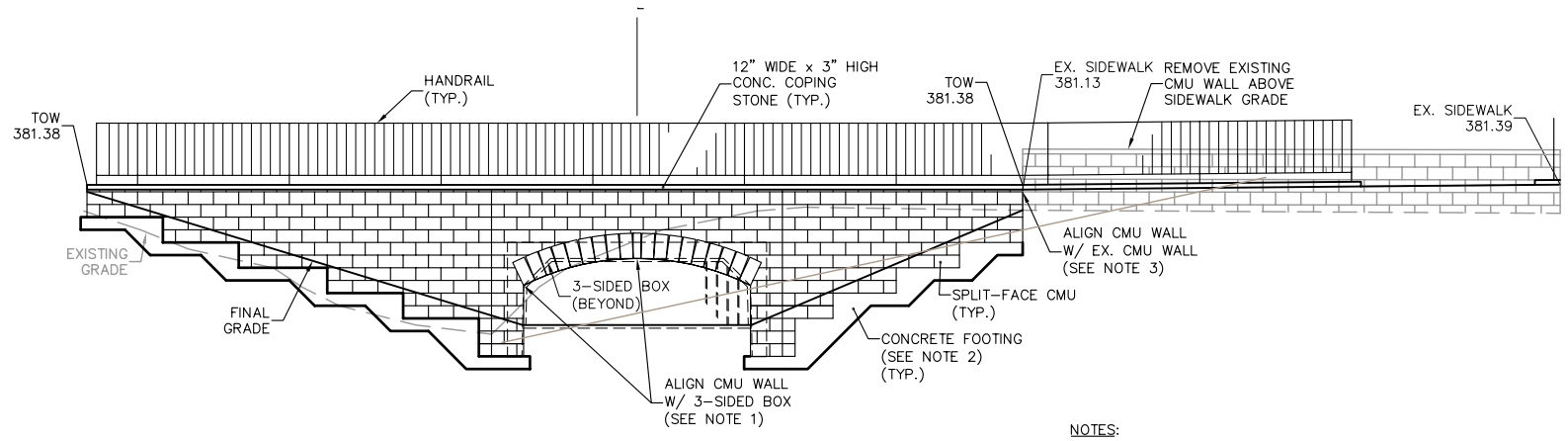

NOTES:

1. ALIGN THE TOP OF THE SEGMENTAL ARCH SOFFIT W/ THE 3-SIDED BOX SOFFIT. ALIGN THE BOTTOM THE SEGMENTAL ARCH W/ THE BOTTOM OF THE 3-SIDED BOX CORBEL.
2. FOR FOUNDATION DEPTH/STEPS, REFER TO STRUCTURAL DRAWINGS.
3. VERTICALLY ALIGN NEW CMU WALL COURSING W/ EX. CMU WALL COURSING. MATE HALF NEW BLOCKS WITH EX. HALF BLOCKS AND MATE FULL BLOCKS W/ EXISTING FULL BLOCKS.

BOAT RAMP ACCESS ROAD WEST ELEVATION

E / C09

0 5' 10'
SCALE: 1"=5'

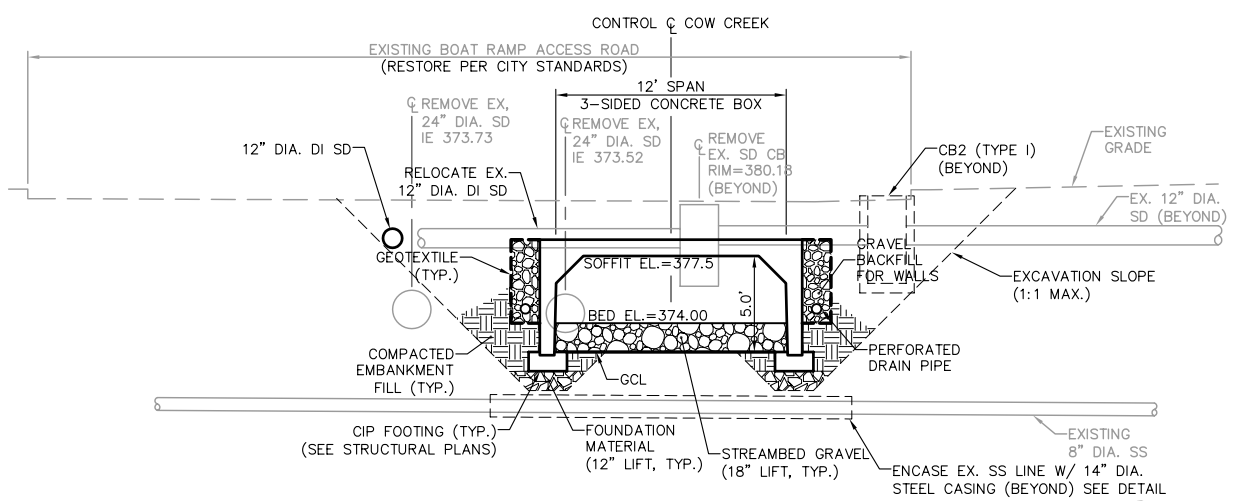

BOAT RAMP ACCESS ROAD 3-SIDED BOX TYPE B CROSS-SECTION

F / C09

2 / C30

0 5' 10'
SCALE: 1"=5'

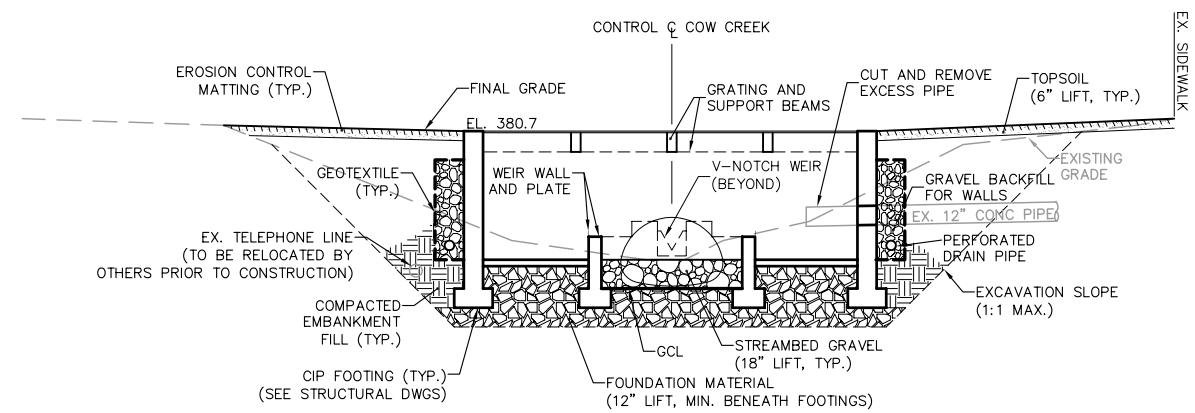

LABYRINTH WEIR STRUCTURE CROSS-SECTION

G / C09

0 5' 10'
SCALE: 1"=5'

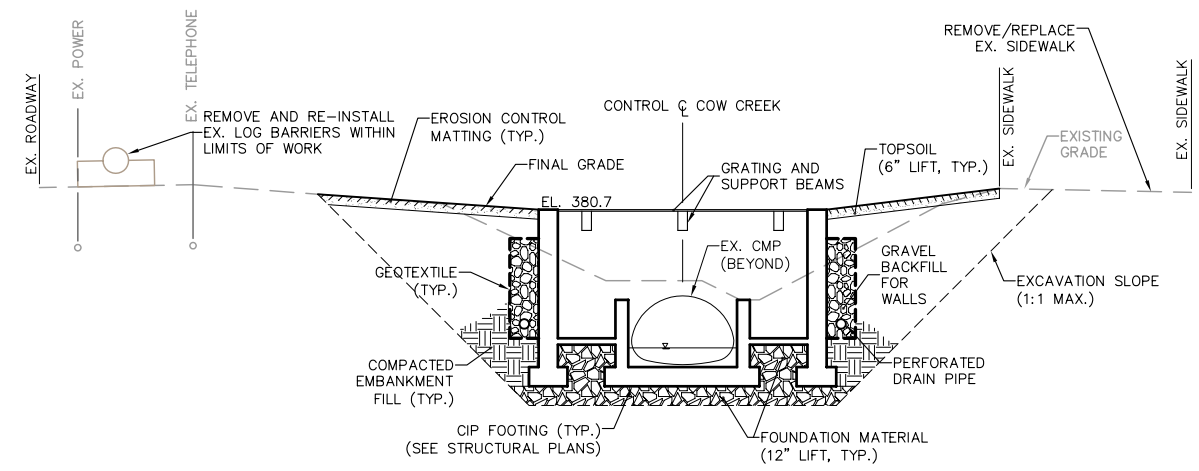

LABYRINTH WEIR STRUCTURE CROSS-SECTION

H / C09

0 5' 10'
SCALE: 1"=5'

DAVID J. CISAKOWSKI STATE OF WASHINGTON 30193 REGISTERED PROFESSIONAL ENGINEER
EXPIRES: 6/9/06

GERALD A. BIBLE STATE OF WASHINGTON 24332 REGISTERED PROFESSIONAL ENGINEER
EXPIRES: 11-03-07

90% Design Review Submittal - Not for Construction

NO.	REVISION	BY	DATE
–	–	–	–

DESIGNED: DJC | CHECKED: GAB | KENT PROJECT NO. –
DRAWN: DJC | PROJ MANGR: GAB | CONST. MGMT. REVIEW –
APPROVED: _____ CITY ENGINEER

SCALE: HORIZ: AS NOTED VERT: AS NOTED
DATE 02/13/06

BAR IS ONE INCH ON ORIGINAL DRAWING ADJUST SCALES ACCORDINGLY
0" 1"

KENT WASHINGTON
City of Kent
Public Works Department
Engineering Division

CHANNEL SECTIONS

COW CREEK REALIGNMENT,
LAKE MERIDIAN OUTLET, AND
WETLAND RESTORATION IMPROVEMENTS

SHEET C18 OF 37

MONTGOMERY WATER GROUP, INC.

LAKE OUTLET SECTIONS D. CISAKOWSKI 02/13/06

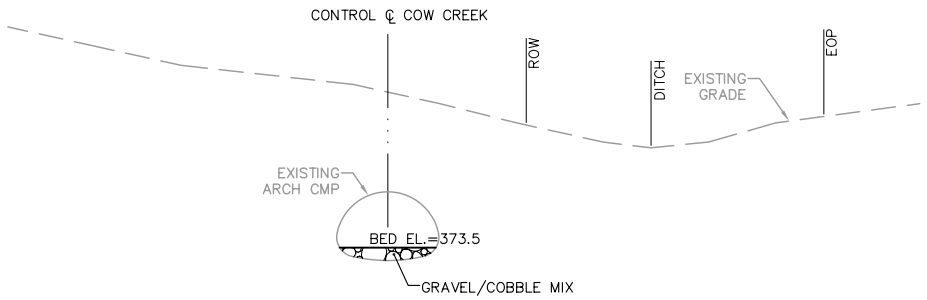

MODIFED EXISTING CHANNEL ARCH CMP CROSS-SECTION

I / C09

0 5' 10'
SCALE: 1"=5'

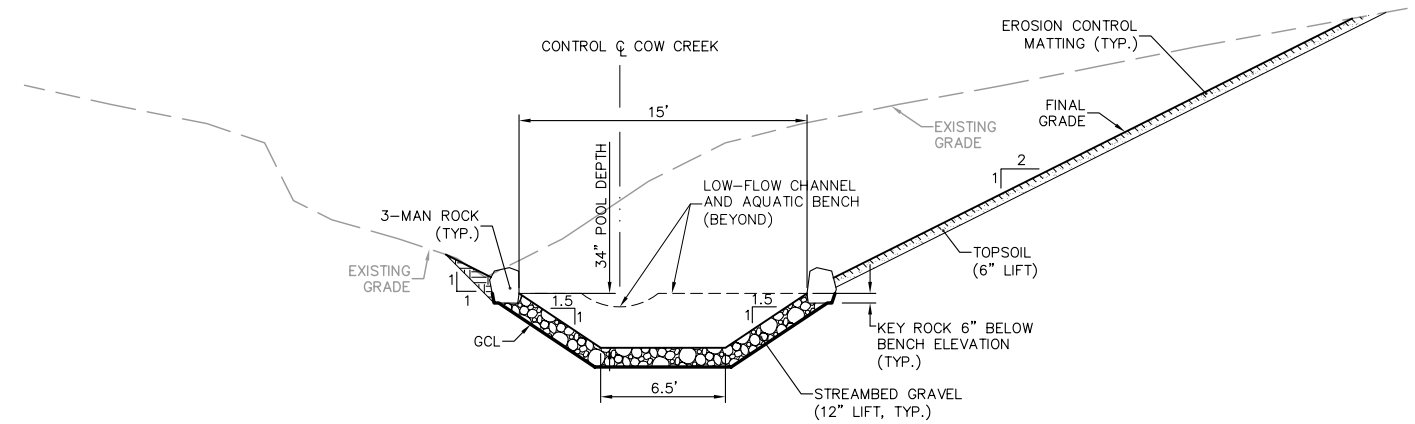

MODIFIED EXISTING CHANNEL POOL CROSS-SECTION

K / C09

0 5' 10'
SCALE: 1"=5'

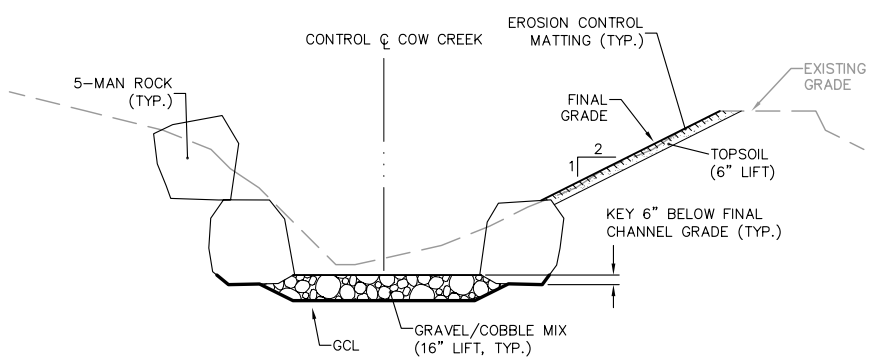

MODIFED EXISTING CHANNEL ARCH CMP OUTLET CROSS-SECTION

J / C09

0 5' 10'
SCALE: 1"=5'

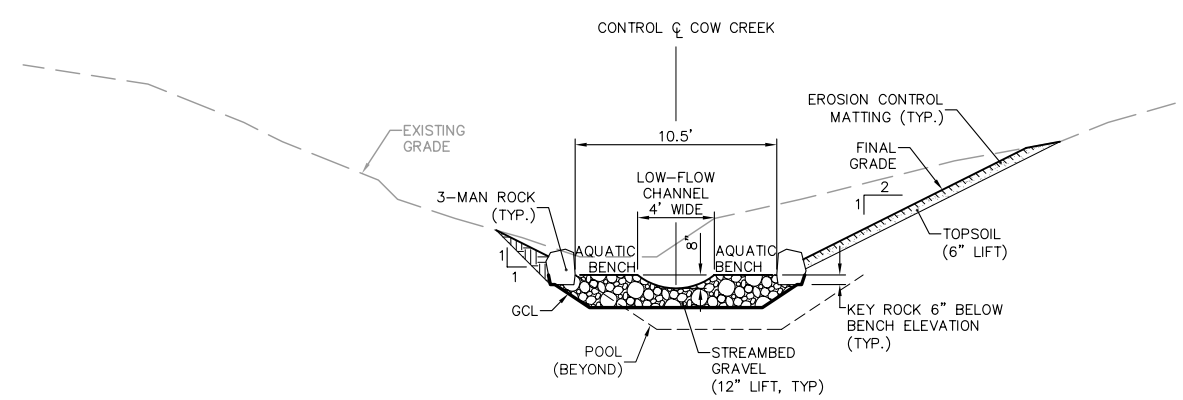

MODIFIED EXISTING CHANNEL RIFFLE CROSS-SECTION

L / C09

0 5' 10'
SCALE: 1"=5'

LAKE OUTLET SECTIONS D CISAKOWSKI 02/13/06

DAVID J. CISAKOWSKI — STATE OF WASHINGTON — 30193 — REGISTERED PROFESSIONAL ENGINEER — EXPIRES: 6/9/06

GERALD A. BIBBLE — STATE OF WASHINGTON — 24322 — REGISTERED PROFESSIONAL ENGINEER — EXPIRES: 11-03-07

90% Design Review Submittal - Not for Construction

NO.	REVISION	BY	DATE
–	–	–	–

DESIGNED: DJC | CHECKED: GAB | KENT PROJECT NO. –
DRAWN: DJC | PROJ MANGR: GAB | CONST. MGMT. REVIEW –
APPROVED: _____ CITY ENGINEER | DATE 02/13/06

SCALE: HORIZ: AS NOTED VERT: AS NOTED

BAR IS ONE INCH ON ORIGINAL DRAWING ADJUST SCALES ACCORDINGLY 0" 1"

KENT WASHINGTON — City of Kent Public Works Department Engineering Division

CHANNEL SECTIONS

COW CREEK REALIGNMENT, LAKE MERIDIAN OUTLET, AND WETLAND RESTORATION IMPROVEMENTS

MONTGOMERY WATER GROUP, INC.

SHEET C19 OF 37
– –

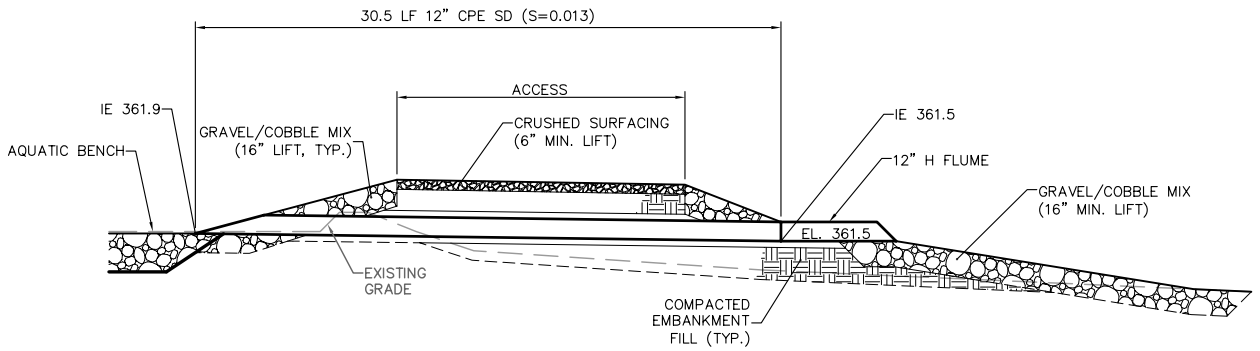

LOW-FLOW SPLITTER TO EXIST. CHANNEL PROFILE

M / C10

0 5' 10'
SCALE: 1"=5'

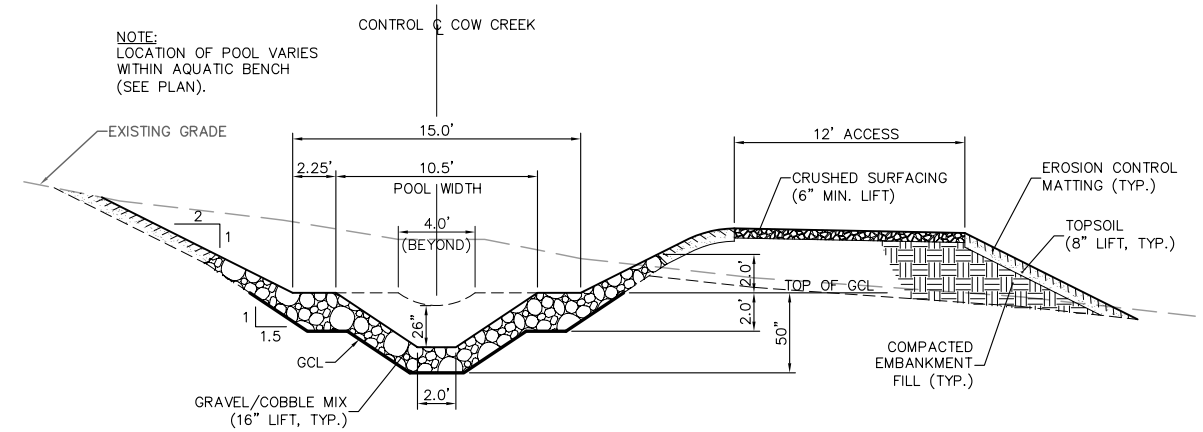

TRANSITION ZONE 2 CROSS-SECTION AT POOL

0 / C11

0 5' 10'
SCALE: 1"=5'

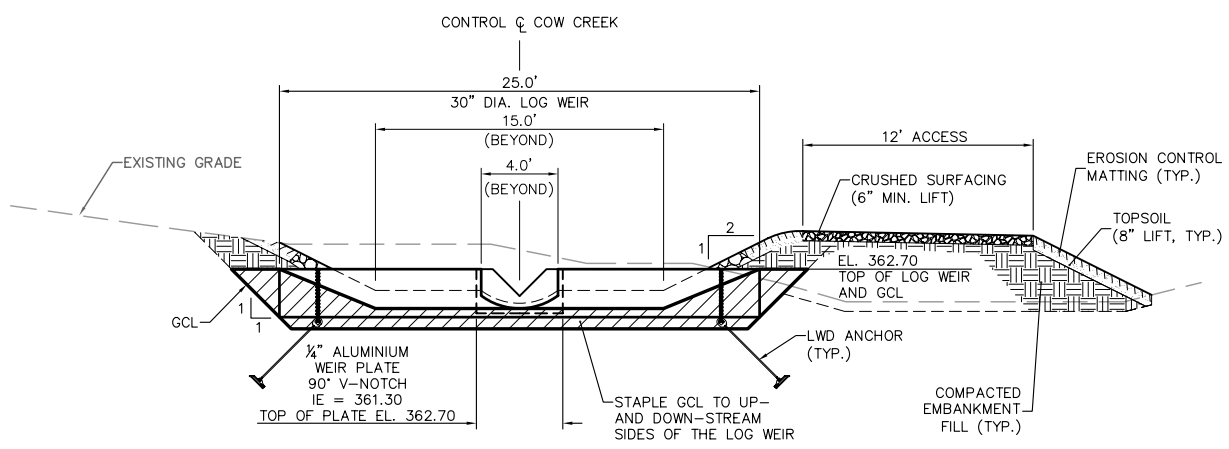

LOG WEIR CROSS-SECTION

N / C10

0 5' 10'
SCALE: 1"=5'

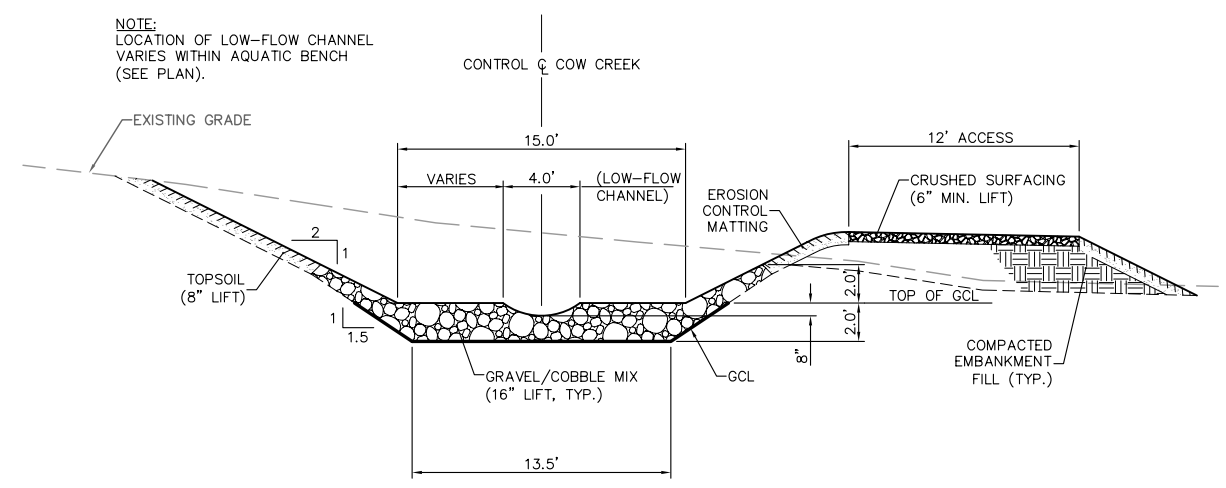

TRANSITION ZONE 2 CROSS-SECTION AT RIFFLE

P / C11

0 5' 10'
SCALE: 1"=5'

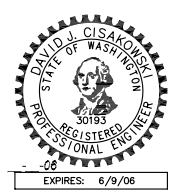

EXPIRES: 6/9/06

EXPIRES: 11-03-07

90% Design Review Submittal - Not for Construction

NO.	REVISION	BY	DATE
–	–	–	–

DESIGNED: DJC | CHECKED: GAB | KENT PROJECT NO. –
DRAWN: DJC | PROJ MANGR: GAB | CONST. MGMT. REVIEW –
APPROVED: _____ CITY ENGINEER

SCALE: HORIZ: AS NOTED | VERT: AS NOTED
DATE 02/13/06

BAR IS ONE INCH ON ORIGINAL DRAWING ADJUST SCALES ACCORDINGLY
0" 1"

City of Kent
Public Works Department
Engineering Division

CHANNEL SECTIONS

COW CREEK REALIGNMENT,
LAKE MERIDIAN OUTLET, AND
WETLAND RESTORATION IMPROVEMENTS

SHEET C20 OF 37
FILE NO. –

MONTGOMERY WATER GROUP, INC.

SECTIONS D CISAKOWSKI 02/13/06

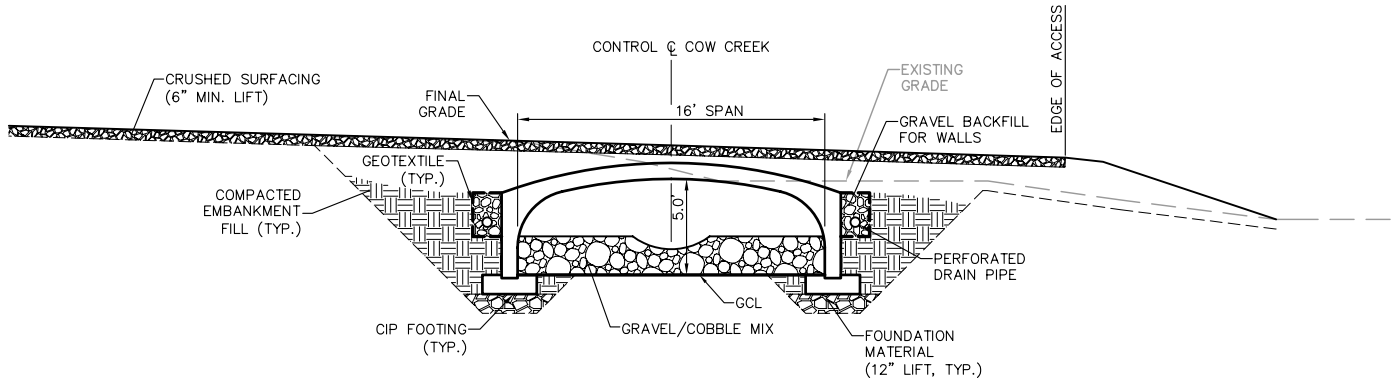

PSE UTILITY ACCESS/FOOTBRIDGE - TYPE C 3-SIDED BOX CROSS-SECTION

Q / C11

0 5' 10'
SCALE: 1"=5'

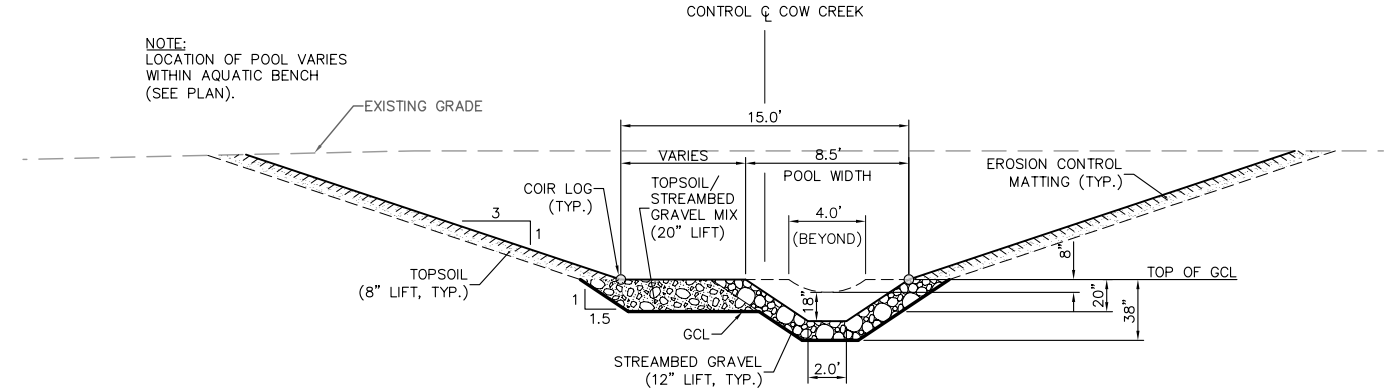

UPPER BENCH ZONE CROSS-SECTION AT POOL

S / C12

0 5' 10'
SCALE: 1"=5'

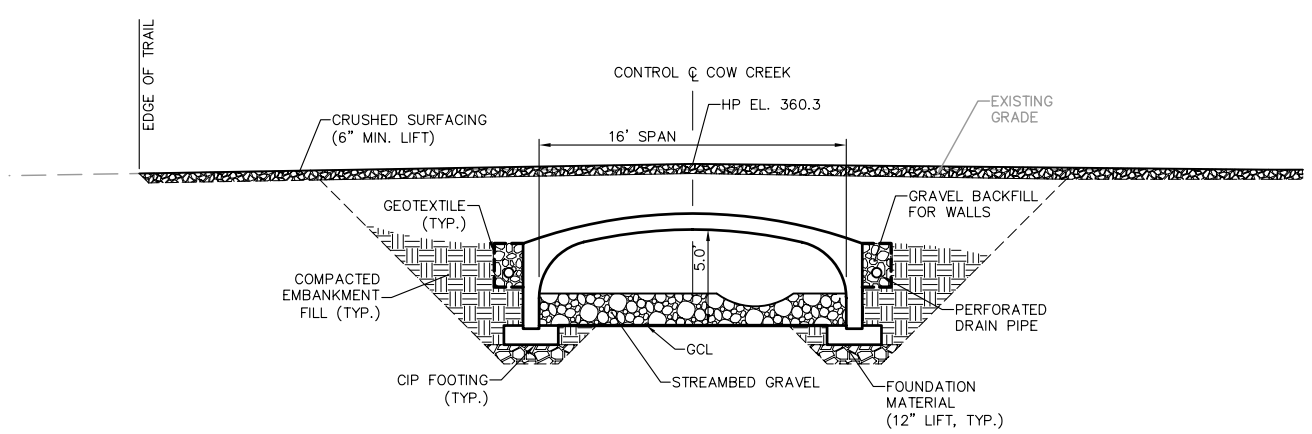

FOOTBRIDGE - TYPE D 3-SIDED BOX CROSS-SECTION

R / C12

0 5' 10'
SCALE: 1"=5'

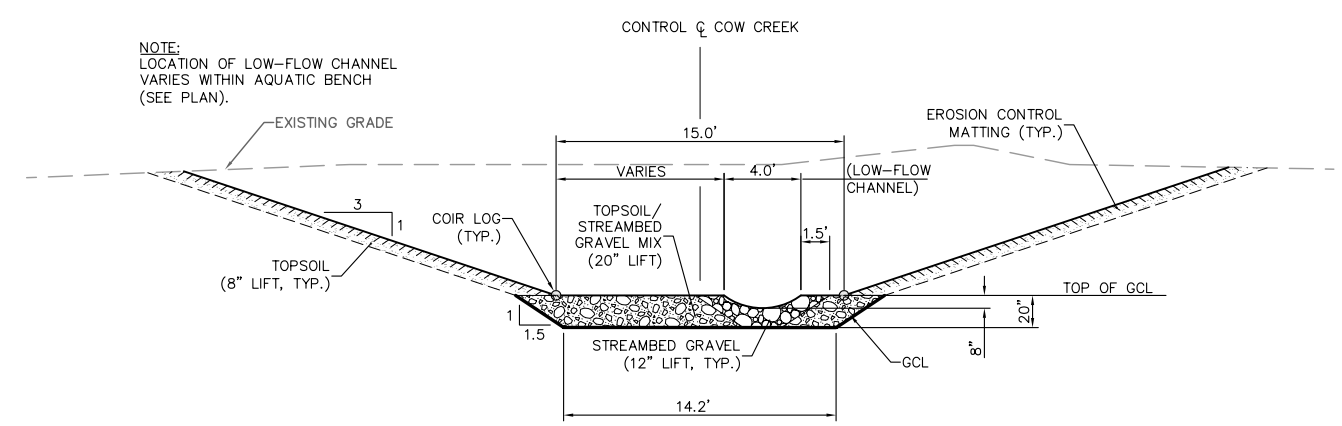

UPPER BENCH ZONE CROSS-SECTION AT RIFFLE

T / C12

0 5' 10'
SCALE: 1"=5'

DAVID J. CISAKOWSKI — STATE OF WASHINGTON — 30193 — REGISTERED PROFESSIONAL ENGINEER — EXPIRES: 6/9/06

GERALD A. BIBLE — STATE OF WASHINGTON — 24322 — REGISTERED PROFESSIONAL ENGINEER — EXPIRES: 11-03-07

90% Design Review Submittal - Not for Construction

MONTGOMERY WATER GROUP, INC.

NO.	REVISION	BY	DATE
–	–	–	–

DESIGNED: DJC | CHECKED: GAB | KENT PROJECT NO. –
DRAWN: DJC | PROJ MANGR: GAB | CONST. MGMT. REVIEW –
APPROVED: _____ CITY ENGINEER | DATE 02/13/06

SCALE: HORIZ: AS NOTED | VERT: AS NOTED

BAR IS ONE INCH ON ORIGINAL DRAWING ADJUST SCALES ACCORDINGLY
0" 1"

KENT WASHINGTON
City of Kent
Public Works Department
Engineering Division

CHANNEL SECTIONS

COW CREEK REALIGNMENT, LAKE MERIDIAN OUTLET, AND WETLAND RESTORATION IMPROVEMENTS

SHEET C21 OF 37
FILE NO. –

SECTIONS D CISAKOWSKI 02/13/06

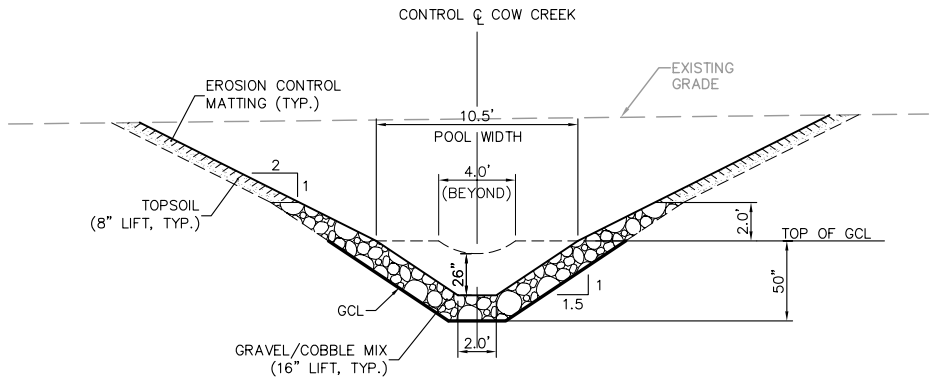

TRANSITION ZONE 1
CROSS-SECTION AT POOL

U / C13

0 5' 10'
SCALE: 1"=5'

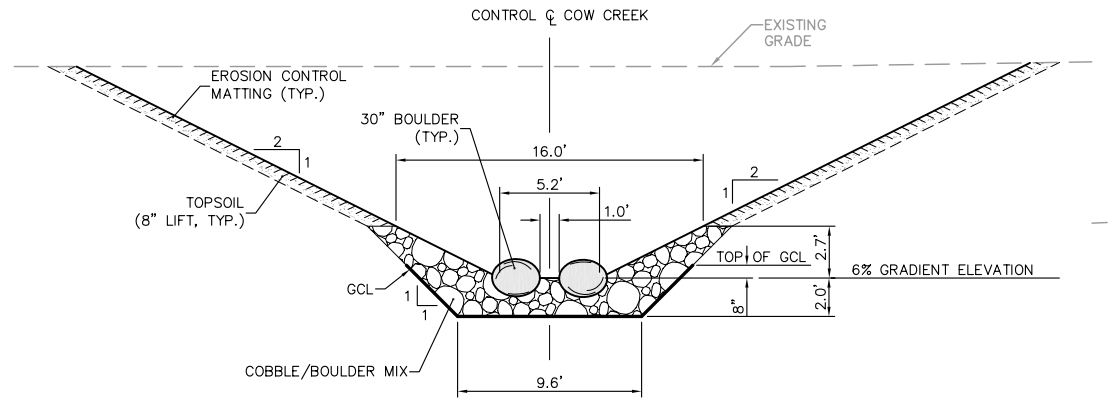

STEEP SLOPE ZONE
CROSS-SECTION AT HYD. CONTROL

W / C13

0 5' 10'
SCALE: 1"=5'

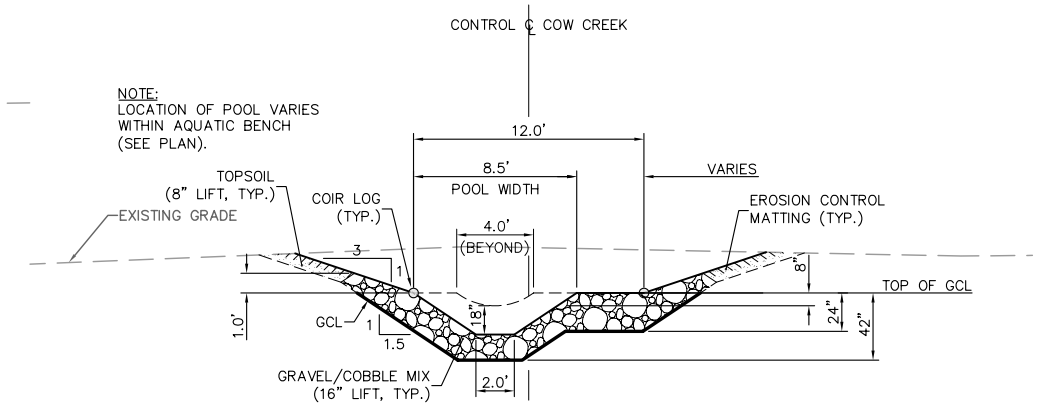

LOWER BENCH ZONE
CROSS-SECTION AT POOL

X / C14

0 5' 10'
SCALE: 1"=5'

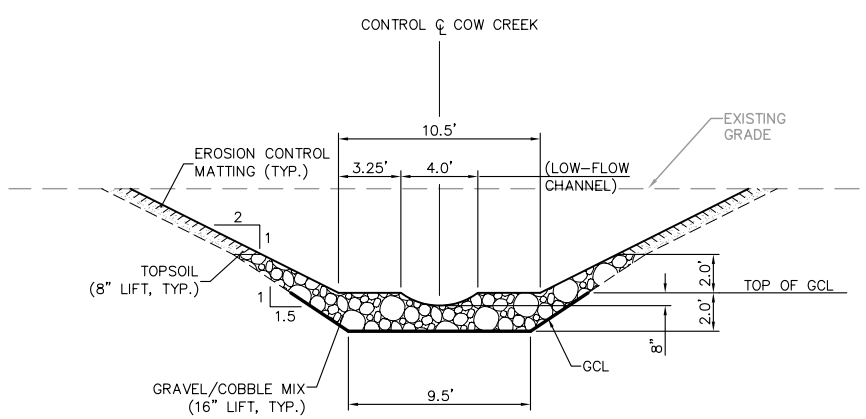

TRANSITION ZONE 1
CROSS-SECTION AT RIFFLE

V / C13

0 5' 10'
SCALE: 1"=5'

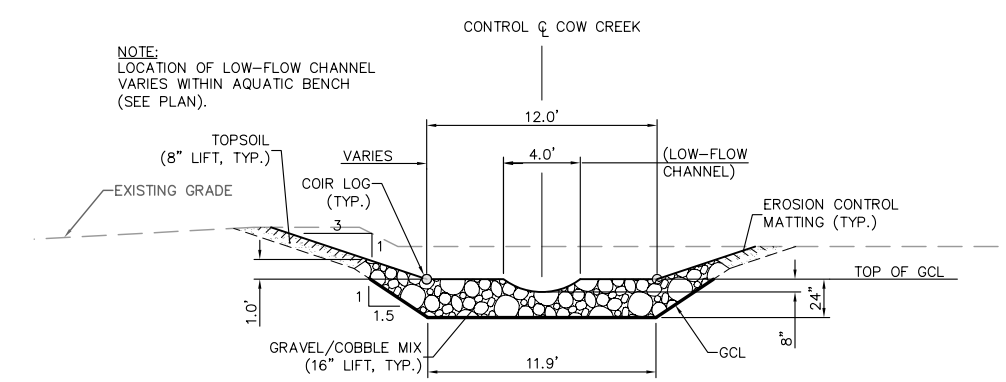

LOWER BENCH ZONE
CROSS-SECTION AT RIFFLE

Y / C14

0 5' 10'
SCALE: 1"=5'

DAVID J. CISAKOWSKI — STATE OF WASHINGTON — 30193 — REGISTERED PROFESSIONAL ENGINEER — EXPIRES: 6/9/06

GERALD A. BIBLE — STATE OF WASHINGTON — 24332 — REGISTERED PROFESSIONAL ENGINEER — EXPIRES: 11-03-07

90% Design Review Submittal - Not for Construction

MONTGOMERY WATER GROUP, INC.

NO.	REVISION	BY	DATE
–	–	–	–

DESIGNED: DJC | CHECKED: GAB | KENT PROJECT NO. –
DRAWN: DJC | PROJ MANGR: GAB | CONST. MGMT. REVIEW –
APPROVED: _____ CITY ENGINEER | DATE 02/13/06

SCALE: HORIZ: AS NOTED | VERT: AS NOTED

BAR IS ONE INCH ON ORIGINAL DRAWING ADJUST SCALES ACCORDINGLY
0" 1"

KENT WASHINGTON
City of Kent
Public Works Department
Engineering Division

CHANNEL SECTIONS

COW CREEK REALIGNMENT, LAKE MERIDIAN OUTLET, AND WETLAND RESTORATION IMPROVEMENTS

SHEET C22 OF 37
FILE NO. –

SECTIONS D CISAKOWSKI 02/13/06

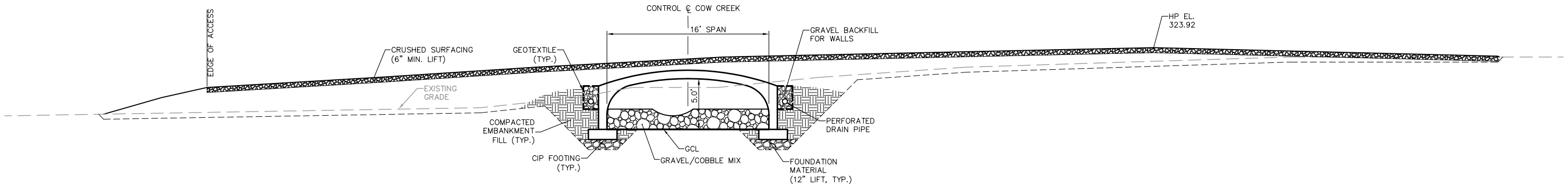

BPA UTILITY ACCESS - TYPE E 3-SIDED BOX CROSS-SECTION

Z / C14

0 5' 10'
SCALE: 1"=5'

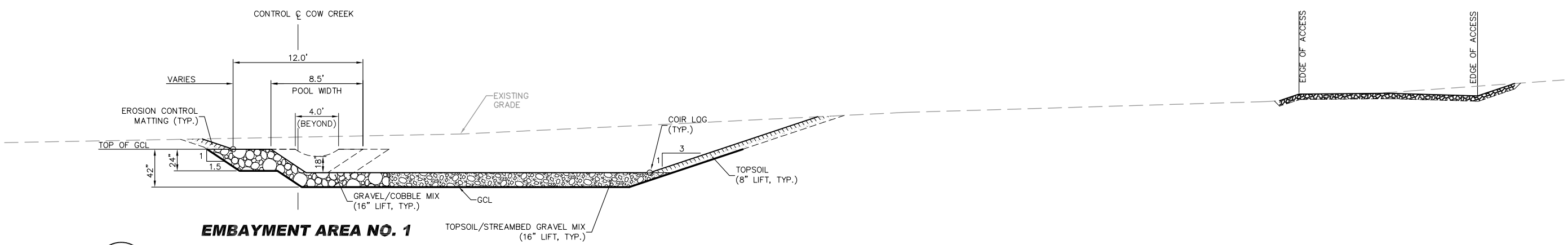

EMBAYMENT AREA NO. 1 CROSS-SECTION

AA / C14

0 5' 10'
SCALE: 1"=5'

DAVID J. CISAKOWSKI — STATE OF WASHINGTON — 30193 — REGISTERED PROFESSIONAL ENGINEER — EXPIRES: 6/9/06

GERALD A. BIBLE — STATE OF WASHINGTON — 24322 — REGISTERED PROFESSIONAL ENGINEER — EXPIRES: 11-03-07

90% Design Review Submittal - Not for Construction

MONTGOMERY WATER GROUP, INC.

NO.	REVISION	BY	DATE
–	–	–	–

DESIGNED: DJC | CHECKED: GAB | KENT PROJECT NO. –
DRAWN: DJC | PROJ MANGR: GAB | CONST. MGMT. REVIEW –
APPROVED: _____ CITY ENGINEER | DATE 02/13/06

SCALE: HORIZ: AS NOTED | VERT: AS NOTED

BAR IS ONE INCH ON ORIGINAL DRAWING ADJUST SCALES ACCORDINGLY 0" 1"

KENT WASHINGTON — City of Kent Public Works Department Engineering Division

CHANNEL SECTIONS

COW CREEK REALIGNMENT, LAKE MERIDIAN OUTLET, AND WETLAND RESTORATION IMPROVEMENTS

SHEET C23 OF 37

FILE NO. –

SECTIONS D CISAKOWSKI 02/13/06

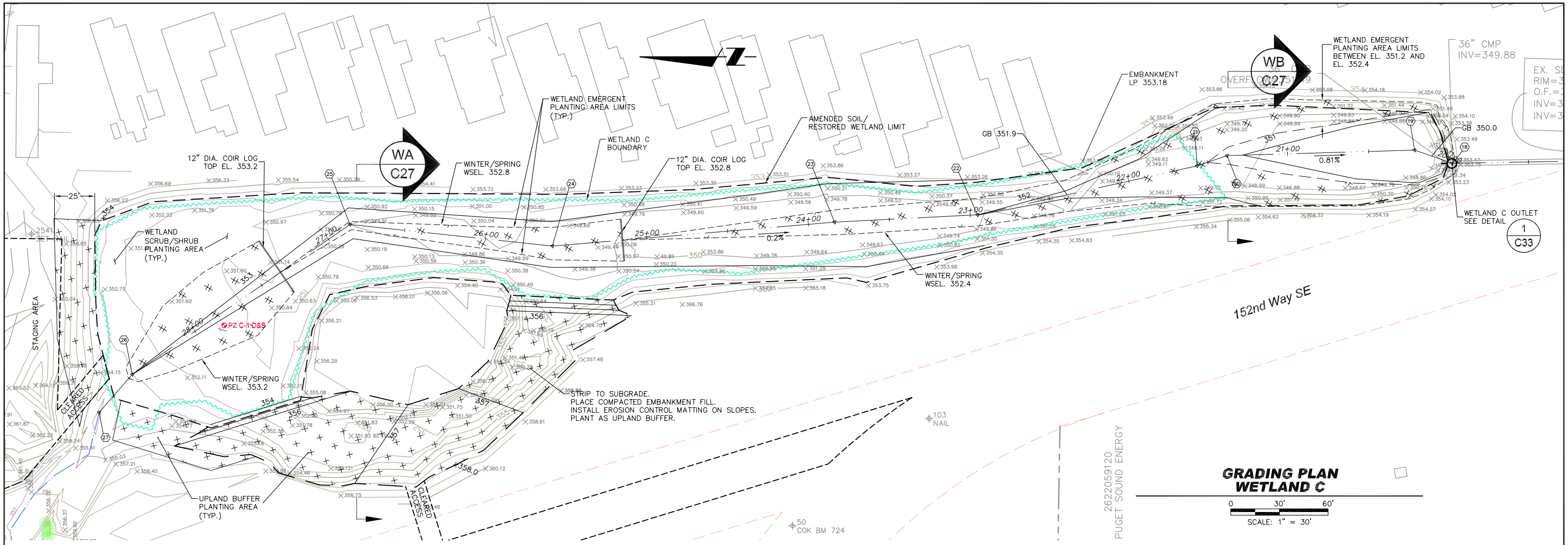

GRADING PLAN
WETLAND C

0 30' 60'
SCALE: 1" = 30'

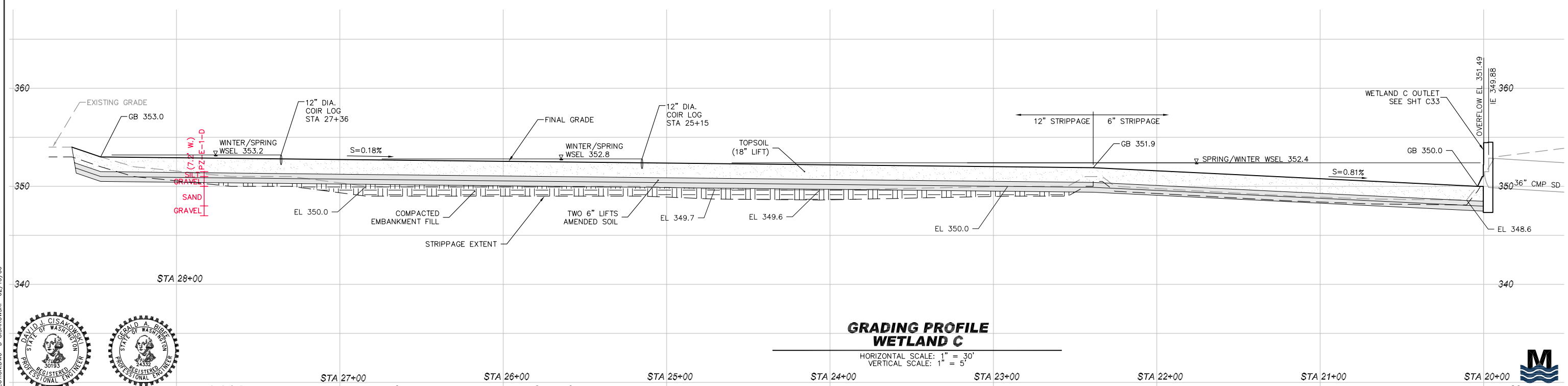

GRADING PROFILE
WETLAND C

HORIZONTAL SCALE: 1" = 30'
VERTICAL SCALE: 1" = 5'

DAVID J. CISAKOWSKI
STATE OF WASHINGTON
30193
REGISTERED PROFESSIONAL ENGINEER
05-05-06
EXPIRES: 6/9/06

GERALD A. BIRGE
STATE OF WASHINGTON
24332
REGISTERED PROFESSIONAL ENGINEER
05-05-06
EXPIRES: 11-03-07

90% Design Review Submittal - Not for Construction

MONTGOMERY WATER GROUP, INC.

NO.	REVISION	BY	DATE
–	–	–	–

DESIGNED: DJC | CHECKED: GAB | KENT PROJECT NO. –
DRAWN: DJC | PROJ MANGR: GAB | CONST. MGMT. REVIEW –
APPROVED: CITY ENGINEER
SCALE: HORIZ: AS NOTED VERT: AS NOTED
DATE 02/13/06
BAR IS ONE INCH ON ORIGINAL DRAWING ADJUST SCALES ACCORDINGLY 0" 1"

KENT WASHINGTON
City of Kent
Public Works Department
Engineering Division

PLAN AND PROFILE
WETLAND C

COW CREEK REALIGNMENT,
LAKE MERIDIAN OUTLET, AND
WETLAND RESTORATION IMPROVEMENTS

SHEET C24 OF 37
FILE NO. –

WETLAND PLAN AND SECTION.DWG D CISAKOWSKI 02/13/06

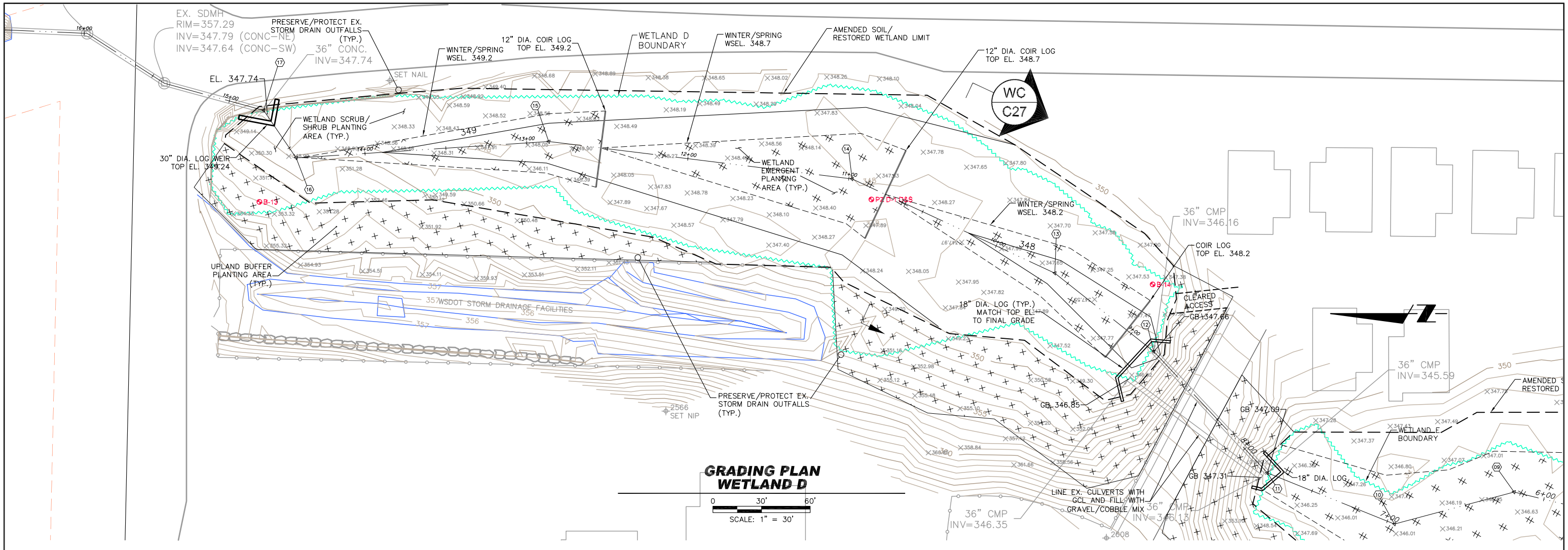

GRADING PLAN
WETLAND D

0 30' 60'
SCALE: 1" = 30'

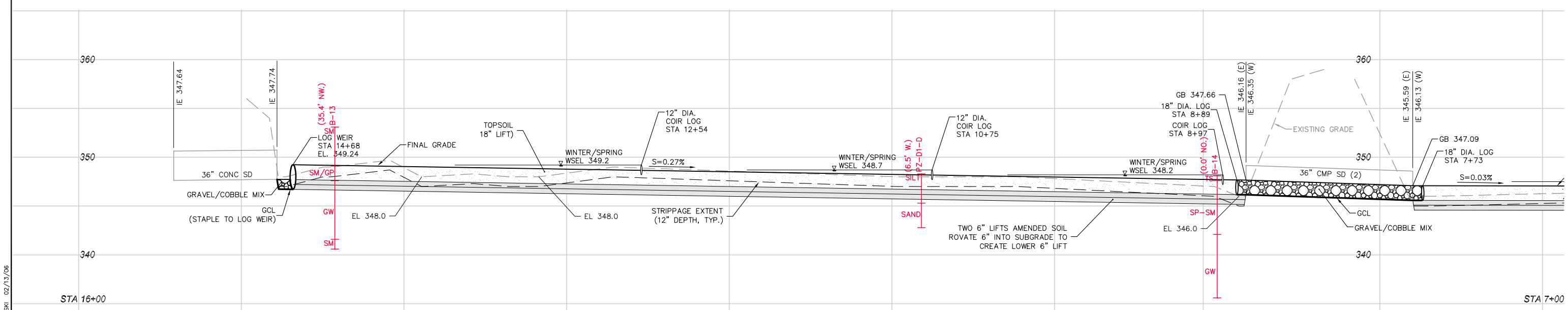

GRADING PROFILE
WETLAND D

HORIZONTAL SCALE: 1" = 30'
VERTICAL SCALE: 1" = 5'

DAVID J. CISAKOWSKI — STATE OF WASHINGTON — 30193 — REGISTERED PROFESSIONAL ENGINEER — 05-05-06 — EXPIRES: 6/9/06

GERALD A. BIRGE — STATE OF WASHINGTON — 24332 — REGISTERED PROFESSIONAL ENGINEER — 05-05-06 — EXPIRES: 11-03-07

90% Design Review Submittal - Not for Construction

MONTGOMERY WATER GROUP, INC.

NO.	REVISION	BY	DATE
–	–	–	–

DESIGNED: DJC | CHECKED: GAB | KENT PROJECT NO. –
DRAWN: DJC | PROJ MANGR: GAB | CONST. MGMT. REVIEW –
APPROVED: CITY ENGINEER | DATE 02/13/06
SCALE: HORIZ: AS NOTED | VERT: AS NOTED
BAR IS ONE INCH ON ORIGINAL DRAWING ADJUST SCALES ACCORDINGLY 0" 1"

KENT WASHINGTON
City of Kent
Public Works Department
Engineering Division

PLAN AND PROFILE
WETLAND D

COW CREEK REALIGNMENT,
LAKE MERIDIAN OUTLET, AND
WETLAND RESTORATION IMPROVEMENTS

SHEET C25 OF 37
FILE NO. –

WETLAND PLAN AND SECTION.DWG D CISAKOWSKI 02/13/06

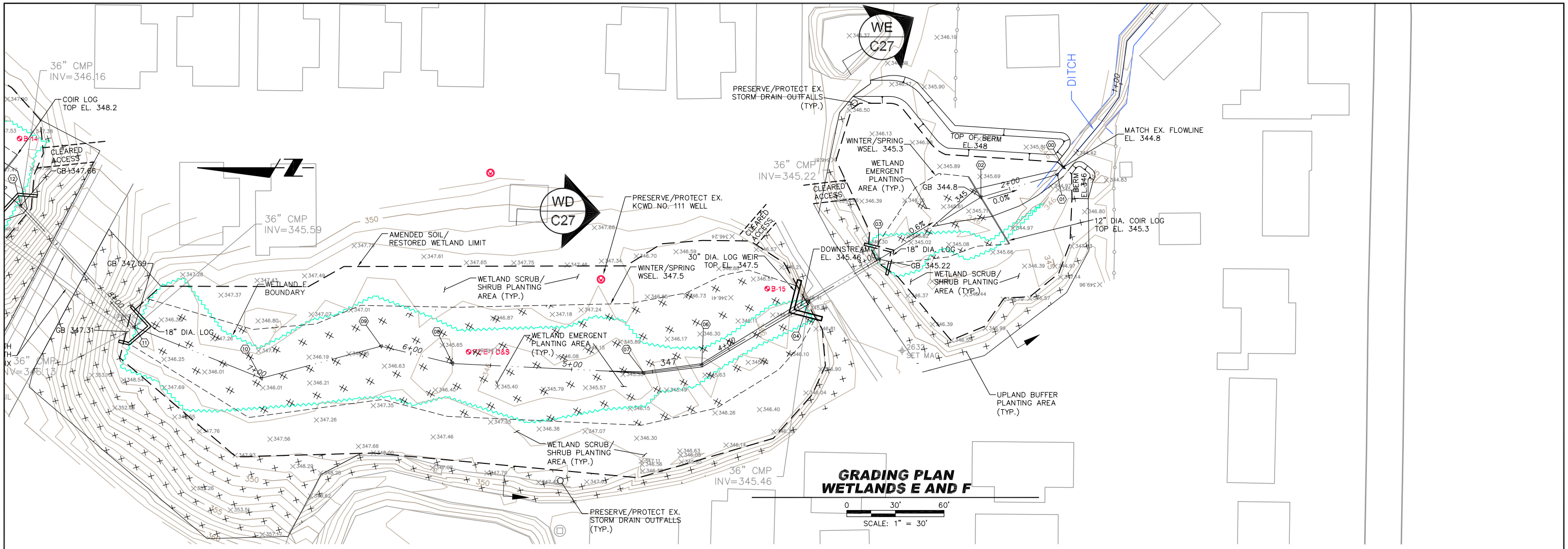

DAVID J. CISAKOWSKI STATE OF WASHINGTON 30193 REGISTERED PROFESSIONAL ENGINEER
EXPIRES: 6/9/06

GERALD A. BIBBE STATE OF WASHINGTON 24332 REGISTERED PROFESSIONAL ENGINEER
EXPIRES: 11-03-07

90% Design Review Submittal - Not for Construction

MONTGOMERY WATER GROUP, INC.

NO.	REVISION	BY	DATE
–	–	–	–

DESIGNED: DJC | CHECKED: GAB | KENT PROJECT NO. –
DRAWN: DJC | PROJ MANGR: GAB | CONST. MGMT. REVIEW –
APPROVED: CITY ENGINEER

SCALE: HORIZ: AS NOTED VERT: AS NOTED
DATE 02/13/06

BAR IS ONE INCH ON ORIGINAL DRAWING ADJUST SCALES ACCORDINGLY 0" 1"

KENT WASHINGTON
City of Kent
Public Works Department
Engineering Division

PLAN AND PROFILE
WETLANDS E AND F

COW CREEK REALIGNMENT,
LAKE MERIDIAN OUTLET, AND
WETLAND RESTORATION IMPROVEMENTS

SHEET C26 OF 37
FILE NO. –

WETLAND PLAN AND SECTION.DWG D CISAKOWSKI 02/13/06

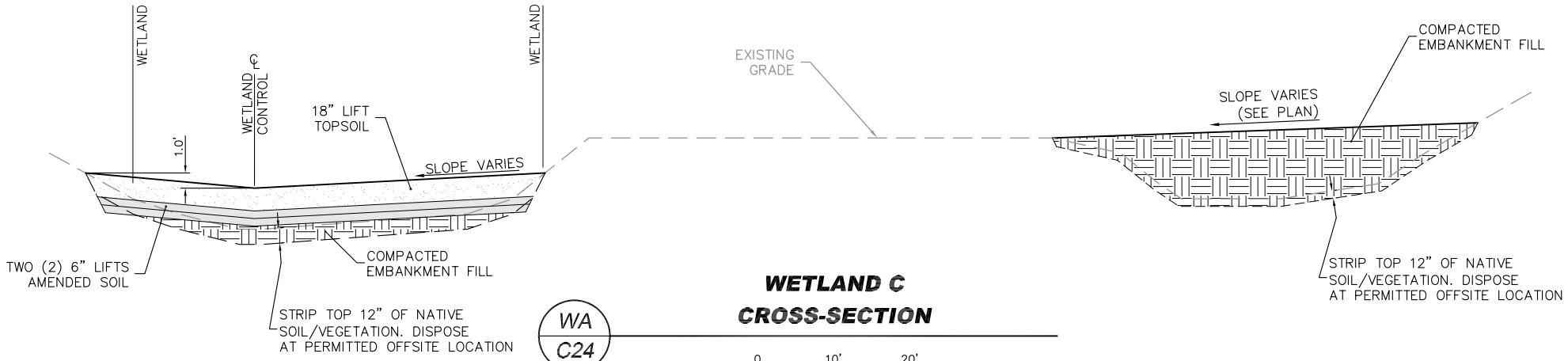

WETLAND C CROSS-SECTION

WA / C24

0 10' 20'
SCALE: 1"=10'
VERTICAL SCALE: 1"=5'

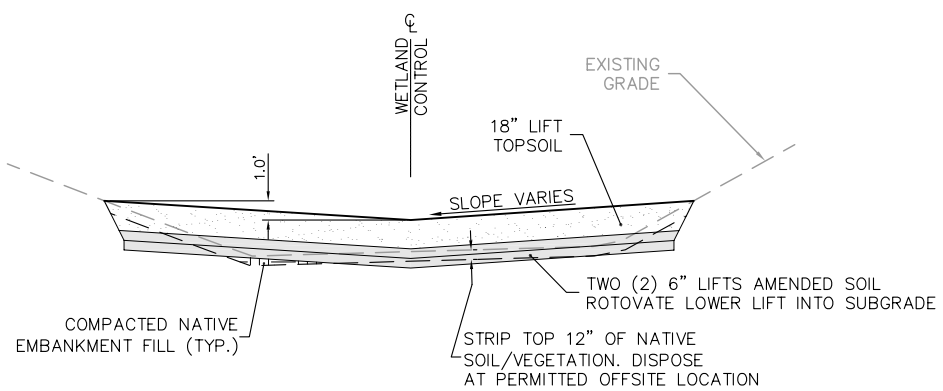

WETLAND C CROSS-SECTION

WB / C24

0 10' 20'
SCALE: 1"=10'
VERTICAL SCALE: 1"=5'

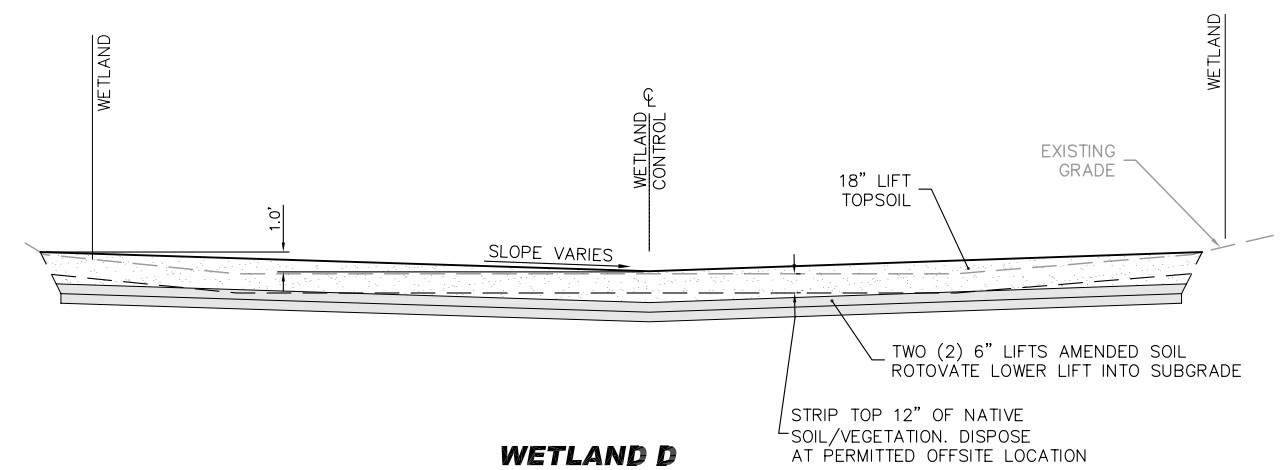

WETLAND D CROSS-SECTION

WC / C25

0 10' 20'
SCALE: 1"=10'
VERTICAL SCALE: 1"=5'

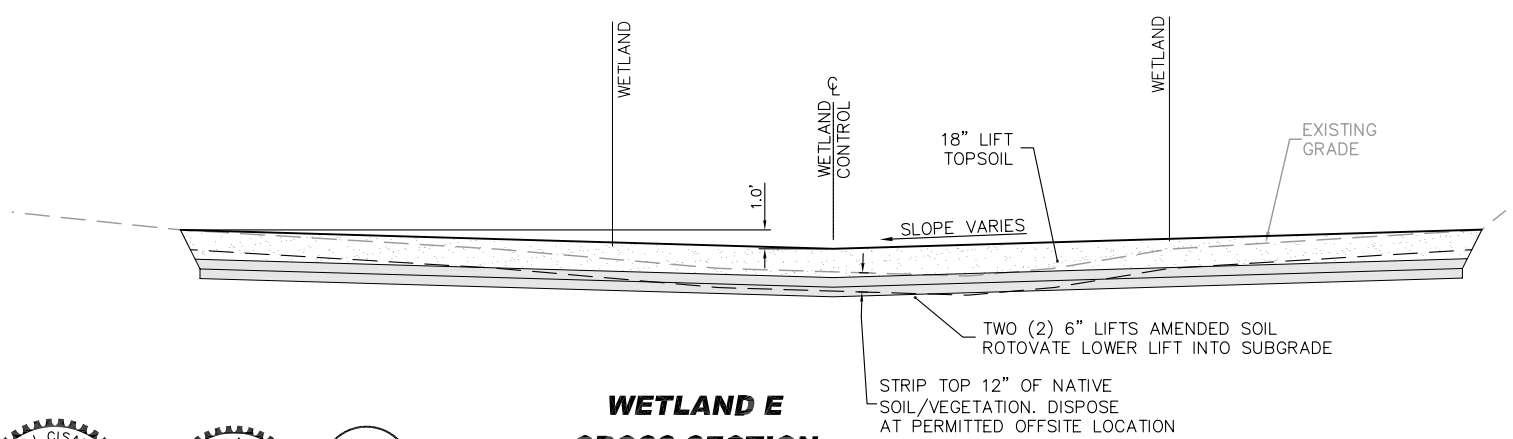

WETLAND E CROSS-SECTION

WD / C26

0 10' 20'
SCALE: 1"=10'
VERTICAL SCALE: 1"=5'

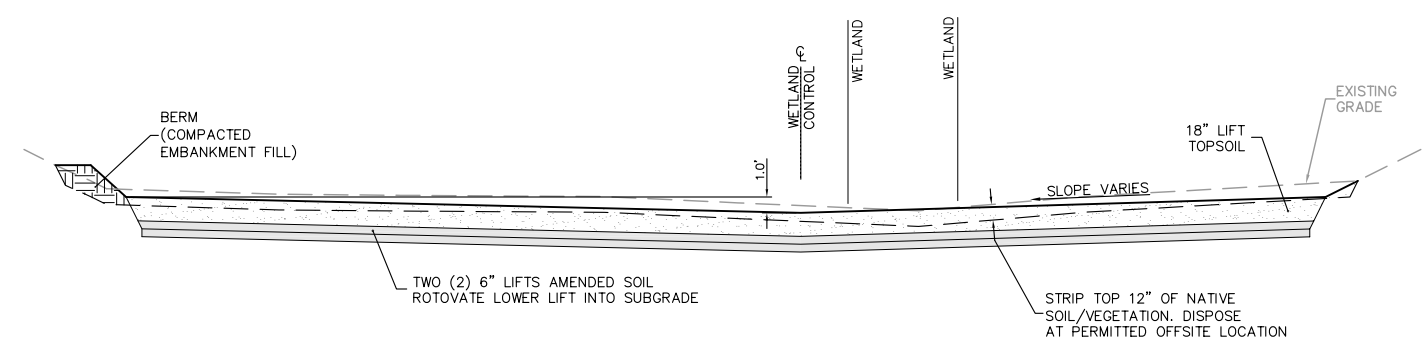

WETLAND F CROSS-SECTION

WE / C26

0 10' 20'
SCALE: 1"=10'
VERTICAL SCALE: 1"=5'

DAVID J. CISAKOWSKI STATE OF WASHINGTON 30193 REGISTERED PROFESSIONAL ENGINEER
05-05-06 EXPIRES: 6/9/06

GERALD A. BIBBE STATE OF WASHINGTON 24332 REGISTERED PROFESSIONAL ENGINEER
05-05-06 EXPIRES: 11-03-07

90% Design Review Submittal - Not for Construction

MONTGOMERY WATER GROUP, INC.

NO.	REVISION	BY	DATE
–	–	–	–

DESIGNED: DJC | CHECKED: GAB | KENT PROJECT NO. –
DRAWN: DJC | PROJ MANGR: GAB | CONST. MGMT. REVIEW –
APPROVED: _____ CITY ENGINEER

SCALE: HORIZ: AS NOTED | VERT: AS NOTED
DATE 02/13/06

BAR IS ONE INCH ON ORIGINAL DRAWING ADJUST SCALES ACCORDINGLY
0" 1"

KENT WASHINGTON
City of Kent
Public Works Department
Engineering Division

WETLAND SECTIONS

COW CREEK REALIGNMENT, LAKE MERIDIAN OUTLET, AND WETLAND RESTORATION IMPROVEMENTS

SHEET C27 OF 37
FILE NO. –

WETLAND PLAN AND SECTION.DWG D CISAKOWSKI 02/13/06

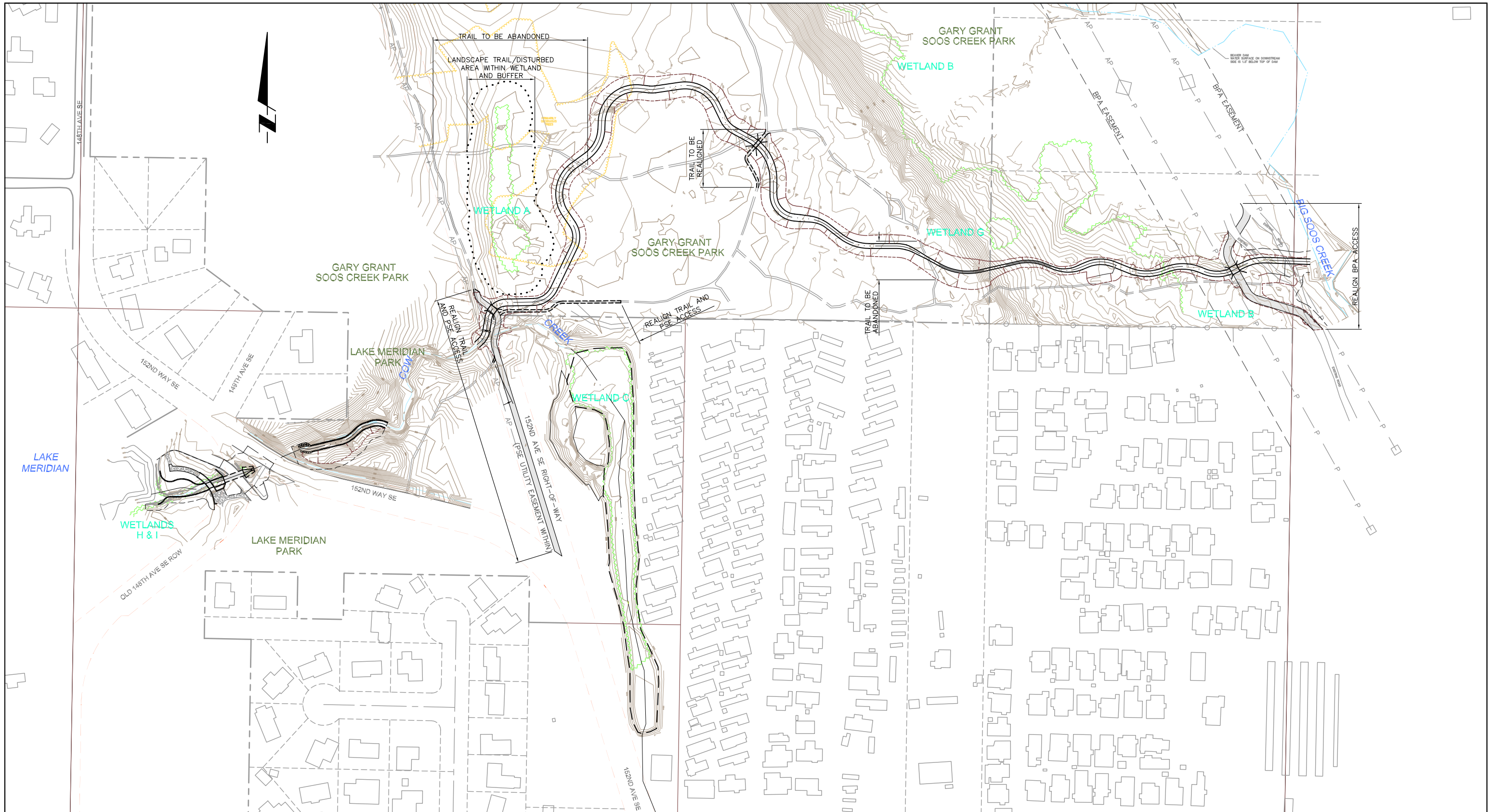

NOTES:
1. SEE DETAIL 6/C28 FOR TYPICAL TRAIL AND UTILITY ACCESS SECTION.

TRAIL AND UTILITY ACCESS PLAN

0 100' 200'
SCALE: 1"=100'

DAVID J. CISAKOWSKI — STATE OF WASHINGTON — 30193 — REGISTERED PROFESSIONAL ENGINEER — EXPIRES: 6/9/06

GERALD A. BIBBE — STATE OF WASHINGTON — 24332 — REGISTERED PROFESSIONAL ENGINEER — EXPIRES: 11-03-07

90% Design Review Submittal - Not for Construction

MONTGOMERY WATER GROUP, INC.

NO.	REVISION	BY	DATE
–	–	–	–

DESIGNED: DJC | CHECKED: GAB | KENT PROJECT NO. –
DRAWN: DJC | PROJ MANGR: GAB | CONST. MGMT. REVIEW –
APPROVED: _____ CITY ENGINEER
SCALE: HORIZ: AS NOTED VERT: AS NOTED
DATE 02/13/06
BAR IS ONE INCH ON ORIGINAL DRAWING ADJUST SCALES ACCORDINGLY 0" 1"

KENT WASHINGTON
City of Kent
Public Works Department
Engineering Division

TRAIL AND UTILITY ACCESS PLAN

COW CREEK REALIGNMENT, LAKE MERIDIAN OUTLET, AND WETLAND RESTORATION IMPROVEMENTS

SHEET C28 OF 37
FILE NO. –

TRAIL PLAN.DWG D CISAKOWSKI 02/13/06

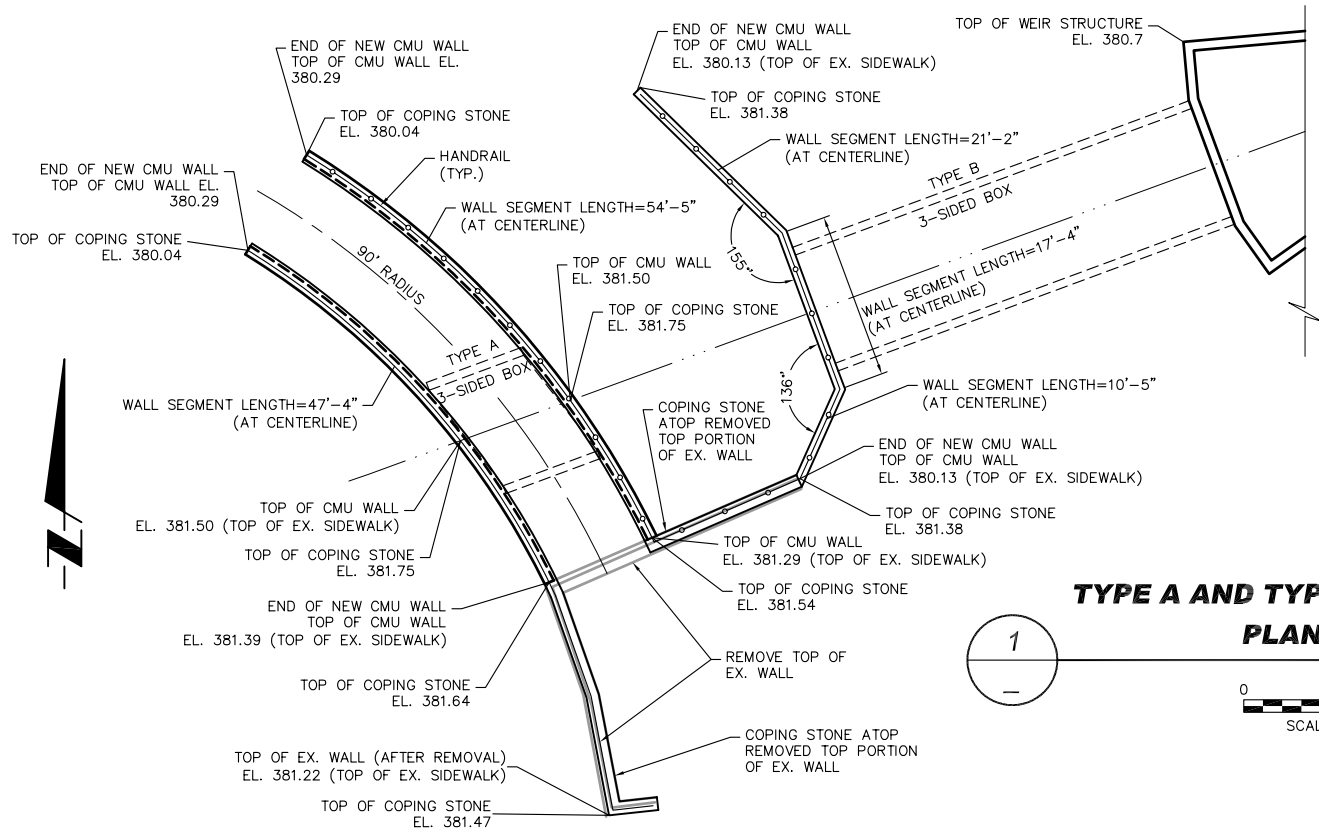

NOTES:

1. TYPE A 3-SIDED BOX SHALL BE A CUSTOM DESIGN PRECAST CONCRETE STRUCTURE 12' SPAN x 5'-2" RISE x 10' LONG ON A 27' SKEW. 3-SIDE BOX SHALL BE DESIGNED BASED ON THE OVERBURDEN DEAD LOAD AND AASHTO HS 20-44 + 30% IMPACT LOADING.
2. TYPE B 3-SIDED BOX SHALL BE A CUSTOM DESIGN PRECAST CONCRETE STRUCTURE 12' SPAN x 5'-2" RISE x 44' LONG. 3-SIDED BOX SHALL B DESIGNED BASED ON THE OVERBURDEN DEAD LOAD AND AASHTO HS 20-44 + 30% IMPACT LOADING.
3. CONTRACTOR SHALL PROVIDE BOX SHOP DRAWINGS FOR CITY REVIEW/ACCEPTANCE.
4. SEE STRUCTURAL DRAWINGS FOR CMU WALL LAYOUT AND DETAILS. SEE STRUCTURAL DRAWINGS FOR HANDRAIL DETAILS.

TYPE A AND TYPE B 3-SIDED BOXES PLAN DETAIL

1 / –

0 10' 20'
SCALE: 1"=10'

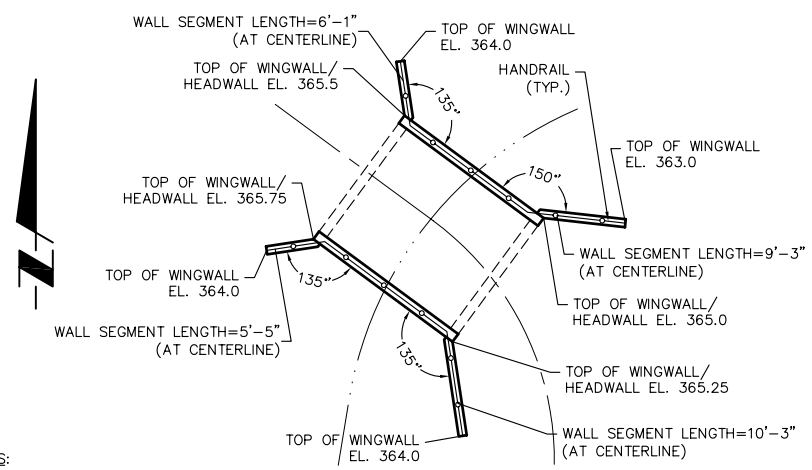

NOTES:

1. 3-SIDED BOX SHALL BE A CUSTOM DESIGN PRECAST CONCRETE ARCH STRUCTURE 16' SPAN x 5'-2" RISE x 14' LONG. 3-SIDED BOX, HEADWALL, AND FOOTINGS SHALL BE DESIGNED BASED ON THE OVERBURDEN DEAD LOAD AND AASHTO HS 20-44 + 30% IMPACT LOADING; ALLOWABLE SOIL BEARING CAPACITY OF 2,500 PSF.
2. WINGWALLS SHOWN ARE CUSTOM DESIGN PRECAST STRUCTURES. WINGWALL DESIGN SHALL BE BASED ON AN EQUIVALENT FLUID PRESSURE OF 50 PCF FOR LATERAL PRESSURE AND AN EQUILVALENT FLUID PRESSURE OF 150 PCF FOR LATERAL RESISTANCE WITH A COEFFICIENT OF FRICTION OF 0.4. AN EQUIVALENT FLUID PRESSURE OF 100 PCF FOR LATERAL PRESSURE SHALL BE USED FOR AREAS
3. INFLUENCED BY TRAFFIC LOADING.

CONTRACTOR SHALL PROVIDE BOX/HEADWALL/WINGWALL SHOP DRAWINGS FOR CITY REVIEW/ACCEPTANCE.

TYPE C 3-SIDED BOX PLAN DETAIL

2 / –

0 10' 20'
SCALE: 1"=10'

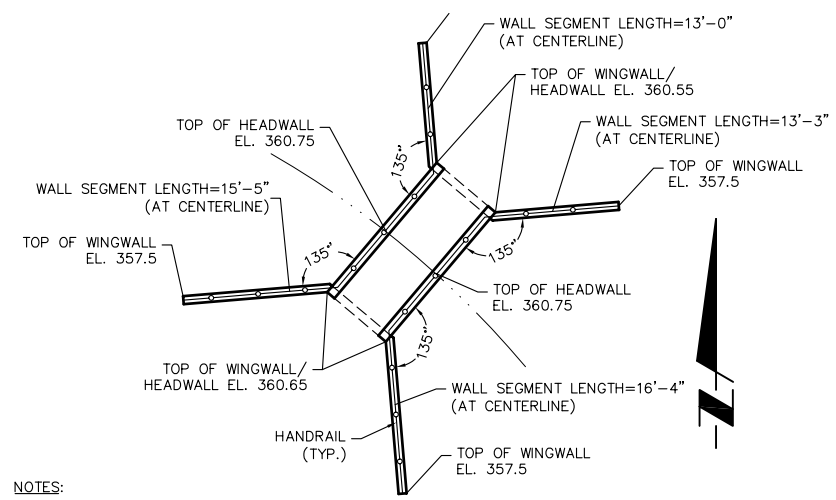

NOTES:

1. 3-SIDED BOX SHALL BE A CUSTOM DESIGN PRECAST CONCRETE ARCH STRUCTURE 16' SPAN x 5'-2" RISE x 8' LONG. 3-SIDED BOX, HEADWALL, AND FOOTINGS SHALL BE DESIGNED BASED ON THE OVERBURDEN DEAD LOAD AND AASHTO HS 20-44 + 30% IMPACT LOADING; ALLOWABLE SOIL BEARING CAPACITY OF 2,500 PSF.
2. WINGWALLS SHOWN ARE CUSTOM DESIGN PRECAST STRUCTURES. WINGWALL DESIGN SHALL BE BASED ON AN EQUIVALENT FLUID PRESSURE OF 50 PCF FOR LATERAL PRESSURE AND AN EQUILVALENT FLUID PRESSURE OF 150 PCF FOR LATERAL RESISTANCE WITH A COEFFICIENT OF FRICTION OF 0.4. AN EQUIVALENT FLUID PRESSURE OF 100 PCF FOR LATERAL PRESSURE SHALL BE USED FOR AREAS
3. INFLUENCED BY TRAFFIC LOADING.

CONTRACTOR SHALL PROVIDE BOX/HEADWALL/WINGWALL SHOP DRAWINGS FOR CITY REVIEW/ACCEPTANCE.

TYPE D 3-SIDED BOX PLAN DETAIL

3 / –

0 10' 20'
SCALE: 1"=10'

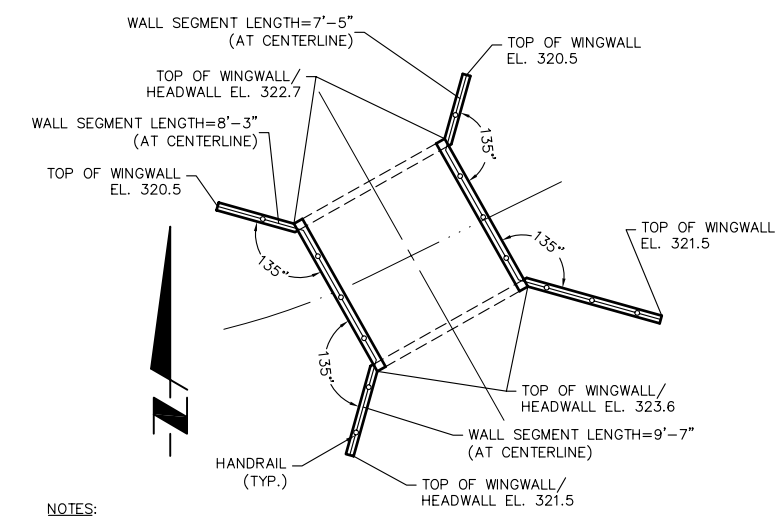

NOTES:

1. 3-SIDED BOX SHALL BE A CUSTOM DESIGN PRECAST CONCRETE ARCH STRUCTURE 16' SPAN x 5'-2" RISE x18' LONG. 3-SIDED BOX, HEADWALL, AND FOOTINGS SHALL BE DESIGNED BASED ON THE OVERBURDEN DEAD LOAD AND AASHTO HS 20-44 + 30% IMPACT LOADING; ALLOWABLE SOIL BEARING CAPACITY OF 3,000 PSF.
2. WINGWALLS SHOWN ARE CUSTOM DESIGN PRECAST STRUCTURES. WINGWALL DESIGN SHALL BE BASED ON AN EQUIVALENT FLUID PRESSURE OF 50 PCF FOR LATERAL PRESSURE AND AN EQUILVALENT FLUID PRESSURE OF 150 PCF FOR LATERAL RESISTANCE WITH A COEFFICIENT OF FRICTION OF 0.4. AN EQUIVALENT FLUID PRESSURE OF 100 PCF FOR LATERAL PRESSURE SHALL BE USED FOR AREAS
3. INFLUENCED BY TRAFFIC LOADING.

CONTRACTOR SHALL PROVIDE BOX/HEADWALL/WINGWALL SHOP DRAWINGS FOR CITY REVIEW/ACCEPTANCE.

TYPE E 3-SIDED BOX PLAN DETAIL

4 / –

0 10' 20'
SCALE: 1"=10'

DAVID J. CISAKOWSKI, STATE OF WASHINGTON, 30193, REGISTERED PROFESSIONAL ENGINEER — EXPIRES: 6/9/06

GERALD A. BIBBE, STATE OF WASHINGTON, 24332, REGISTERED PROFESSIONAL ENGINEER — EXPIRES: 11-03-07

90% Design Review Submittal - Not for Construction

NO.	REVISION	BY	DATE
–	–	–	–

DESIGNED: DJC | CHECKED: GAB | KENT PROJECT NO. –
DRAWN: DJC | PROJ MANGR: GAB | CONST. MGMT. REVIEW –
APPROVED: _____ CITY ENGINEER

SCALE: HORIZ: AS NOTED | VERT: AS NOTED
DATE 02/13/06

BAR IS ONE INCH ON ORIGINAL DRAWING ADJUST SCALES ACCORDINGLY
0" 1"

KENT WASHINGTON
City of Kent
Public Works Department
Engineering Division

3-SIDED BOX PLAN

COW CREEK REALIGNMENT,
LAKE MERIDIAN OUTLET, AND
WETLAND RESTORATION IMPROVEMENTS

SHEET C29 OF 37

MONTGOMERY WATER GROUP, INC.

LAKE OUTLET DETAILS.DWG D CISAKOWSKI 02/13/06

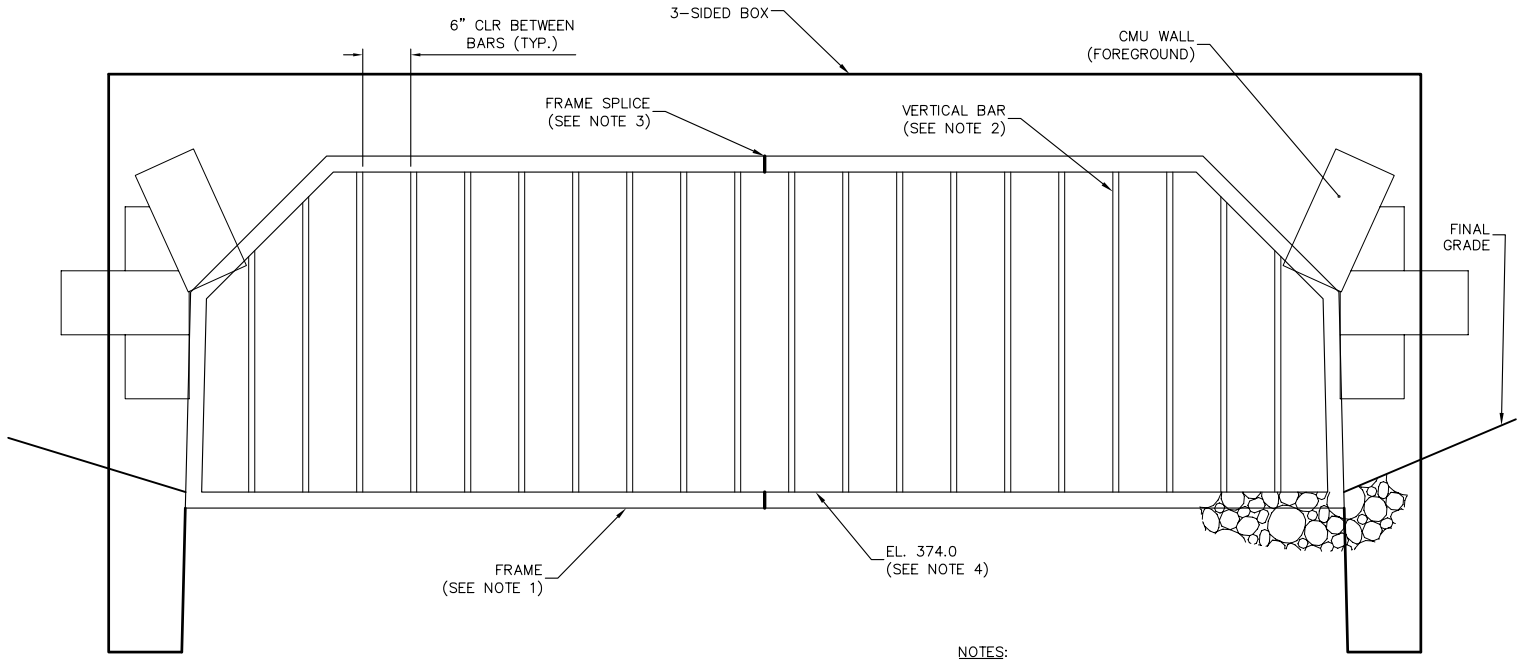

TYPE B 3-SIDED BOX SAFETY BAR RACK DETAIL

1 / C15

0 1' 2'
SCALE: 1"=1'

NOTES:

1. FRAME SHALL BE 2"x2"x¼" STEEL SQUARE TUBE. FIELD MEASURE 3-SIDED BOX OPENING TO ENSURE PROPER FIT. PROVIDE SHOP DRAWINGS FOR CITY REVIEW/ACCEPTANCE PRIOR TO FABRICATION.
2. VERTICAL BAR SHALL BE ¾" DIAMETER SOLID STEEL ROUND.
3. PROVIDE FRAME SPLICE (TO ALLOW FOR FIT ADJUSTMENT).
4. TOP EDGE OF BOTTOM PORTION OF FRAME TO COINCIDE WITH FINAL CHANNEL GRADE ELEVATION.
5. AFTER FABRICATION, SAFETY BAR RACK SHALL BE HOT-DIPPED GALVANIZED WITH A MIN. ZINC COATING OF 2 OZ./SF. ALL BURRS AND SHARP EDGES SHALL BE REMOVED PRIOR TO GALVANIZING. FIELD WELDS SHALL BE GALVANIZED W/ "GALALLOY" OR APPROVED EQUIVALENT.

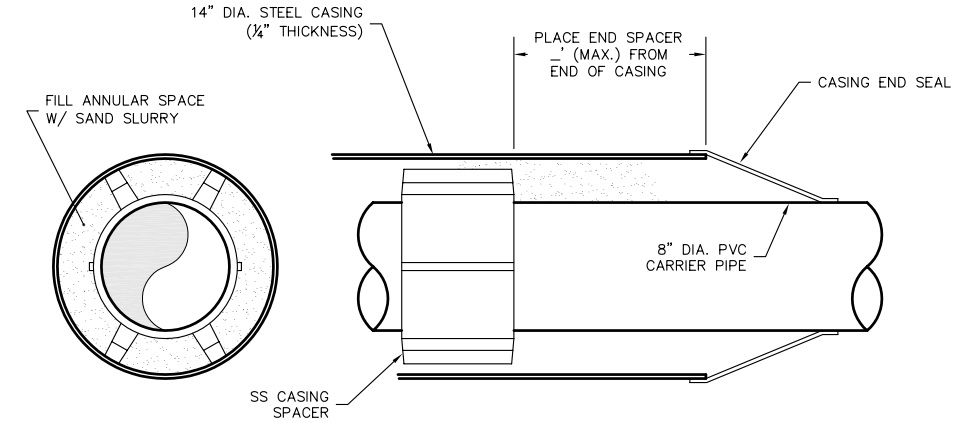

SANITARY SEWER PIPE CASING DETAIL

2 / C15

0 1/2' 1'
SCALE: 1"=1/2'

NOTES:

1. MAXIMUM DISTANCE BETWEEN SPACERS SHALL BE 6' W/ A SPACER WITHIN 2' OF PIPE ENDS.
2. STAINLESS STEEL CASING SPACER SHALL BE "CENTER-POSITIONING" TYPE AS MANUFACTURED BY CASCADE WATERWORKS MFG. OR APPROVED EQUAL, SIZED TO FIT CARRIER PIPE AND CASING
3. CASING END SEAL SHALL BE MODEL "CCES" AS MANUFACTURED BY CASCADE WATERWORKS MFG OR EQUAL SIZED TO FIT CARRIER PIPE AND CASING.

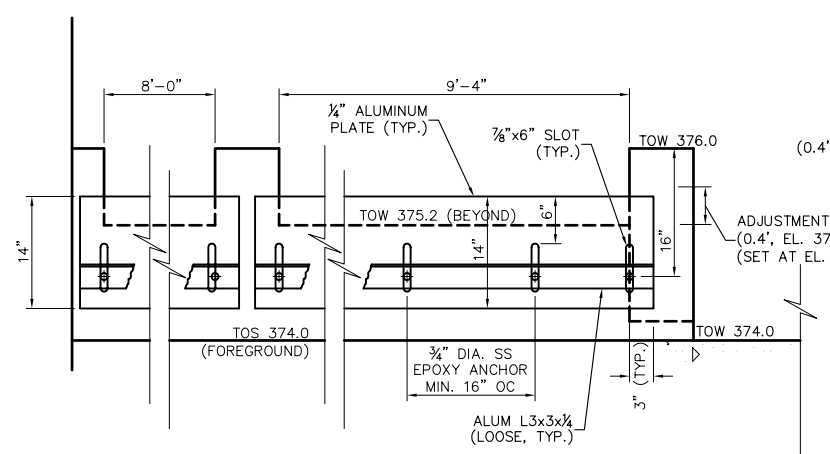

LABYRINTH WEIR WALL PLATE DETAIL

3 / C15

0 1' 2'
SCALE: 1"=1'

NOTES:

1. FIELD MEASURE WEIR STRUCTURE INTERIOR WALL OPENINGS TO ENSURE PROPER FIT OF WEIR WALL PLATES AND V-NOTCH WEIR PLATE. PROVIDE SHOP DRAWINGS FOR CITY REVIEW/ACCEPTANCE PRIOR TO FABRICATION.

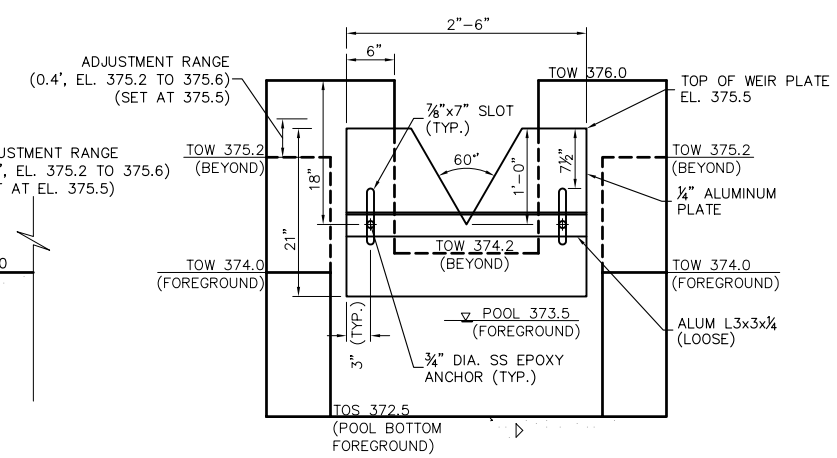

V-NOTCH WEIR PLATE DETAIL

4 / C15

0 1' 2'
SCALE: 1"=1'

DAVID J. CISAKOWSKI, STATE OF WASHINGTON, 30193, REGISTERED PROFESSIONAL ENGINEER, EXPIRES: 6/9/06

GERALD A. BIBLE, STATE OF WASHINGTON, 24332, REGISTERED PROFESSIONAL ENGINEER, EXPIRES: 11-03-07

90% Design Review Submittal - Not for Construction

MONTGOMERY WATER GROUP, INC.

NO.	REVISION	BY	DATE
–	–	–	–

DESIGNED: DJC | CHECKED: GAB | KENT PROJECT NO. –
DRAWN: DJC | PROJ MANGR: GAB | CONST. MGMT. REVIEW –
APPROVED: _____ CITY ENGINEER | DATE 02/13/06

SCALE: HORIZ: AS NOTED | VERT: AS NOTED

BAR IS ONE INCH ON ORIGINAL DRAWING ADJUST SCALES ACCORDINGLY
0" 1"

KENT WASHINGTON
City of Kent
Public Works Department
Engineering Division

LAKE OUTLET DETAILS

COW CREEK REALIGNMENT, LAKE MERIDIAN OUTLET, AND WETLAND RESTORATION IMPROVEMENTS

SHEET C30 OF 37
– –

LAKE OUTLET DETAILS.DWG D. CISAKOWSKI 02/13/06

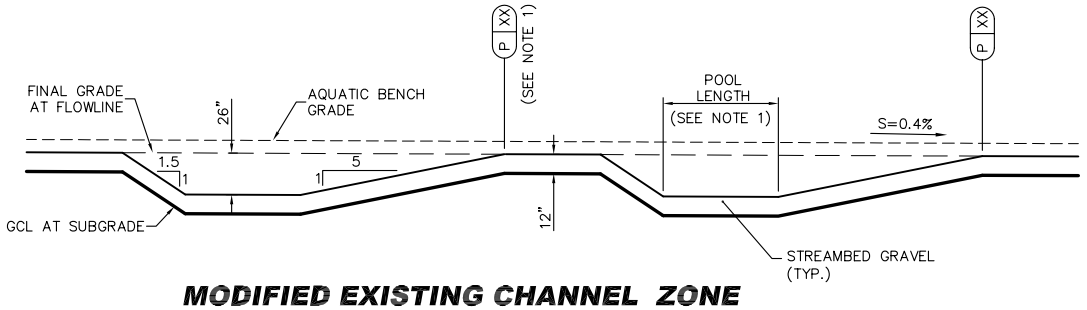

MODIFIED EXISTING CHANNEL ZONE TYPICAL RIFFLE/POOL PROFILE

1 / –

0 5' 10'
SCALE: 1"=5'

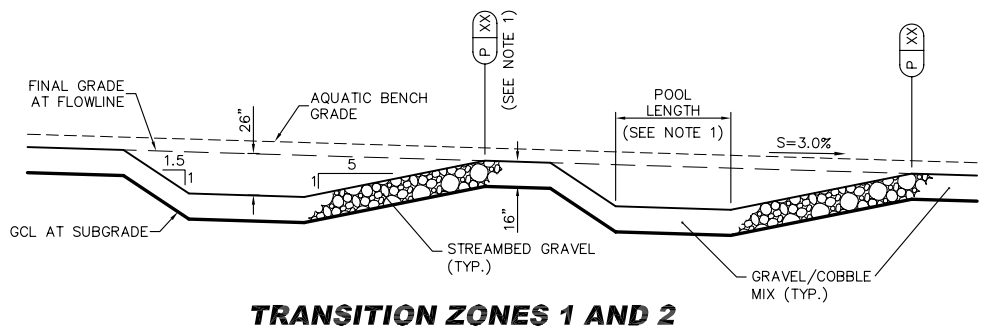

TRANSITION ZONES 1 AND 2 TYPICAL RIFFLE/POOL PROFILE

2 / –

0 5' 10'
SCALE: 1"=5'

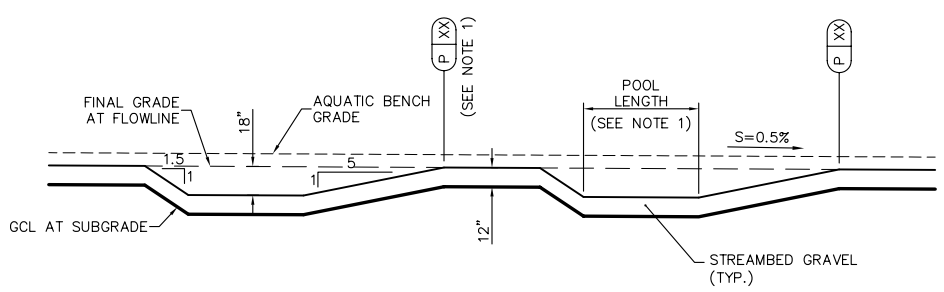

UPPER BENCH ZONE TYPICAL RIFFLE/POOL PROFILE

3 / –

0 5' 10'
SCALE: 1"=5'

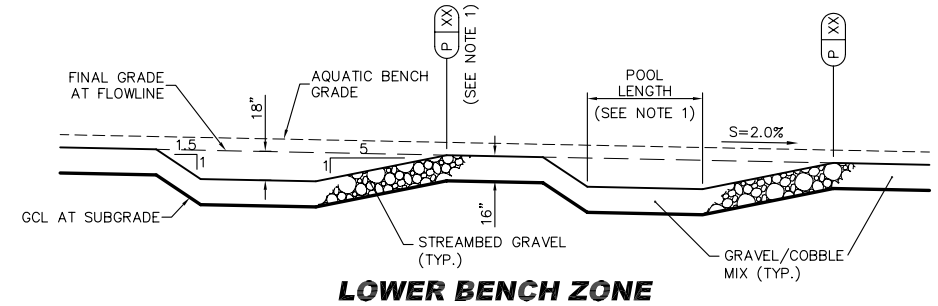

LOWER BENCH ZONE TYPICAL RIFFLE/POOL PROFILE

4 / –

0 5' 10'
SCALE: 1"=5'

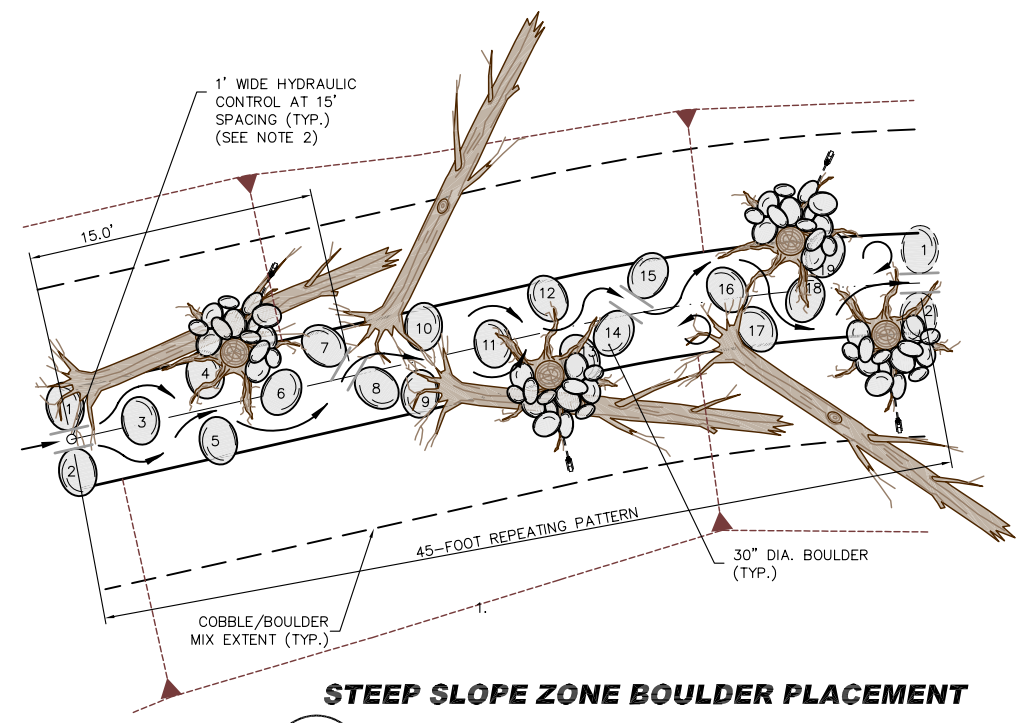

STEEP SLOPE ZONE BOULDER PLACEMENT DETAIL

5 / C13

0 5' 10'
SCALE: 1"=5'

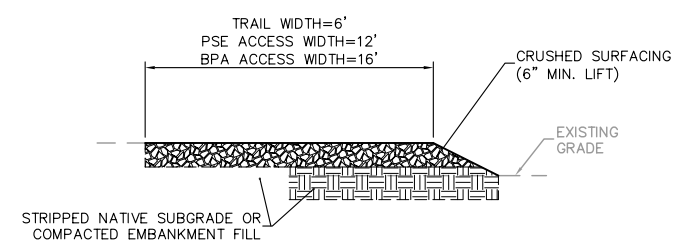

TRAIL AND UTILITY ACCESS DETAIL

6 / C28

NOT TO SCALE

NOTES:

1. FOR POOL LENGTH, LOCATION, AND GRADE CONTROL, SEE PLAN AND PROFILE SHEETS C09–C14 AND SURVEY CONTROL SHEET C06.
2. PLACE 30" BOULDERS SUCH THAT SPACING BETWEEN FACE OF BOULDERS AT CHANNEL BED ELEVATION IS 1.0'. SPACING OF HYDRAULIC CONTROLS SHALL BE 15' MAX. (E.G., BETWEEN BOULDERS 1 AND 2, 7 AND 8, AND 14 AND 15). SPACING BETWEEN OTHER BOULDERS MAY BE WIDER.

DAVID J. CISAKOWSKI — STATE OF WASHINGTON — 30193 — REGISTERED PROFESSIONAL ENGINEER — EXPIRES: 6/9/06

GERALD A. BIBBE — STATE OF WASHINGTON — 24332 — REGISTERED PROFESSIONAL ENGINEER — EXPIRES: 11-03-07

90% Design Review Submittal - Not for Construction

The Watershed Company

MONTGOMERY WATER GROUP, INC.

NO.	REVISION	BY	DATE
–	–	–	–

DESIGNED: DJC | CHECKED: GAB | KENT PROJECT NO. – | SCALE: HORIZ: AS NOTED
DRAWN: DJC | PROJ MANGR: GAB | CONST. MGMT. REVIEW – | VERT: AS NOTED
APPROVED: _____ CITY ENGINEER | DATE 02/13/06

BAR IS ONE INCH ON ORIGINAL DRAWING ADJUST SCALES ACCORDINGLY 0" 1"

KENT WASHINGTON — City of Kent Public Works Department Engineering Division

CHANNEL DETAILS

COW CREEK REALIGNMENT, LAKE MERIDIAN OUTLET, AND WETLAND RESTORATION IMPROVEMENTS

SHEET C31 OF 37

LAKE OUTLET DETAILS.DWG D CISAKOWSKI 02/13/06

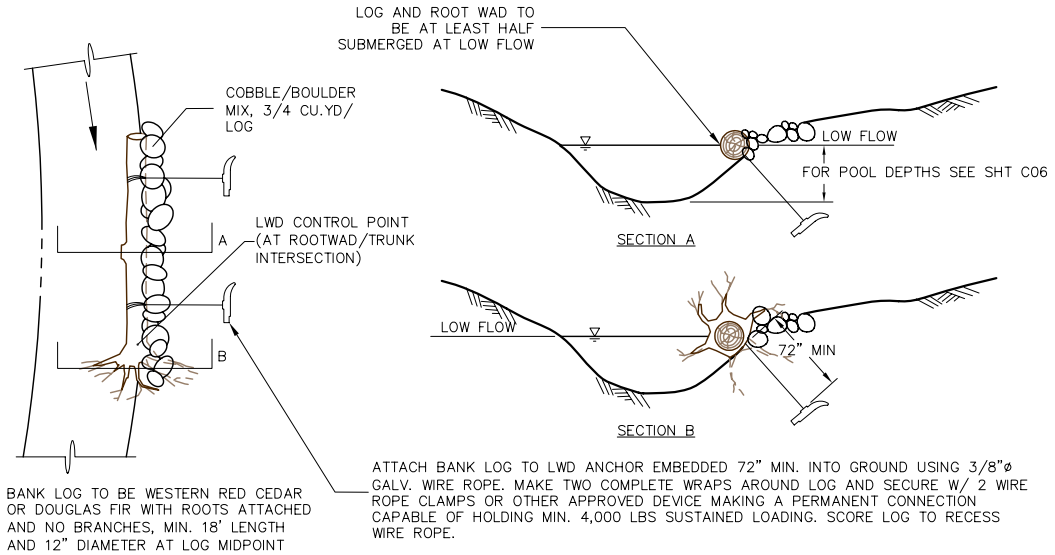

BANK LOG DETAIL

1 / -

0 5' 10'

SCALE: 1"=5'

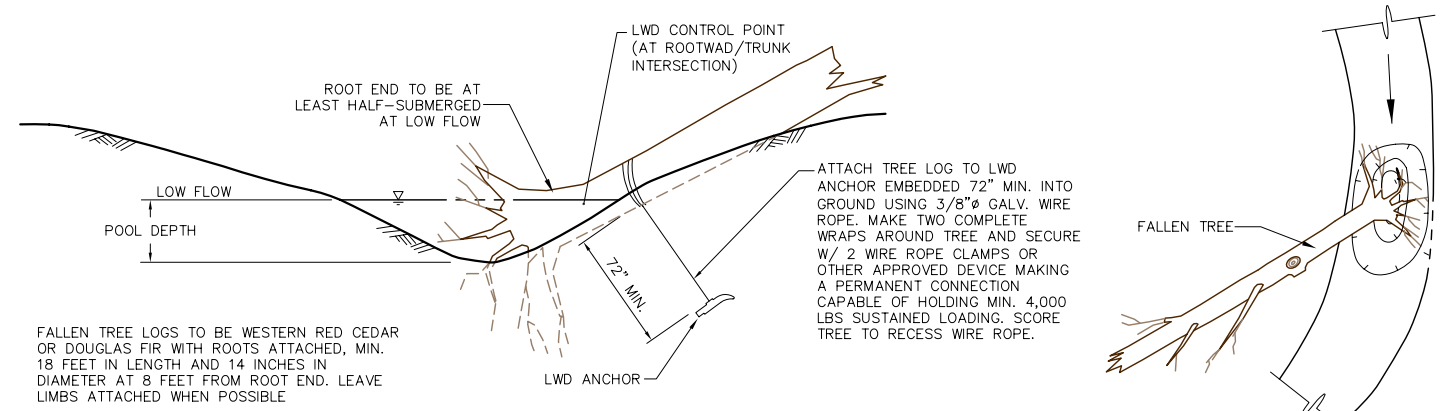

FALLEN TREE DETAIL

3 / -

0 5' 10'

SCALE: 1"=5'

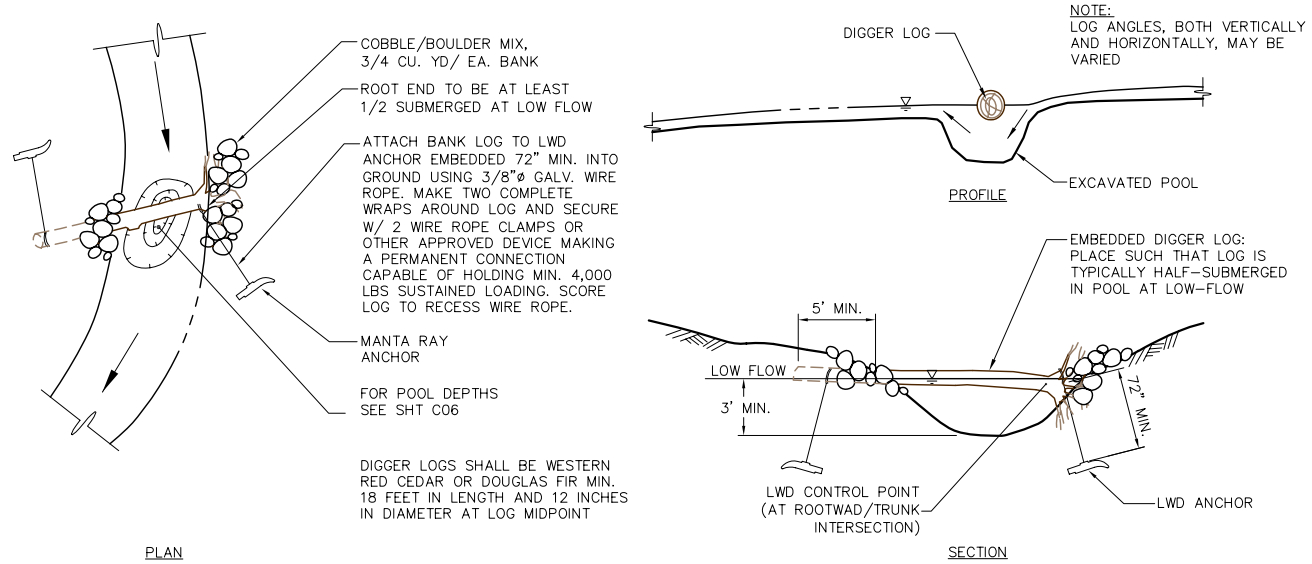

EMBEDDED DIGGER LOG DETAIL

2 / -

0 5' 10'

SCALE: 1"=5'

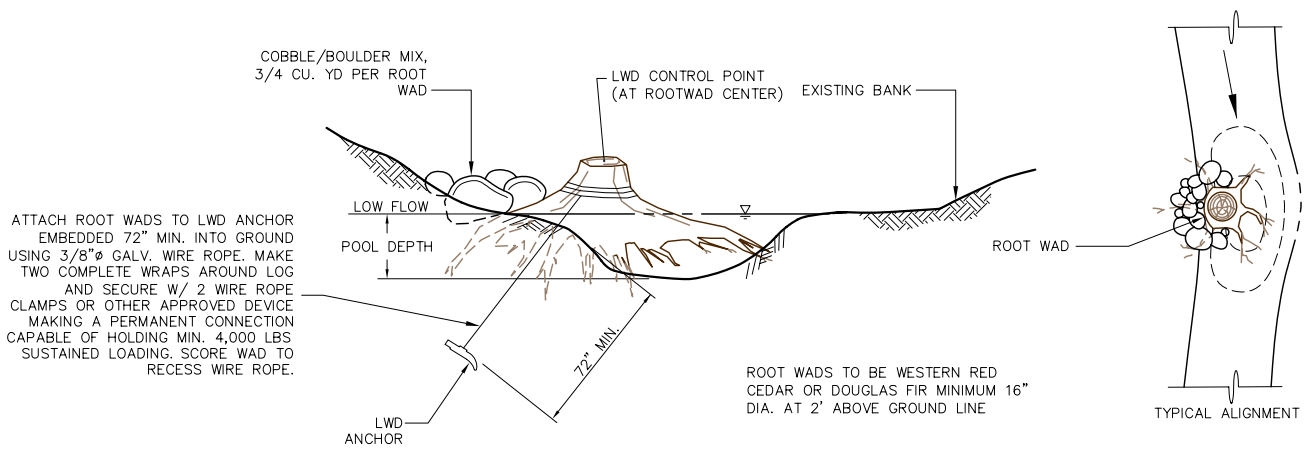

ROOT WAD DETAIL

4 / -

0 5' 10'

SCALE: 1"=5'

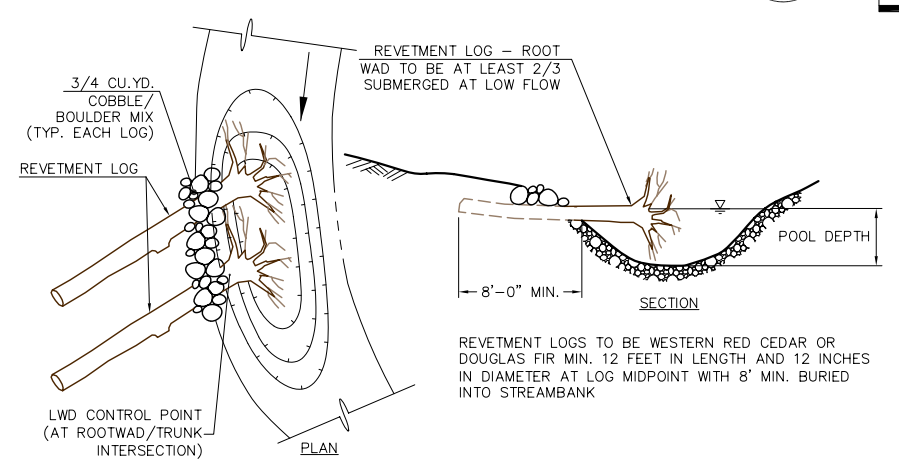

REVETMENT LOG DETAIL

5 / -

0 5' 10'

SCALE: 1"=5'

DAVID J. CISAKOWSKI STATE OF WASHINGTON 30193 REGISTERED PROFESSIONAL ENGINEER - 06 EXPIRES: 6/9/06

GERALD A. BIBBE STATE OF WASHINGTON 24332 REGISTERED PROFESSIONAL ENGINEER - 06 EXPIRES: 11-03-07

90% Design Review Submittal - Not for Construction

The Watershed Company

MONTGOMERY WATER GROUP, INC.

NO.	REVISION	BY	DATE
–	–	–	–

DESIGNED: DJC | CHECKED: GAB | KENT PROJECT NO. – | SCALE: HORIZ: AS NOTED
DRAWN: DJC | PROJ MANGR: GAB | CONST. MGMT. REVIEW – | VERT: AS NOTED
APPROVED: _____ CITY ENGINEER | DATE 02/13/06

BAR IS ONE INCH ON ORIGINAL DRAWING ADJUST SCALES ACCORDINGLY 0" 1"

KENT WASHINGTON

City of Kent
Public Works Department
Engineering Division

LWD DETAILS

COW CREEK REALIGNMENT, LAKE MERIDIAN OUTLET, AND WETLAND RESTORATION IMPROVEMENTS

SHEET C32 OF 37

FILE NO. –

LWD DETAILS D CISAKOWSKI 02/13/06

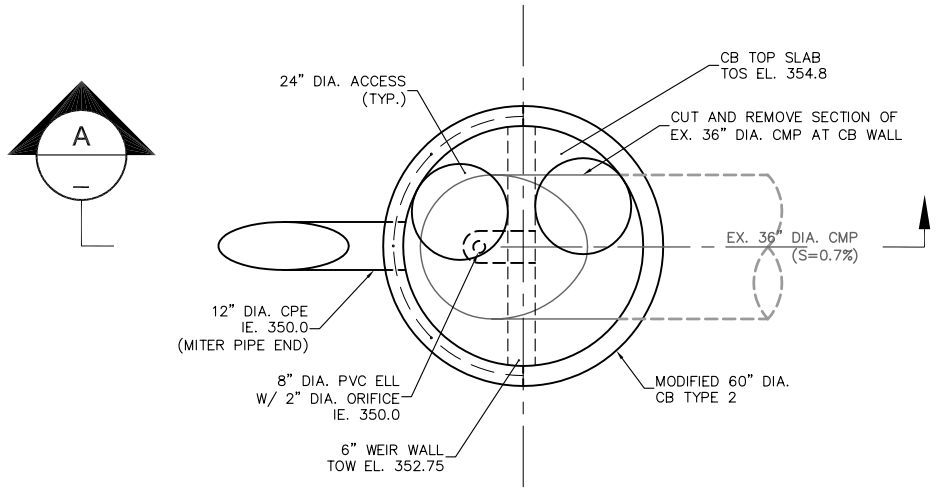

WETLAND C OUTLET IMPROVEMENTS
PLAN DETAIL

1
C24

0 2' 4'
SCALE: 1"=4'

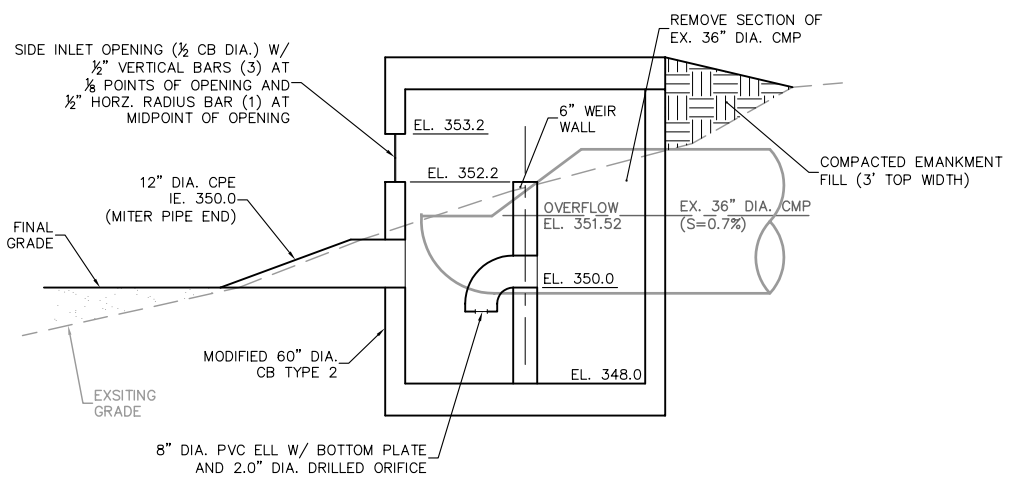

WETLAND C OUTLET IMPROVEMENTS
SECTION

A
-

0 2' 4'
SCALE: 1"=4'

DAVID J. CISAKOWSKI STATE OF WASHINGTON 30193 REGISTERED PROFESSIONAL ENGINEER
05-05-06
EXPIRES: 6/9/06

GERALD A. BIBEE STATE OF WASHINGTON 24332 REGISTERED PROFESSIONAL ENGINEER
05-05-06
EXPIRES: 11-03-07

90% Design Review Submittal - Not for Construction

MONTGOMERY WATER GROUP, INC.

NO.	REVISION	BY	DATE
–	–	–	–

DESIGNED: DJC | CHECKED: GAB | KENT PROJECT NO. –
DRAWN: DJC | PROJ MANGR: GAB | CONST. MGMT. REVIEW –
APPROVED: _____ CITY ENGINEER | DATE 02/13/06

SCALE: HORIZ: AS NOTED VERT: AS NOTED

BAR IS ONE INCH ON ORIGINAL DRAWING ADJUST SCALES ACCORDINGLY
0" 1"

KENT WASHINGTON
City of Kent
Public Works Department
Engineering Division

WETLAND DETAILS

COW CREEK REALIGNMENT,
LAKE MERIDIAN OUTLET, AND
WETLAND RESTORATION IMPROVEMENTS

SHEET C33 OF 37
FILE NO. –

WETLAND PLAN AND SECTION.DWG D CISAKOWSKI 02/13/06

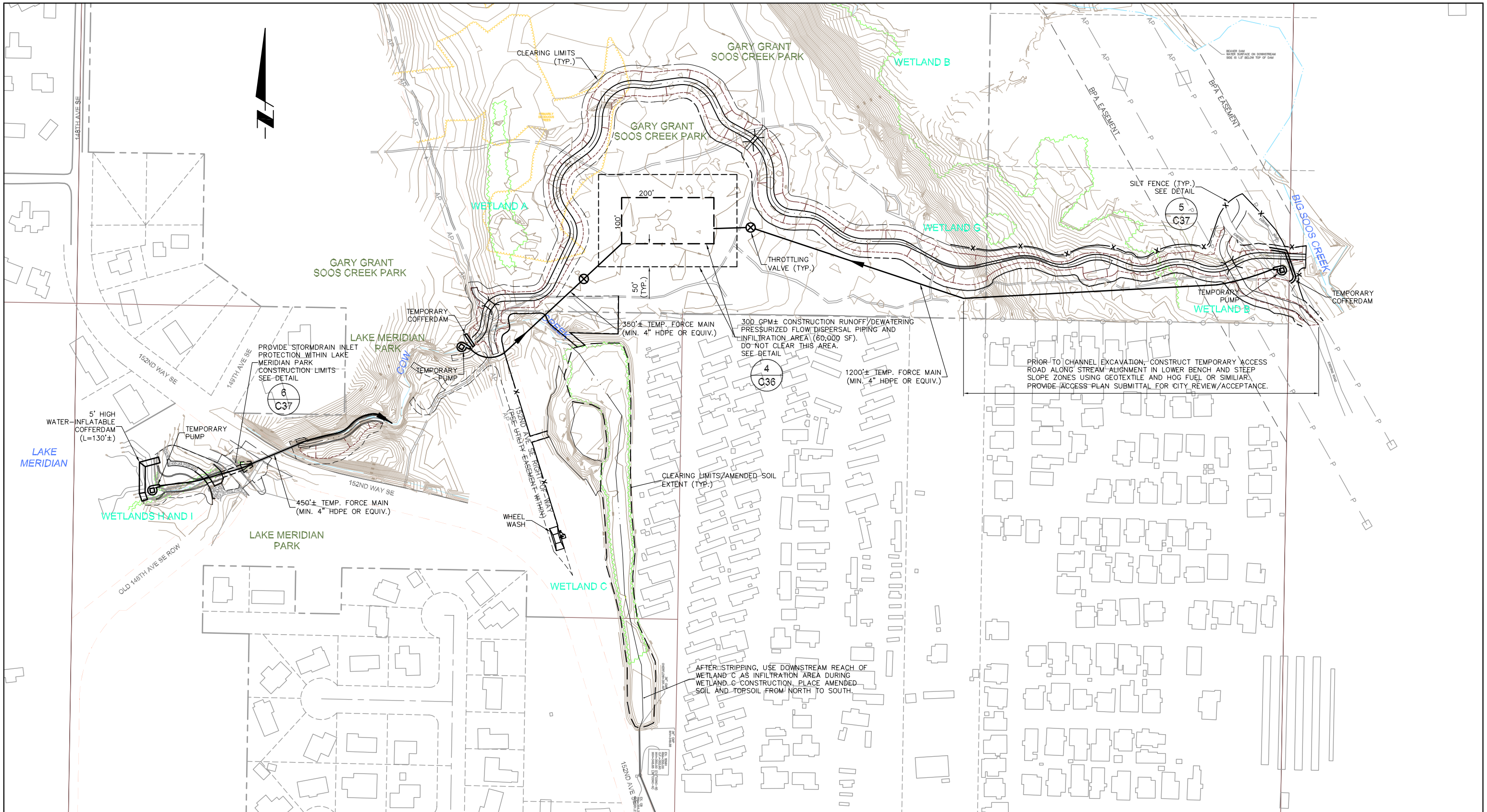

LAKE OUTLET, REALIGNED CHANNEL, AND WETLAND C IMPROVEMENTS
TESC PLAN

0 100' 200'
SCALE: 1"=100'

DAVID J. CISAKOWSKI STATE OF WASHINGTON 30193 REGISTERED PROFESSIONAL ENGINEER -06 EXPIRES: 6/9/06

GERALD A. BIBER STATE OF WASHINGTON 24332 REGISTERED PROFESSIONAL ENGINEER -06 EXPIRES: 11-03-07

90% Design Review Submittal - Not for Construction

MONTGOMERY WATER GROUP, INC.

TESC PLANS.DWG D. CISAKOWSKI 02/13/06

NO.	REVISION	BY	DATE
–	–	–	–

DESIGNED: DJC | CHECKED: GAB | KENT PROJECT NO. –
DRAWN: DJC | PROJ MANGR: GAB | CONST. MGMT. REVIEW –
APPROVED: _____ CITY ENGINEER | DATE 02/13/06
SCALE: HORIZ: AS NOTED VERT: AS NOTED
BAR IS ONE INCH ON ORIGINAL DRAWING ADJUST SCALES ACCORDINGLY 0" 1"

KENT WASHINGTON
City of Kent
Public Works Department
Engineering Division

CONCEPTUAL TESC AND CARE/DIVERSION OF WATER PLAN NORTH

COW CREEK REALIGNMENT, LAKE MERIDIAN OUTLET, AND WETLAND RESTORATION IMPROVEMENTS

SHEET C34 OF 37
FILE NO. –

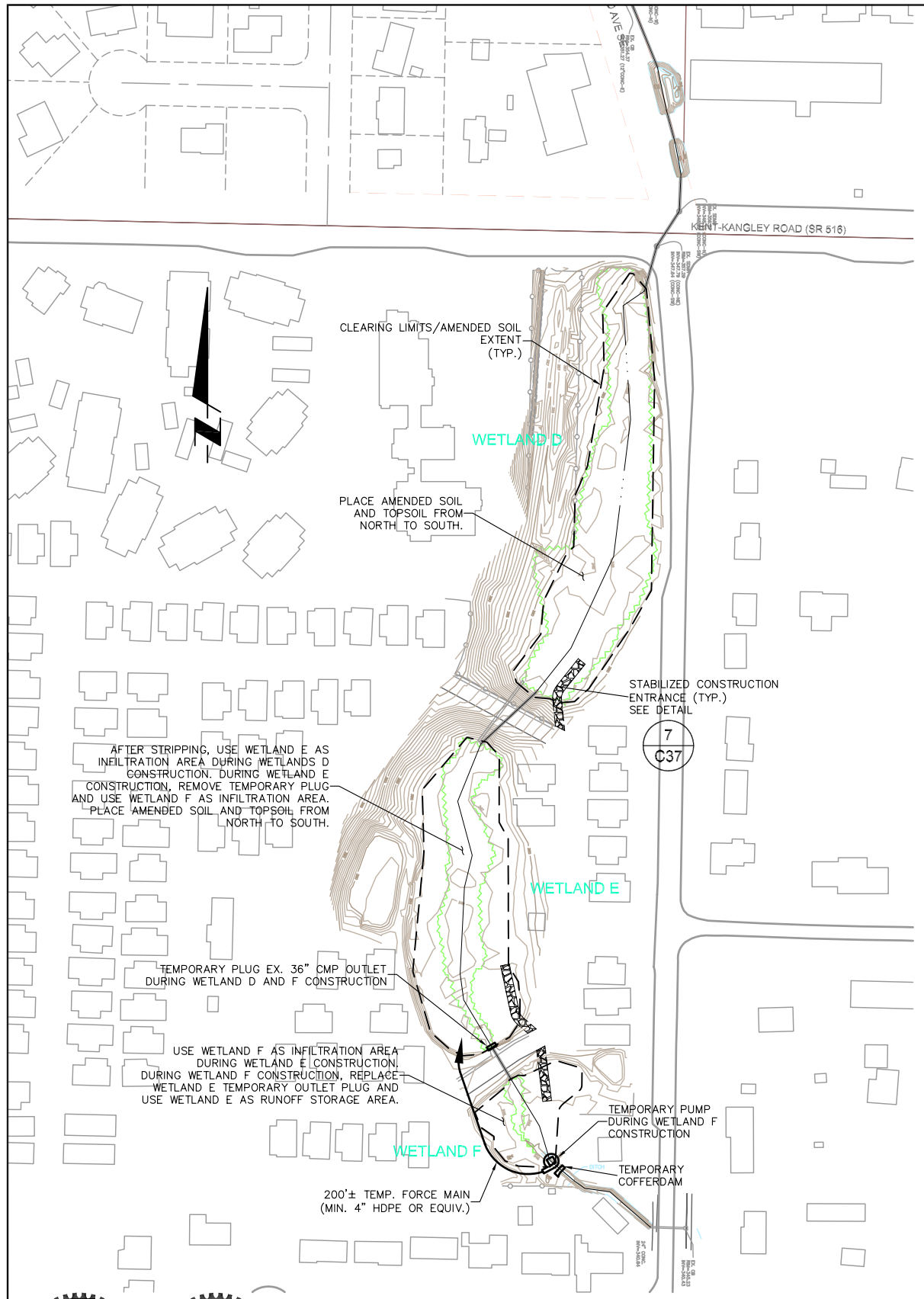

TEMPORARY EROSION AND SEDIMENTATION CONTROL PLAN NOTES

1. THE TEMPORARY EROSION AND SEDIMENT CONTROL (TESC) PLAN DRAWINGS SHOWN ARE CONCEPTUAL. THE CONTRACTOR IS REQUIRED TO SUBMIT A DETAILED STORMWATER POLLUTION PREVENTION PLAN (SWPPP) TO THE CITY PER THE REQUIREMENTS OF THE CONTRACT DOCUMENTS. THE SUBMITTED SWPPP SHALL BE INCLUSIVE OF A SPILL PREVENTION CONTROL AND COUNTERMEASURES (SPCC) PLAN AND ASSOCIATED TEMPORARY EROSION AND SEDIMENTATION CONTROL (TESC) PLAN.

2. APPROVAL OF SWPPP DOES NOT CONSTITUTE AN APPROVAL OF PERMANENT ROAD OR DRAINAGE DESIGN.

3. THE IMPLEMENTATION OF THE SWPPP AND THE CONSTRUCTION, MAINTENANCE, REPLACEMENT AND UPGRADING OF SWPPP RELATED FACILITIES IS THE RESPONSIBILITY OF THE CONTRACTOR UNTIL ALL CONSTRUCTION IS COMPLETED AND APPROVED.

4. THE BOUNDARIES OF THE CLEARING LIMITS SHOWN ON THESE DRAWINGS SHALL BE CLEARLY FLAGGED IN THE FIELD PRIOR TO CONSTRUCTION. DURING THE CONSTRUCTION PERIOD, NO DISTURBANCE BEYOND THE FLAGGED CLEARING LIMITS SHALL BE PERMITTED. THE FLAGGING SHALL BE MAINTAINED BY THE APPLICANT/CONTRACTOR FOR THE DURATION OF THE CONSTRUCTION.

5. ALL SWPPP RELATED FACILITIES SHOWN ON THE CONTRATOR-SUBMITTED PLAN MUST BE CONSTRUCTED PRIOR TO ALL CLEARING AND GRADING ACTIVITIES, AND IN SUCH A MANNER TO INSURE THAT SEDIMENT LADEN WATER DOES NOT ENTER THE DRAINAGE SYSTEM OR VIOLATE APPLICABLE WATER STANDARDS.

6. THE SWPPP RELATED FACILITIES SHOWN ON THE CONTRACTOR-SUBMITTED PLAN ARE TO BE CONSIDERED THE MINIMUM REQUIREMENTS FOR ANTICIPATED SITE CONDITIONS. DURING THE CONSTRUCTION PERIOD, THESE TESCP FACILITIES SHALL BE UPGRADED AS NEEDED FOR UNEXPECTED STORM EVENTS AND AS THE CITY REQUIRES.

7. THE SWPPP RELATED FACILITIES SHALL BE INSPECTED DAILY BY THE CONTRACTOR AND MAINTAINED AS NECESSARY TO ENSURE THEIR CONTINUED FUNCTIONING AND OPERATION.

8. ANY AREA STRIPPED OF VEGETATION, INCLUDING ROADWAY EMBANKMENTS, WHERE NO FURTHER WORK IS ANTICIPATED FOR A PERIOD OF TWO DAYS, SHALL BE IMMEDIATELY STABILIZED WITH THE APPROVED TESC METHODS SUCH SEEDING, MULCHING, NETTING, EROSION CONTROL BLANKETS, ETC. GRASS SEEDING ALONE WILL BE ACCEPTABLE ONLY BETWEEN APRIL 1 AND OCTOBER 31.

9. ANY AREA NEEDING TESC MEASURES, NOT REQUIRING IMMEDIATE ATTENTION, SHALL BE ADDRESSED WITHIN 15 DAYS.

11. THE SWPPP RELATED FACILITIES ON INACTIVE SITES SHALL BE INSPECTED AND MAINTAINED A MINIMUM OF ONCE A MONTH OR WITHIN 48 HOURS FOLLOWING A STORM EVENT AND AS THE CITY DEEMS NECESSARY.

12. AT NO TIME SHALL MORE THAN ONE FOOT OF SEDIMENT BE ALLOWED TO ACCUMULATE WITHIN A CATCH BASIN. ALL CATCH BASINS AND CONVEYANCE LINES SHALL BE CLEANED PRIOR TO PAVING. THE CLEANING OPERATION SHALL NOT FLUSH SEDIMENT LADEN WATER INTO THE DOWNSTREAM SYSTEM.

13. STABILIZED CONSTRUCTION ENTRANCES PER CITY STANDARDS AND WHEEL WASH PER ECOLOGY STANDARDS, SHALL BE INSTALLED AT THE BEGINNING OF CONSTRUCTION AND MAINTAINED FOR THE DURATION OF THE PROJECT. ADDITIONAL MEASURES MAY BE REQUIRED TO INSURE THAT ALL PAVED AREAS ARE KEPT CLEAN FOR THE DURATION OF THE PROJECT.

14. BETWEEN NOVEMBER 1 AND MARCH 31, DISTURBED AREAS THAT ARE TO BE LEFT UNWORKED FOR MORE THAN TWO DAYS SHALL BE COVERED BY MULCH, SOD OR PLASTIC COVERING.

15. WHERE SEEDING FOR TEMPORARY EROSION CONTROL IS REQUIRED, THE APPROPRIATE MIXTURE SHOWN ON THE LANDSCAPING PLANS WILL BE USED FOR THE TYPE OF AREA DISTURBED.

16. WHERE STRAW MULCH FOR TEMPORARY EROSION IS REQUIRED, IT SHALL BE APPLIED AT A MINIMUM THICKNESS OF 3 INCHES OR 3,000 POUNDS PER ACRE.

17. AS CONSTRUCTION PROGRESSES AND UNEXPECTED SEASONAL CONDITIONS DICTATE, AND AS THE CITY REQUIRES, THE PERMITTEE SHOULD ANTICIPATE THAT MORE TESC MEASURES WILL BE NECESSARY TO PROTECT ADJACENT PROPERTIES AND ENSURE WATER QUALITY STANDARDS FOR SITE RUNOFF. IT SHALL BE THE RESPONSIBILITY OF THE CONTRACTOR TO ADDRESS DEFICIENT TESC CONDITIONS AND PROVIDE ADDITIONAL FACILITIES, OVER AND ABOVE MINIMUM REQUIREMENTS OUTLINED ON THE CONTRACTOR-SUBMITTED PLAN.

MINIMUM REQUIRED BMPS FOR BASE LEVEL TESC

1. CLEARLY FLAG THE CLEARING LIMITS AND INSTALL FILTER FENCES WHERE SHOWN ON THE CONTRACT DRAWINGS AND AT OTHER SUPPLEMENTAL AREAS (E.G., STOCKPILE AREAS) AS REQUIRED.
2. INSTALL A TRUCK WHEEL WASH AT THE MAIN CONSTRUCTION ACCESS ENTRANCE NORTH OF 152ND AVE SE AT THE RIGHT-OF-WAY EXTENSION (WEST OF WETLAND C) TO PREVENT TRACKING OF SEDIMENT INTO THE ROAD RIGHT-OF-WAY. INSTALL STABILIZED CONSTRUCTION ENTRANCES AT OTHER PUBLIC AND PRIVATE RIGHT-OF-WAY INTERSECTIONS WHERE CONSTRUCTION ACCESS IS SHOWN ON THE CONTRACT DRAWINGS.
3. INSTALL SILT FENCES, COFFERDAMS, TEMPORARY SUMPS, AND SEDIMENT RETENTION DEVICES WHERE SHOWN OR AT OTHER REQUIRED LOCATIONS PRIOR TO THE START OF EARTHWORK ACTIVITIES.
4. INSTALL STORM DRAIN INLET PROTECTION FOR CATCH BASINS AND INLETS TO CONTROL SEDIMENT-LADEN RUNOFF FROM ENTERING THE STORM DRAIN SYSTEM.
5. INSTALL TEMPORARY PUMPS, FORCE MAINS, THROTTLING VALVES AND FLOW DISPERSAL PIPING. ROUTE DEWATERING WATER AND CONSTRUCTION AREA RUNOFF/RUN-ON TO SUMP COLLECTION AREAS FOR PUMPED CONVEYANCE TO FLOW DISPERSAL FACILITIES. TEST AND CONFIRM DEWATERING AND RUNOFF CONTROL TEMPORARY FACILITIES PROPER OPERATION PRIOR STORM EVENTS.
6. AFTER CLEARING AND GRUBBING, CONSTRUCT TEMPORARY ACCESS ROADS ALONG THE STREAM CORRIDOR ALIGNMENT WITHIN THE CLEARING LIMITS USING GEOTEXTILE AND HOG FUEL, OR APPROVED ALTERNATIVE APPROACH.
7. ALL GRADING WORK SHALL BE SCHEDULED BETWEEN MAY 1 AND SEPTEMBER 30.
8. STAGING AND TEMPORARY STOCKPILE AREAS ARE TO BE CONTAINED ON-SITE UNLESS APPROVED BY THE ENGINEER.
9. INSTALL TEMPORARY COVER MEASURES ON UNWORKED SOILS DURING CONSTRUCTION. FROM OCTOBER 1 TO APRIL 30, NO UNWORKED SOIL SHALL REMAIN EXPOSED FOR MORE THAN 48 HOURS (INCLUDING ALL CALENDAR DAYS, HOLIDAYS AND SUNDAYS). FROM MAY 1 THROUGH SEPTEMBER 30, NO UNWORKED SOIL SHALL REMAIN EXPOSED FOR MORE THAN 7 DAYS, ALTHOUGH SUPPLEMENTAL MEASURES MAY BE REQUIRED DURING STORM EVENTS. TEMPORARY COVER MEASURES MAY INCLUDE STRAW MULCH, PLASTIC SHEETING, POLYACRYLAMIDE (PAM) OR OTHER ACCEPTABLE SOIL-STRENGTHENING AGENT, AND/OR HYDROSEEDING AS APPROVED BY THE CITY.
10. MAINTAIN EROSION CONTROL FACILITIES. REMOVE ACCUMULATED SILT BEHIND SILT FENCING AND CHECK DAMS PRIOR TO THEIR REMOVAL AND DISPOSE OF IT IN ACCORDANCE WITH ALL APPLICABLE LOCAL, STATE, AND FEDERAL LAWS.
11. PROVIDE FOR THE CLEANING OF ALL SURFACED ROADWAYS AS A RESULT OF THE EXECUTION OF THE WORK OF THIS PROJECT. FLUSHING SHALL NOT BE USED. VACUUM TYPE SWEEPERS ARE REQUIRED.
12. TAKE NECESSARY PRECAUTIONS TO PREVENT ANY CEMENT CONCRETE OR BY-PRODUCTS, ASPHALT CONCRETE OR BYPRODUCTS, OR ANY DISCHARGE FROM SAW CUTTING FROM BEING DISCHARGED INTO ANY STORM DRAIN OR SURFACE WATER SYSTEM.
13. INSTALL PERMANENT COVER MEASURES FOR COMPLETE SOILS STABILIZATION AS SOON AS POSSIBLE AFTER EARTHWORK OPERATIONS ARE COMPLETED.

CONSTRUCTION SEQUENCING

CONSTRUCTION SEQUENCING NOTES WILL BE PREPARED WITH THE 100% SUBMITTAL.

DAVID J. CISAKOWSKI — STATE OF WASHINGTON — 30193 — REGISTERED PROFESSIONAL ENGINEER — EXPIRES: 6/9/06

GERALD A. BIBER — STATE OF WASHINGTON — 24332 — REGISTERED PROFESSIONAL ENGINEER — EXPIRES: 11-03-07

WETLANDS D, E, AND F IMPROVEMENTS TESC PLAN

0 100' 200'
SCALE: 1"=100'

90% Design Review Submittal - Not for Construction

MONTGOMERY WATER GROUP, INC.

NO.	REVISION	BY	DATE
–	–	–	–

DESIGNED: DJC | CHECKED: GAB | KENT PROJECT NO. –
DRAWN: DJC | PROJ MANGR: GAB | CONST. MGMT. REVIEW –
APPROVED: _____ CITY ENGINEER
SCALE: HORIZ: AS NOTED VERT: AS NOTED
DATE 02/13/06
BAR IS ONE INCH ON ORIGINAL DRAWING ADJUST SCALES ACCORDINGLY 0" 1"

City of Kent Public Works Department Engineering Division

CONCEPTUAL TESC AND CARE/DIVERSION OF WATER PLAN SOUTH

COW CREEK REALIGNMENT, LAKE MERIDIAN OUTLET, AND WETLAND RESTORATION IMPROVEMENTS

SHEET C35 OF 37
FILE NO. –

TESC PLANS.DWG D CISAKOWSKI 02/13/06

MULCH MATERIAL	QUALITY STANDARDS	APPLICATION RATES	REMARKS
STRAW	AIR-DRIED; FREE FROM UNDESIRABLE SEED AND COARSE MATERIAL	2"-3" THICK; 2-3 BALES PER 1000 SF OR 2-3 TONS PER ACRE	COST-EFFECTIVE PROTECTION WHEN APPLIED WITH ADEQUATE THICKNESS. HAND-APPLICATION GENERALLY REQUIRES GREATER THICKNESS THAN BLOWN STRAW. STRAW SHOULD BE CRIMPED TO AVOID WIND BLOW. THE THICKNESS OF STRAW MAY BE REDUCED BY HALF WHEN USED IN CONJUNCTION WITH SEEDING.
WOOD FIBER CELLULOSE	NO GROWTH INHIBITING FACTORS	APPROX. 25-30 LBS PER 1000 SF OR 1000-1500 LBS PER ACRE	SHALL BE APPLIED WITH HYDROMULCHER. SHALL NOT BE USED WITHOUT SEED AND TACKIFIER UNLESS THE APPLICATION RATE IS AT LEAST DOUBLED. SOME WOOD FIBER WITH VERY LONG FIBERS CAN BE EFFECTIVE AT LOWER APPLICATION RATES AND WITHOUT SEED OR TACKIFIER.
COMPOST	NO VISIBLE WATER OR DUST DURING HANDLING. MUST BE PURCHASED FROM SUPPLIER WITH SOLID WASTE HANDLING PERMIT.	2" THICK MIN.; APPROX. 100 TONS PER ACRE (APPROX. 800 LBS PER YARD)	MORE EFFECTIVE CONTROL CAN BE OBTAINED BY INCREASING THICKNESS TO 3". EXCELLENT MULCH FOR PROTECTING FINAL GRADES UNTIL LANDSCAPING BECAUSE IT CAN BE DIRECTLY SEEDED OR TILLED INTO SOIL AS AN AMENDMENT.
CHIPPED SITE VEGETATION	AVERAGE SIZE SHALL BE SEVERAL INCHES.	2" MINIMUM THICKNESS	THIS IS A COST-EFFECTIVE WAY TO DISPOSE OF DEBRIS FROM CLEARING AND GRUBBING, AND IT ELIMINATES THE PROBLEMS ASSOCIATED WITH BURNING. GENERALLY, IT SHOULD NOT BE USED ON SLOPES ABOVE APPROX. 10% BECAUSE OF ITS TENDENCY TO BE TRANSPORTED BY RUNOFF. IT IS NOT RECOMMENDED WITHIN 200 FEET OF SURFACE WATERS. IF SEEDING IS EXPECTED SHORTLY AFTER MULCH, THE DECOMPOSITION OF THE CHIPPED VEGETATION MAY TIE UP NUTRIENTS IMPORTANT TO GRASS ESTABLISHMENT.

MULCH APPLICATION

AS A TEMPORARY COVER MEASURE, MULCH SHOULD BE USED:
- ON DISTURBED AREAS THAT REQUIRE COVER MEASURES FOR LESS THAN 30 DAYS. INSPECT AND REAPPLY AS NEEDED EVERY 30 DAYS.
- AS A COVER FOR SEED DURING THE WET SEASON AND DURING THE HOT SUMMER MONTHS.
- DURING THE WET SEASON ON SLOPES STEEPER THAN 3H:1V WITH MORE THAN 10 FEET OF VERTICAL RELIEF.

MAINTENANCE STANDARDS
- THE THICKNESS OF THE COVER MUST BE MAINTAINED.
- ANY AREAS THAT EXPERIENCE EROSION SHALL BE REMULCHED AND/OR PROTECTED WITH A NET OR BLANKET. IF THE EROSION PROBLEM IS DRAINAGE RELATED, THEN THE PROBLEM SHALL BE FIXED AND THE ERODED AREA REMULCHED.

1 / –

MULCH

NOT TO SCALE

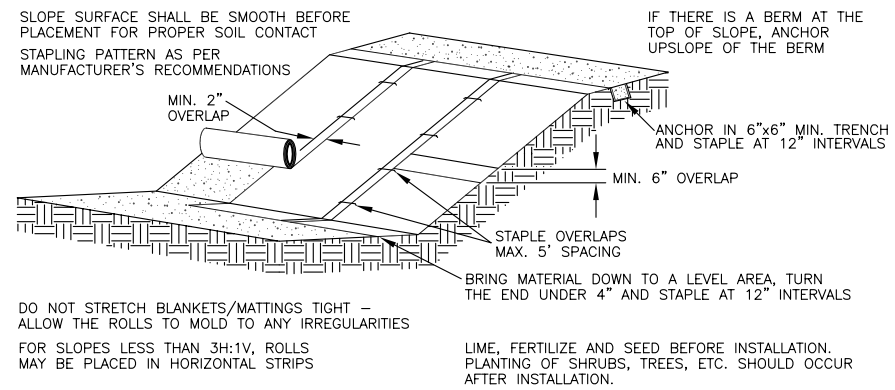

JUTE MAT / EROSION BLANKET INSTALLATION
- USE ON DISTURBED AREAS SLOPING MORE THAN 10% FOR WET SEASON, OR MORE THAN 30% FOR DRY SEASON STABILIZATION.
- JUTE MATTING MUST BE USED IN CONJUNCTION WITH MULCH. EROSION BLANKETS MAY BE INSTALLED WITHOUT MULCH.
- SYNTHETIC EROSION BLANKETS SHALL NOT BE USED, EXCEPT FOR TEMPORARY USE WHERE THE BLANKET WILL BE REMOVED, OR FOR USE IN WATERWAYS FOR LONG TERM STABILIZATION.

MAINTENANCE STANDARDS
- GOOD CONTACT WITH THE GROUND MUST BE MAINTAINED, AND THERE MUST BE NO EROSION BENEATH THE NET OR BLANKET.
- ANY AREAS OF NET OR BLANKET THAT ARE DAMAGED OR NOT IN CLOSE CONTACT WITH THE GROUND SHALL BE REPAIRED AND STAPLED.
- IF EROSION OCCURS DUE TO POORLY CONTROLLED DRAINAGE, THE PROBLEM SHALL BE FIXED AND THE ERODED AREA STABILIZED.

3 / –

JUTE MAT/EROSION BLANKET DETAIL

NOT TO SCALE

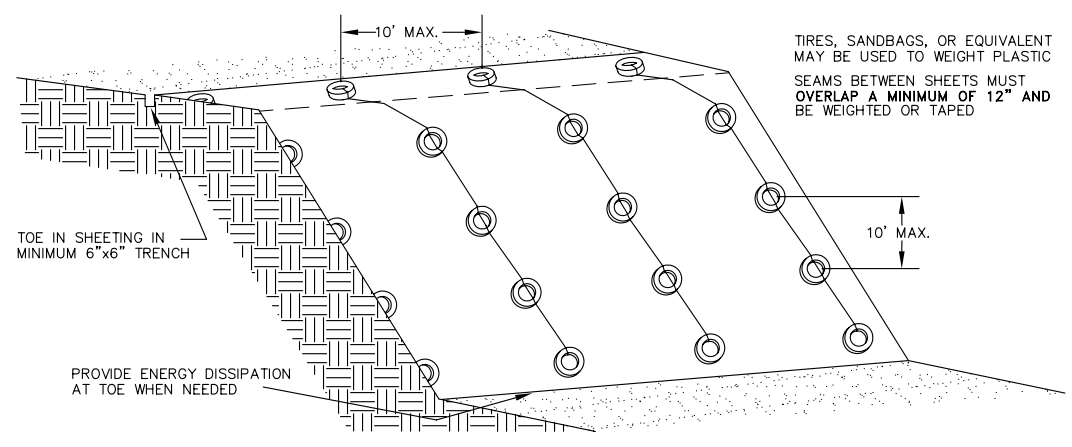

PLASTIC SHEETING INSTALLATION
- PLASTIC SHEETING SHALL HAVE A MINIMUM THICKNESS OF 0.06 MILLIMETERS.
- IF EROSION AT THE TOE OF SLOPE IS LIKELY, A GRAVEL BERM, RIPRAP, OR OTHER SUITABLE PROTECTION SHALL BE INSTALLED AT THE TOE OF SLOPE IN ORDER TO REDUCE THE VELOCITY OF RUNOFF.

MAINTENANCE STANDARDS
- TORN SHEETS MUST BE REPLACED AND OPEN SEAMS REPAIRED.
- IF THE PLASTIC BEGINS TO DETERIORATE DUE TO ULTRAVIOLET RADIATION, IT MUST BE COMPLETELY REMOVED AND REPLACED.
- WHEN THE PLASTIC IS NO LONGER NEEDED, IT SHALL BE COMPLETELY REMOVED.

2 / –

PLASTIC SHEETING DETAIL

NOT TO SCALE

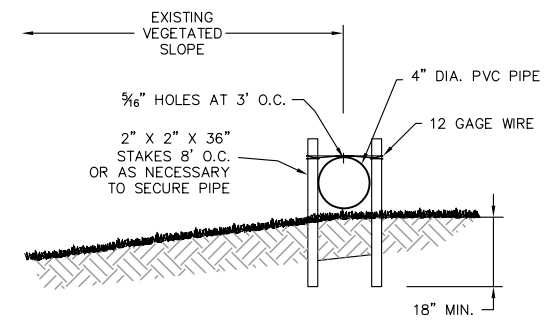

LEVEL DISPERSAL PIPE INSTALLATION
- USE ABOVE UNDISTURBED AREAS THAT ARE STABILIZED BY EXISTING VEGETATION.
- IF THE LEVEL DISPERSAL PIPE HAS ANY LOW POINTS, FLOW WILL CONCENTRATE, CREATE CHANNELS AND MAY CAUSE EROSION. SUPPORT LOW POINTS WITH ADDITIONAL STAKES AND WIRE OR WITH SANDBAGS UNDER THE PIPE SO THAT THE PIPE MEETS THE GRADE CRITERIA OF LEVEL ±0.2'.
- DISCHARGE AREA BELOW THE OUTLET MUST BE UNIFORM WITH A SLOPE OF LESS THAN 20%, OR BE APPROVED BY THE CITY OF KENT INSPECTOR.
- OUTLET TO BE CONSTRUCTED LEVEL IN A STABLE, UNDISTURBED SOIL (NOT ON FILL).
- THE RUNOFF SHALL NOT RECONCENTRATE AFTER RELEASE UNLESS INTERCEPTED BY ANOTHER DOWNSTREAM MEASURE.
- THE GRADE OF THE LEVEL SPREADER SHALL BE FLAT (0%) TO ENSURE UNIFORM SPREAD OF STORM WATER FLOW. VARIANCE ACROSS THE LENGTH OF THE LEVEL DISPERSAL PIPE SHALL NOT EXCEED 0.2 FEET.
- THE MINIMUM PIPE DIAMETER FOR USE AS A LEVEL DISPERSAL PIPE SHALL BE 6 INCHES, OR THE SIZE OF THE INLET PIPE AS SHOWN ON THE PLANS.

MAINTENANCE STANDARDS
- THE DISPERSAL PIPE SHALL BE INSPECTED AFTER EVERY RUNOFF EVENT TO ENSURE THAT IT IS FUNCTIONING CORRECTLY.
- THE CONTRACTOR SHOULD AVOID THE PLACEMENT OF ANY MATERIAL ON AND SHOULD PREVENT CONSTRUCTION TRAFFIC FROM CROSSING OVER THE DISPERSAL PIPE.
- IF THE DISPERSAL PIPE IS DAMAGED BY CONSTRUCTION TRAFFIC, IT SHALL BE IMMEDIATELY REPAIRED.
- ANY ERODED AREAS SHALL BE IMMEDIATELY STABILIZED; THE CAUSE OF THE EROSION SHALL BE DETERMINED AND IF POSSIBLE CORRECTED. IF EROSION IS RECURRENT AND THE DESIGN AND CONSTRUCTION OF THE SYSTEM IS NOT ADEQUATE TO PREVENT EROSION, A NEW METHOD OF RELEASING RUNOFF SHALL BE DESIGNED, APPROVED BY A CITY INSPECTOR, AND INSTALLED.

4 / C34

PRESSURE DISPSERAL SYSTEM DETAIL

NOT TO SCALE

DAVID J. CISAKOWSKI, STATE OF WASHINGTON, 30193, REGISTERED PROFESSIONAL ENGINEER, EXPIRES: 6/9/06

GERALD A. BIBLE, STATE OF WASHINGTON, 24352, REGISTERED PROFESSIONAL ENGINEER, EXPIRES: 11-03-07

90% Design Review Submittal - Not for Construction

MONTGOMERY WATER GROUP, INC.

TESC PLANS.DWG D CISAKOWSKI 02/13/06

NO.	REVISION	BY	DATE
–	–	–	–

DESIGNED: DJC | CHECKED: GAB | KENT PROJECT NO. – | SCALE: HORIZ: AS NOTED, VERT: AS NOTED
DRAWN: DJC | PROJ MANGR: GAB | CONST. MGMT. REVIEW – | BAR IS ONE INCH ON ORIGINAL DRAWING ADJUST SCALES ACCORDINGLY 0" 1"
APPROVED: _____ CITY ENGINEER | DATE 02/13/06

KENT WASHINGTON — City of Kent, Public Works Department, Engineering Division

TESC DETAILS

COW CREEK REALIGNMENT, LAKE MERIDIAN OUTLET, AND WETLAND RESTORATION IMPROVEMENTS

SHEET C36 OF 37

FILE NO. –

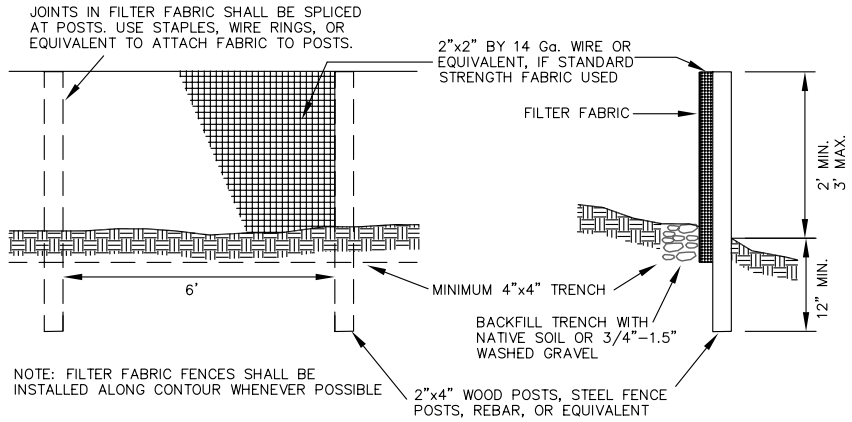

FILTER FABRIC FENCE INSTALLATION

- MAXIMUM SLOPE STEEPNESS (NORMAL (PERPENDICULAR) TO FENCE LINE) 1:1.
- MAXIMUM SHEET OR OVERLAND FLOW PATH LENGTH TO THE FENCE 100 FEET.
- NO CONCENTRATED FLOWS GREATER THAN 0.5 CFS.
- FABRIC MIRAFI 100X OR EQUIVALENT
- THE FILTER FABRIC SHALL BE PURCHASED IN A CONTINUOUS ROLL CUT TO THE LENGTH OF THE BARRIER TO AVOID USE OF JOINTS. WHEN JOINTS ARE NECESSARY, FILTER CLOTH SHALL BE SPLICED TOGETHER ONLY AT A SUPPORT POST, WITH A MINIMUM 6 INCH OVERLAP, AND BOTH ENDS SECURELY FASTENED TO THE POST.
- POSTS SHALL BE SPACED A MAXIMUM OF 6 FEET APART AND DRIVEN SECURELY INTO THE GROUND A MINIMUM OF 18 INCHES. A MINIMUM DEPTH OF 12 INCHES IS ALLOWED IF TOPSOIL OR OTHER SOFT SOIL IS NOT PRESENT AND A MINIMUM DEPTH OF 18 INCHES CANNOT BE REACHED. FENCE POST DEPTHS SHALL BE INCREASED BY 6 INCHES IF THE FENCE IS LOCATED ON SLOPES OF 3:1 OR STEEPER.
- A TRENCH SHALL BE EXCAVATED APPROXIMATELY 4 INCHES WIDE AND 4 INCHES DEEP ALONG THE LINE OF POSTS AND UPSLOPE FROM THE BARRIER. THE TRENCH SHALL BE CONSTRUCTED TO FOLLOW THE CONTOUR.
- A WIRE MESH SUPPORT FENCE SHALL BE FASTENED SECURELY TO THE UPSLOPE SIDE OF THE POSTS USING HEAVY-DUTY WIRE STAPLES AT LEAST 1 INCH LONG, TIE WIRES OR HOG RINGS. THE WIRE SHALL EXTEND INTO THE TRENCH A MINIMUM OF 4 INCHES AND SHALL NOT EXTEND MORE THAN 36 INCHES ABOVE THE ORIGINAL GROUND SURFACE.
- THE FILTER FABRIC SHALL BE WIRED TO THE FENCE, AND 4 INCHES OF THE FABRIC SHALL EXTEND INTO THE TRENCH. THE FABRIC SHALL NOT EXTEND MORE THAN 36 INCHES ABOVE THE ORIGINAL GROUND SURFACE.
- FILTER FABRIC SHALL NOT BE STAPLED TO EXISTING TREES. OTHER TYPES OF FABRIC MAY BE STAPLED TO THE FENCE.

MAINTENANCE STANDARDS

- ANY DAMAGE SHALL BE REPAIRED IMMEDIATELY.
- IF CONCENTRATED FLOWS ARE EVIDENT UPHILL OF THE FENCE, THEY MUST BE INTERCEPTED AND CONVEYED TO A SEDIMENT TRAP OR POND.
- IT IS IMPORTANT TO CHECK THE UPHILL SIDE OF THE FENCE FOR SIGNS OF THE FENCE CLOGGING AND ACTING AS A BARRIER TO FLOW AND THEN CAUSING CHANNELIZATION OF FLOWS PARALLEL TO THE FENCE. IF THIS OCCURS, REPLACE THE FENCE OR REMOVE THE TRAPPED SEDIMENT.
- SEDIMENT MUST BE REMOVED WHEN THE SEDIMENT IS 6 INCHES HIGH.
- IF THE FILTER FABRIC (GEOTEXTILE) HAS DETERIORATED DUE TO ULTRAVIOLET BREAKDOWN, IT SHALL BE REPLACED.

SILT FENCE DETAIL

5 / C34

NOT TO SCALE

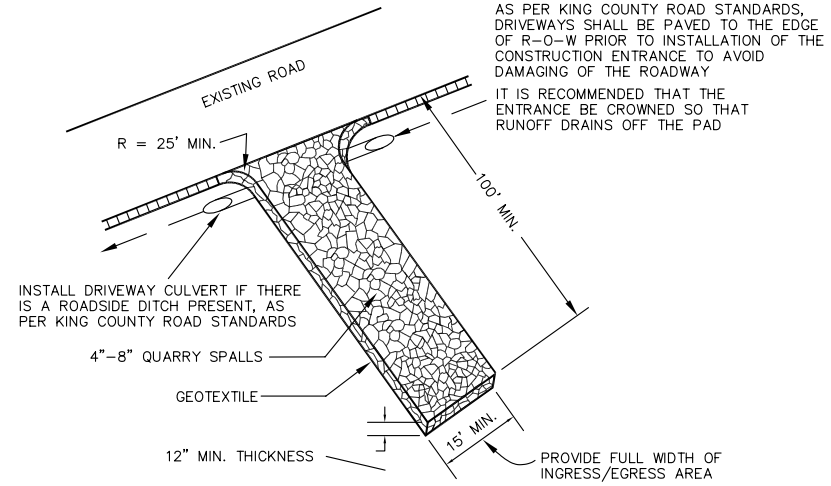

STABILIZED CONSTRUCTION ENTRANCE MAINTENANCE STANDARDS

1. QUARRY SPALLS (OR HOG FUEL) SHALL BE ADDED IF THE PAD IS NO LONGER IN ACCORDANCE WITH THE SPECIFICATIONS.

2. IF THE ENTRANCE IS NOT PREVENTING SEDIMENT FROM BEING TRACKED ONTO PAVEMENT, THEN ALTERNATIVE MEASURES TO KEEP THE STREETS FREE OF SEDIMENT SHALL BE USED. THIS MAY INCLUDE STREET SWEEPING, AN INCREASE IN THE DIMENSIONS OF THE ENTRANCE, OR THE INSTALLATION OF A WHEEL WASH. IF WASHING IS USED, IT SHALL BE DONE ON AN AREA COVERED WITH CRUSHED ROCK, ASPHALT OR CONCRETE AND WASH WATER SHALL DRAIN TO A SEDIMENT TRAP OR POND. WHEEL WASH WASTEWATER SHOULD NOT BE COMMINGLED WITH STORM WATER OR DISCHARGED TO THE STORM WATER TREATMENT SYSTEM.

3. ANY SEDIMENT THAT IS TRACKED ONTO PAVEMENT SHALL BE REMOVED IMMEDIATELY BY SWEEPING. THE SEDIMENT COLLECTED BY SWEEPING SHALL BE REMOVED OR STABILIZED ON SITE. THE PAVEMENT SHALL NOT BE CLEANED BY WASHING DOWN THE STREET, EXCEPT WHEN SWEEPING IS INEFFECTIVE AND THERE IS A THREAT TO PUBLIC SAFETY. IF IT IS NECESSARY TO WASH THE STREETS, THE CONSTRUCTION OF A SMALL SUMP SHALL BE CONSIDERED. THE SEDIMENT WOULD THEN BE WASHED INTO THE SUMP WHERE IT CAN BE CONTROLLED.

4. ANY QUARRY SPALLS THAT ARE LOOSENED FROM THE PAD AND END UP ON THE ROADWAY SHALL BE REMOVED IMMEDIATELY.

5. IF VEHICLES ARE ENTERING OR EXITING THE SITE AT POINTS OTHER THAN THE CONSTRUCTION ENTRANCE(S), FENCING SHALL BE INSTALLED TO CONTROL TRAFFIC.

STABILIZED CONSTRUCTION ENTRANCE DETAIL

7 / C35

NOT TO SCALE

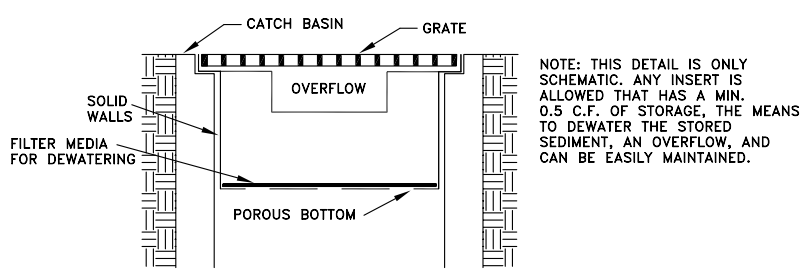

CATCH BASIN INSERT DETAIL

6 / C34

NOT TO SCALE

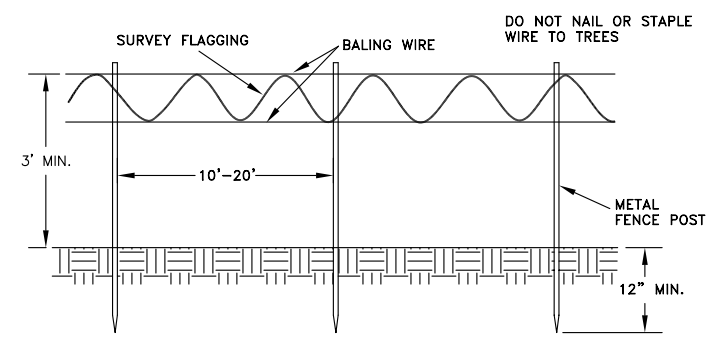

CLEARING LIMIT FENCING DETAIL

8 / –

NOT TO SCALE

DAVID J. CISAKOWSKI — STATE OF WASHINGTON — 30193 — REGISTERED PROFESSIONAL ENGINEER — EXPIRES: 6/9/06

GERALD A. BIRKEL — STATE OF WASHINGTON — 24332 — REGISTERED PROFESSIONAL ENGINEER — EXPIRES: 11-03-07

90% Design Review Submittal - Not for Construction

MONTGOMERY WATER GROUP, INC.

NO.	REVISION	BY	DATE
–	–	–	–

DESIGNED: DJC | CHECKED: GAB | KENT PROJECT NO. –
DRAWN: DJC | PROJ MANGR: GAB | CONST. MGMT. REVIEW –
APPROVED: _____ CITY ENGINEER | DATE 02/13/06

SCALE: HORIZ: AS NOTED | VERT: AS NOTED

BAR IS ONE INCH ON ORIGINAL DRAWING ADJUST SCALES ACCORDINGLY 0" 1"

KENT WASHINGTON — City of Kent Public Works Department Engineering Division

TESC DETAILS

COW CREEK REALIGNMENT, LAKE MERIDIAN OUTLET, AND WETLAND RESTORATION IMPROVEMENTS

SHEET C37 OF 37

FILE NO. –

TESC PLANS.DWG D CISAKOWSKI 02/13/06

PLANT INSTALLATION SPECIFICATIONS

REFER TO THE SPECIAL PROVISIONS AND THE STANDARD SPECIFICATIONS FOR ALL PLANT MATERIALS, AND COMPLETE INSTALLATION AND MAINTENANCE REQUIREMENTS.

GENERAL NOTES:

QUALITY ASSURANCE
1. PLANTS SHALL MEET OR EXCEED THE SPECIFICATIONS OF FEDERAL, STATE, AND LOCAL LAWS REQUIRING INSPECTION FOR PLANT DISEASE AND INSECT CONTROL.
2. PLANTS SHALL BE HEALTHY, VIGOROUS, AND WELL-FORMED, WITH WELL DEVELOPED, FIBROUS ROOT SYSTEMS, FREE FROM DEAD BRANCHES OR ROOTS. PLANTS SHALL BE FREE FROM DAMAGE CAUSED BY TEMPERATURE EXTREMES, LACK OR EXCESS OF MOISTURE, INSECTS, DISEASE, AND MECHANICAL INJURY. PLANTS IN LEAF SHALL BE WELL FOLIATED AND OF GOOD COLOR. PLANTS SHALL BE HABITUATED TO THE OUTDOOR ENVIRONMENTAL CONDITIONS INTO WHICH THEY WILL BE PLANTED (HARDENED-OFF).
3. TREES WITH DAMAGED, CROOKED, MULTIPLE OR BROKEN LEADERS WILL BE REJECTED. WOODY PLANTS WITH ABRASIONS OF THE BARK OR SUNSCALD WILL BE REJECTED.
4. NOMENCLATURE: PLANT NAMES SHALL CONFORM TO FLORA OF THE PACIFIC NORTHWEST BY HITCHCOCK AND CRONQUIST, UNIVERSITY OF WASHINGTON PRESS, 1973 AND/OR TO A FIELD GUIDE TO THE COMMON WETLAND PLANTS OF WESTERN WASHINGTON & NORTHWESTERN OREGON, ED. SARAH SPEAR COOKE, SEATTLE AUDUBON SOCIETY, 1997.

DEFINITIONS
1. PLANTS/PLANT MATERIALS. PLANTS AND PLANT MATERIALS SHALL INCLUDE ANY LIVE PLANT MATERIAL USED ON THE PROJECT. THIS INCLUDES BUT IS NOT LIMITED TO CONTAINER GROWN, B&B OR BAREROOT PLANTS; LIVE STAKES AND FASCINES (WATTLES); TUBERS, CORMS, BULBS, ETC.; SPRIGS, PLUGS, AND LINERS.
2. CONTAINER GROWN. CONTAINER GROWN PLANTS ARE THOSE WHOSE ROOTBALLS ARE ENCLOSED IN A POT OR BAG IN WHICH THAT PLANT GREW.
3. LIVE STAKES. LIVE STAKES ARE CUT FROM DORMANT, HEALTHY, LIVING INDIVIDUALS OF THE SPECIFIED PLANT SPECIES AT THE SPECIFIED SIZE AND ARE TO BE PLANTED BEFORE ROOTS FORM. LIVE STAKES SHALL HAVE A STRAIGHT TOP CUT IMMEDIATELY ABOVE BUT NOT INTO A NODE. THE LOWER, ROOTING END OF THE LIVE STAKE SHALL BE CUT AT A 45-DEGREE ANGLE. LIVE STAKES ARE CUT FROM ONE TO TWO YEAR OLD WOOD AND HAVE NO BRANCHES.

SUBSTITUTIONS
1. IT IS THE CONTRACTOR'S RESPONSIBILITY TO OBTAIN SPECIFIED MATERIALS IN ADVANCE IF SPECIAL GROWING, MARKETING OR OTHER ARRANGEMENTS MUST BE MADE IN ORDER TO SUPPLY SPECIFIED MATERIALS.
2. SUBSTITUTION OF PLANT MATERIALS NOT ON THE PROJECT LIST WILL NOT BE PERMITTED UNLESS AUTHORIZED IN WRITING BY THE STREAM RESTORATION CONSULTANT.
3. IF PROOF IS SUBMITTED THAT ANY PLANT MATERIAL SPECIFIED IS NOT OBTAINABLE, A PROPOSAL WILL BE CONSIDERED FOR USE OF THE NEAREST EQUIVALENT SIZE OR ALTERNATIVE SPECIES, WITH CORRESPONDING ADJUSTMENT OF CONTRACT PRICE.
4. SUCH PROOF WILL BE SUBSTANTIATED AND SUBMITTED IN WRITING TO THE CONSULTANT AT LEAST 30 DAYS PRIOR TO START OF WORK UNDER THIS SECTION.

INSPECTION
1. PLANTS SHALL BE SUBJECT TO INSPECTION AND APPROVAL BY THE STREAM RESTORATION CONSULTANT FOR CONFORMANCE TO SPECIFICATIONS, EITHER AT TIME OF DELIVERY ON-SITE OR AT THE GROWER'S NURSERY. APPROVAL OF PLANT MATERIALS AT ANY TIME SHALL NOT IMPAIR THE SUBSEQUENT RIGHT OF INSPECTION AND REJECTION DURING PROGRESS OF THE WORK.
2. PLANTS INSPECTED ON SITE AND REJECTED FOR NOT MEETING SPECIFICATIONS MUST BE REMOVED IMMEDIATELY FROM SITE OR RED-TAGGED AND REMOVED AS SOON AS POSSIBLE.
3. THE STREAM RESTORATION CCONSULTANT MAY ELECT TO INSPECT PLANT MATERIALS AT THE PLACE OF GROWTH. AFTER INSPECTION AND ACCEPTANCE, THE STREAM RESTORATION CCONSULTANT MAY REQUIRE THE INSPECTED PLANTS BE LABELED AND RESERVED FOR PROJECT. SUBSTITUTION OF THESE PLANTS WITH OTHER INDIVIDUALS, EVEN OF THE SAME SPECIES AND SIZE, IS UNACCEPTABLE.

MEASUREMENTS OF PLANTS
1. PLANTS SHALL CONFORM TO SIZES SPECIFIED UNLESS SUBSTITUTIONS ARE MADE AS OUTLINED IN THIS CONTRACT.
2. HEIGHT AND SPREAD DIMENSIONS SPECIFIED REFER TO MAIN BODY OF PLANT AND NOT BRANCH OR ROOT TIP TO TIP. PLANT DIMENSIONS SHALL BE MEASURED WHEN THEIR BRANCHES OR ROOTS ARE IN THEIR NORMAL POSITION.
3. WHERE A RANGE OF SIZE IS GIVEN, NO PLANT SHALL BE LESS THAN THE MINIMUM SIZE AND AT LEAST 50% OF THE PLANTS SHALL BE AS LARGE AS THE MEDIAN OF THE SIZE RANGE. (EXAMPLE: IF THE SIZE RANGE IS 12" TO 18", AT LEAST 50% OF PLANTS MUST BE 15" TALL.)

SUBMITTALS

PROPOSED PLANT SOURCES
1. WITHIN 45 DAYS AFTER AWARD OF THE CONTRACT, SUBMIT A COMPLETE LIST OF PLANT MATERIALS PROPOSED TO BE PROVIDED DEMONSTRATING CONFORMANCE WITH THE REQUIREMENTS SPECIFIED. INCLUDE THE NAMES AND ADDRESSES OF ALL GROWERS AND NURSERIES.

PRODUCT CERTIFICATES
1. PLANT MATERIALS LIST - SUBMIT DOCUMENTATION TO CONSULTANT AT LEAST 30 DAYS PRIOR TO START OF WORK UNDER THIS SECTION THAT PLANT MATERIALS HAVE BEEN ORDERED. ARRANGE PROCEDURE FOR INSPECTION OF PLANT MATERIAL WITH CONSULTANT AT TIME OF SUBMISSION.
2. HAVE COPIES OF VENDOR'S OR GROWERS' INVOICES OR PACKING SLIPS FOR ALL PLANTS ON SITE DURING INSTALLATION. INVOICE OR PACKING SLIP SHOULD LIST SPECIES BY SCIENTIFIC NAME, QUANTITY, AND DATE DELIVERED (AND GENETIC ORIGIN IF THAT INFORMATION WAS PREVIOUSLY REQUESTED).

DELIVERY, HANDLING, & STORAGE

NOTIFICATION
1. CONTRACTOR MUST NOTIFY CONSULTANT 48 HOURS OR MORE IN ADVANCE OF DELIVERIES SO THAT CONSULTANT MAY ARRANGE FOR INSPECTION.

PLANT MATERIALS
1. TRANSPORTATION - DURING SHIPPING, PLANTS SHALL BE PACKED TO PROVIDE PROTECTION AGAINST CLIMATE EXTREMES, BREAKAGE AND DRYING. PROPER VENTILATION AND PREVENTION OF DAMAGE TO BARK, BRANCHES, AND ROOT SYSTEMS MUST BE ENSURED.
2. SCHEDULING AND STORAGE - PLANTS SHALL BE DELIVERED AS CLOSE TO PLANTING AS POSSIBLE. PLANTS IN STORAGE MUST BE PROTECTED AGAINST ANY CONDITION THAT IS DETRIMENTAL TO THEIR CONTINUED HEALTH AND VIGOR.
3. HANDLING - PLANT MATERIALS SHALL NOT BE HANDLED BY THE TRUNK, LIMBS, OR FOLIAGE BUT ONLY BY THE CONTAINER, BALL, BOX, OR OTHER PROTECTIVE STRUCTURE, EXCEPT BAREROOT PLANTS SHALL BE KEPT IN BUNDLES UNTIL PLANTING AND THEN HANDLED CAREFULLY BY THE TRUNK OR STEM.
4. LABELS - PLANTS SHALL HAVE DURABLE, LEGIBLE LABELS STATING CORRECT SCIENTIFIC NAME AND SIZE. TEN PERCENT OF CONTAINER GROWN PLANTS IN INDIVIDUAL POTS SHALL BE LABELED. PLANTS SUPPLIED IN FLATS, RACKS, BOXES, BAGS, OR BUNDLES SHALL HAVE ONE LABEL PER GROUP.

WARRANTY

PLANT WARRANTY
1. PLANTS MUST BE GUARANTEED TO BE TRUE TO SCIENTIFIC NAME AND SPECIFIED SIZE, AND TO BE HEALTHY AND CAPABLE OF VIGOROUS GROWTH.

REPLACEMENT
1. PLANTS NOT FOUND MEETING ALL OF THE REQUIRED CONDITIONS MUST BE REMOVED FROM SITE AND REPLACED IMMEDIATELY AT THE CONSULTANT'S DISCRETION.
2. PLANTS NOT SURVIVING AFTER ONE YEAR TO BE REPLACED.

PLANT INSTALLATION SPECIFICATIONS (CONTINUED)

PLANT MATERIAL

GENERAL
1. PLANTS SHALL BE NURSERY GROWN IN ACCORDANCE WITH GOOD HORTICULTURAL PRACTICES UNDER CLIMATIC CONDITIONS SIMILAR TO OR MORE SEVERE THAN THOSE OF THE PROJECT SITE.
2. PLANTS SHALL BE TRUE TO SPECIES AND VARIETY OR SUBSPECIES. NO CULTIVARS OR NAMED VARIETIES SHALL BE USED UNLESS SPECIFIED AS SUCH.

QUANTITIES
1. SEE "LEGEND OF PLANT SYMBOLS".

ROOT TREATMENT
1. CONTAINER GROWN PLANTS (INCLUDES PLUGS): PLANT ROOT BALLS MUST HOLD TOGETHER WHEN THE PLANT IS REMOVED FROM THE POT, EXCEPT THAT A SMALL AMOUNT OF LOOSE SOIL MAY BE ON THE TOP OF THE ROOTBALL.
2. PLANTS MUST NOT BE ROOT-BOUND; THERE MUST BE NO CIRCLING ROOTS PRESENT IN ANY PLANT INSPECTED.
3. ROOTBALLS THAT HAVE CRACKED OR BROKEN WHEN REMOVED FROM THE CONTAINER SHALL BE REJECTED.
4. LIVE STAKES (INCLUDES FASCINES, WILLOW WATTLES). LIVE STAKES MUST BE INSTALLED BEFORE ROOTING OCCURS. PLANTS THAT ALREADY HAVE ROOTS AT THE TIME OF INSTALLATION WILL BE REJECTED.

PLANTING NOTES

1. HYDROSEED ALL PLANTED AND CONSTRUCTION DISTURBED AREAS WITH SEED MIX LISTED IN SPECIFICATION, DIVISION 9. DO NOT SEED IN WETLAND AND WETLAND BUFFER AREAS
2. CLEAR ALL HIMALAYAN BLACKBERRY, EVERGREEN BLACKBERRY, JAPANESE KNOTWEED, SCOTCH BROOM, ENGLISH IVY, MORNING GLORY, ENGLISH LAUREL, EUROPEAN HAWTHORN AND OTHER INVASIVE NON-NATIVE WEEDS ENCOUNTERED IN CONSTRUCTION AREAS. ANY WEED LISTED AS A KING COUNTY NOXIOUS WEED MUST BE REMOVED FROM WITHIN THE PROJECT LIMITS. GRUB OUT ROOTS AND DISPOSE OFF-SITE
3. WEEDING/PLANTING AREAS OUTLINED ON THESE PLANS ARE APPROXIMATE. AREAS MAY NEED TO BE ADJUSTED SLIGHTLY BY THE PROJECT BIOLOGIST OR LANDSCAPE ARCHITECT IN THE FIELD DURING CONSTRUCTION
4. INSTALL PLANTS GENERALLY AS SHOWN ON PLAN; FIELD ADJUST FOR LOCAL MICROSITE CONDITIONS. NOTE: STREAM BANKS MAY BE COVERED IN GRAVEL/COBBLE AT TIME OF PLANTING. PLANTS MAY BE PLANTED IN GRAVEL/COBBLE IF THE FOLLOWING CONDITIONS ARE MET:
   a. SURROUNDING GRAVEL IS 6" DEPTH OR LESS
   b. GRAVEL IS COMPLETELY REMOVED FROM PLANTING PIT AND BACKFILLED WITH NATIVE ON-SITE TOPSOIL
   c. COIR MATTING OR OTHER EROSION CONTROL FABRIC IS CUT AND REMOVED FROM PLANTING PIT TO ALLOW ROOT GROWTH
5. ADJUST LOCATIONS AS NEEDED TO AVOID PLANTING TREES OVER OR WITHIN 5'-0" OF EXISTING OR PROPOSED BURIED UTILITIES. CONTRACTOR TO STAKE ALL EXISTING AND PROPOSED UTILITIES
6. DO NOT INSTALL TREES WITHIN 3'-0" OF RETAINING WALLS.

STATE OF WASHINGTON REGISTERED LANDSCAPE ARCHITECT

MARK S. GARFF
CERTIFICATE NO. 888

LEGEND OF PLANT SYMBOLS

TREES

	BOTANICAL NAME / COMMON NAME	QTY.	SIZE / SPACING
AM	ACER MACROPHYLLUM / BIG-LEAF MAPLE	XX	2 GAL. / AS SHOWN
AR	ALNUS RUBRA / RED ALDER		1 GAL. / AS SHOWN
F	FRAXINUS LATIFOLIA / OREGON ASH		2 GAL. / AS SHOWN
PS	PICEA SITCHENSIS / SITKA SPRUCE		40% 5 GAL. & 60% 2 GAL. / AS SHOWN
PT	POPULUS TRICHOCARPA / BLACK COTTONWOOD		1 GAL. / AS SHOWN
PM	PSEUDOTSUGA MENZIESII / DOUGLAS FIR		40% 5 GAL. & 60% 2 GAL. / AS SHOWN
T	THUJA PLICATA / WESTERN RED CEDAR		40% 5 GAL. % 60% 2 GAL. / AS SHOWN

SHRUBS

v	ACER CIRCINATUM / VINE MAPLE	XX	2 GAL. / AS SHOWN
ag	AMELANCHIER ALNIFOLIA / SERVICEBERRY		1 GAL. / AS SHOWN
cs	CORNUS STOLONIFERA / RED OSIER DOGWOOD		2 GAL. / AS SHOWN
cc	CORYLUS CORNUTA / BEAKED HAZELNUT		2 GAL. / AS SHOWN
cd	CRATAEGUS DOUGLASII / BLACK HAWTHORN		2 GAL. / AS SHOWN
h	HOLODISCUS DISCOLOR / OCEAN SPRAY		1 GAL. / AS SHOWN
l	LONICERA INVOLUCRATA / BLACK TWINBERRY		1 GAL. / AS SHOWN
m	MAHONIA NERVOSA / LOW OREGON GRAPE		1 GAL. / AS SHOWN
o	OEMLERIA CERASIFORMIS / INDIAN PLUM		1 GAL. / AS SHOWN
pc	PHYSOCARPUS CAPITATUS / PACIFIC NINEBARK		1 GAL. / AS SHOWN
rh	RHAMNUS PURSHIANA / CASCARA		1 GAL. / AS SHOWN
rp	ROSA PISOCARPA / PEAFRUIT ROSE		1 GAL. / AS SHOWN
rn	ROSA NUTKANA / NOOTKA ROSE		1 GAL. / AS SHOWN
rb	RIBES BRACTEOSUM / STINK CURRANT		1 GAL. / AS SHOWN
rl	RUBUS PARVIFLORUS / THIMBLEBERRY		1 GAL. / AS SHOWN
ru	RUBUS SPECTABILIS / SALMONBERRY		1 GAL. / AS SHOWN
sl	SALIX LASIANDRA / PACIFIC WILLOW		½"-1½" DIA. x 3' LONG CUTTINGS / 4' O.C.
ss	SALIX SITCHENSIS / SITKA WILLOW		½"-1½" DIA. x 3' LONG CUTTINGS / 4' O.C.
sr	SAMBUCUS RACEMOSA / RED ELDERBERRY		1 GAL. / AS SHOWN
sd	SPIRAEA DOUGLASII / HARDHACK		¼"-1" DIA. x 3' LONG CUTTINGS / 4' O.C.
sg	SYMPHORICARPOS ALBUS / SNOWBERRY		1 GAL. / AS SHOWN

PERENNIALS / EMERGENTS / GROUNDCOVER

CAREX KELLOGGII / KELLOGG'S SEDGE	XX	15% 10 CU. IN. PLUGS / 12" O.C.
ELEOCHARIS PALUSTRIS / COMMON SPIKE RUSH		20% 10 CU. IN. PLUGS / 12" O.C.
JUNCUS ENSIFOLIUS / DAGGER LEAF RUSH		25% 10 CU. IN. PLUGS / 12" O.C.
SCIRPUS MICROCARPUS / SMALL-FRUITED BULRUSH		25% 10 CU. IN. PLUGS / 12" O.C.
SPARGANIUM EMERSUM / BUR-REED		15% 10 CU. IN. PLUGS / 12" O.C.
SCIRPUS MICROCARPUS / SMALL-FRUITED BULRUSH		70% 10 CU. IN. PLUGS / 24" O.C.
ELEOCHARIS PALUSTRIS / COMMON SPIKE RUSH		20% 10 CU. IN. PLUGS / 24" O.C.
CAREX STIPATA / SAWBEAK SEDGE		5% 10 CU. IN. PLUGS / 24" O.C.
CAREX OBNUTA / SLOUGH SEDGE		5% 10 CU. IN. PLUGS / 24" O.C.
CAREX OBNUTA / SLOUGH SEDGE		10 CU. IN. PLUGS / 24" O.C.
ARCTOSTAPHYLOS UVA-URSI / KINNIKINNICK		4" POTS / 24" O.C.
ATHERIUM FELIX-FEMINA / LADY FERN		1 GAL. / AS SHOWN
GAULTHERIA SHALLON / SALAL		4" POTS / AS SHOWN
LUPINUS POLYPHYLLUS / LARGE-LEAVED LUPINE		4" POTS / AS SHOWN
LYSICHITON AMERICANUM / SKUNK CABBAGE		1 GAL. / AS SHOWN
POLYSTICHUM MUNITUM / SWORD FERN		4" POTS / AS SHOWN
POTAMOGETON NATANS / FLOATING-LEAVED PONDWEED		10 CU. IN. PLUGS / AS SHOWN
SCIRPUS ACUTUS / HARDSTEM BULRUSH		10 CU. IN. PLUGS / AS SHOWN
SCIRPUS MIRCOCARPUS / SMALL-FRUITED BULRUSH		10" CU. IN. PLUGS / AS SHOWN
STACHYS COOLEYAE / COOLEY'S HEDGE-NETTLE		1 GAL. / AS SHOWN

springwood

The Watershed Company

MONTGOMERY WATER GROUP, INC.

90% Design Review Submittal - Not for Construction

NO.	REVISION	BY	DATE
-	-	-	-

DESIGNED: DJC | CHECKED: GAB | KENT PROJECT NO. -
DRAWN: DJC | PROJ MANGR: GAB | CONST. MGMT. REVIEW -
APPROVED: _____ CITY ENGINEER
SCALE: HORIZ: AS NOTED VERT: AS NOTED
DATE 02/13/06
BAR IS ONE INCH ON ORIGINAL DRAWING ADJUST SCALES ACCORDINGLY 0" 1"

KENT WASHINGTON
City of Kent
Public Works Department
Engineering Division

LANDSCAPE NOTES

COW CREEK REALIGNMENT, LAKE MERIDIAN OUTLET, AND WETLAND RESTORATION IMPROVEMENTS

SHEET L01 OF L06
FILE NO. -

LANDSCAPE NOTES.DWG D:\GSAKOWSKI 02/13/06

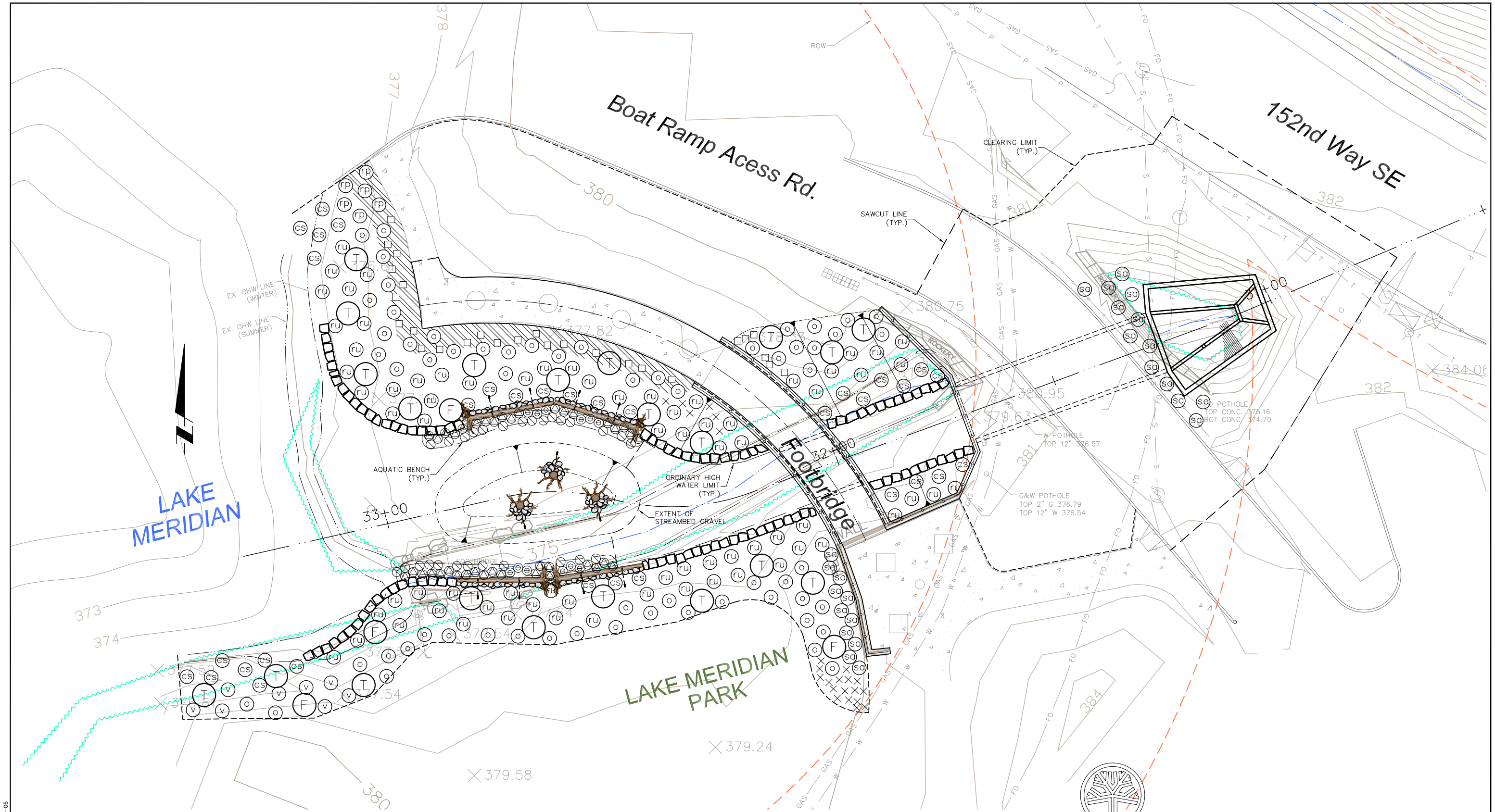

NOTES:

1. SEE SHEET L01 FOR PLANT LEGEND, PLANTING NOTES, AND PLANT INSTALLATION SPECIFICATIONS.
2. SEE SHEET L06 FOR PLANTING DETAILS.

LAKE OUTLET ZONE PLANTING PLAN

0 10' 20'
SCALE: 1"=10'

STATE OF WASHINGTON REGISTERED LANDSCAPE ARCHITECT

MARK S. GARFF
CERTIFICATE NO. 888

The Watershed Company

MONTGOMERY WATER GROUP, INC

90% Design Review Submittal - Not for Construction

NO.	REVISION	BY	DATE
–	–	–	–

DESIGNED: DJC | CHECKED: GAB | KENT PROJECT NO. –
DRAWN: DJC | PROJ MANGR: GAB | CONST. MGMT. REVIEW –
APPROVED: _____ CITY ENGINEER

SCALE: HORIZ: AS NOTED VERT: AS NOTED
DATE 02/13/06

BAR IS ONE INCH ON ORIGINAL DRAWING ADJUST SCALES ACCORDINGLY
0" 1"

KENT WASHINGTON
City of Kent
Public Works Department
Engineering Division

LANDSCAPE PLANS – LAKE OUTLET ZONE

COW CREEK REALIGNMENT, LAKE MERIDIAN OUTLET, AND WETLAND RESTORATION IMPROVEMENTS

SHEET L02 OF L06
FILE NO. –

LANDSCAPE PLANS.DWG D CISAKOWSKI 02-13-06

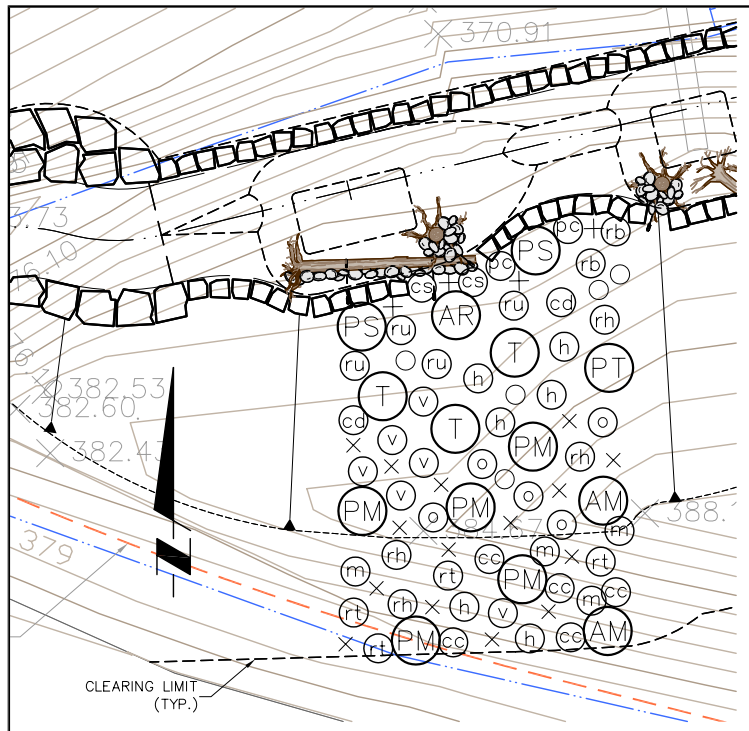

MODIFIED EXISTING CHANNEL ZONE TYPICAL PLANTING PLAN

0 10' 20'
SCALE: 1"=10'

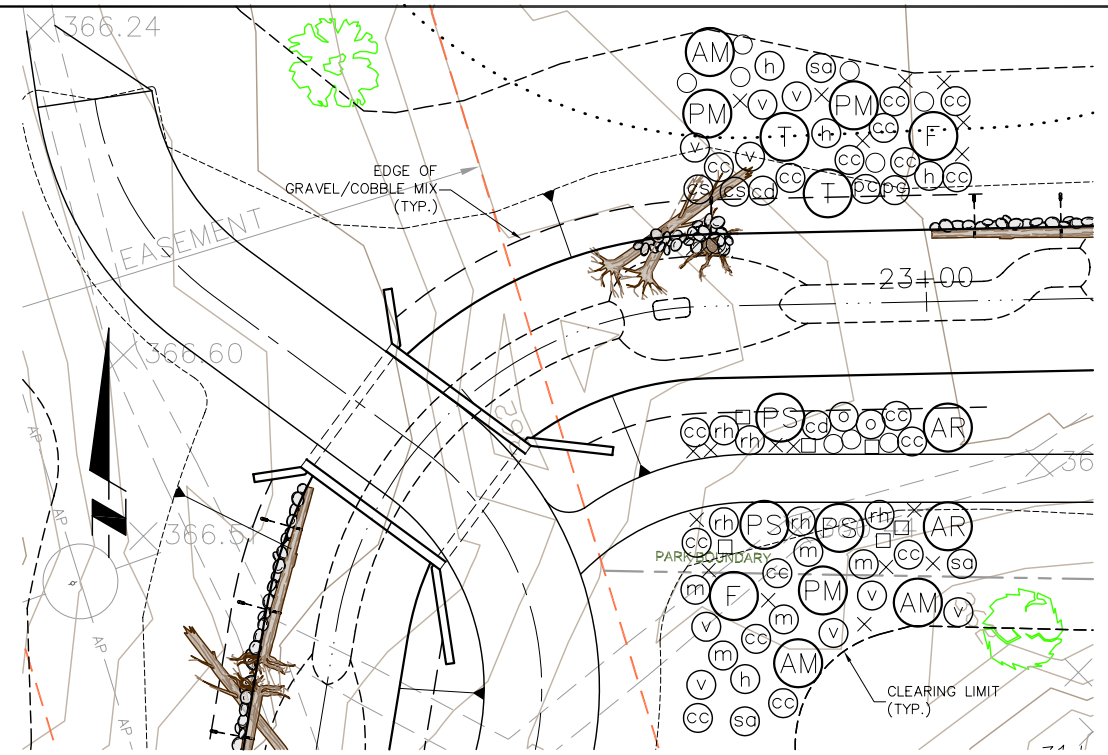

TRANSITION ZONE 2 TYPICAL PLANTING PLAN

0 10' 20'
SCALE: 1"=10'

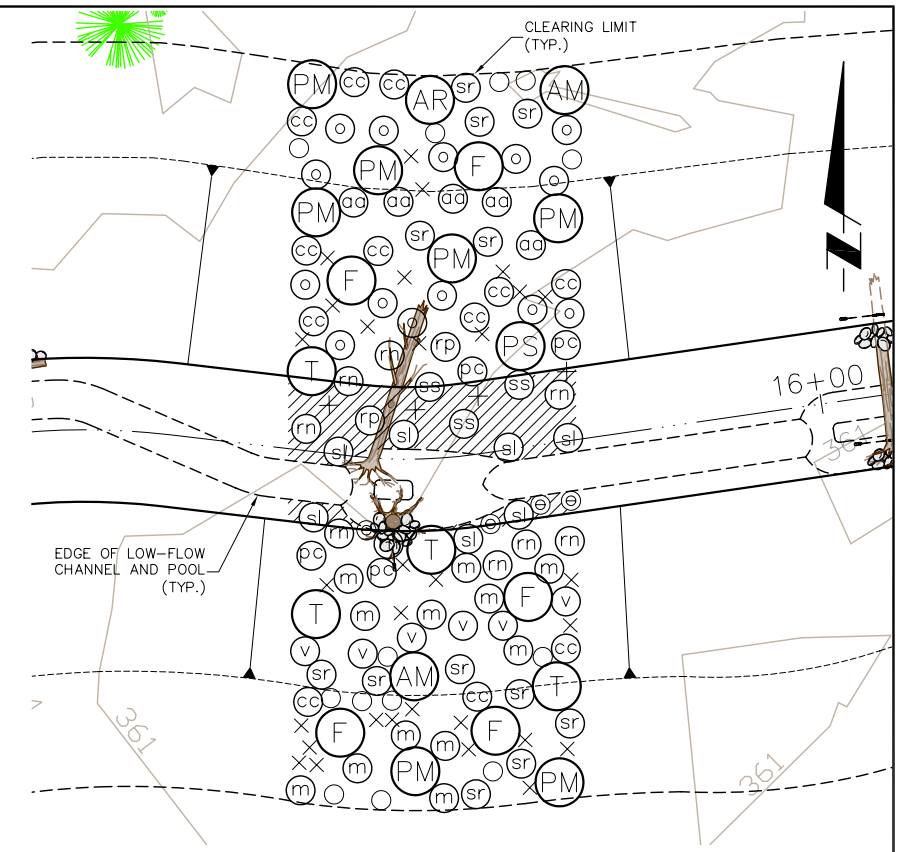

UPPER BENCH ZONE TYPICAL PLANTING PLAN

0 10' 20'
SCALE: 1"=10'

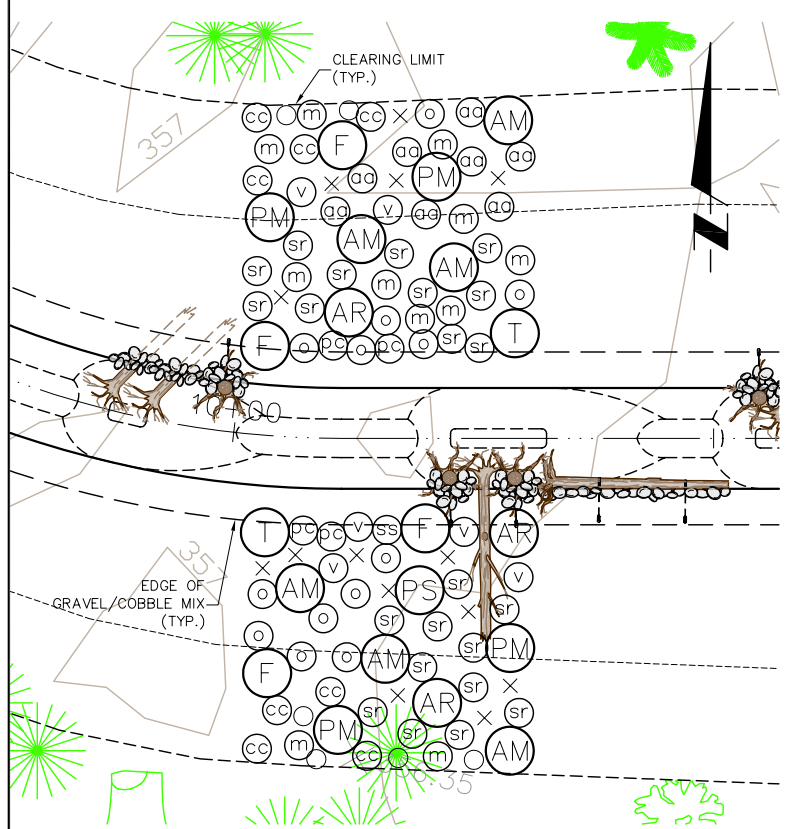

TRANSITION ZONE 1 TYPICAL PLANTING PLAN

0 10' 20'
SCALE: 1"=10'

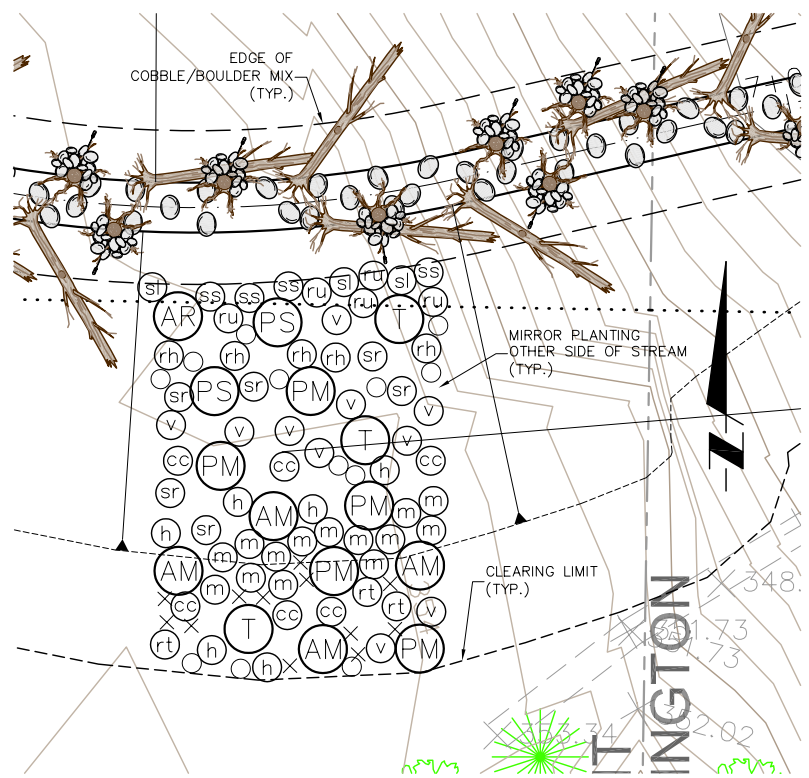

STEEP SLOPE ZONE TYPICAL PLANTING PLAN

0 10' 20'
SCALE: 1"=10'

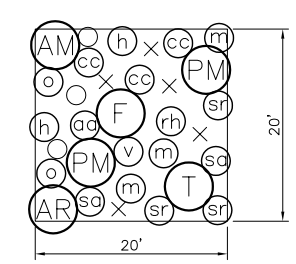

NON-STREAM CONSTRUCTION-DISTURBED AREAS TYPICAL PLANTING PLAN

0 10' 20'
SCALE: 1"=10'

NOTES:

1. SEE SHEET L01 FOR PLANT LEGEND, PLANTING NOTES, AND PLANT INSTALLATION SPECIFICATIONS.
2. SEE SHEET L06 FOR PLANTING DETAILS.

STATE OF WASHINGTON REGISTERED LANDSCAPE ARCHITECT

MARK S. GARFF
CERTIFICATE NO. 888

The Watershed Company

MONTGOMERY WATER GROUP, INC.

90% Design Review Submittal - Not for Construction

NO.	REVISION	BY	DATE
–	–	–	–

DESIGNED: DJC | CHECKED: GAB | KENT PROJECT NO. –
DRAWN: DJC | PROJ MANGR: GAB | CONST. MGMT. REVIEW –
APPROVED: _____ CITY ENGINEER

SCALE: HORIZ: AS NOTED VERT: AS NOTED
DATE Nov. 8, 2003

BAR IS ONE INCH ON ORIGINAL DRAWING ADJUST SCALES ACCORDINGLY
0" 1"

KENT WASHINGTON
City of Kent
Public Works Department
Engineering Division

LANDSCAPE PLANS – CHANNEL ZONES

COW CREEK REALIGNMENT, LAKE MERIDIAN OUTLET, AND WETLAND RESTORATION IMPROVEMENTS

SHEET L03 OF L06
FILE NO. –

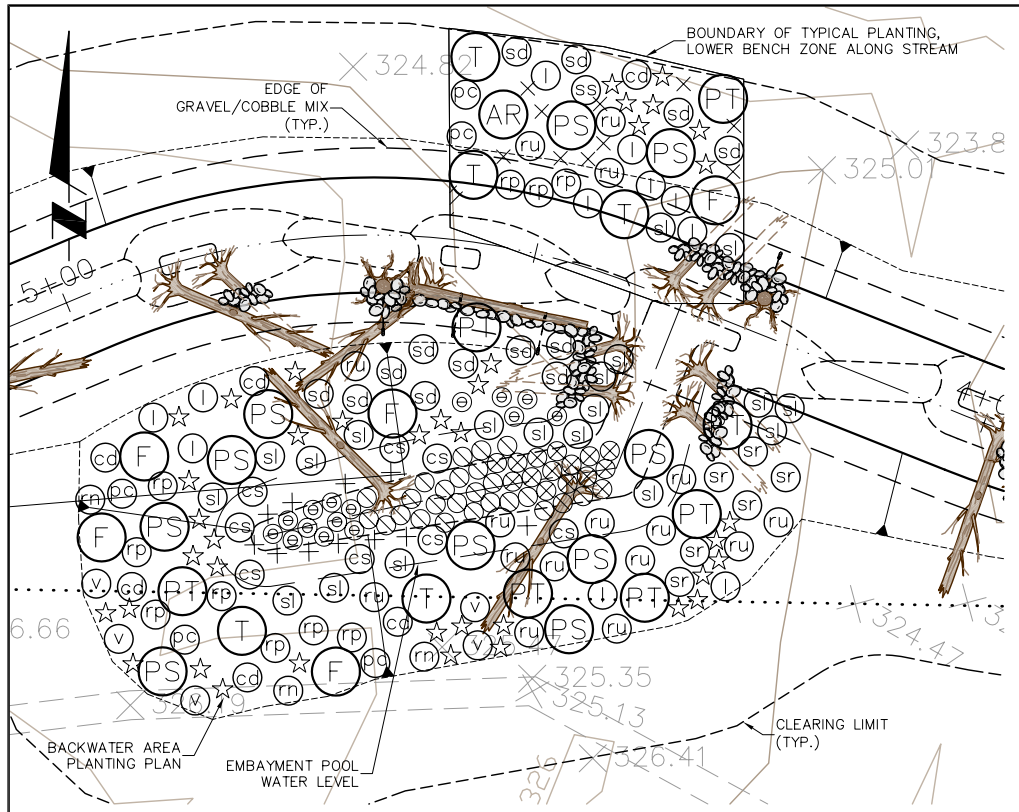

LOWER BENCH ZONE - EMBAYMENT AREA 2 TYPICAL PLANTING PLAN

0 10' 20'
SCALE: 1"=10'

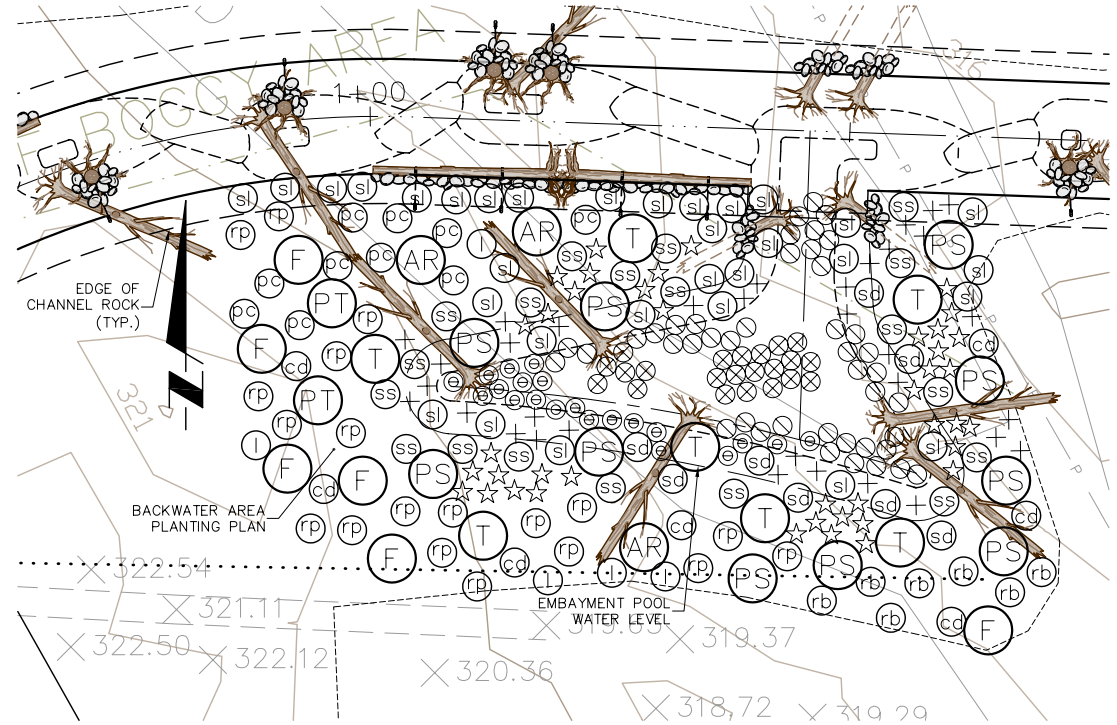

LOWER BENCH ZONE - EMBAYMENT AREA 1 TYPICAL PLANTING PLAN

0 10' 20'
SCALE: 1"=10'

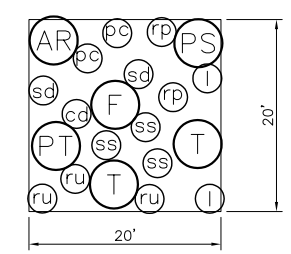

NON-STREAM CONSTRUCTION-DISTURBED AREAS (EAST OF Sta 3+28 - WETLAND B) TYPICAL PLANTING PLAN

0 10' 20'
SCALE: 1"=10'

STATE OF WASHINGTON REGISTERED LANDSCAPE ARCHITECT

MARK S. GARFF
CERTIFICATE NO. 888

NOTES:

1. SEE SHEET L01 FOR PLANT LEGEND, PLANTING NOTES, AND PLANT INSTALLATION SPECIFICATIONS.
2. SEE SHEET L06 FOR PLANTING DETAILS.

90% Design Review Submittal - Not for Construction

The Watershed Company

MONTGOMERY WATER GROUP, INC

NO.	REVISION	BY	DATE
–	–	–	–

DESIGNED: DJC | CHECKED: GAB | KENT PROJECT NO. –
DRAWN: DJC | PROJ MANGR: GAB | CONST. MGMT. REVIEW –
APPROVED: _____ CITY ENGINEER | DATE 02/13/06

SCALE: HORIZ: AS NOTED VERT: AS NOTED

BAR IS ONE INCH ON ORIGINAL DRAWING ADJUST SCALES ACCORDINGLY
0" 1"

KENT WASHINGTON
City of Kent
Public Works Department
Engineering Division

LANDSCAPE PLANS – CHANNEL ZONES

COW CREEK REALIGNMENT, LAKE MERIDIAN OUTLET, AND WETLAND RESTORATION IMPROVEMENTS

SHEET L04 OF L06

FILE NO. –

LANDSCAPE PLANS.DWG D. CISAKOWSKI 02-13-06

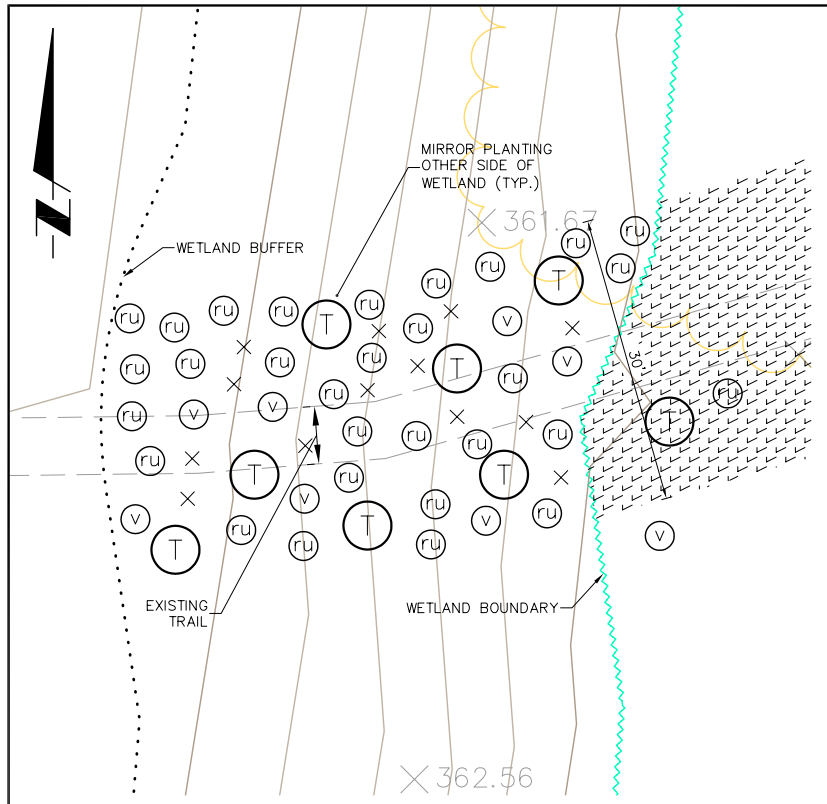

WETLAND A
TYPICAL PLANTING PLAN

0 10' 20'
SCALE: 1"=10'

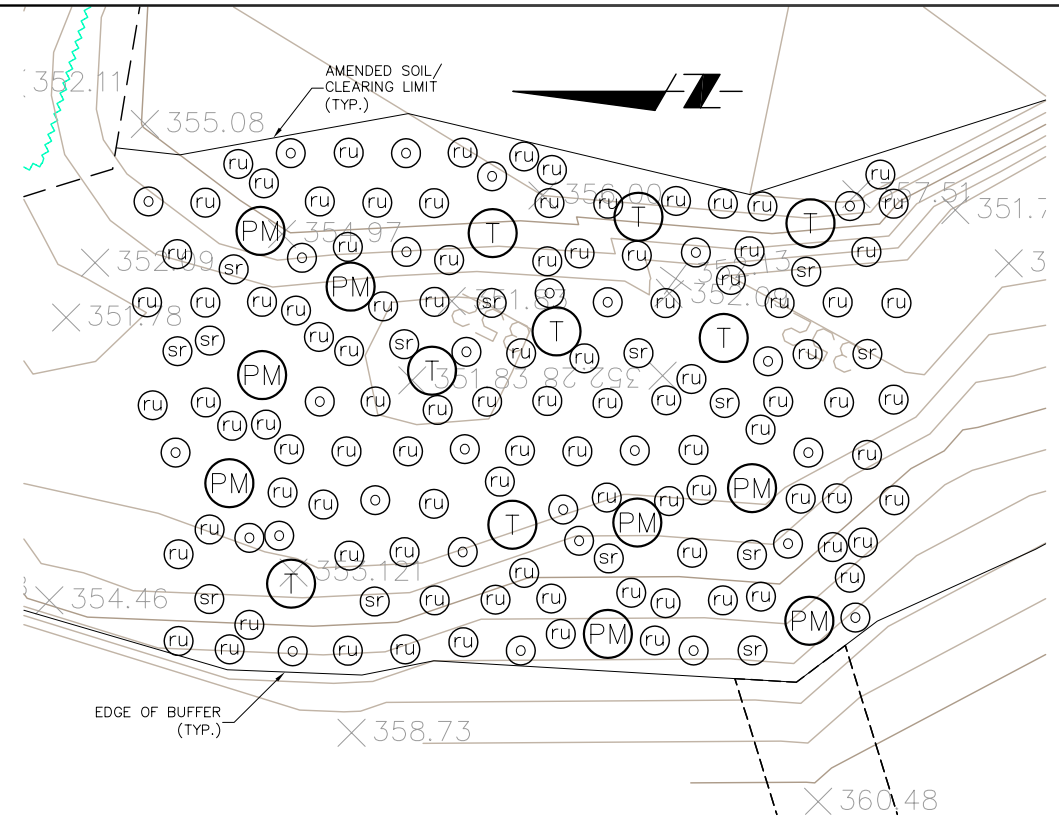

WETLAND C, D, E, AND F BUFFER
TYPICAL PLANTING PLAN

0 10' 20'
SCALE: 1"=10'

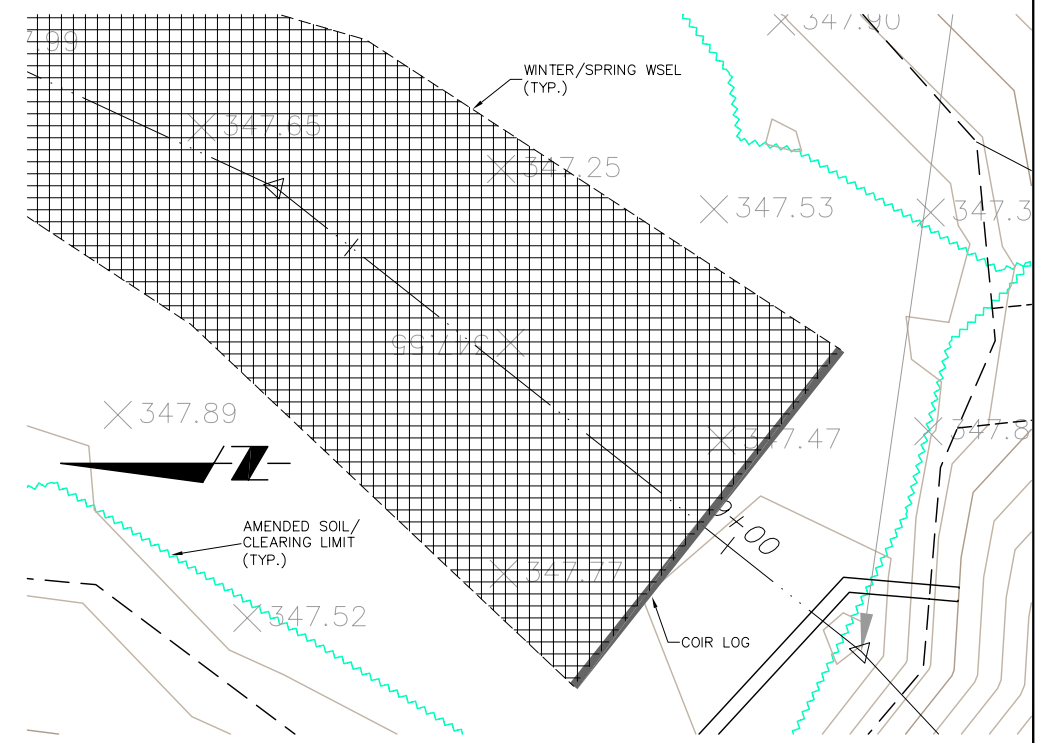

WETLAND C, D, E, AND F EMERGENT AREA
TYPICAL PLANTING PLAN

0 10' 20'
SCALE: 1"=10'

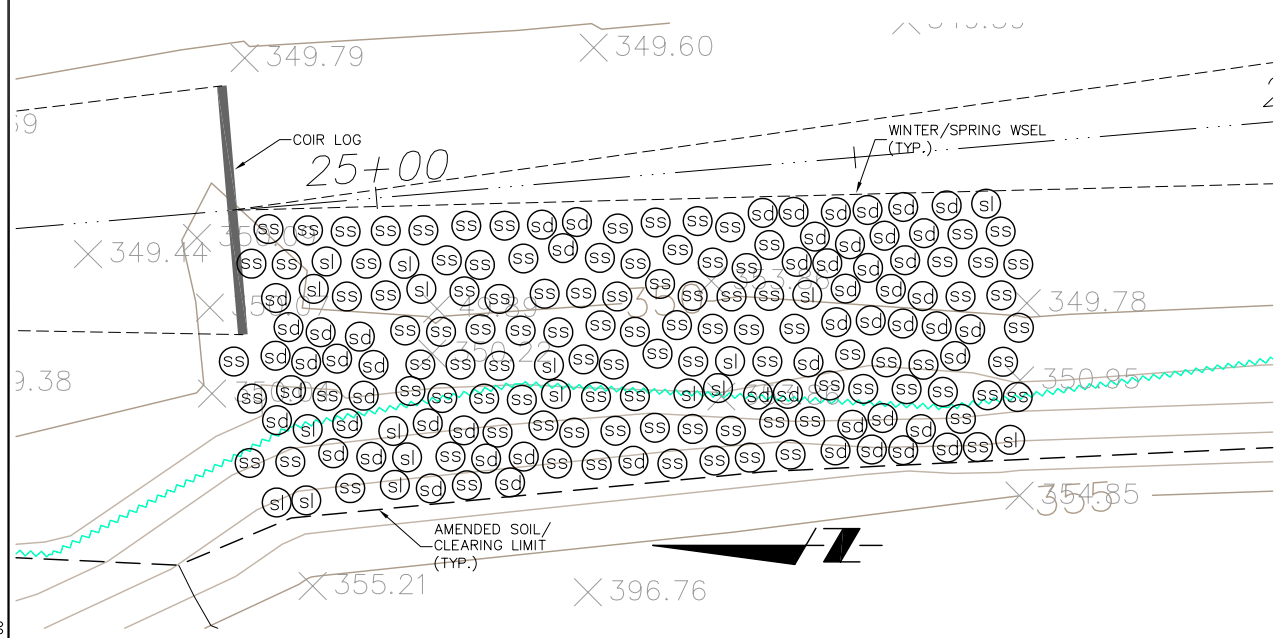

WETLAND C SHRUB AREA
TYPICAL PLANTING PLAN

0 10' 20'
SCALE: 1"=10'

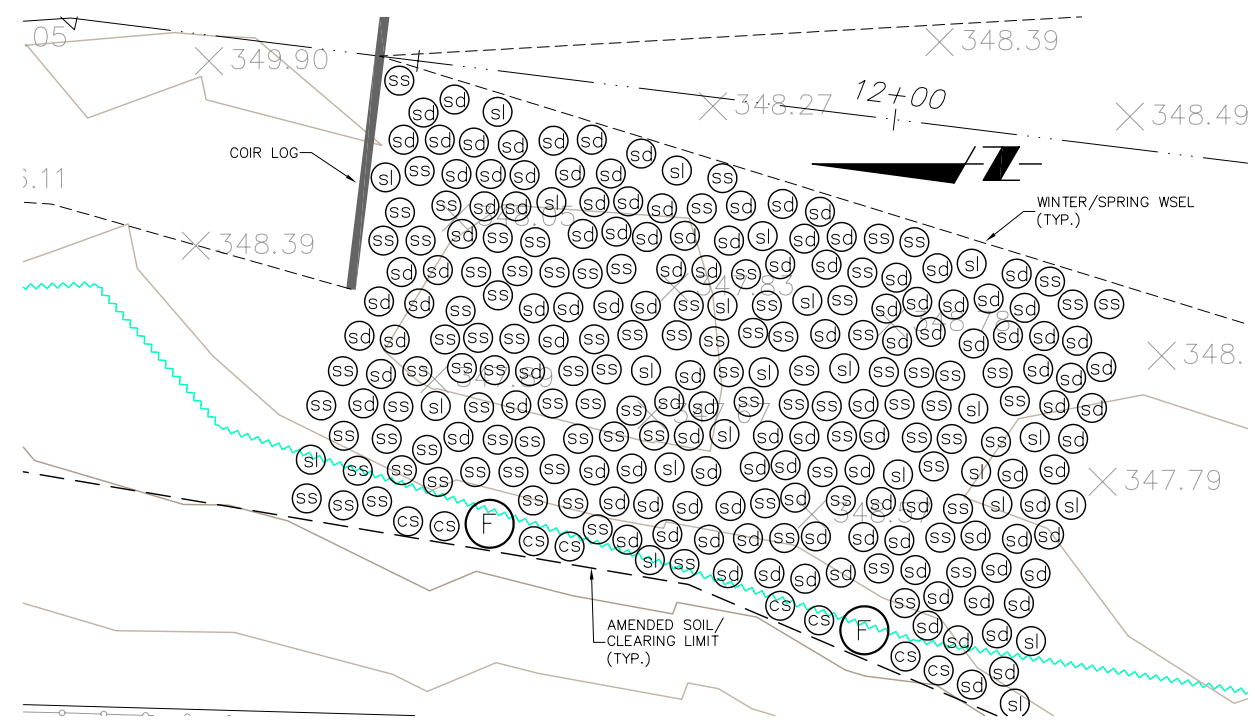

WETLAND D, E, ANF F SHRUB AREA
TYPICAL PLANTING PLAN

0 10' 20'
SCALE: 1"=10'

NOTES:

1. SEE SHEET L01 FOR PLANT LEGEND, PLANTING NOTES, AND PLANT INSTALLATION SPECIFICATIONS.
2. SEE SHEET L06 FOR PLANTING DETAILS.

90% Design Review Submittal - Not for Construction

springwood

MONTGOMERY WATER GROUP, INC

NO.	REVISION	BY	DATE
–	–	–	–

DESIGNED: DJC | CHECKED: GAB | KENT PROJECT NO. –
DRAWN: DJC | PROJ MANGR: GAB | CONST. MGMT. REVIEW –
APPROVED: _____ CITY ENGINEER
SCALE: HORIZ: AS NOTED VERT: AS NOTED
DATE 02/13/06
BAR IS ONE INCH ON ORIGINAL DRAWING ADJUST SCALES ACCORDINGLY 0" 1"

KENT WASHINGTON
City of Kent
Public Works Department
Engineering Division

LANDSCAPE PLANS – WETLANDS

COW CREEK REALIGNMENT, LAKE MERIDIAN OUTLET, AND WETLAND RESTORATION IMPROVEMENTS

SHEET L05 OF L06
FILE NO. –

LANDSCAPE PLANS.DWG D CISAKOWSKI 02-13-06

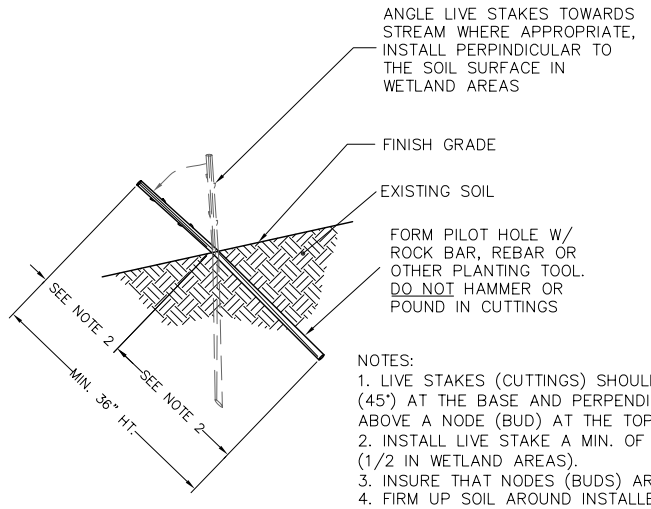

NOTES:
1. LIVE STAKES (CUTTINGS) SHOULD BE ANGLE CUT (45°) AT THE BASE AND PERPENDICULAR CUT JUST ABOVE A NODE (BUD) AT THE TOP.
2. INSTALL LIVE STAKE A MIN. OF 2/3RDS INTO SOIL (1/2 IN WETLAND AREAS).
3. INSURE THAT NODES (BUDS) ARE POINTING UP.
4. FIRM UP SOIL AROUND INSTALLED LIVE STAKE.
5. WATER LIVE STAKES AFTER PLANTING.

TYPICAL CUTTING PLANTING DETAIL

1 / –

NOT TO SCALE

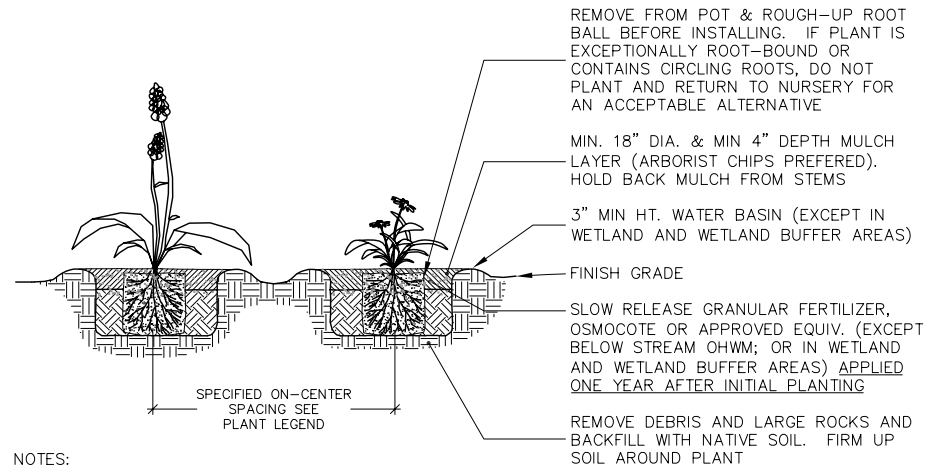

NOTES:
1. PLANTING PIT SHALL NOT BE LESS THAN (2) TIMES THE WIDTH OF THE ROOT BALL DIA.
2. LOOSEN SIDES AND BOTTOMS OF PLANTING PIT.
3. SOAK PLANTING PIT AFTER PLANTING.

TYPICAL GROUNDCOVER PLANTING DETAIL

2 / –

NOT TO SCALE

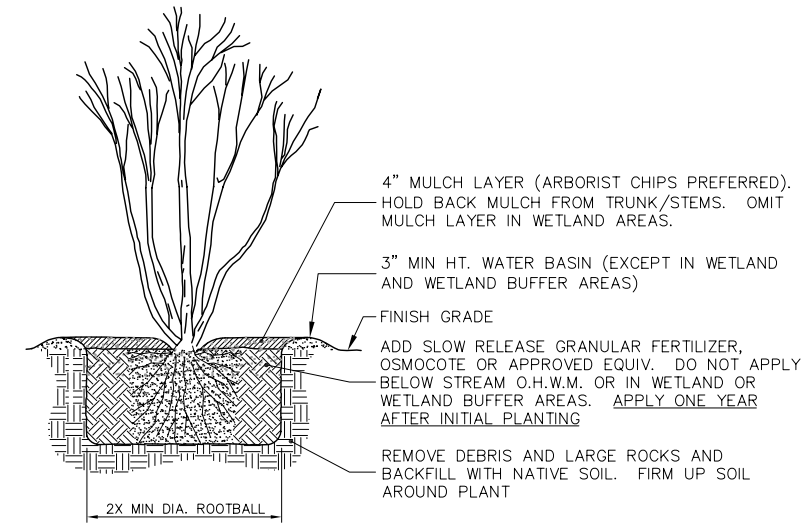

NOTES:
1. PLANTING PIT SHALL NOT BE LESS THAN (2) TIMES THE WIDTH OF THE ROOT BALL DIA.
2. LOOSEN SIDES AND BOTTOM OF PLANT PIT.
3. REMOVE FROM POT & ROUGH-UP ROOT BALL BEFORE INSTALLING. IF PLANT IS EXCEPTIONALLY ROOT-BOUND OR CONTAINS CIRCLING ROOTS, DO NOT PLANT AND RETURN TO NURSERY FOR AN ACCEPTABLE ALTERNATIVE. IF B&B STOCK, REMOVE ALL TWINE/WIRE & REMOVE BURLAP FROM TOP 1/3RD OF ROOTBALL PRIOR TO PLANTING.
4. SOAK PLANTING PIT AFTER PLANTING.
5. TREES OVER 6'-0" HT. MAY NEED STAKING – VERIFY ON SITE WITH THE BIOLOGIST.

TYPICAL TREE/SHRUB PLANTING DETAIL

3 / –

NOT TO SCALE

STATE OF WASHINGTON REGISTERED LANDSCAPE ARCHITECT

MARK S. GARFF
CERTIFICATE NO. 888

springwood

The Watershed Company

MONTGOMERY WATER GROUP, INC.

90% Design Review Submittal - Not for Construction

NO.	REVISION	BY	DATE
–	–	–	–

DESIGNED: DJC | CHECKED: GAB | KENT PROJECT NO. –
DRAWN: DJC | PROJ MANGR: GAB | CONST. MGMT. REVIEW –
APPROVED: _____ CITY ENGINEER | DATE 02/13/06

SCALE: HORIZ: AS NOTED | VERT: AS NOTED

BAR IS ONE INCH ON ORIGINAL DRAWING ADJUST SCALES ACCORDINGLY
0" 1"

KENT WASHINGTON
City of Kent
Public Works Department
Engineering Division

LANDSCAPE DETAILS

COW CREEK REALIGNMENT, LAKE MERIDIAN OUTLET, AND WETLAND RESTORATION IMPROVEMENTS

SHEET L06 OF L06

FILE NO. –

LANDSCAPE DETAILS.DWG D CISAKOWSKI 02/13/06

90% SUBMITTAL

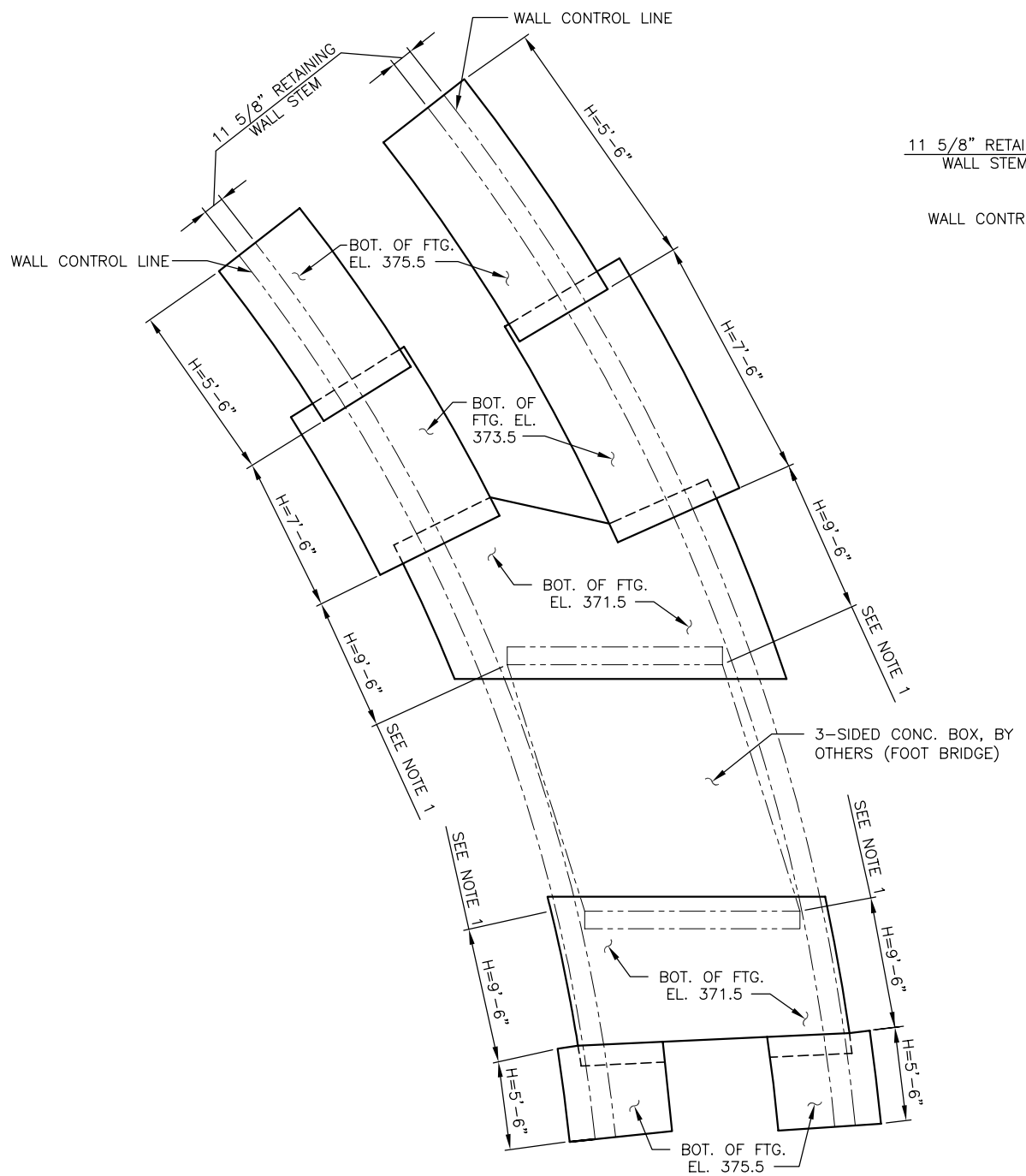

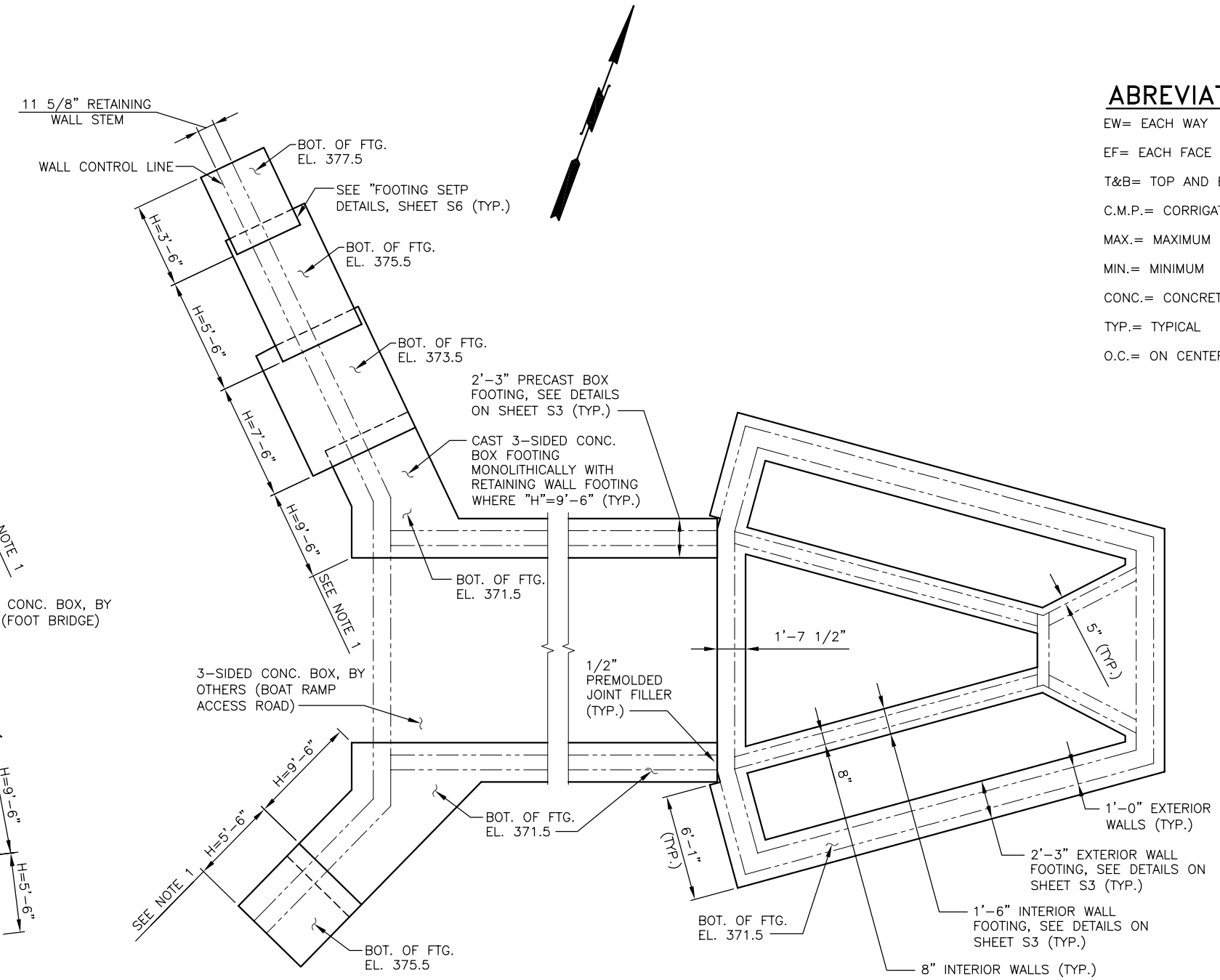

ABREVIATIONS:

EW= EACH WAY

EF= EACH FACE

T&B= TOP AND BOTTOM

C.M.P.= CORRIGATED METAL PIPE

MAX.= MAXIMUM

MIN.= MINIMUM

CONC.= CONCRETE

TYP.= TYPICAL

O.C.= ON CENTER

GENERAL NOTES:

1. CAST-IN-PLACE CONCRETE SHALL BE CLASS 4000.
2. DESIGN SOIL PRESSURE FOR FOUNDATIONS = 3000 PSF
3. UNLESS OTHERWISE SHOWN, THE CONCRETE COVER MEASURED FROM THE FACE OF THE CONCRETE TO THE FACE OF ANY REINFORCING STEEL SHALL BE 2 INCHES.

FOUNDATION LAYOUT NOTES:

1. CONTRACTOR TO DETERMINE LOCATION OF FOOTING STEPS, BASED ON SHEET S5 RETAINING WALL DETAILS.
2. FOR FOOTING DETAILS, SEE SHEET S3 AND S5.

FOOTING LAYOUT

SCALE: 1/4" = 1'-0"

MONTGOMERY WATER GROUP, INC.
Kirkland, WA Gig Harbor, WA

THIS SHEET PREPARED JOINTLY BY CES INC. AND MONTGOMERY WATER GROUP, INC. HYDRAULIC DESIGN AND FACILITY LAYOUT PERFORMED BY MONTGOMERY WATER GROUP, INC. AND STRUCTURAL DESIGN PERFORMED BY CES INC.

JYA-JONG LEE, STATE OF WASHINGTON, 27833, REGISTERED PROFESSIONAL ENGINEER
EXPIRES 11-11-2007

CES Consulting Engineers
BRIDGES • ROADWAYS • STRUCTURES
1211 Fourth Avenue East
Olympia, Washington 98506

NO.	REVISION	BY	DATE
–	–	–	–

DESIGNED: JJL | CHECKED: EMG | KENT PROJECT NO. 5640 | SCALE: HORIZ: VERT:
DRAWN: OJK | PROJ MANGR: JJL | CONST. MGMT. REVIEW
APPROVED: CITY ENGINEER | DATE 1/16/06

BAR IS ONE INCH ON ORIGINAL DRAWING ADJUST SCALES ACCORDINGLY 0" 1"

KENT WASHINGTON
City of Kent
Public Works Department
Engineering Division

FOOTING LAYOUT

COW CREEK LAKE MERIDIAN OUTLET RESTORATION IMPROVEMENTS DESIGN

SHEET S1 OF S8

FILE NO. FTG_LAYUOT.dwg

P:\Other Agencies\MWG-270 (Cow)\Structure\FTG_LAYUOT.dwg, 1/16/2006 11:17:28 AM, ojking

90% SUBMITTAL

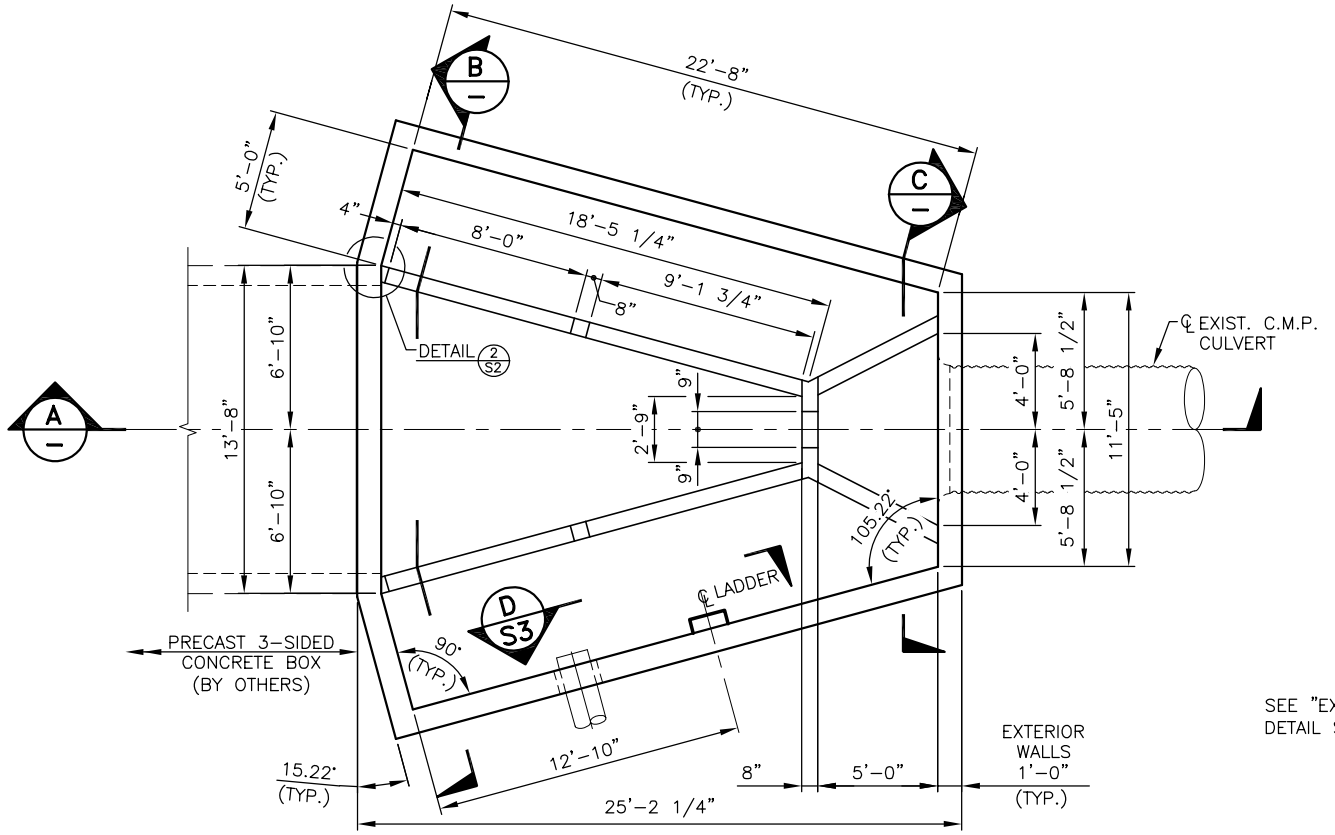

PLAN

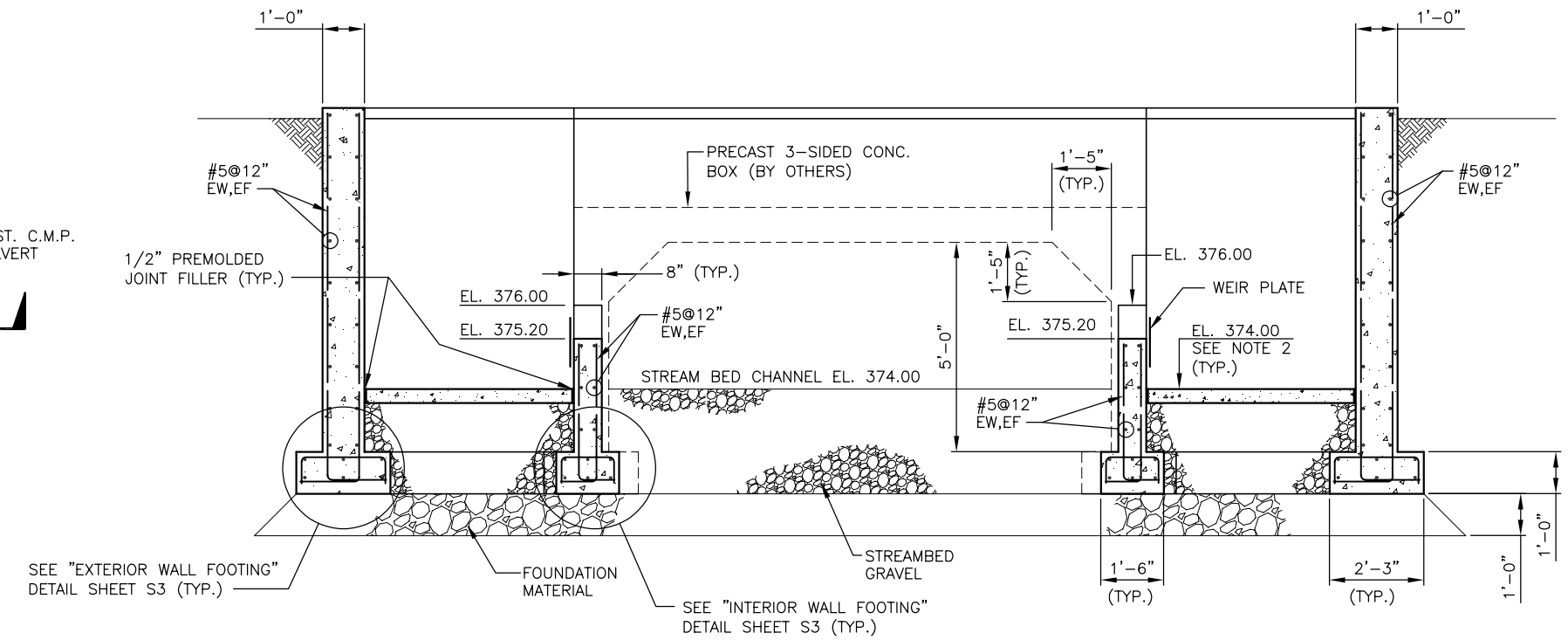

SECTION B

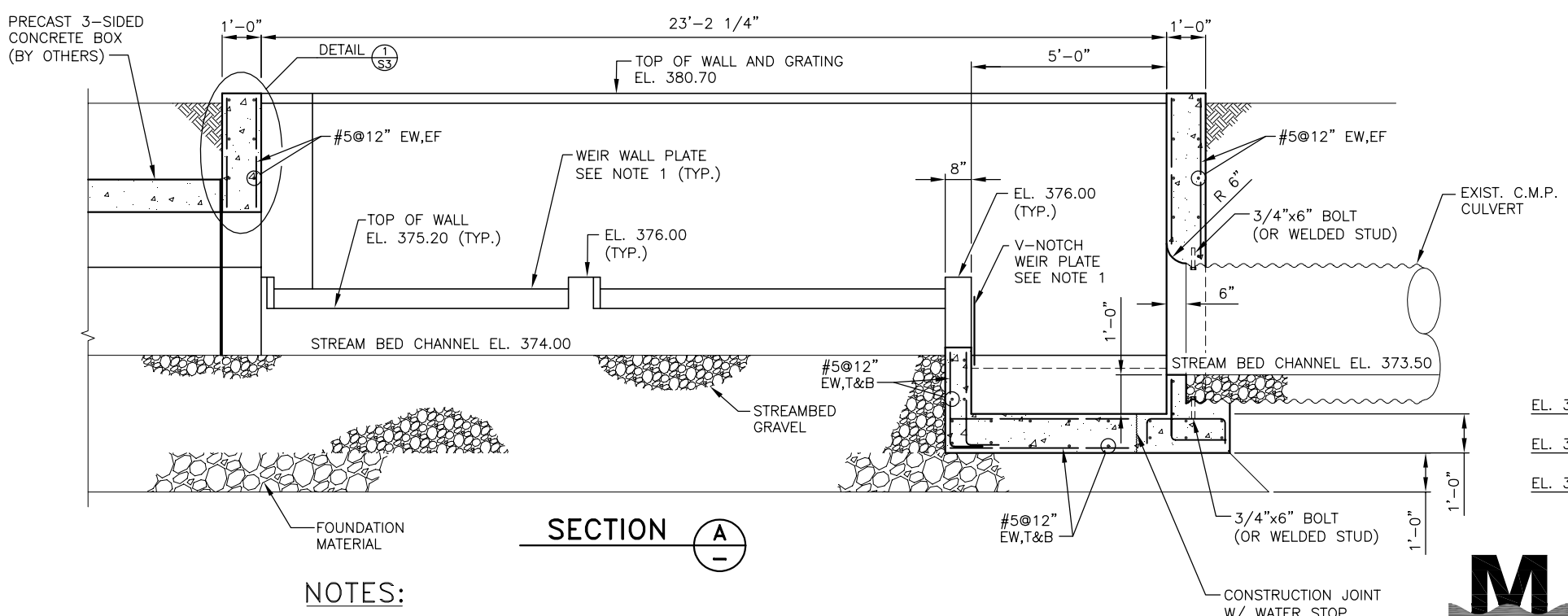

SECTION A

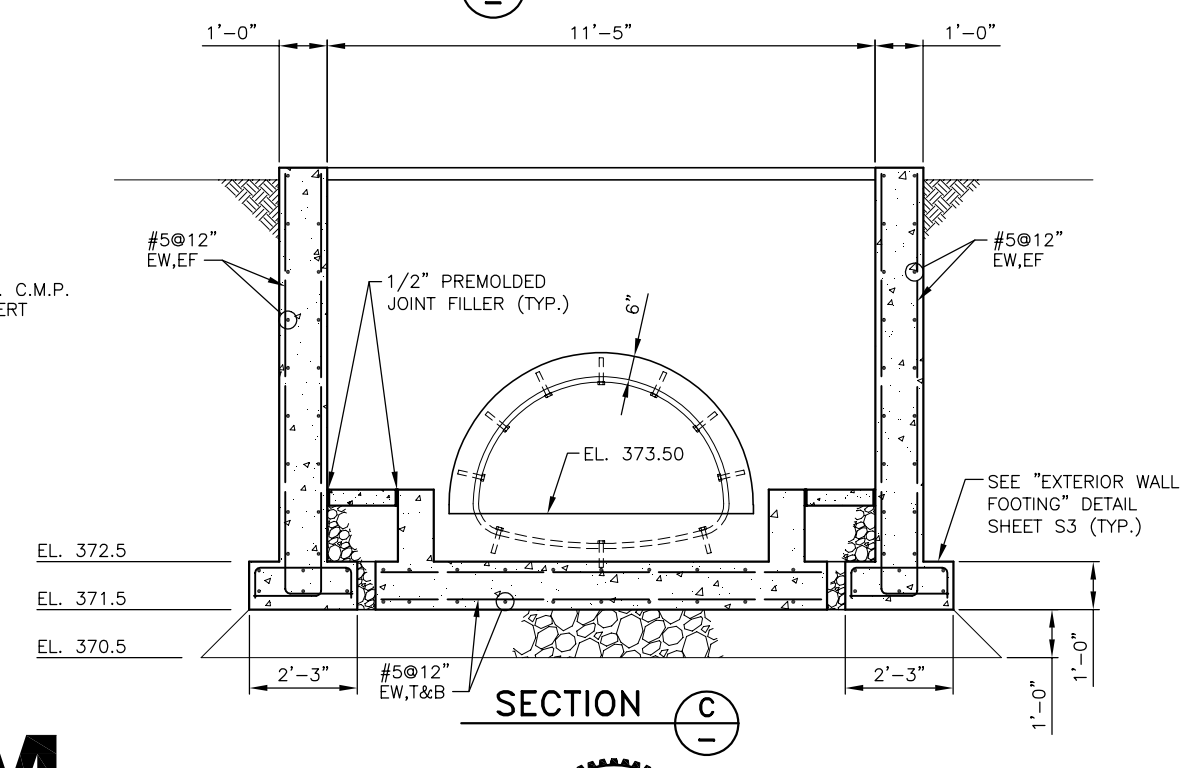

SECTION C

NOTES:

1. FOR WEIR WALL PLATE AND V-NOTCH PLATE ELEVATIONS, SEE CIVIL DRAWINGS.
2. UNREINFORCED 4" THICK CONCRETE SLAB. PROVIDE EXPANSION JOINTS AT 5'-0" MAX. SPACING AND CONTRACTION JOINTS AT 15'-0" MAX. SPACING. SEE SHEET S3 FOR DETAILS.

MONTGOMERY WATER GROUP, INC.
Kirkland, WA Gig Harbor, WA

THIS SHEET PREPARED JOINTLY BY CES INC. AND MONTGOMERY WATER GROUP, INC. HYDRAULIC DESIGN AND FACILITY LAYOUT PERFORMED BY MONTGOMERY WATER GROUP, INC. AND STRUCTURAL DESIGN PERFORMED BY CES INC.

JYR-JONG LEE STATE OF WASHINGTON 27833 REGISTERED PROFESSIONAL ENGINEER
EXPIRES 11-11-2007

Consulting Engineers
BRIDGES • ROADWAYS • STRUCTURES
CES
1211 Fourth Avenue East
Olympia, Washington 98506

NO.	REVISION	BY	DATE
–	–	–	–

DESIGNED: JJL | CHECKED: EMG | KENT PROJECT NO. 5640 | SCALE: HORIZ: VERT:
DRAWN: GRJ | PROJ MANGR: JJL | CONST. MGMT. REVIEW
APPROVED: CITY ENGINEER | DATE 1/16/06

BAR IS ONE INCH ON ORIGINAL DRAWING ADJUST SCALES ACCORDINGLY 0" 1"

KENT WASHINGTON
City of Kent
Public Works Department
Engineering Division

LABYRINTH WEIR PLAN AND SECTIONS

COW CREEK LAKE MERIDIAN OUTLET RESTORATION IMPROVEMENTS DESIGN

SHEET S2 OF S8
FILE NO.

P:\Other Agencies\MWG-270 (Cow)\Structure\WEIR LAYOUT.dwg, 1/16/2006 11:16:28 AM, ojking

90% SUBMITTAL

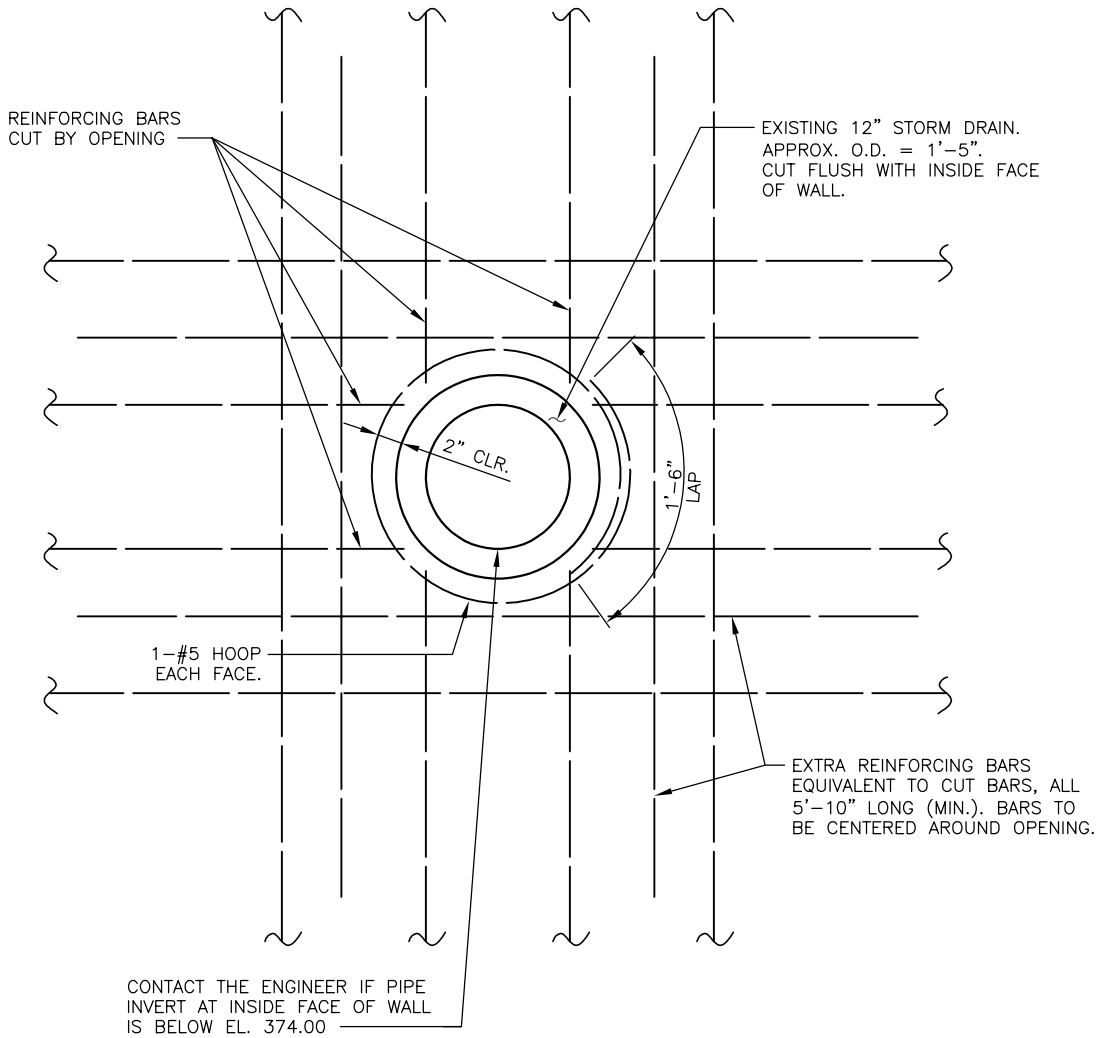

SECTION D/S2

SCALE: 1 1/2"=1'-0"

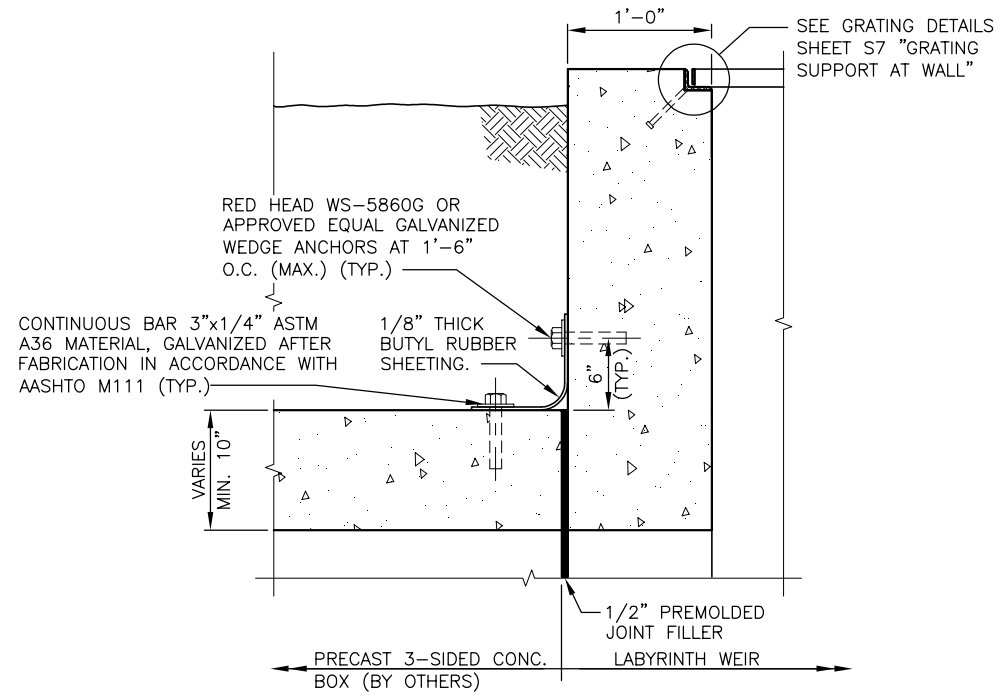

DETAIL 1/S2

REINFORCING NOT SHOWN FOR CLARITY.

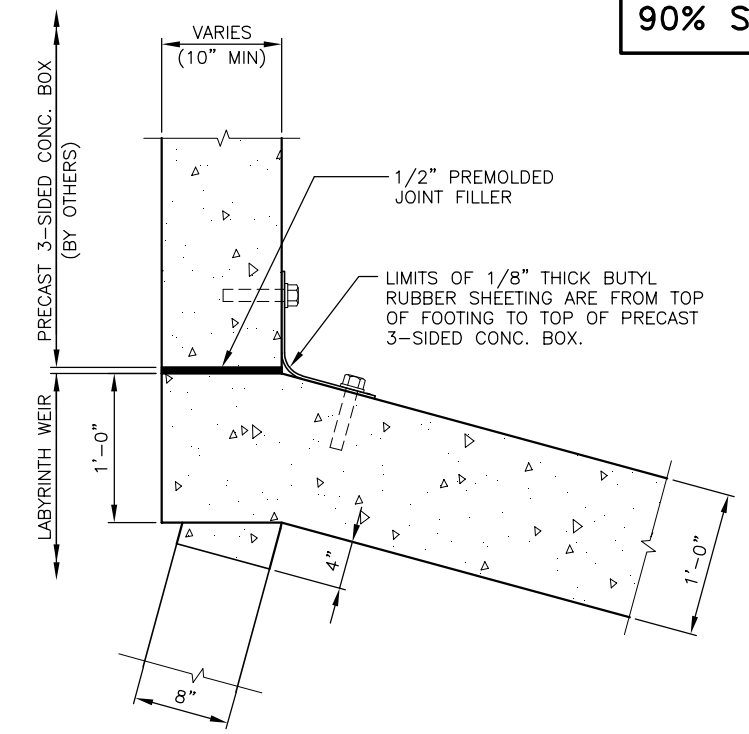

DETAIL 2/S2

REINFORCING NOT SHOWN FOR CLARITY. FOR DETAILS NOT SHOWN, DETAIL 1

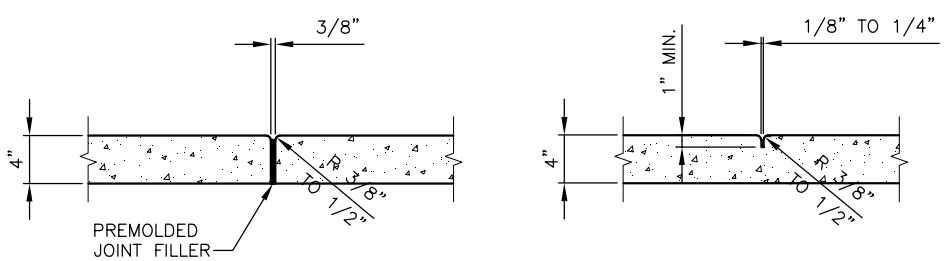

EXPANSION JOINT

CONTRACTION JOINT

CONCRETE SLAB JOINT DETAILS

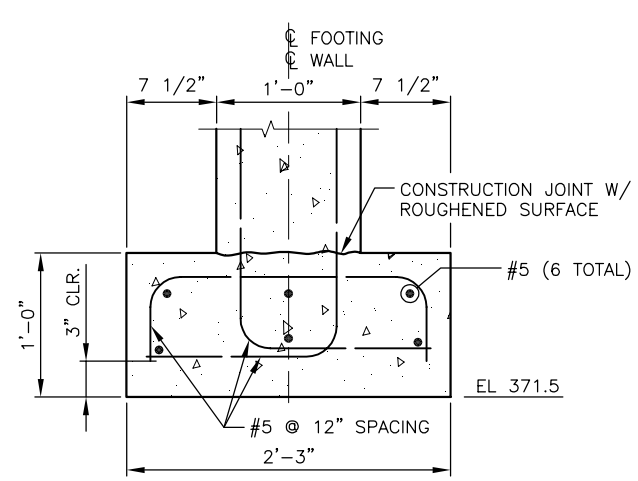

EXTERIOR WALL FOOTING

UNLESS OTHERWISE SHOWN, THE CONCRETE COVER MEASURED FROM THE FACE OF THE FOOTING CONCRETE TO THE FACE OF ANY REINFORCING STEEL SHALL BE 2 INCHES.

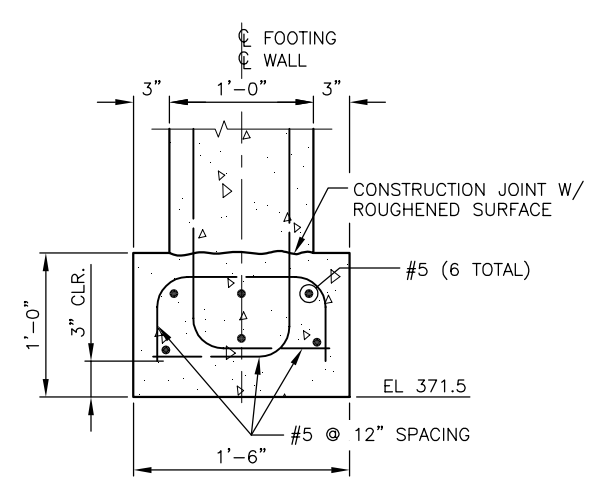

INTERIOR WALL FOOTING

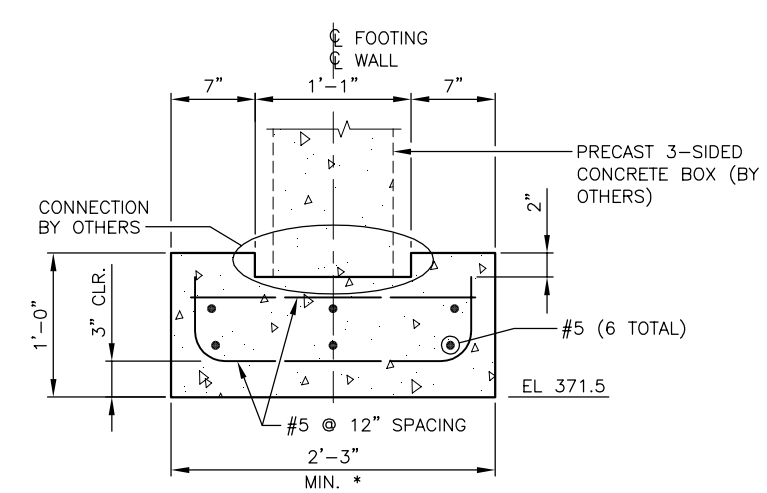

PRECAST BOX FOOTING

* CAST FOOTING CONCRETE FOR PRECAST BOX MONOLTHICALLY WITH RETAINING WALL FOOTING WHEN "H"=9'-6". SEE "FOOTING LAYOUT" SHEET S1.

MONTGOMERY WATER GROUP, INC.
Kirkland, WA Gig Harbor, WA

THIS SHEET PREPARED JOINTLY BY CES INC. AND MONTGOMERY WATER GROUP, INC. HYDRAULIC DESIGN AND FACILITY LAYOUT PERFORMED BY MONTGOMERY WATER GROUP, INC. AND STRUCTURAL DESIGN PERFORMED BY CES INC.

JYA-JONG LEE STATE OF WASHINGTON 27833 REGISTERED PROFESSIONAL ENGINEER
EXPIRES 11-11-2007

CES Consulting Engineers
BRIDGES • ROADWAYS • STRUCTURES
1211 Fourth Avenue East
Olympia, Washington 98506

NO.	REVISION	BY	DATE
–	–	–	–

DESIGNED: JJL | CHECKED: EMG | KENT PROJECT NO. 5640 | SCALE: HORIZ: VERT:
DRAWN: OJK | PROJ MANGR: JJL | CONST. MGMT. REVIEW
APPROVED: CITY ENGINEER | DATE 1/16/06

BAR IS ONE INCH ON ORIGINAL DRAWING ADJUST SCALES ACCORDINGLY 0" 1"

City of Kent
Public Works Department
Engineering Division

LABYRINTH WEIR DETAILS 1

COW CREEK LAKE MERIDIAN OUTLET RESTORATION IMPROVEMENTS DESIGN

SHEET S3 OF S8
FILE NO. SHEET 2.dwg

P:\Other Agencies\MWG-270 (Cow)\Structure\SHEET 2.dwg, 1/16/2006 11:19:29 AM, ojking

90% SUBMITTAL

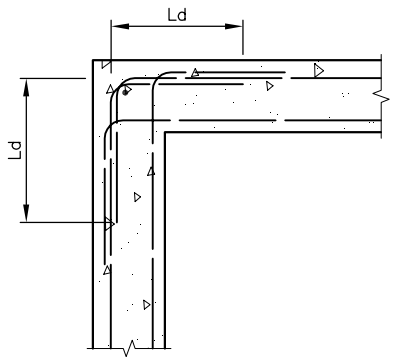

CORNER

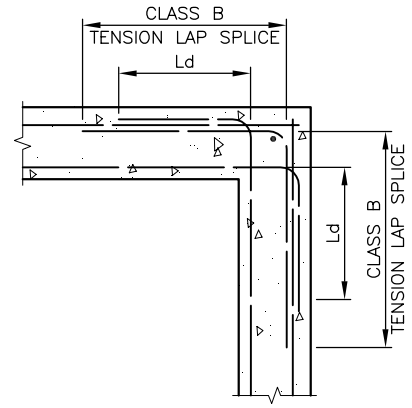

CORNER
OPTIONAL

TYPICAL DOUBLE CUTAIN

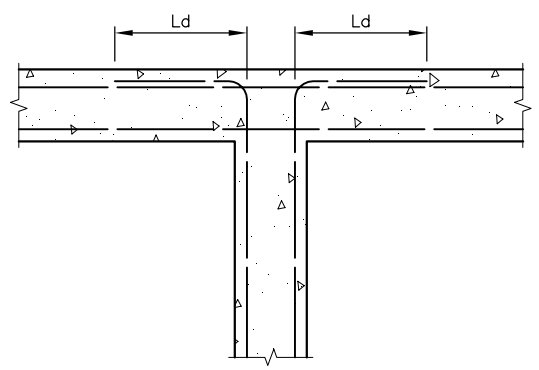

TYPICAL INTERSECTION

REINFORCING AT WALL INTERSECTIONS

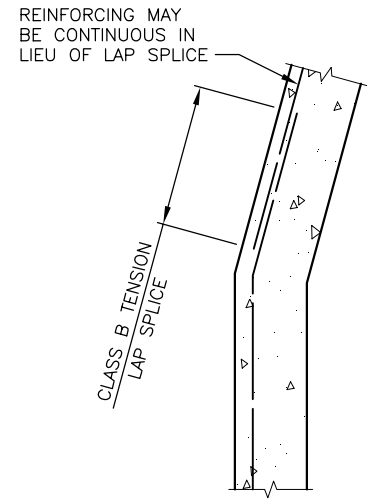

REINFORCING AT CORNERS

MINIMUM SPLICE LENGTH (INCHES)

CONCRETE– F'c= 4000 PSI				
BAR SIZE	Ld	TENSION LAP (TOP)		COMPRESSION LAP
		CLASS A	CLASS B	
#3	19	19	24	12
#4	25	25	32	15
#5	31	31	40	19
#6	37	37	48	23
#7	54	54	70	27
#8	62	62	80	30
#9	70	70	91	34
#10	79	79	102	38
#11	87	87	113	43

REINF. DEVELOPMENT AND LAP SPLICE LENGTHS

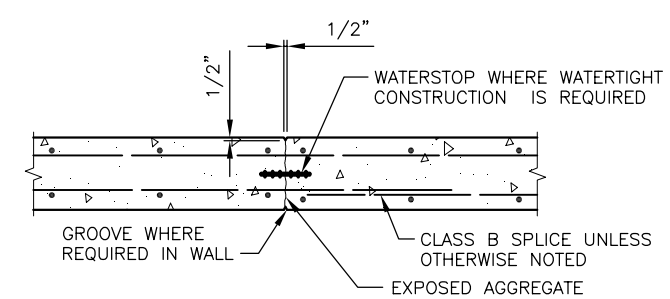

VERTICAL WALL OR SLAB CONSTRUCTION JOINT

MONTGOMERY WATER GROUP, INC.
Kirkland, WA Gig Harbor, WA

THIS SHEET PREPARED JOINTLY BY CES INC. AND MONTGOMERY WATER GROUP, INC. HYDRAULIC DESIGN AND FACILITY LAYOUT PERFORMED BY MONTGOMERY WATER GROUP, INC. AND STRUCTURAL DESIGN PERFORMED BY CES INC.

JYR-JONG LEE STATE OF WASHINGTON 27833 REGISTERED PROFESSIONAL ENGINEER
EXPIRES 11-11-2007

CES Consulting Engineers
BRIDGES • ROADWAYS • STRUCTURES
1211 Fourth Avenue East
Olympia, Washington 98506

NO.	REVISION	BY	DATE
–	–	–	–

DESIGNED: JJL | CHECKED: EMG | KENT PROJECT NO. 5640 | SCALE: HORIZ: ____ VERT: ____
DRAWN: DRT | PROJ MANGR: JJL | CONST. MGMT. REVIEW
APPROVED: ____ CITY ENGINEER | DATE 1/16/06

BAR IS ONE INCH ON ORIGINAL DRAWING ADJUST SCALES ACCORDINGLY
0" 1"

KENT WASHINGTON
City of Kent
Public Works Department
Engineering Division

LABYRINTH WEIR DETAILS 2

COW CREEK LAKE MERIDIAN OUTLET RESTORATION IMPROVEMENTS DESIGN

SHEET S4 OF S8
FILE NO. WEIR DET 2.dwg

P:\Other Agencies\MWG-270 (Cow)\Structure\WEIR DET 2.dwg, 1/16/2006 11:25:46 AM, ojking

90% SUBMITTAL

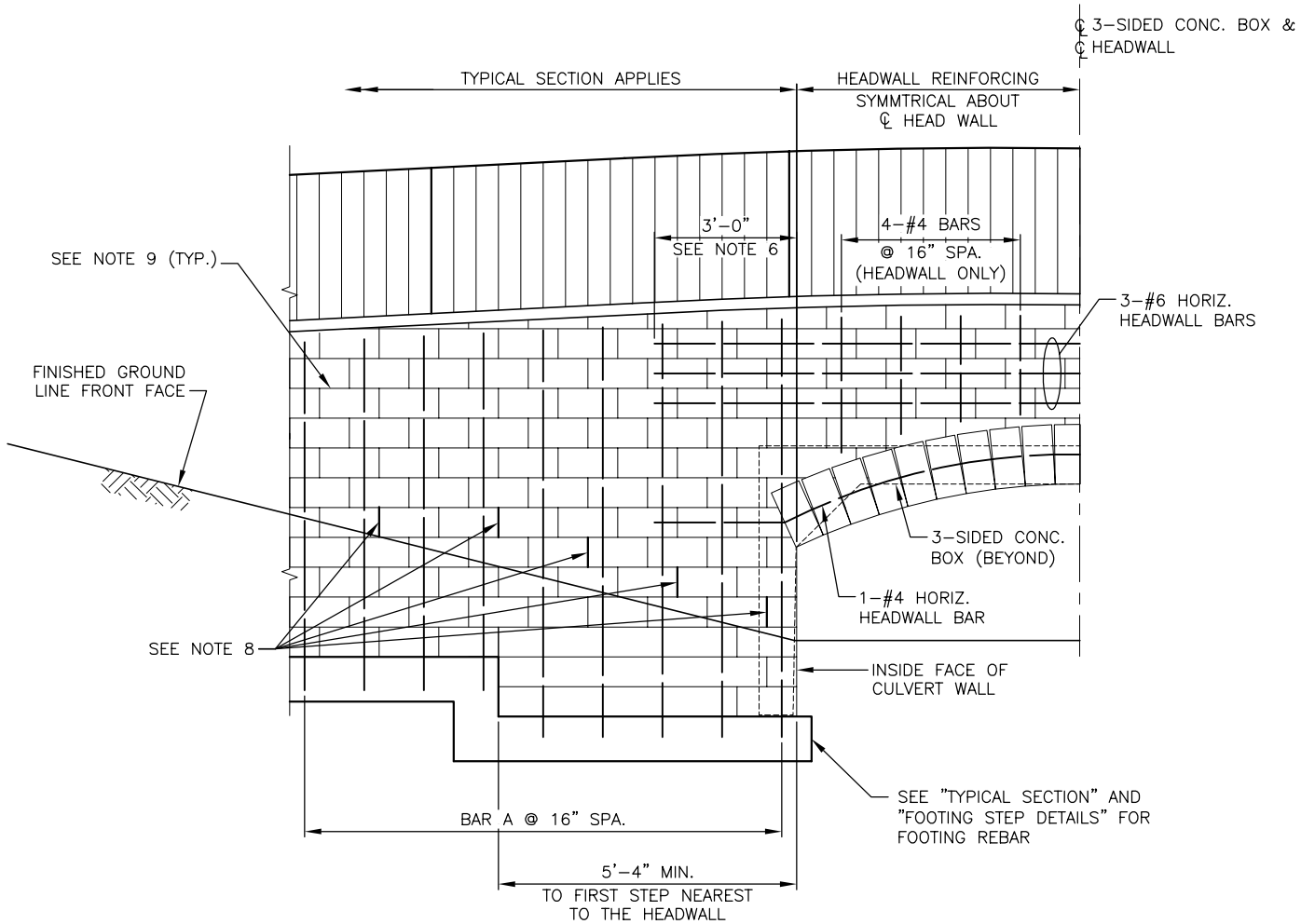

TYPICAL ELEVATION

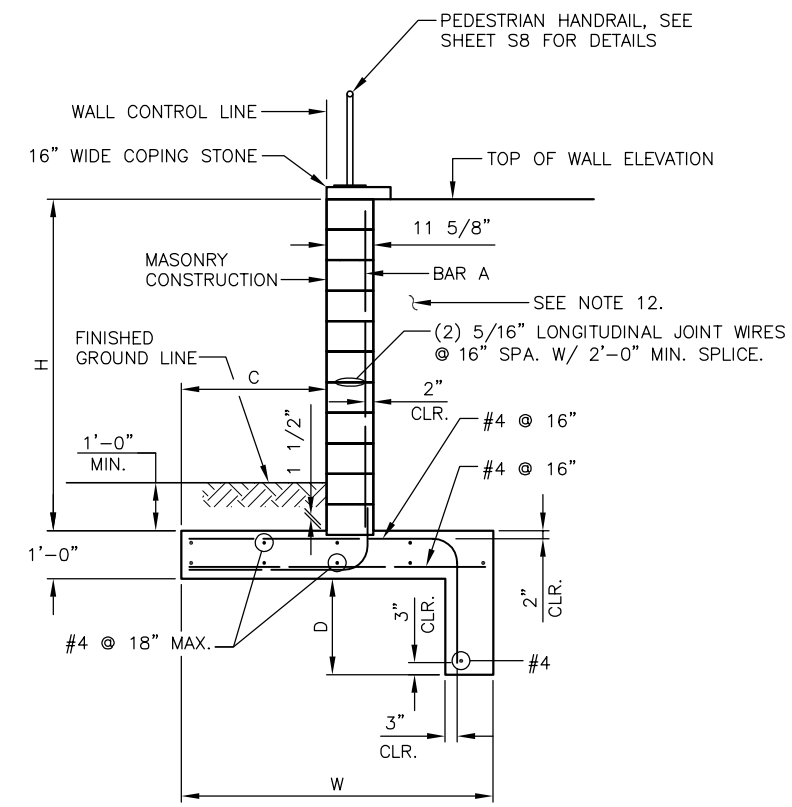

TYPICAL SECTION

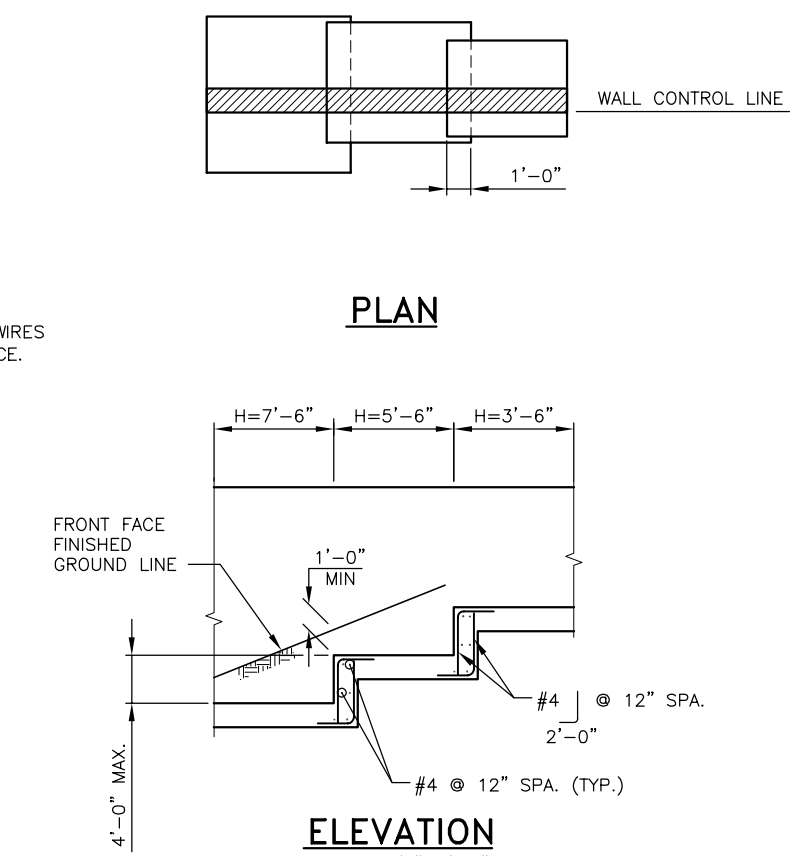

FOOTING STEP DETAILS

NOTES:

1. CAST-IN-PLACE CONCRETE SHALL BE CLASS 4000.
2. COMPRESSIVE STRENGTH OF CONCRETE MASONRY UNITS, f'm=2500 PSI.
3. MASONRY CONSTRUCTION SHALL BE IN ACCORDANCE WITH THE SPECIAL PROVISIONS.
4. DESIGN SOIL PRESSURE FOR FOUNDATIONS= 3000 PSF.
5. NO VERTICAL OR HORIZONTAL EXPANSION JOINTS SHALL BE PLACED IN RETAINING WALLS.
6. EXTEND HORIZONTAL HEADWALL BARS 3'-0" PAST INSIDE FACE OF CULVERT WALL.
7. FILL ALL CONCRETE MASONRY UNIT CELLS WITH GROUT.
8. OMIT MORTAR FROM VERTICAL JOINT IN FIRST COURSE ABOVE PROPOSED GROUND LINE AT 32" MAX. CENTERS FOR WEEP HOLES.
9. LONGITUDINAL JOINT WIRES NOT REQUIRED IN HEADWALL UNITS, SEE "TYPICAL SECTION" DETAIL.
10. FOR ELEVATIONS NOT SHOWN, SEE FOUNDATION LAYOUT AND CIVIL SHEETS.
11. RETINAING WALL WAS DESIGNED FOR 250 PSF LIVE LOAD SURCHARGE. CONSTRUCTION LOADS AND BACKFILL COMPACTION SHALL NOT EXCEED THIIS LOAD.
12. FOR BACKFILL REQUIREMENTS SEE WSDOT STD. PLAN D-4.

WALL TABLE

MAX. H	9'-6"	7'-6"	5'-6"	3'-6"
W	*	6'-6"	5'-0"	4'-0"
C	1'-3"	2'-6"	1'-3"	1'-0"
D	0'-0"	1'-6"	1'-3"	1'-0"
BAR A	#9@16"	#6@16"	#4@16"	#4@16"

* SEE FOUNDATION LAYOUT FOR FOOTING DIMENSIONS CORRESPONDING TO H=9'-6"

MONTGOMERY WATER GROUP, INC.
Kirkland, WA Gig Harbor, WA

THIS SHEET PREPARED JOINTLY BY CES INC. AND MONTGOMERY WATER GROUP, INC. HYDRAULIC DESIGN AND FACILITY LAYOUT PERFORMED BY MONTGOMERY WATER GROUP, INC. AND STRUCTURAL DESIGN PERFORMED BY CES INC.

JYR-JONG LEE STATE OF WASHINGTON 27833 REGISTERED PROFESSIONAL ENGINEER
EXPIRES 11-11-2007

CES Consulting Engineers
BRIDGES • ROADWAYS • STRUCTURES
1211 Fourth Avenue East
Olympia, Washington 98506

NO.	REVISION	BY	DATE
–	–	–	–

DESIGNED: JJL | CHECKED: EMG | KENT PROJECT NO. 5640 | SCALE: HORIZ: VERT:
DRAWN: DRT | PROJ MANGR: JJL | CONST. MGMT. REVIEW
APPROVED: CITY ENGINEER | DATE 1/16/06

BAR IS ONE INCH ON ORIGINAL DRAWING ADJUST SCALES ACCORDINGLY
0" 1"

KENT WASHINGTON
City of Kent
Public Works Department
Engineering Division

RETAINING WALL DETAILS

COW CREEK LAKE MERIDIAN OUTLET RESTORATION IMPROVEMENTS DESIGN

SHEET S5 OF S8
FILE NO. R1.dwg

P:\Other Agencies\MWG-270 (Cow)\Structure\R1.dwg, 1/16/2006 11:30:25 AM, ojking

90% SUBMITTAL

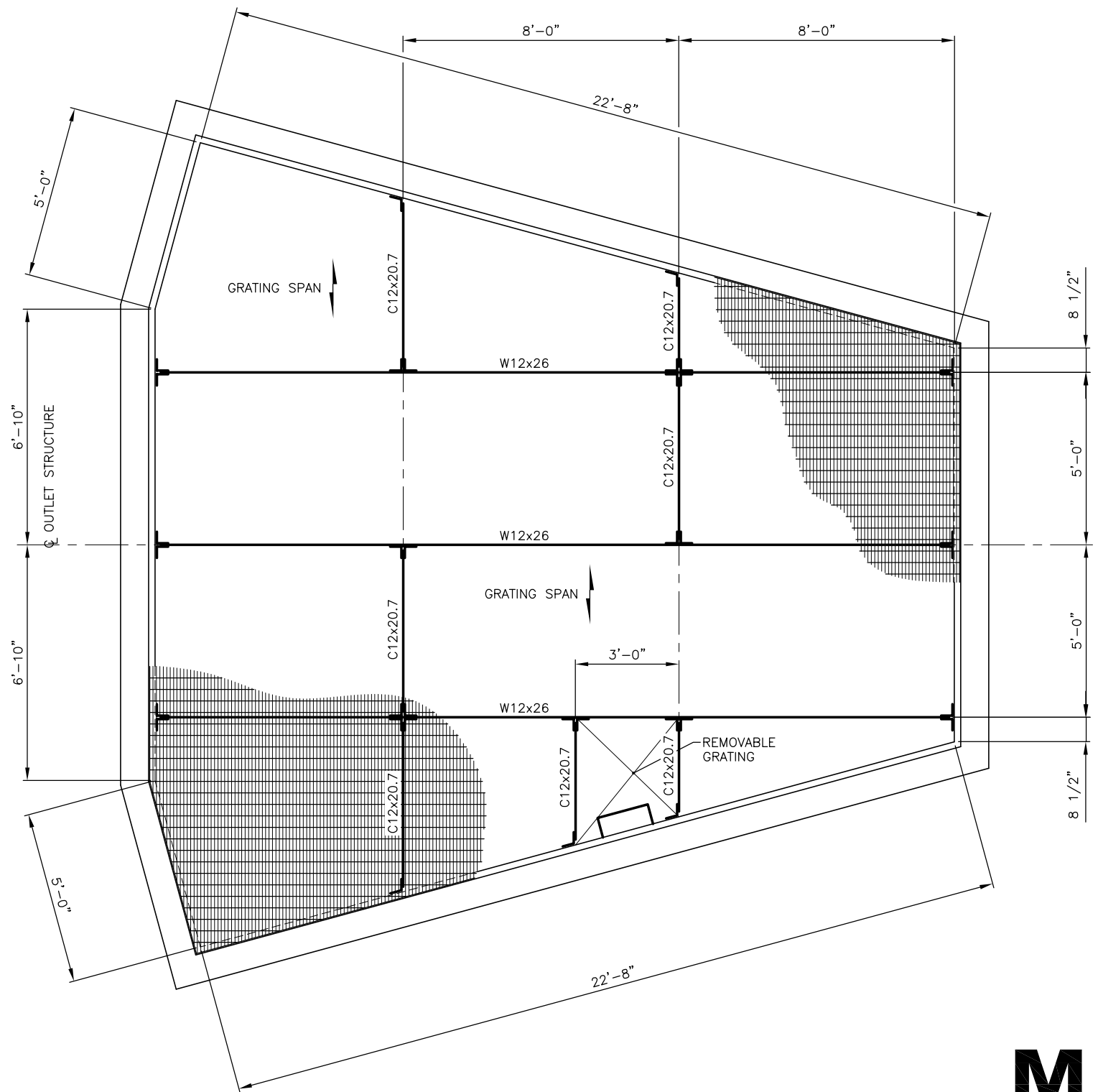

GRATING PLAN

SCALE: 1/4"=1'-0"

GRATING NOTES:

1. GRATING SHALL CONFORM TO METAL BAR GRATING MANUAL OF N.A.A.M.M. MARK W-19-4.
2. ALL GRATING SHALL BE WELDED GALVANIZED STEEL. BEARING BAR SIZE SHALL BE 1 1/2" X 3/16"
3. END BAND SHALL BE 1/4" LESS THAN GRATING DEPTH AND FLUSH WITH TOP OF GRATING. WELD ALL BEARING AND CROSS BARS TO END BANDS.
4. PROVIDE 4 SS GRATING HOLD DOWN CLIPS AT EACH CORNER. TYPICAL EACH PIECE.

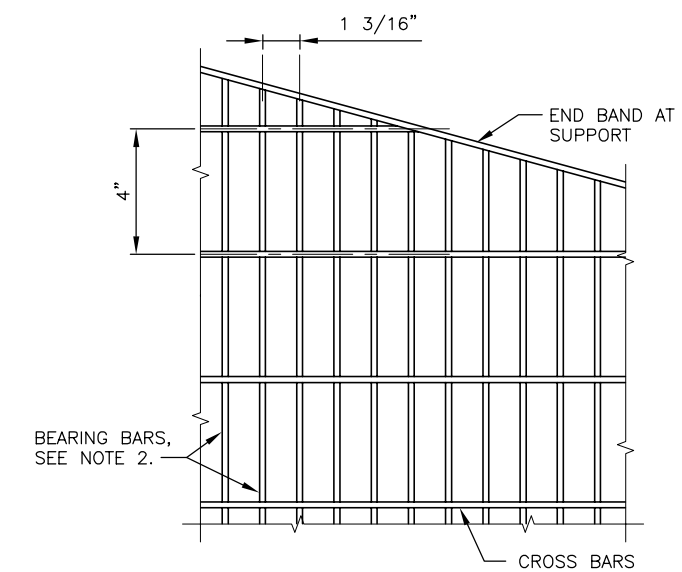

GRATING SCHEDULE

N.T.S

MONTGOMERY WATER GROUP, INC.
Kirkland, WA Gig Harbor, WA

THIS SHEET PREPARED JOINTLY BY CES INC. AND MONTGOMERY WATER GROUP, INC. HYDRAULIC DESIGN AND FACILITY LAYOUT PERFORMED BY MONTGOMERY WATER GROUP, INC. AND STRUCTURAL DESIGN PERFORMED BY CES INC.

JYR-JONG LEE STATE OF WASHINGTON 27833 REGISTERED PROFESSIONAL ENGINEER
EXPIRES 11-11-2007

CES Consulting Engineers
BRIDGES • ROADWAYS • STRUCTURES
1211 Fourth Avenue East
Olympia, Washington 98506

NO.	REVISION	BY	DATE
0	ISSUED FOR 60% SUBMITTAL.	R.L.B.	11/10/05

DESIGNED: J.J.L. CHECKED: E.M.G. KENT PROJECT NO. 5640 SCALE: HORIZ: VERT:
DRAWN: G.R.J. PROJ MANGR: J.J.L. CONST. MGMT. REVIEW
APPROVED: CITY ENGINEER DATE 1/16/06

BAR IS ONE INCH ON ORIGINAL DRAWING ADJUST SCALES ACCORDINGLY 0" 1"

KENT WASHINGTON
City of Kent
Public Works Department
Engineering Division

GRATING DETAILS 1

COW CREEK LAKE MERIDIAN OUTLET RESTORATION IMPROVEMENTS DESIGN

SHEET S6 OF S8
FILE NO.

P:\Other Agencies\MWG-270 (Cow)\Structure\GRATING DETAILS 1.dwg, 1/16/2006 11:32:41 AM, ojking

90% SUBMITTAL

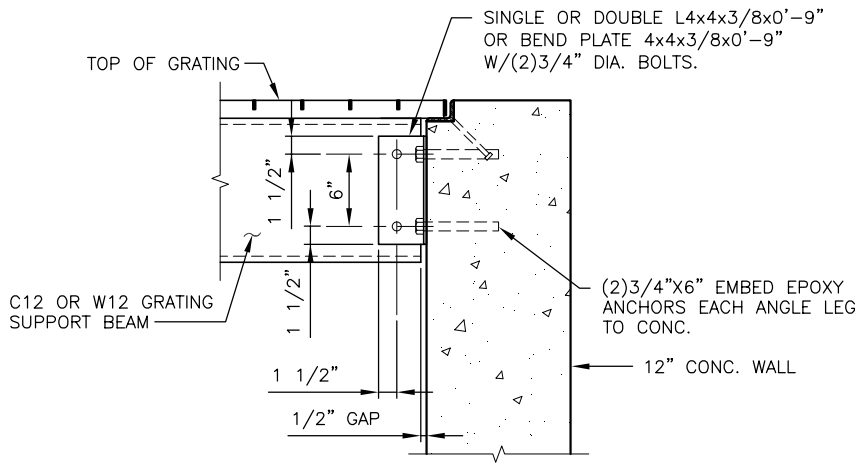

TYP. BEAM TO WALL CONNECTION

SCALE: 1 1/2"=1'-0"

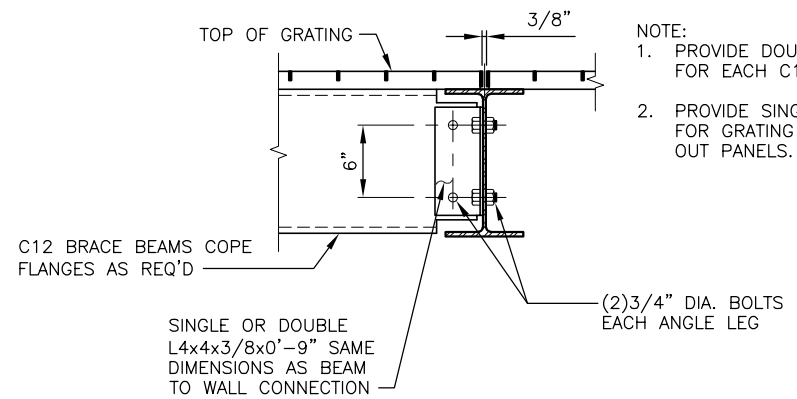

NOTE:
1. PROVIDE DOUBLE ANGLE CONN. FOR EACH C12 BRACE BEAM.
2. PROVIDE SINGLE ANGLE CONN. FOR GRATING SUPPORT AT LIFT-OUT PANELS.

TYP. BEAM TO BEAM CONNECTION

SCALE: 1 1/2"=1'-0"

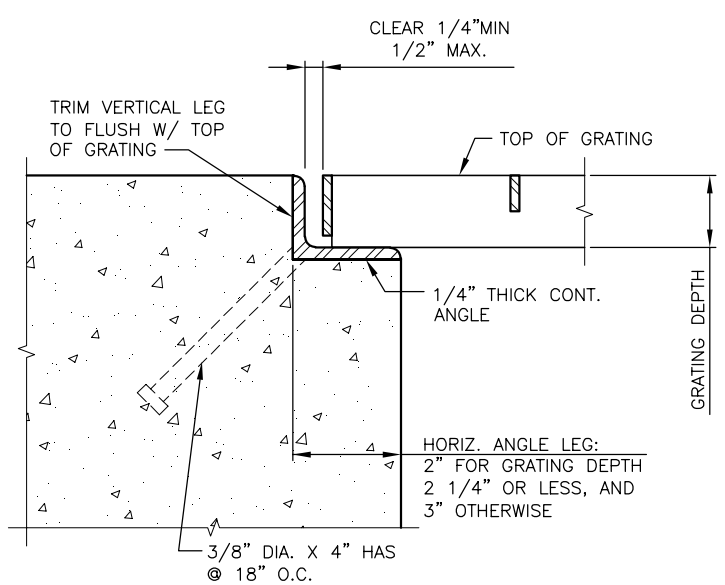

GRATING SUPPORT AT WALL

SCALE: 3"=1'-0"

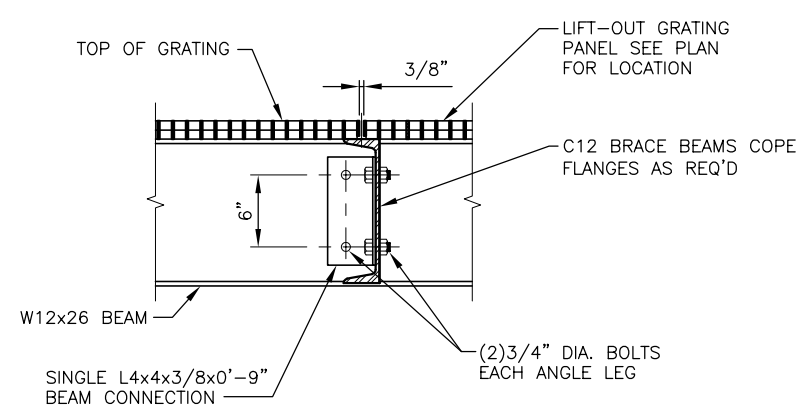

GRATING SUPPORT AT LIFT-OUT PANEL

SCALE: 1 1/2"=1'-0"

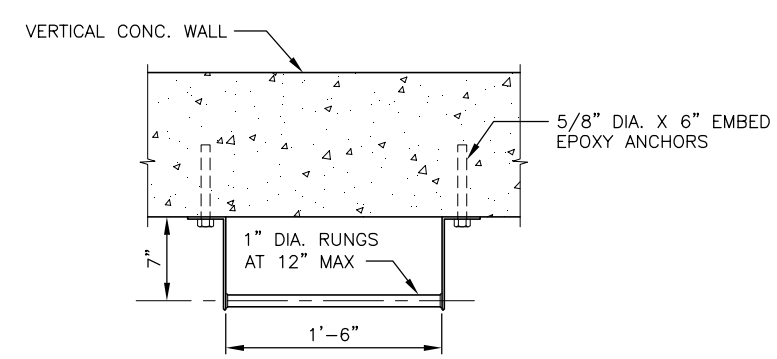

LADDER DETAILS

N.T.S

MONTGOMERY WATER GROUP, INC.
Kirkland, WA Gig Harbor, WA

THIS SHEET PREPARED JOINTLY BY CES INC. AND MONTGOMERY WATER GROUP, INC. HYDRAULIC DESIGN AND FACILITY LAYOUT PERFORMED BY MONTGOMERY WATER GROUP, INC. AND STRUCTURAL DESIGN PERFORMED BY CES INC.

JYR-JONG LEE — STATE OF WASHINGTON — 27833 — REGISTERED PROFESSIONAL ENGINEER
EXPIRES 11-11-2007

Consulting Engineers
BRIDGES • ROADWAYS • STRUCTURES
1211 Fourth Avenue East
Olympia, Washington 98506

NO.	REVISION	BY	DATE
0	ISSUED FOR 60% SUBMITTAL.	R.L.B.	11/10/03

DESIGNED: J.J.L. | CHECKED: E.M.G. | KENT PROJECT NO. 5640 | SCALE: HORIZ: VERT:
DRAWN: G.R.J. | PROJ MANGR: J.J.L. | CONST. MGMT. REVIEW
APPROVED: CITY ENGINEER | DATE 1/16/06

BAR IS ONE INCH ON ORIGINAL DRAWING ADJUST SCALES ACCORDINGLY 0" 1"

City of Kent
Public Works Department
Engineering Division

GRATING DETAILS 2

COW CREEK LAKE MERIDIAN OUTLET RESTORATION IMPROVEMENTS DESIGN

SHEET S7 OF S8
FILE NO.

P:\Other Agencies\MWG-270 (Cow)\Structure\GRATING DETAILS 2.dwg, 1/16/2006 11:34:30 AM, ojking

90% SUBMITTAL

NOTES:

1. MATERIAL FOR PEDESTRIAN HANDRAIL SHALL BE STEEL (ASTM A120) OR ALUMINUM (ASTM B241 OR B429 ALLORY 6061–T6.
2. ALL PICKETS AND POSTS SHALL BE PLUMB AFTER INSTALLATION
3. CONTRACTOR SHALL SUBMIT SHOP PLANS FOR ENGINEER'S APPROVAL PRIOR TO FABRICATION.

PEDESTRIAN RAIL (GALV. STEEL)

GALVANIZED PEDESTRIAN RAIL SHALL BE FABRICATED AND INSTALLED IN ACCORDANCE WITH THESE SPECIAL PROVISIONS AND STANDARD DRAWING 4–200.

GALVANIZED STEEL PEDESTRIAN RAIL SHALL CONFORM TO ASTM DESIGNATION A120. ALL WELDING SHALL CONFORM TO AMERICAN WELDING SOCIETY STRUCTURAL WELDING CODE AWS D1.1–72. AFTER FABRICATION EACH SECTION OF RAILING SHALL BE HOT–DIPPED GALVANIZED WITH A MINIMUM ZINC COATING OF 2 OUNCES PER SQUARE FOOT. ALL BURRS AND SHARP EDGES SHALL BE REMOVED PRIOR TO GALVANIZING. FIELD WELDS SHALL BE GALVANIZED WITH "GALVALLOY" OR APPROVED EQUIVALENT. PAINTING OF WELDS WILL NOT BE PERMITTED.

HORIZONTAL RAILS AND VERTICAL SUPPORT POSTS SHALL BE 2 INCH DIAMETER AND BALUSTERS SHALL BE 1 INCH DIAMETER STANDARD WEIGHT GALVANIZED STEEL PIPE. RAILS, POSTS & BALUSTERS SHALL BE MACHINE CUT TO PROVIDE A UNIFORM LENGTH PRIOR TO ASSEMBLY.

RAILING SHALL BE ERECTED AND ADJUSTED, IF NECESSARY, TO ASSURE A CONTINUOUS LINE AND GRADE. FINISHED HEIGHT IS TO BE 42 INCHES ABOVE PEDESTRIAN SURFACE. EXPANSION JOINTS SHALL BE PROVIDED AT INTERVALS SHOWN ON THE STANDARD DRAWING.

PEDESTRIAN RAIL (ALUMINUM)

ALUMINUM PEDESTRIAN RAIL SHALL BE FABRICATED AND INSTALLED IN ACCORDANCE WITH THESE SPECIAL PROVISIONS AND STANDARD DRAWING 4–200.

ALUMINUM PEDESTRIAN RAIL SHALL BE NATURAL ALUMINUM COLOR.

IF ANODIZATION IS SPECIFIED, ALL ALUMINUM PARTS SHALL BE GIVEN A CLEAR ANODIC COATING AT LEAST 0.0006 INCH THICK AND SHALL BE SEALED TO MEET THE REQUIREMENTS OF ASTM B 136 AND SHALL HAVE A UNIFORM FINISH.

WELDING OF ALUMINUM SHALL BE IN ACCORDANCE WITH THE "STRUCTURAL WELDING CODE– ALUMINUM, AWS D 1.2".

ALL MATERIALS USED IN THE FABRICATION OF ALUMINUM PEDESTRIAN RAIL SHALL MEET THE REQUIREMENTS OF ASTM B241 OR B429 ALLOY 6061–T6 SCHEDULE 40 (STD. PIPE).

HORIZONTAL RAILS AND VERTICAL SUPPORT POSTS SHALL BE 1.9" O.D. AND BALUSTERS SHALL BE 1.05" O.D. STANDARD WEIGHT ALUMINUM PIPE. RAILS, POSTS & BALUSTERS SHALL BE MACHINE CUT TO PROVIDE A UNIFORM LENGTH PRIOR TO ASSEMBLY.

SEE TEXT SECTION 4–16

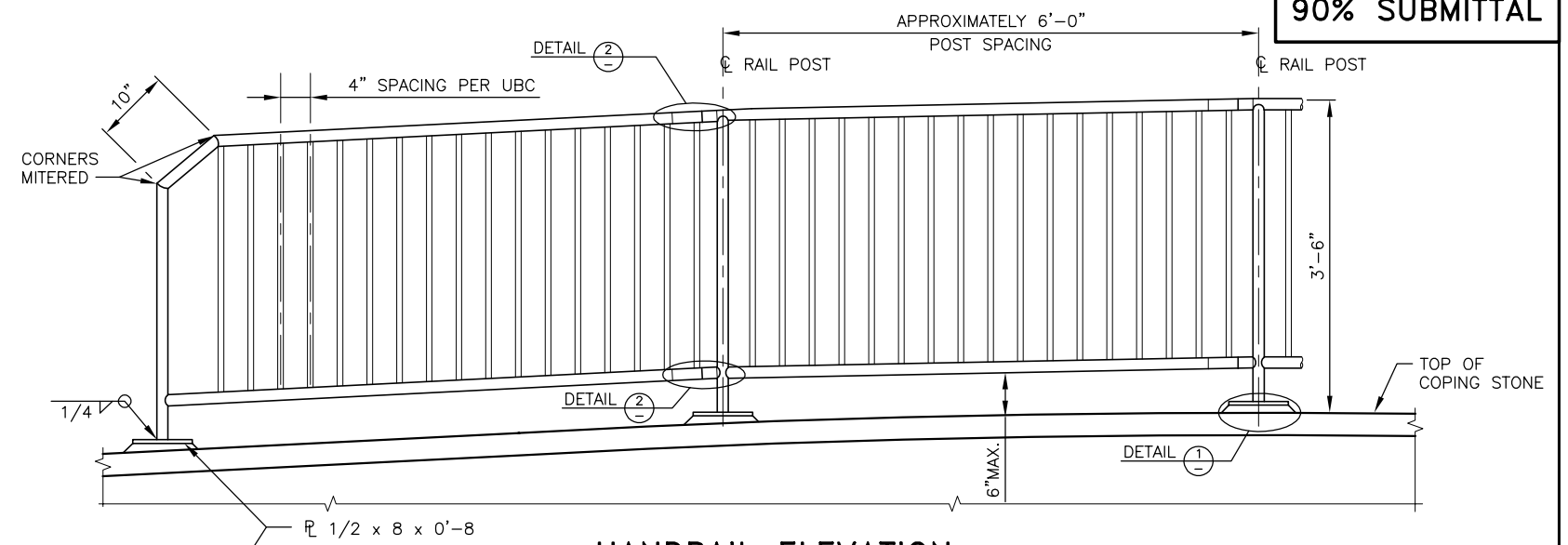

HANDRAIL ELEVATION
SCALE: 1–"=1'–0"

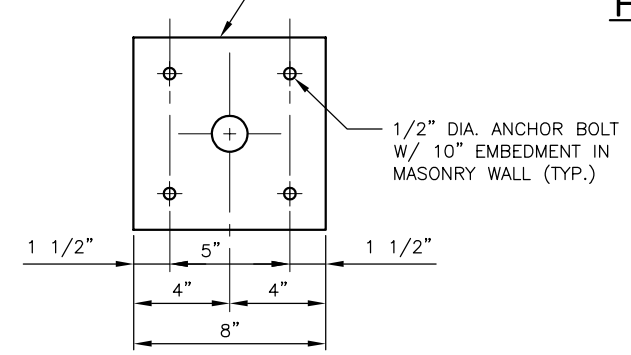

HANDRAIL PLATE
SCALE: 3" = 1'–0"

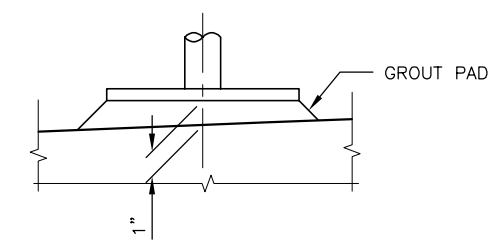

DETAIL 1
SCALE: 3" = 1'–0"

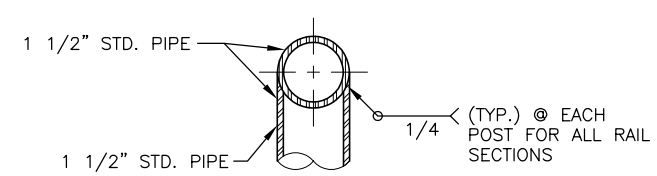

SECTION A
SCALE: 6"=1'–0"

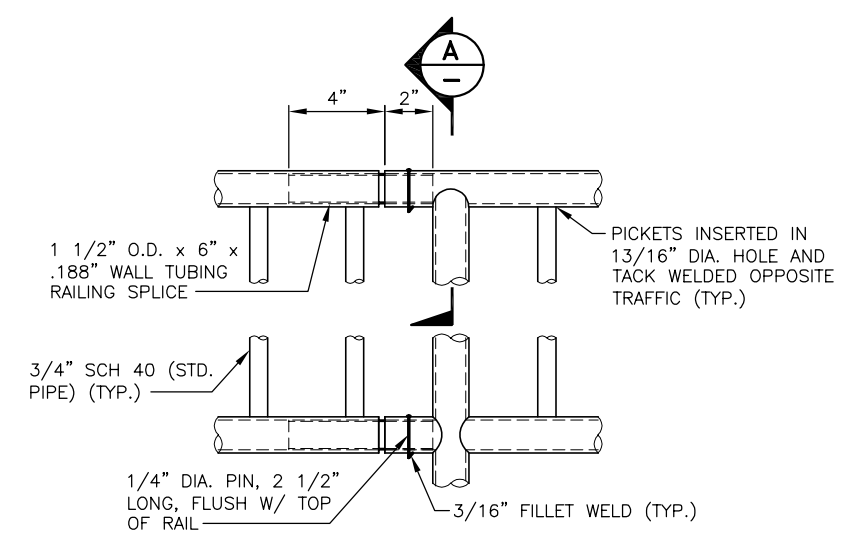

DETAIL 2
SCALE: 3" = 1'–0"

MONTGOMERY WATER GROUP, INC.
Kirkland, WA Gig Harbor, WA

THIS SHEET PREPARED JOINTLY BY CES INC. AND MONTGOMERY WATER GROUP, INC. HYDRAULIC DESIGN AND FACILITY LAYOUT PERFORMED BY MONTGOMERY WATER GROUP, INC. AND STRUCTURAL DESIGN PERFORMED BY CES INC.

JYR–JONG LEE STATE OF WASHINGTON 27833 REGISTERED PROFESSIONAL ENGINEER
EXPIRES 11–11–2007

CES Consulting Engineers
BRIDGES • ROADWAYS • STRUCTURES
1211 Fourth Avenue East
Olympia, Washington 98506

NO.	REVISION	BY	DATE
–	–	–	–

DESIGNED: JJL | CHECKED: EMG | KENT PROJECT NO. 5640 | SCALE: HORIZ: VERT:
DRAWN: OJK | PROJ MANGR: JJL | CONST. MGMT. REVIEW
APPROVED: CITY ENGINEER | DATE 1/16/06

BAR IS ONE INCH ON ORIGINAL DRAWING ADJUST SCALES ACCORDINGLY
0" 1"

KENT WASHINGTON
City of Kent
Public Works Department
Engineering Division

PEDESTRIAN HANDRAIL DETAILS

COW CREEK LAKE MERIDIAN OUTLET RESTORATION IMPROVEMENTS DESIGN

SHEET S8 OF S8
FILE NO. PEDESTRIAN

P:\Other Agencies\MWG-270 (Cow)\Structure\PEDESTRIAN HANDRAIL DETAILS.dwg, 1/16/2006 11:36:20 AM, ojking