REVISIONS				
SYMBOL	ZONE	DESCRIPTION	DATE	BY

U.S. ARMY CORPS
OF ENGINEERS
SEATTLE DISTRICT

WYNOOCHEE DAM

SECTION 1135 FISH RESTORATION PROJECT

GRAYS HARBOR COUNTY, WASHINGTON

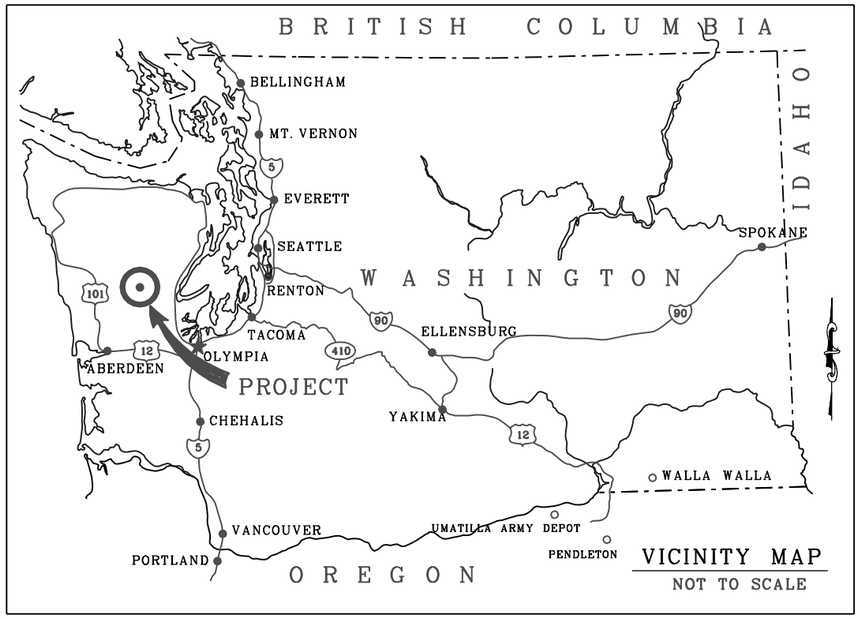

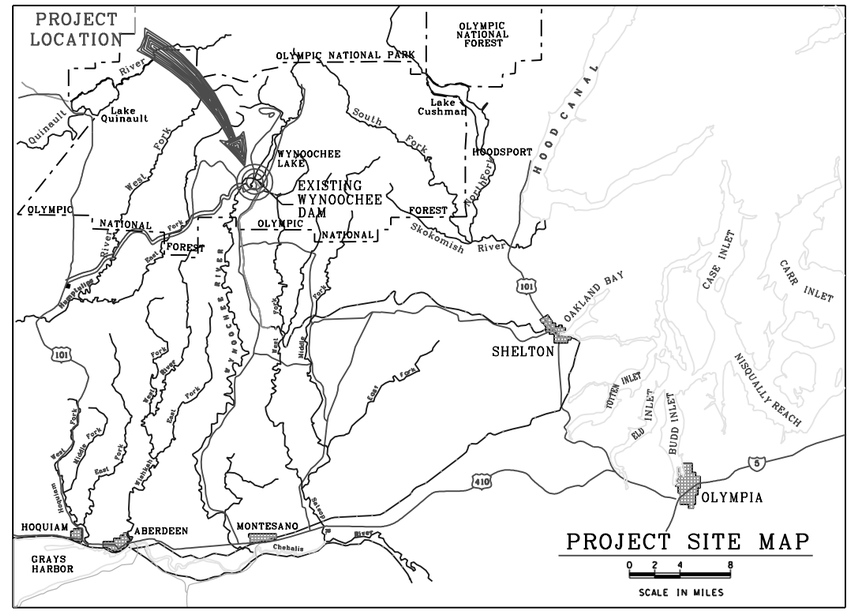

SHEET	PLATE	DESCRIPTION
1	G1	TITLE SHEET
2	G2	PROJECT FOOTPRINT
3	G3	PARTIAL SITE PLAN
4	C1	EICHER SCREEN WITH PENSTOCK BYPASS (ALTERNATIVE 1)
5	C2	EICHER SCREEN WITH PENSTOCK BYPASS (ALTERNATIVE 2)
6	C3	EICHER SCREEN WITH REPLACEABLE PENSTOCK SECTION (ALTERNATIVE 3)
7	C4	PRESSURIZED HDPE BYPASS PIPELINE
8	C5	MULTILEVEL DISCHARGE SYSTEM (ALTERNATIVE 1)
9	C6	MULITLEVEL DISCHARGE SYSTEM (ALTERNATIVE 2)
10	C7	PLAN AND PROFILE, GRAVITY FLUME
11	C8	PLAN AND PROFILE, GRAVITY FLUME
12	C9	PLAN AND PROFILE, GRAVITY FLUME
13	C10	PLAN AND PROFILE, GRAVITY FLUME
14	C11	OUTLET DISCHARGE SYSTEM (ALTERNATIVE 2)
15	M1	DETAILS-EICHER SCREEN WITH PENSTOCK BYPASS (ALTERNATIVE 1)
16	M2	DETAILS-EICHER SCREEN WITH PENSTOCK BYPASS (ALTERNATIVE 2)
17	M3	DETAILS-EICHER SCREEN WITH REPLACEABLE PENSTOCK (ALTERNATIVE 3)
18	M4	DETAILS-MULTILEVEL DISCHARGE SYSTEM (ALTERNATIVE 1)
19	M5	DETAILS-MULTILEVEL DISCHARGE SYSTEM (ALTERNATIVE 2)
20	M6	EICHER SCREEN DETAILS
21	M7	FLUME SECTION DETAILS

SHEET INDEX

THIS PROJECT WAS DESIGNED BY:
TETRA TECH INC. ISG
FOR THE U.S. ARMY CORPS OF ENGINEERS
SEATTLE DISTRICT

TETRA TECH INC.
1925 POST ALLEY, STE. 4
SEATTLE, WA 98101
(206) 728-9655

COMPUTER AIDED DESIGN & DRAFTING

SAFETY PAYS

VALUE ENGINEERING PAYS

10% DESIGN

TETRA TECH INC. ISG
SEATTLE, WASHINGTON

U.S. ARMY ENGINEER DISTRICT, SEATTLE
CORPS OF ENGINEERS
SEATTLE, WASHINGTON

WYNOOCHEE DAM
SECTION 1135, FISH RESTORATION PROJECT

TITLE SHEET

SIZE	INVITATION NO.	FILE NO.	DATE:	PLATE
D	DACA67-02-D-2009		JAN. 2003	G1
DSGN. IP		CHK. JS	SHEET 1	

REVISIONS				
SYMBOL	ZONE	DESCRIPTION	DATE	BY

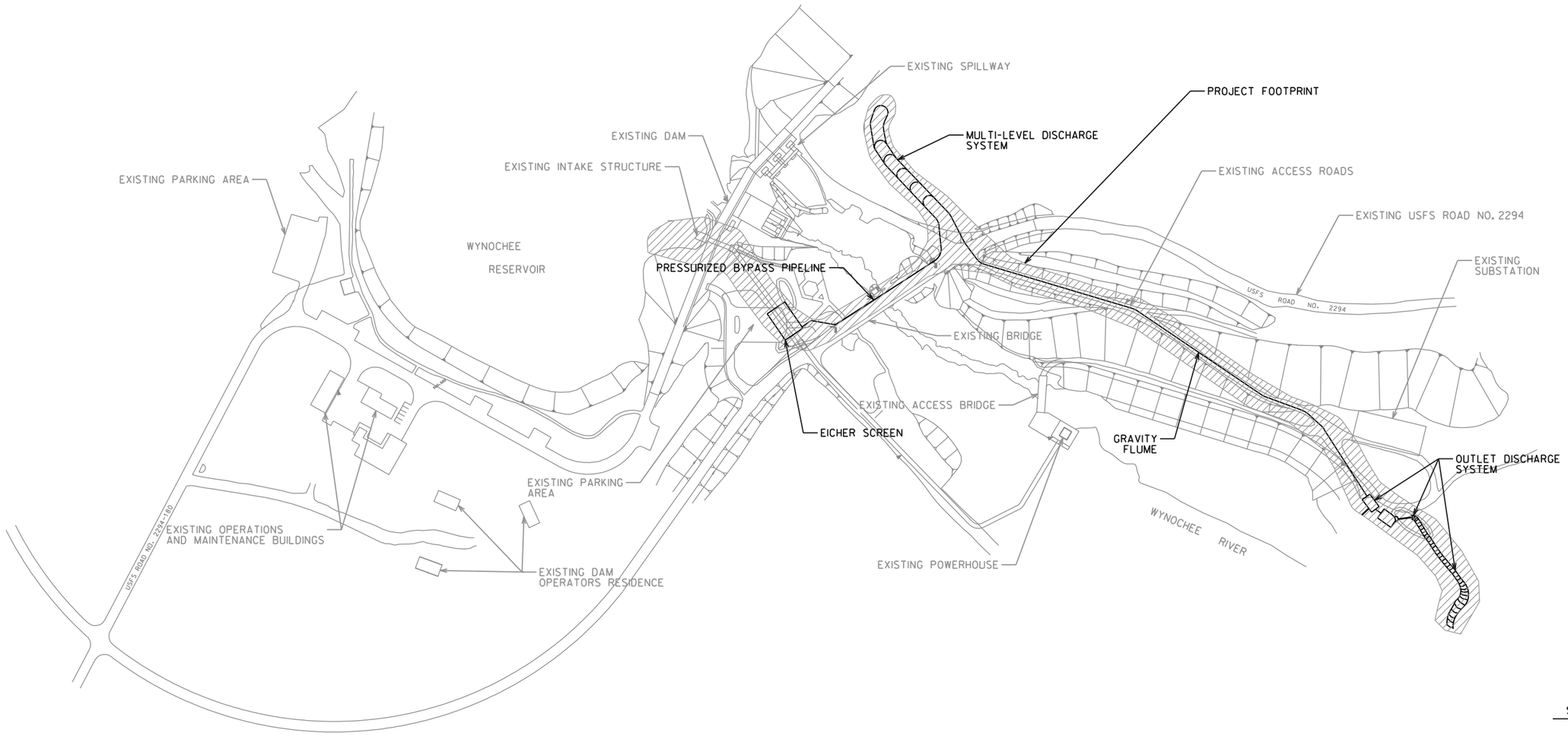

SCALE:
N.T.S.

10% DESIGN

TETRA TECH INC. ISG
SEATTLE, WASHINGTON

U.S. ARMY ENGINEER DISTRICT, SEATTLE
CORPS OF ENGINEERS
SEATTLE, WASHINGTON

WYNOOCHEE DAM
SECTION 1135, FISH RESTORATION PROJECT

PROJECT FOOTPRINT

SIZE	INVITATION NO.	FILE NO.	DATE:	PLATE
D	DACA67-02-D-2009		JAN. 2003	G2
DSGN. IP		CHK. JS	SHEET 2	

REVISIONS				
SYMBOL	ZONE	DESCRIPTION	DATE	BY

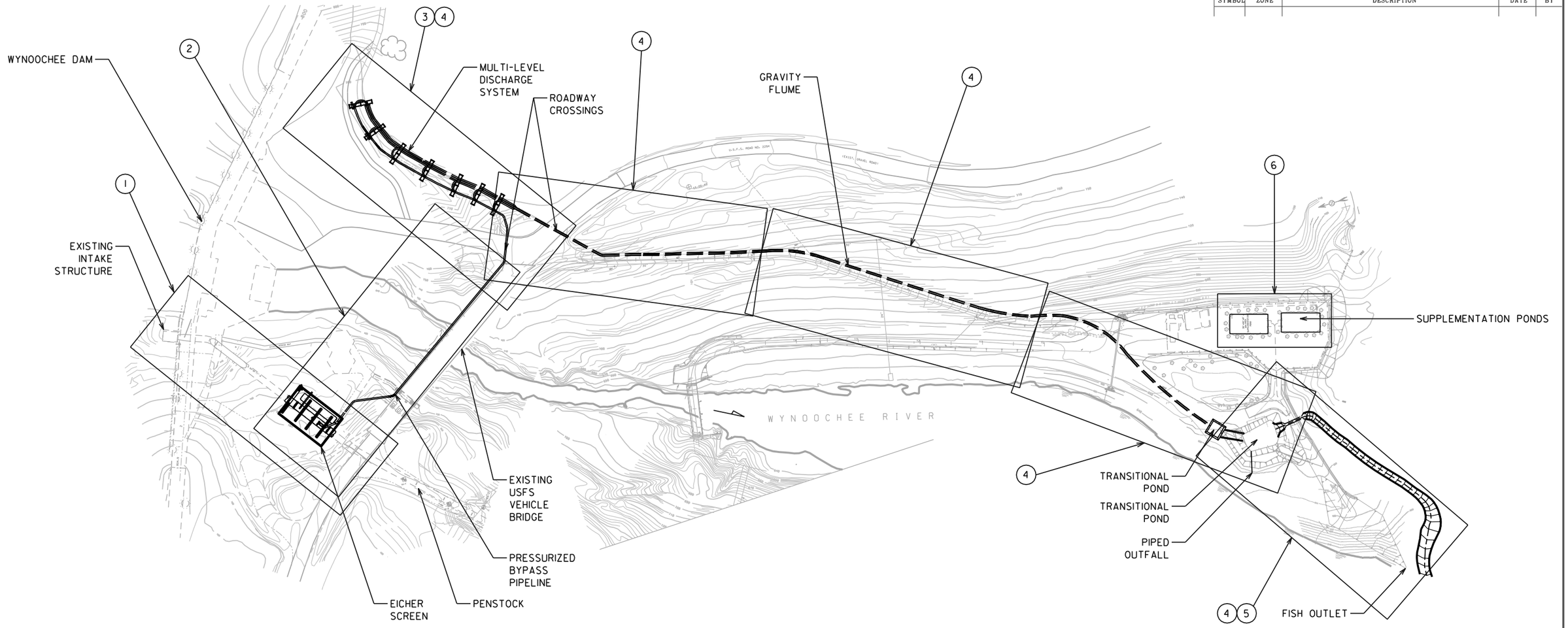

1. EICHER SCREEN WITH PENSTOCK BYPASS (ALTERNATIVE 1) (SEE SHEET 4)

   EICHER SCREEN WITH PENSTOCK BYPASS (ALTERNATIVE 2) (SEE SHEET 5)

   EICHER SCREEN WITH REPLACEABLE PENSTOCK SECTION (ALTERNATIVE 3) (SEE SHEET 6)

2. PRESSURIZED HDPE BYPASS PIPELINE (SEE SHEET 7)

3. MULTILEVEL DISCHARGE SYSTEM (ALTERNATIVE 1) (SEE SHEET 8)

   MULTILEVEL DISCHARGE SYSTEM (ALTERNATIVE 2) (SEE SHEET 9)

4. GRAVITY FLUME. (SEE SHEETS 10 THRU 13)

5. OUTLET DISCHARGE SYSTEM FACILITIES (SEE SHEET 14)

6. SUPPLEMENTATION PONDS

SCALE:
N.T.S.

10% DESIGN

TETRA TECH INC. ISG
SEATTLE, WASHINGTON

U.S. ARMY ENGINEER DISTRICT, SEATTLE
CORPS OF ENGINEERS
SEATTLE, WASHINGTON

WYNOOCHEE DAM
SECTION 1135, FISH RESTORATION PROJECT

PARTIAL SITE PLAN

SIZE	INVITATION NO.	FILE NO.	DATE:	PLATE
D	DACA67-02-D-2009		JAN. 2003	G3
DSGN. IP		CHK. JS	SHEET 3	

REVISIONS				
SYMBOL	ZONE	DESCRIPTION	DATE	BY

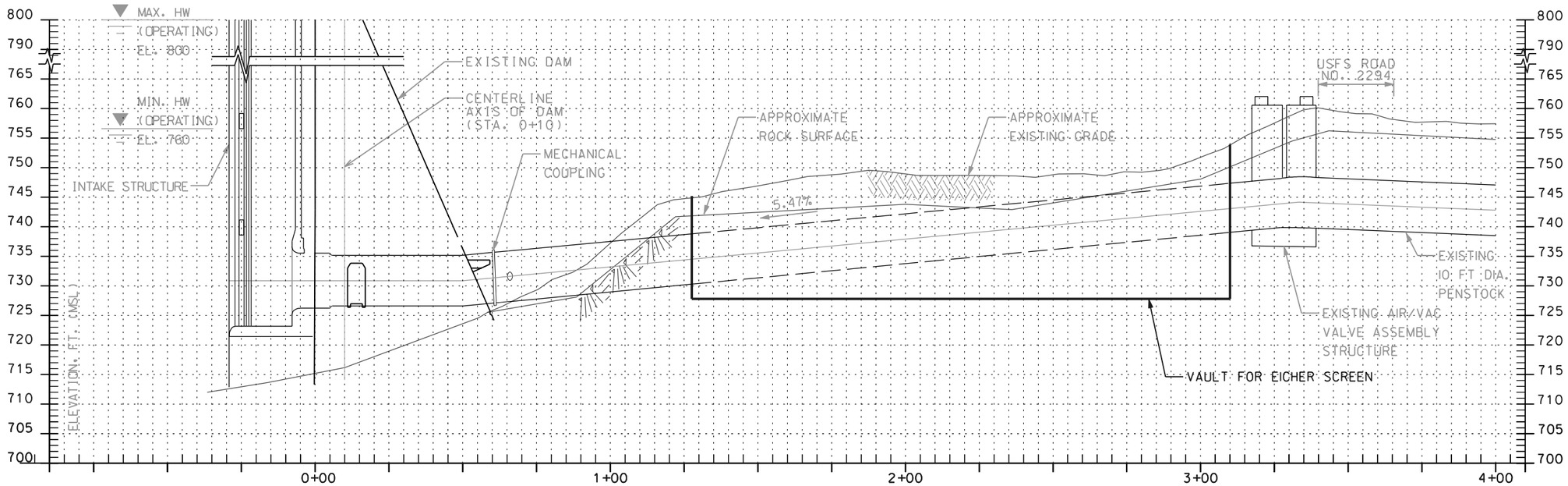

PROFILE

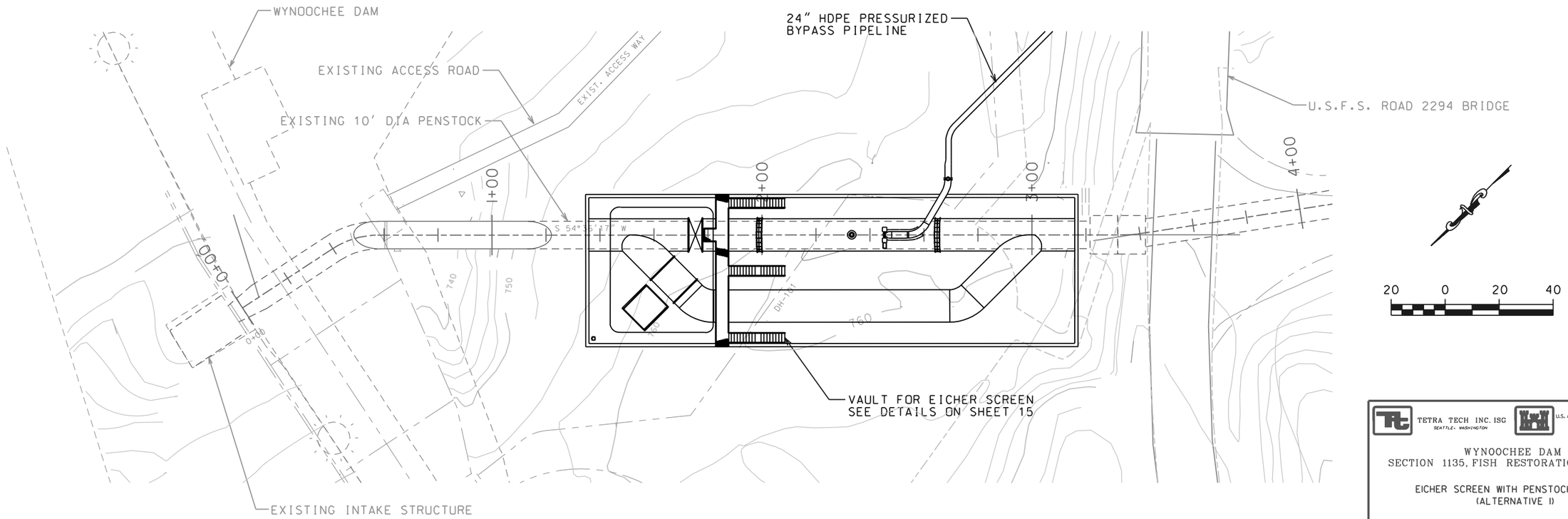

PLAN

10% DESIGN

TETRA TECH INC. ISG
SEATTLE, WASHINGTON

U.S. ARMY ENGINEER DISTRICT, SEATTLE
CORPS OF ENGINEERS
SEATTLE, WASHINGTON

WYNOOCHEE DAM
SECTION 1135, FISH RESTORATION PROJECT

EICHER SCREEN WITH PENSTOCK BYPASS
(ALTERNATIVE I)

SIZE	INVITATION NO.	FILE NO.	DATE:	PLATE
D	DACA67-02-D-2009		JAN. 2003	CI
DSGN. IP		CHK. JS	SHEET 4	

REVISIONS				
SYMBOL	ZONE	DESCRIPTION	DATE	BY

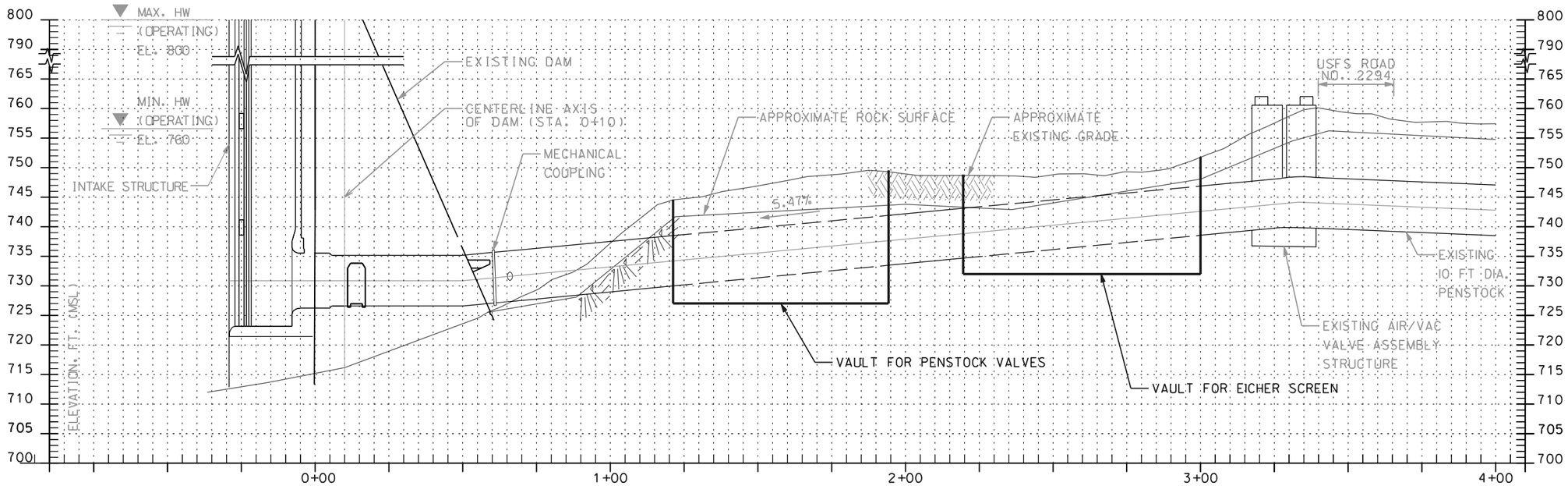

PROFILE

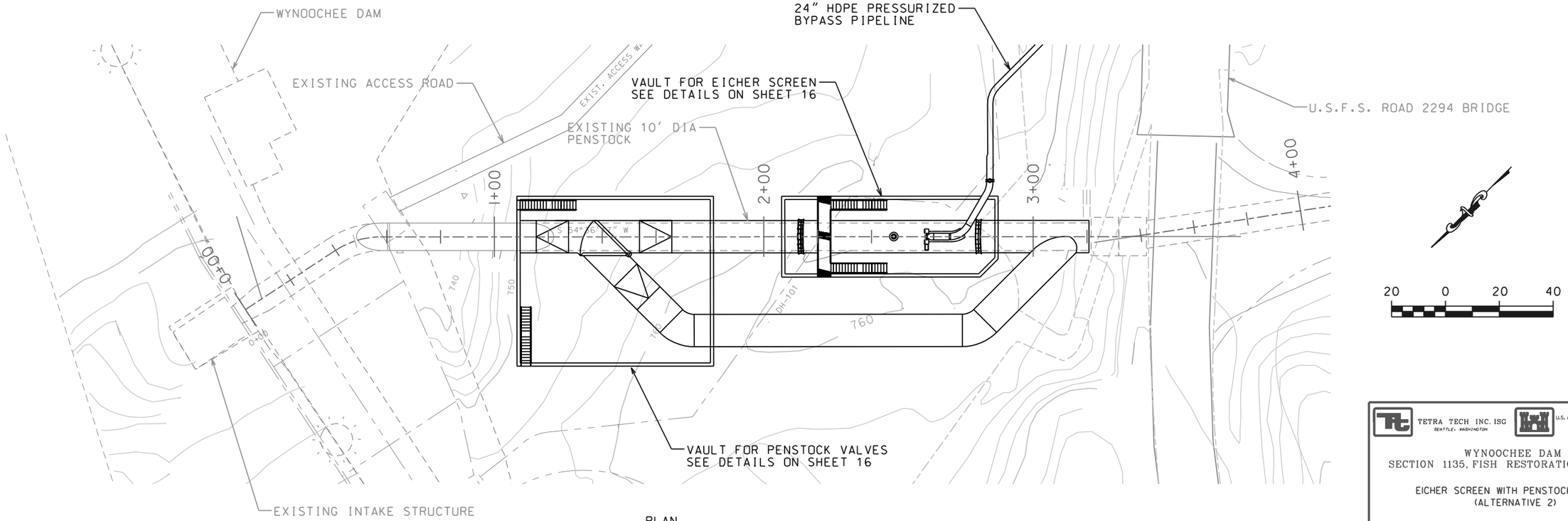

PLAN

10% DESIGN

TETRA TECH INC. ISG
SEATTLE, WASHINGTON

U.S. ARMY ENGINEER DISTRICT, SEATTLE
CORPS OF ENGINEERS
SEATTLE, WASHINGTON

WYNOOCHEE DAM
SECTION 1135, FISH RESTORATION PROJECT

EICHER SCREEN WITH PENSTOCK BYPASS
(ALTERNATIVE 2)

SIZE	INVITATION NO.	FILE NO.	DATE:	PLATE
D	DACA67-02-D-2009		JAN. 2003	C2
DSGN. IP		CHK. JS	SHEET 5	

REVISIONS				
SYMBOL	ZONE	DESCRIPTION	DATE	BY

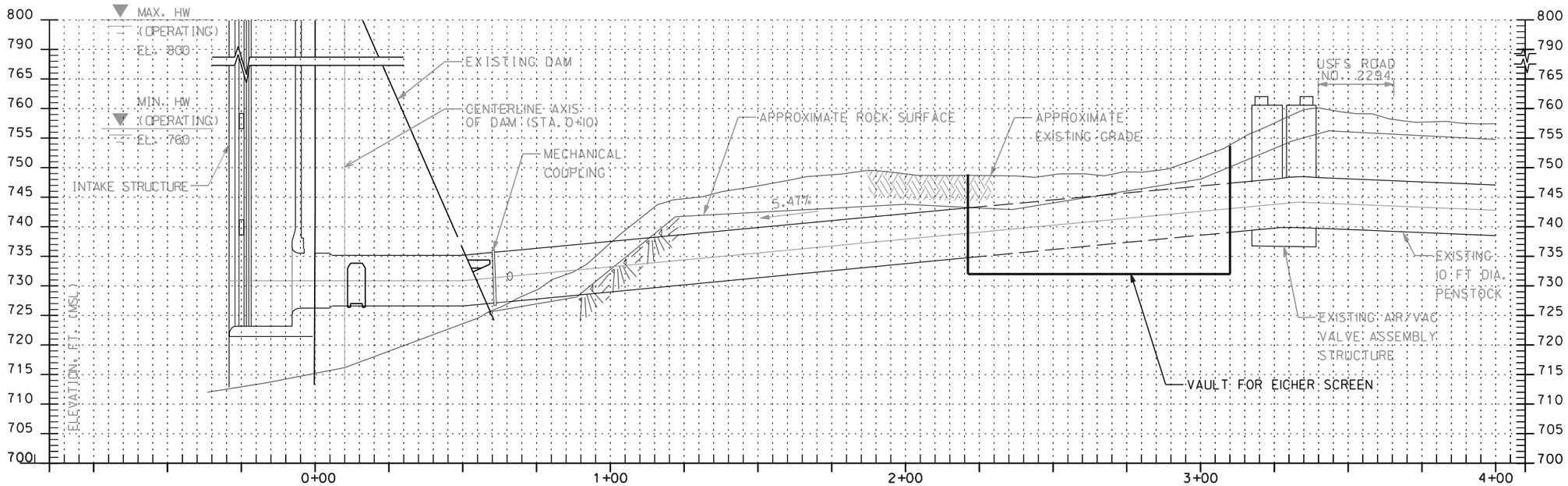

PROFILE

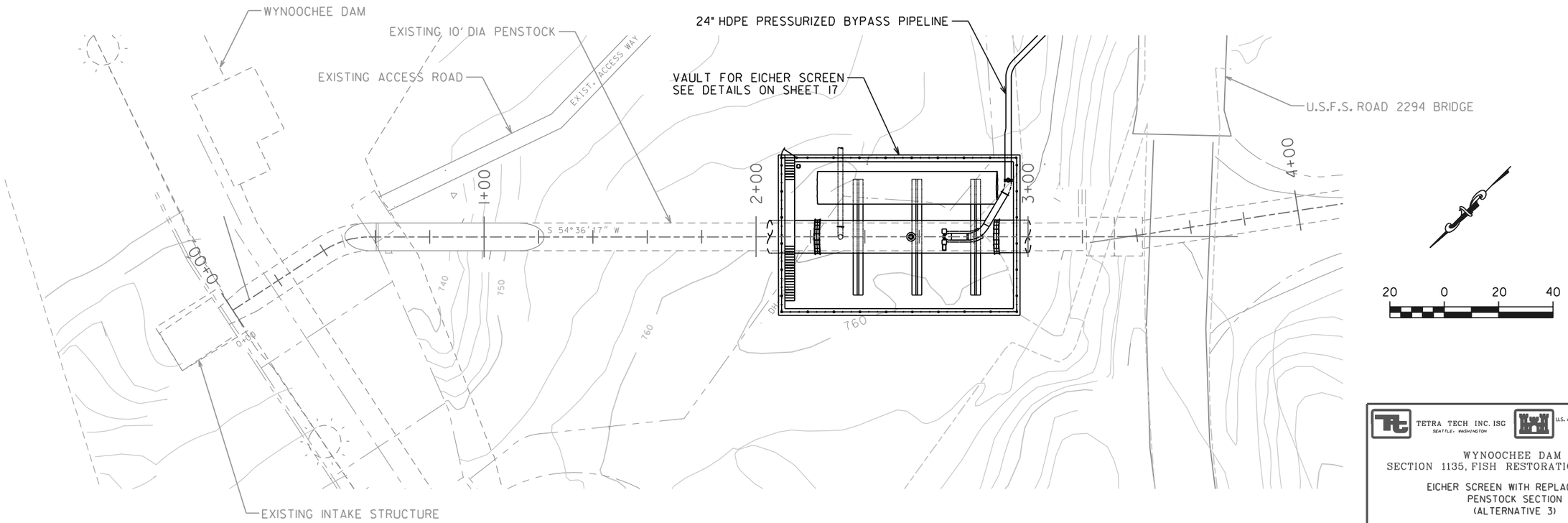

PLAN

10% DESIGN

TETRA TECH INC. ISG
SEATTLE, WASHINGTON

U.S. ARMY ENGINEER DISTRICT, SEATTLE
CORPS OF ENGINEERS
SEATTLE, WASHINGTON

WYNOOCHEE DAM
SECTION 1135, FISH RESTORATION PROJECT

EICHER SCREEN WITH REPLACEABLE
PENSTOCK SECTION
(ALTERNATIVE 3)

SIZE	INVITATION NO.	FILE NO.	DATE:	PLATE
D	DACA67-02-D-2009		JAN. 2003	C3
DSGN. IP		CHK. JS	SHEET 6	

REVISIONS				
SYMBOL	ZONE	DESCRIPTION	DATE	BY

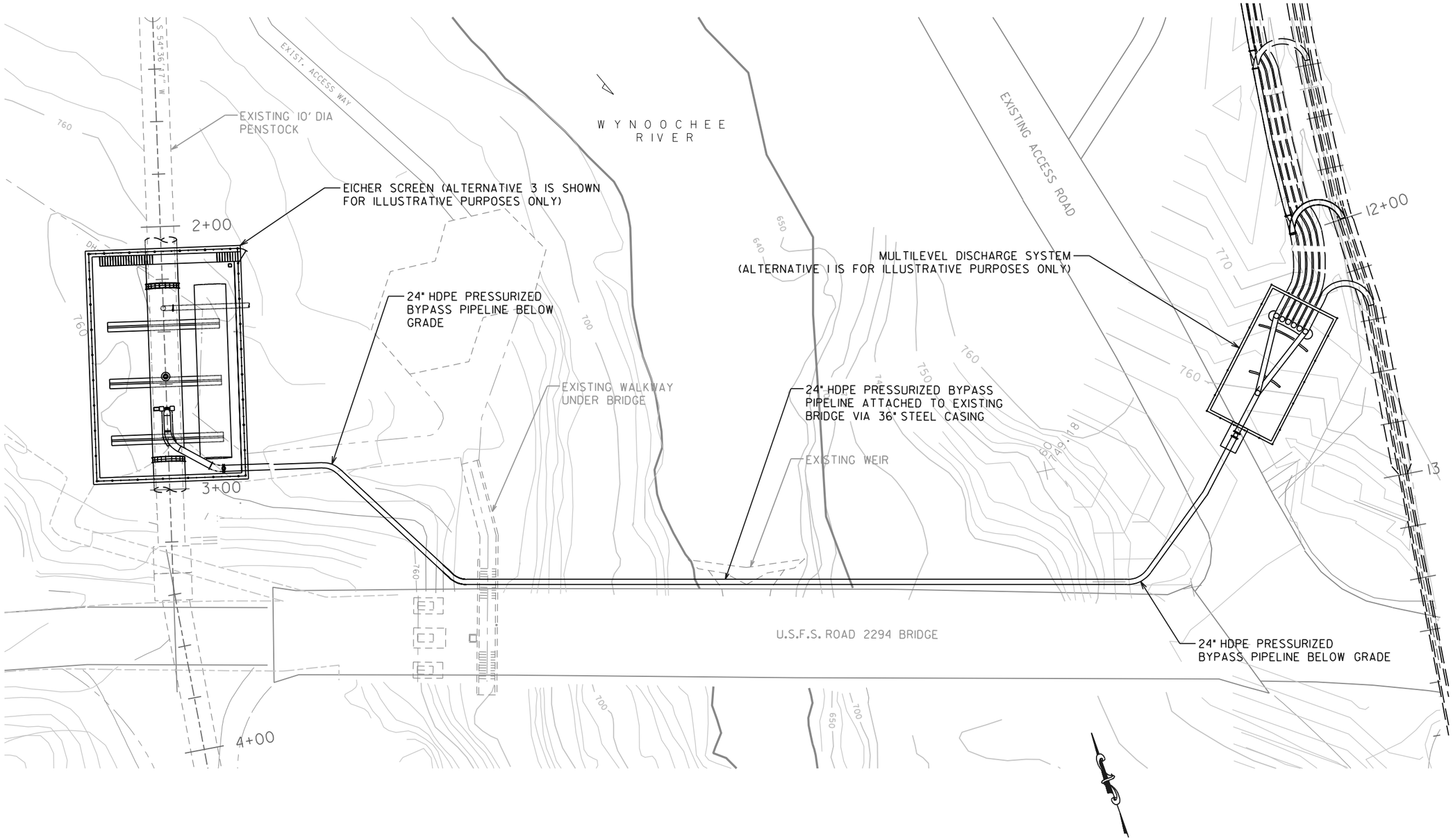

20 0 20 40

PLAN

10% DESIGN

TETRA TECH INC. ISG
SEATTLE, WASHINGTON

U.S. ARMY ENGINEER DISTRICT, SEATTLE
CORPS OF ENGINEERS
SEATTLE, WASHINGTON

WYNOOCHEE DAM
SECTION 1135, FISH RESTORATION PROJECT

PRESSURIZED HDPE BYPASS PIPELINE

SIZE	INVITATION NO.	FILE NO.	DATE:	PLATE
D	DACA67-02-D-2009		JAN. 2003	C4
DSGN. IP		CHK. JS	SHEET 7	

REVISIONS				
SYMBOL	ZONE	DESCRIPTION	DATE	BY

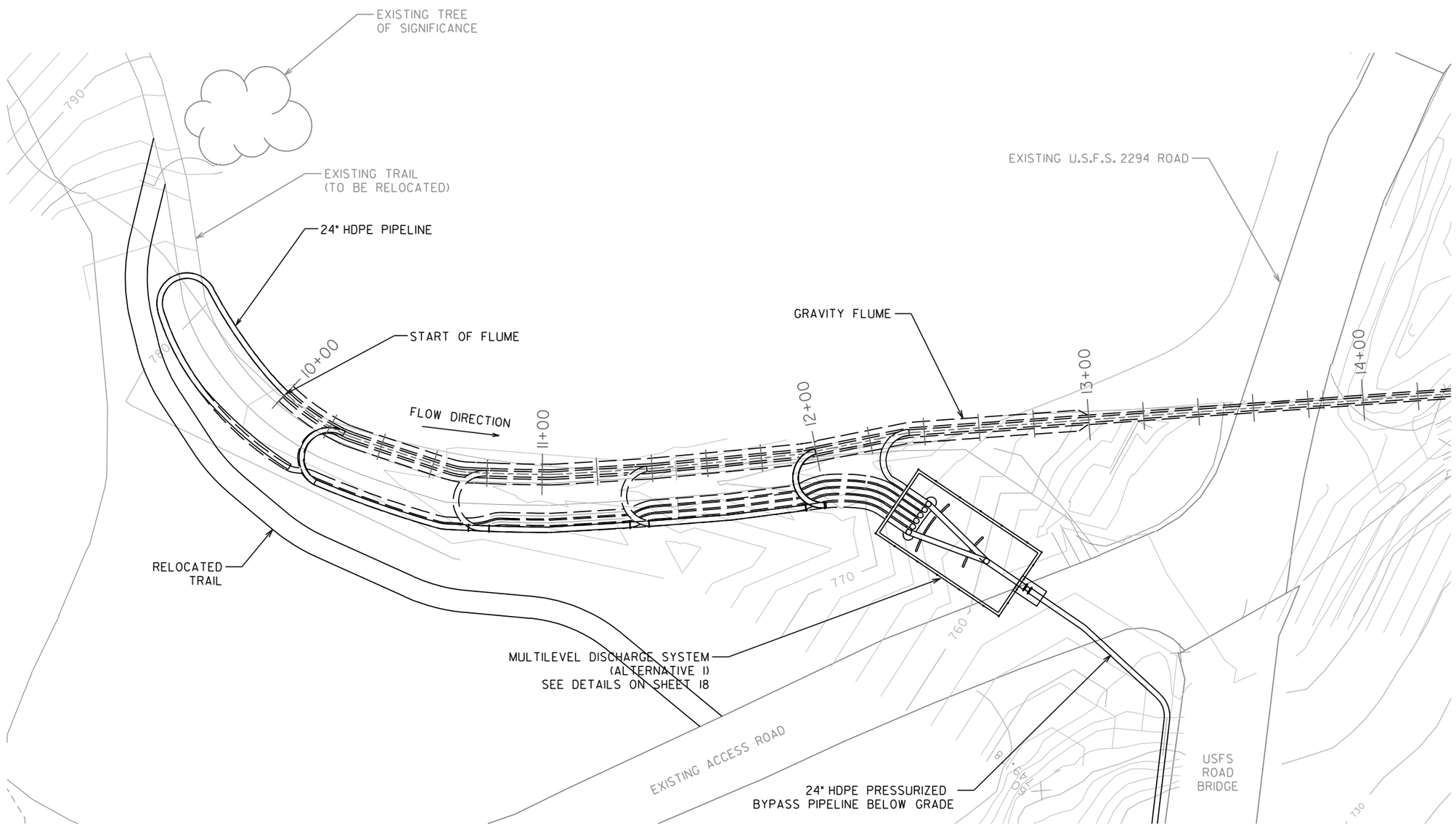

20 0 20 40

PLAN

10% DESIGN

TETRA TECH INC. ISG
SEATTLE, WASHINGTON

U.S. ARMY ENGINEER DISTRICT, SEATTLE
CORPS OF ENGINEERS
SEATTLE, WASHINGTON

WYNOOCHEE DAM
SECTION 1135, FISH RESTORATION PROJECT

MULTILEVEL DISCHARGE SYSTEM
(ALTERNATIVE I)

SIZE	INVITATION NO.	FILE NO.	DATE:	PLATE
D	DACA67-02-D-2009		JAN. 2003	C5
DSGN. IP		CHK. JS	SHEET 8	

REVISIONS				
SYMBOL	ZONE	DESCRIPTION	DATE	BY

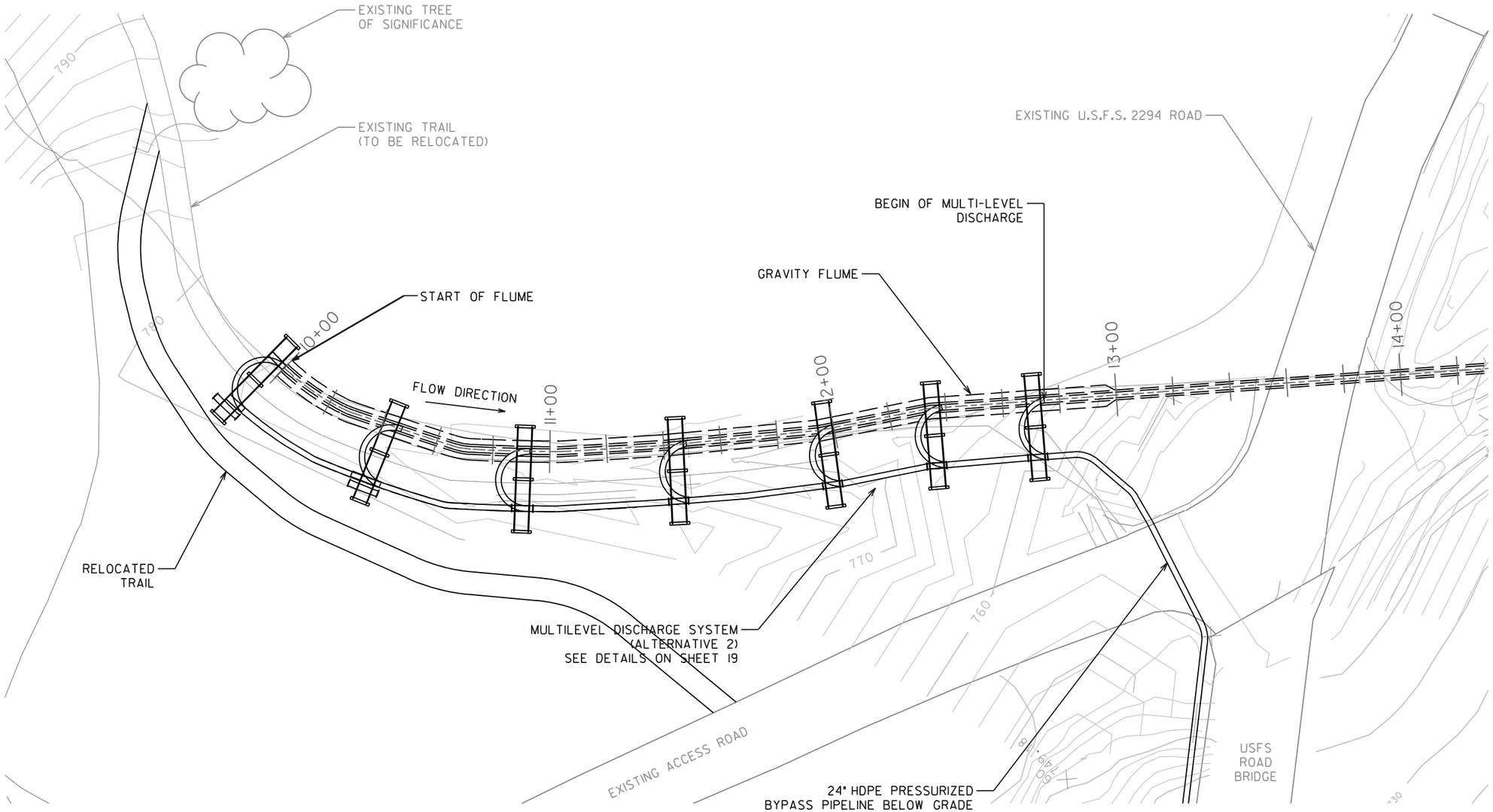

PLAN

10% DESIGN

TETRA TECH INC. ISG
SEATTLE, WASHINGTON

U.S. ARMY ENGINEER DISTRICT, SEATTLE
CORPS OF ENGINEERS
SEATTLE, WASHINGTON

WYNOOCHEE DAM
SECTION 1135, FISH RESTORATION PROJECT

MULTILEVEL DISCHARGE SYSTEM
(ALTERNATIVE 2)

SIZE	INVITATION NO.	FILE NO.	DATE	PLATE
D	DACA67-02-D-2009		JAN. 2003	C6
DSGN. IP		CHK. JS	SHEET 9	

REVISIONS				
SYMBOL	ZONE	DESCRIPTION	DATE	BY

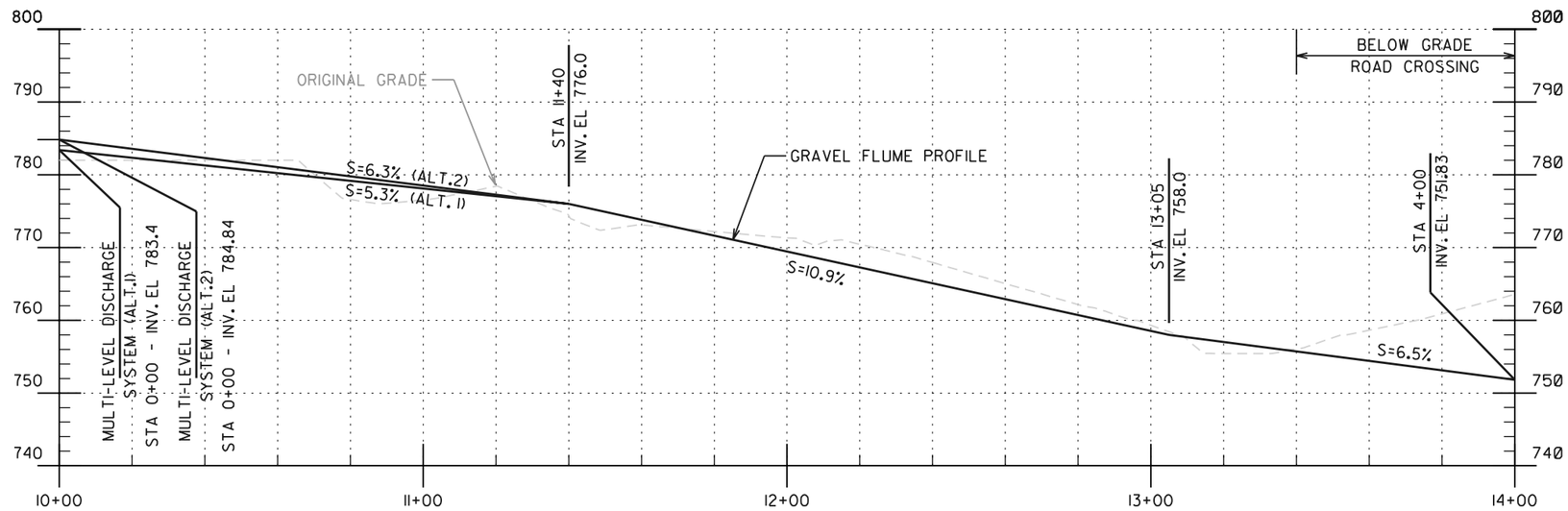

PROFILE

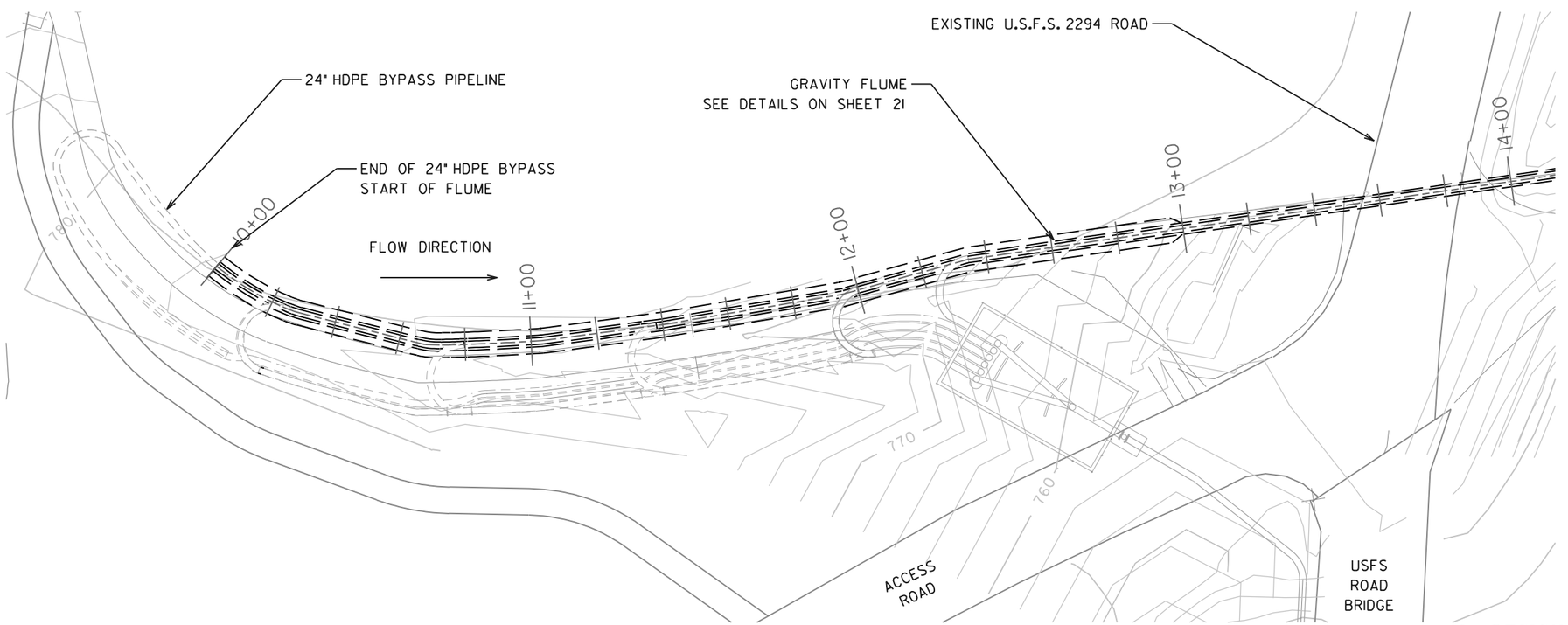

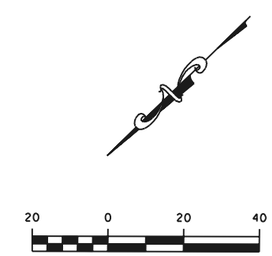

PLAN

TETRA TECH INC. ISG
SEATTLE, WASHINGTON

U.S. ARMY ENGINEER DISTRICT, SEATTLE
CORPS OF ENGINEERS
SEATTLE, WASHINGTON

WYNOOCHEE DAM
SECTION 1135, FISH RESTORATION PROJECT

PLAN AND PROFILE, GRAVITY FLUME

SIZE	INVITATION NO.	FILE NO.	DATE:	PLATE
D	DACA67-02-D-2009		JAN. 2003	C7
DSGN. IP		CHK. JS	SHEET 10	

REVISIONS				
SYMBOL	ZONE	DESCRIPTION	DATE	BY

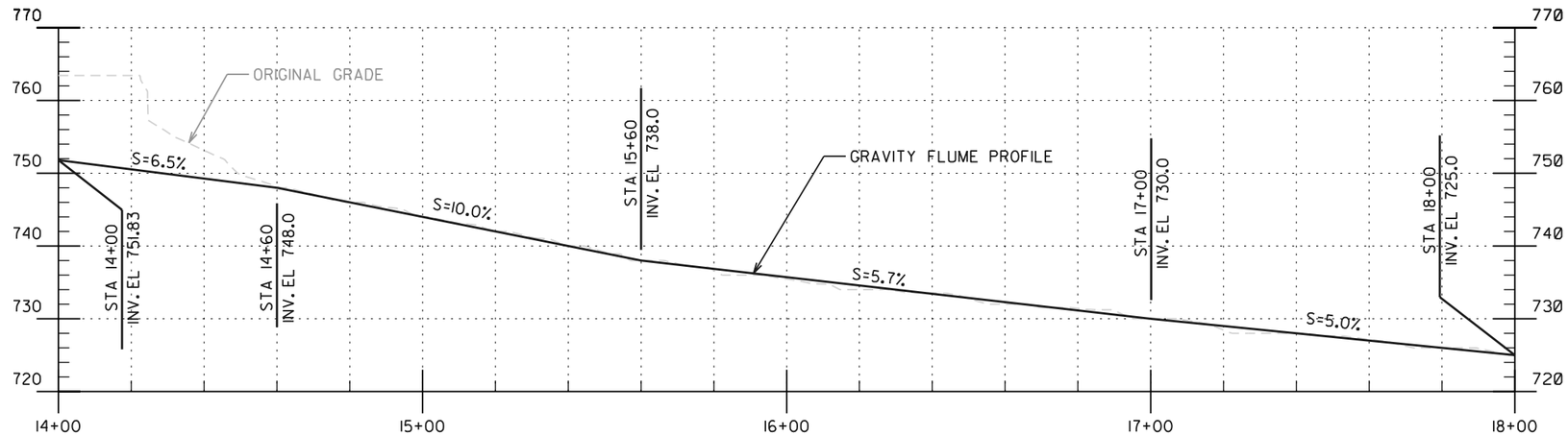

PROFILE

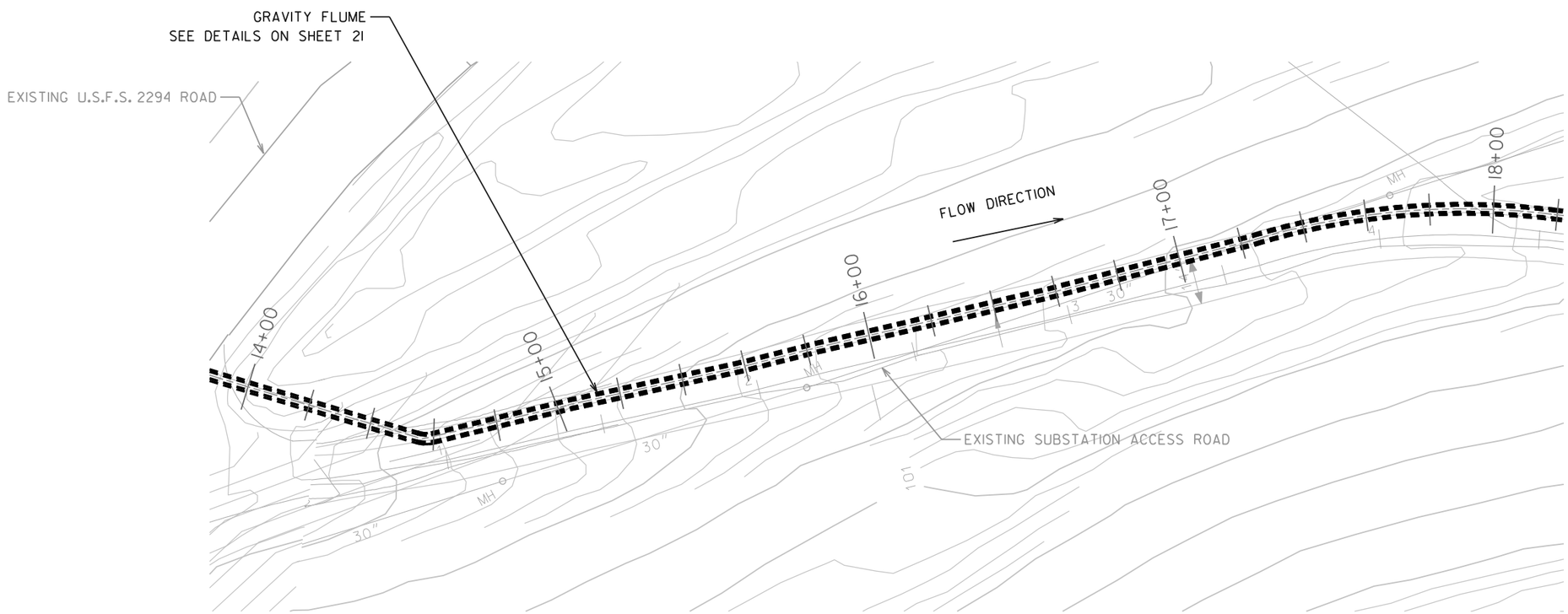

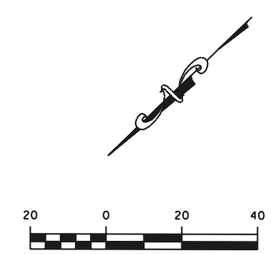

PLAN

10% DESIGN

TETRA TECH INC. ISG
SEATTLE, WASHINGTON

U.S. ARMY ENGINEER DISTRICT, SEATTLE
CORPS OF ENGINEERS
SEATTLE, WASHINGTON

WYNOOCHEE DAM
SECTION 1135, FISH RESTORATION PROJECT

PLAN AND PROFILE, GRAVITY FLUME

SIZE	INVITATION NO.	FILE NO.	DATE:	PLATE
D	DACA67-02-D-2009		JAN. 2003	C8
DSGN. IP		CHK. JS	SHEET II	

REVISIONS				
SYMBOL	ZONE	DESCRIPTION	DATE	BY

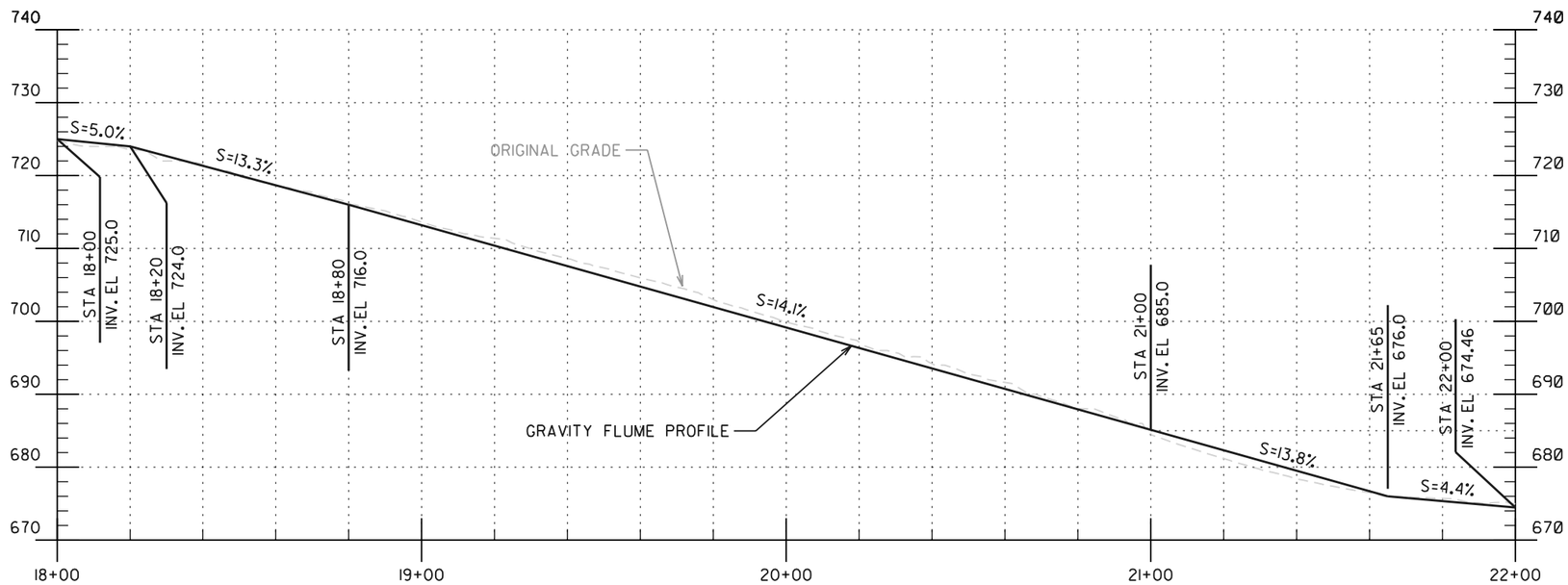

PROFILE

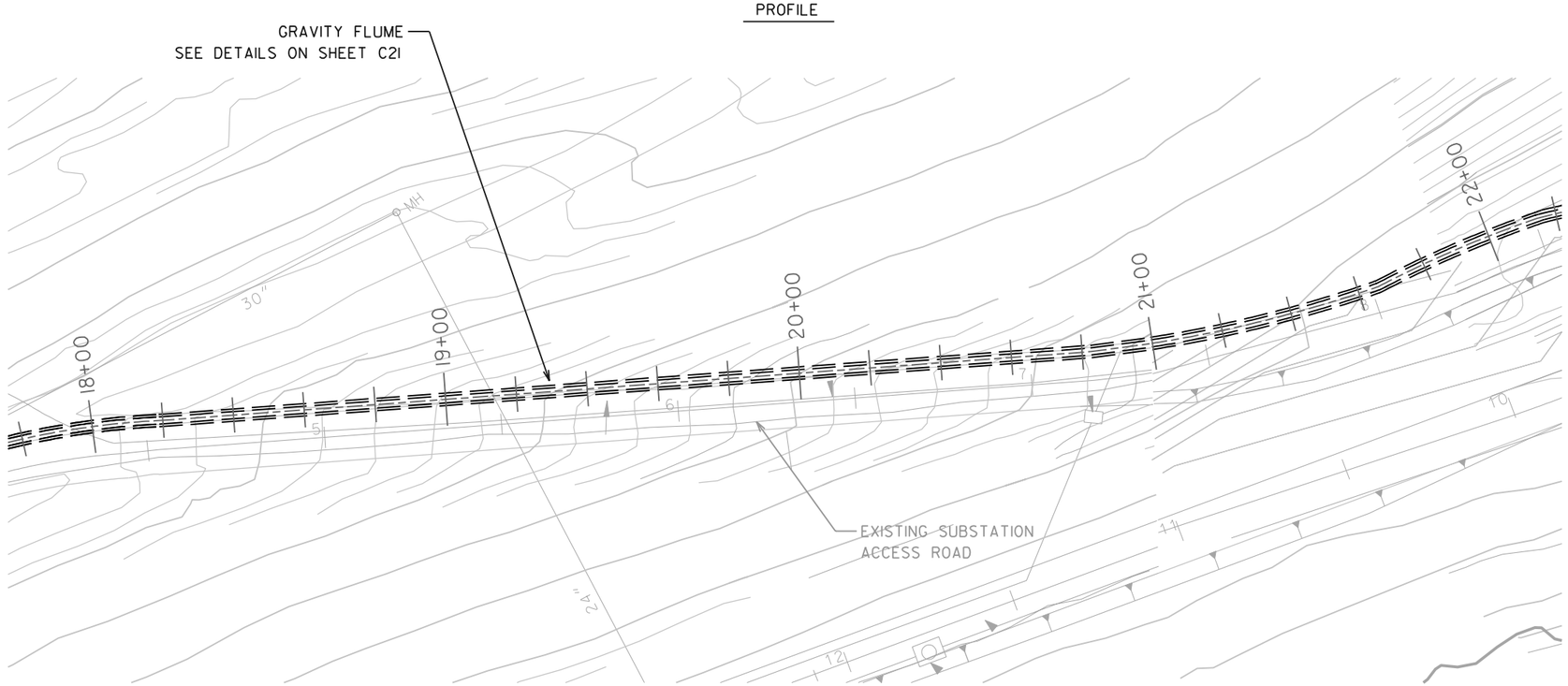

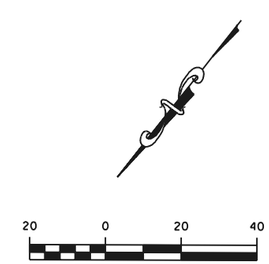

PLAN

TETRA TECH INC. ISG
SEATTLE, WASHINGTON

U.S. ARMY ENGINEER DISTRICT, SEATTLE
CORPS OF ENGINEERS
SEATTLE, WASHINGTON

WYNOOCHEE DAM
SECTION 1135, FISH RESTORATION PROJECT

PLAN AND PROFILE, GRAVITY FLUME

SIZE	INVITATION NO.	FILE NO.	DATE:	PLATE
D	DACA67-02-D-2009		JAN. 2003	C9
DSGN. IP		CHK. JS	SHEET 12	

10% DESIGN

REVISIONS				
SYMBOL	ZONE	DESCRIPTION	DATE	BY

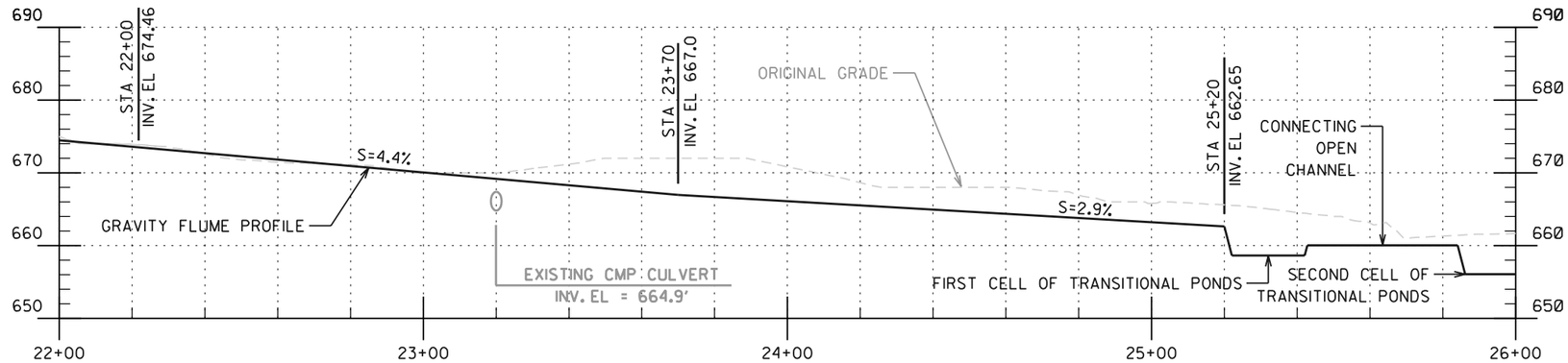

PROFILE

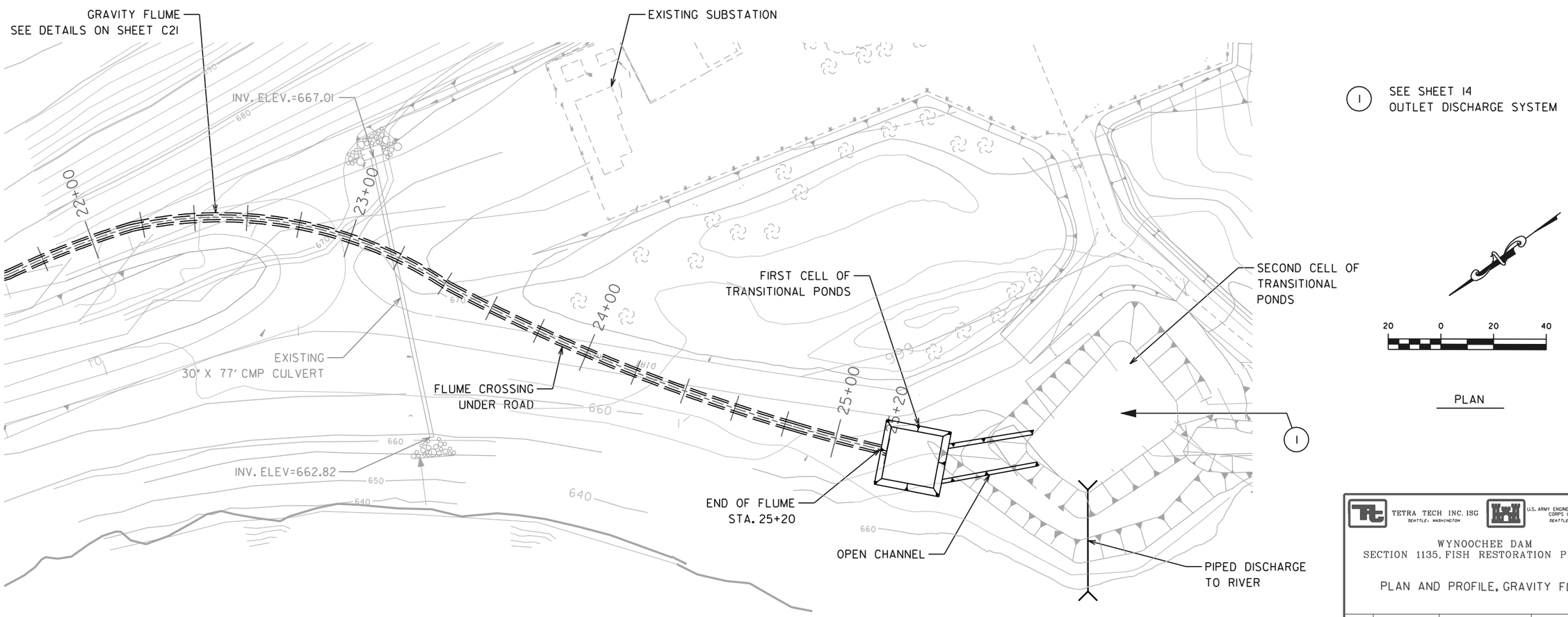

PLAN

10% DESIGN

TETRA TECH INC. ISG
SEATTLE, WASHINGTON

U.S. ARMY ENGINEER DISTRICT, SEATTLE
CORPS OF ENGINEERS
SEATTLE, WASHINGTON

WYNOOCHEE DAM
SECTION 1135, FISH RESTORATION PROJECT

PLAN AND PROFILE, GRAVITY FLUME

SIZE	INVITATION NO.	FILE NO.	DATE:	PLATE
D	DACA67-02-D-2009		JAN. 2003	C10
DSGN. IP		CHK. JS	SHEET 13	

REVISIONS				
SYMBOL	ZONE	DESCRIPTION	DATE	BY

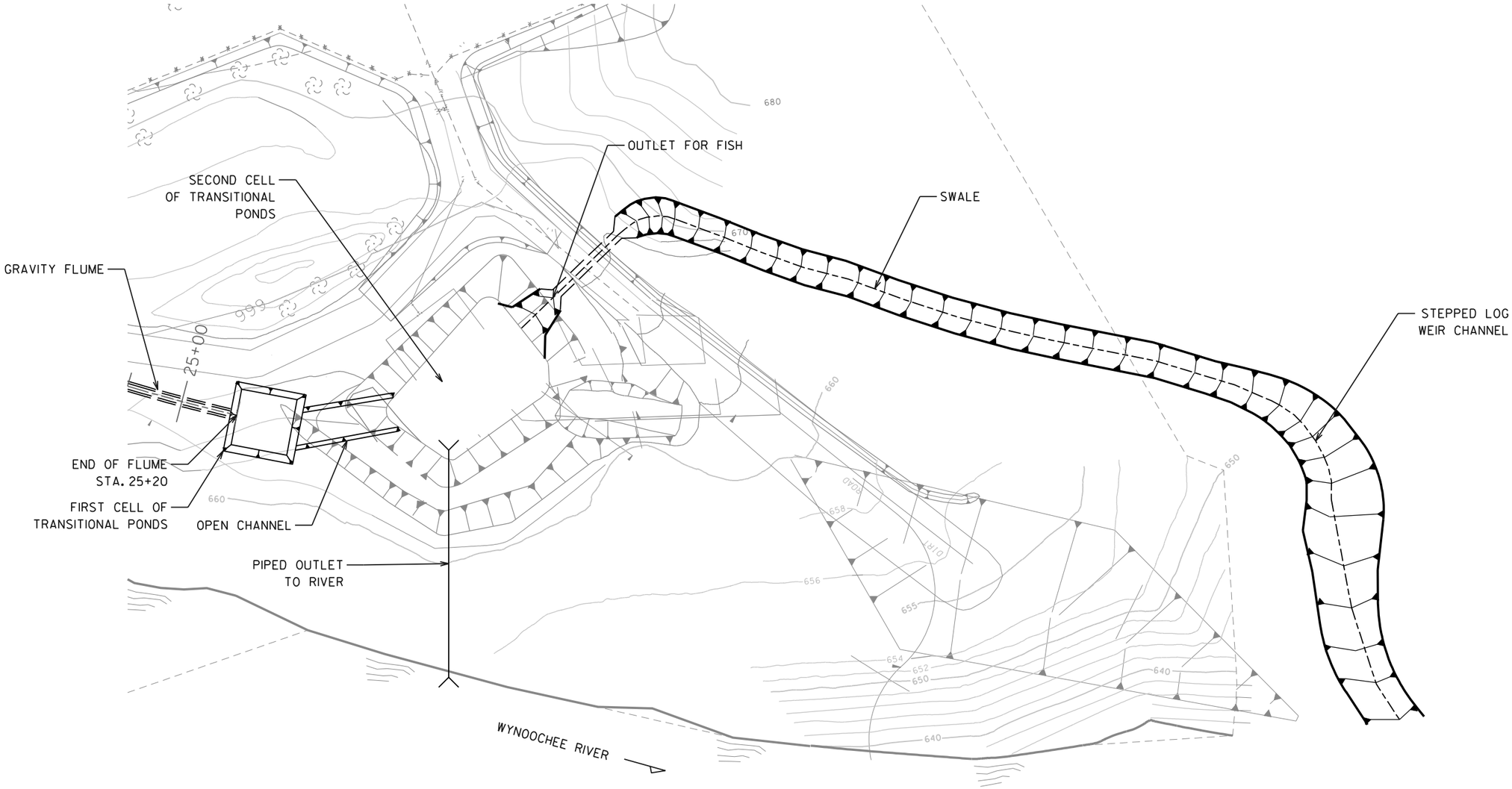

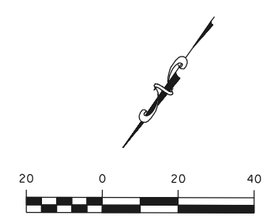

PLAN

10% DESIGN

TETRA TECH INC. ISG
SEATTLE, WASHINGTON

U.S. ARMY ENGINEER DISTRICT, SEATTLE
CORPS OF ENGINEERS
SEATTLE, WASHINGTON

WYNOOCHEE DAM
SECTION 1135, FISH RESTORATION PROJECT

OUTLET DISCHARGE SYSTEM
(ALTERNATIVE 2)

SIZE	INVITATION NO.	FILE NO.	DATE:	PLATE
D	DACA67-02-D-2009		JAN. 2003	CII
DSGN. IP		CHK. JS	SHEET 14	

REVISIONS				
SYMBOL	ZONE	DESCRIPTION	DATE	BY

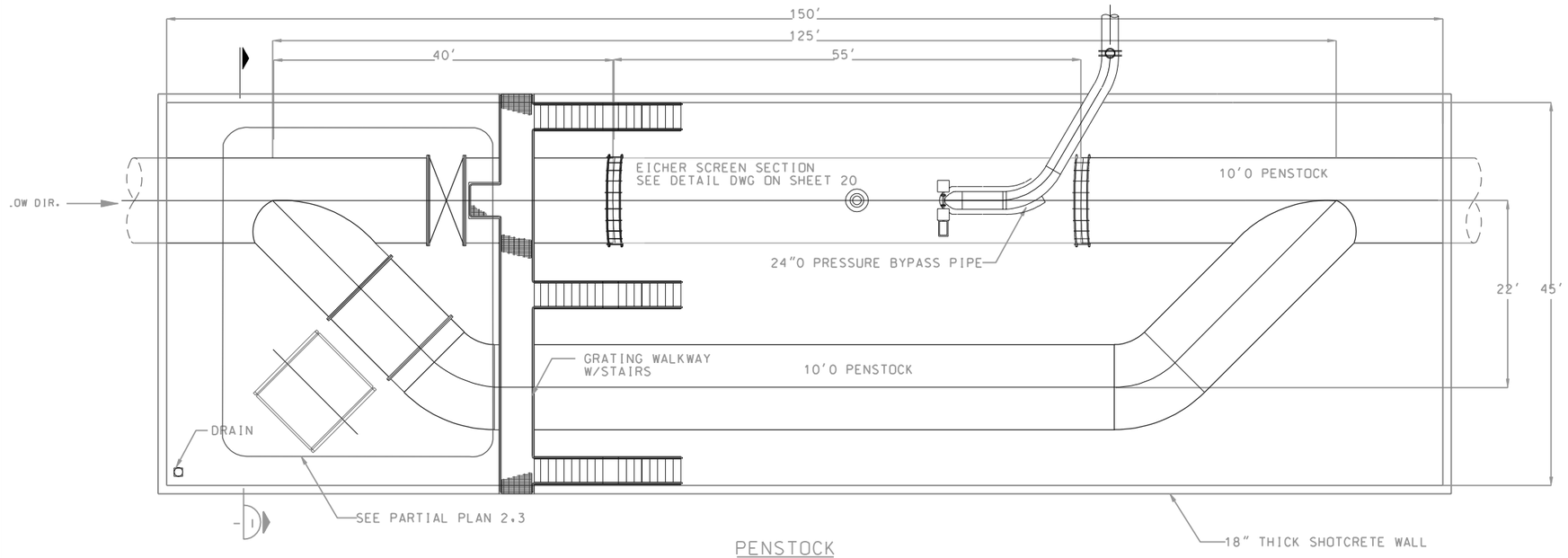

PENSTOCK

PLAN (A)

SCALE: 1/8" = 1'-0"

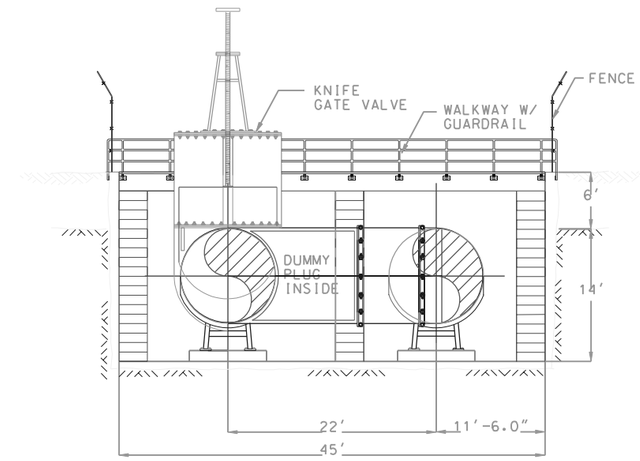

SECTION (1)

SCALE: 1/8" = 1'-0"

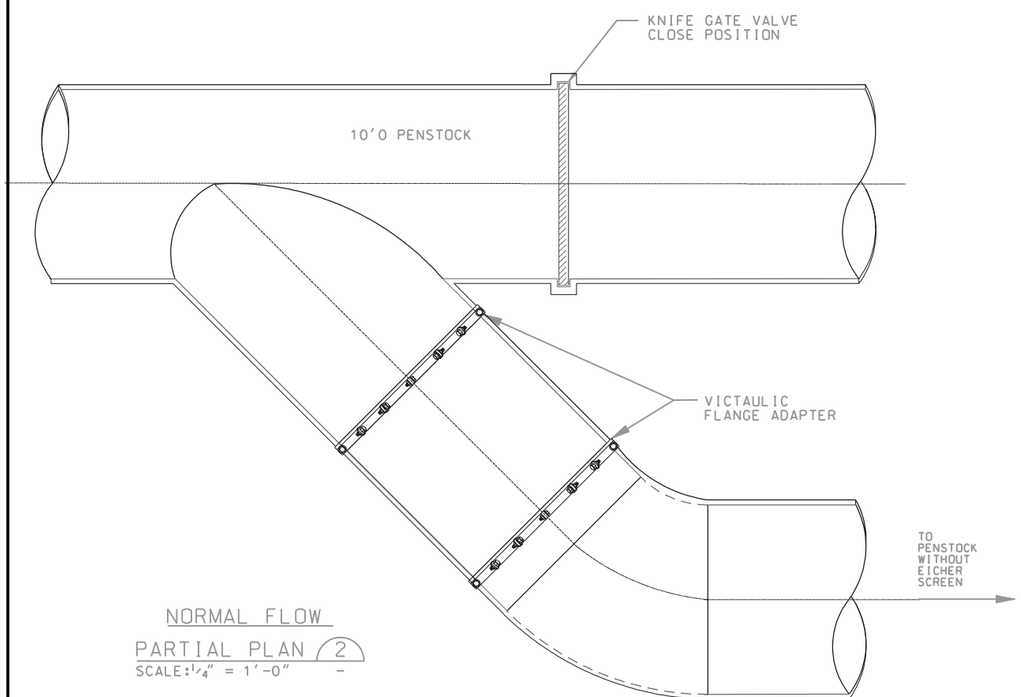

NORMAL FLOW

PARTIAL PLAN (2)

SCALE: 1/4" = 1'-0"

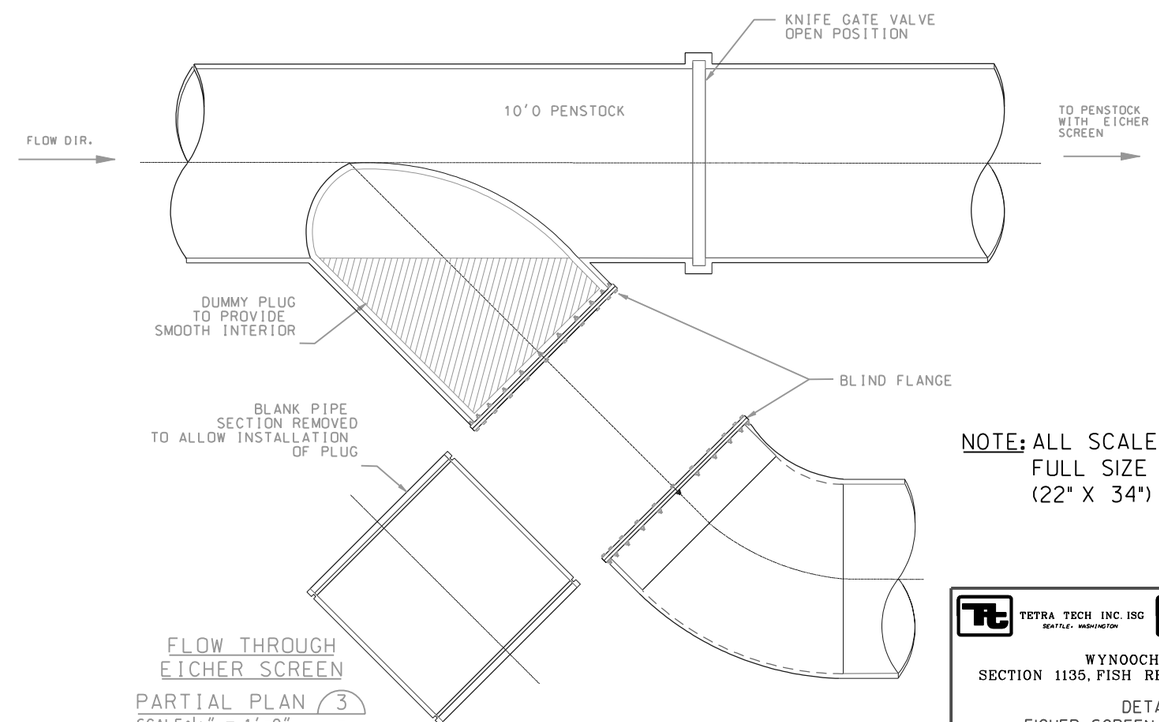

FLOW THROUGH
EICHER SCREEN

PARTIAL PLAN (3)

SCALE: 1/4" = 1'-0"

NOTE: ALL SCALES REPRESENT FULL SIZE DRAWINGS (22" X 34")

10% DESIGN

TETRA TECH INC. ISG
SEATTLE, WASHINGTON

U.S. ARMY ENGINEER DISTRICT, SEATTLE
CORPS OF ENGINEERS
SEATTLE, WASHINGTON

WYNOOCHEE DAM
SECTION 1135, FISH RESTORATION PROJECT

DETAILS
EICHER SCREEN W/ PENSTOCK
BYPASS - ALTERNATIVE I

SIZE	INVITATION NO.	FILE NO.	DATE:	PLATE
D	DACA67-02-D-2009		JAN. 2003	MI
DSGN. IP		CHK. JS	SHEET 15	

REVISIONS				
SYMBOL	ZONE	DESCRIPTION	DATE	BY

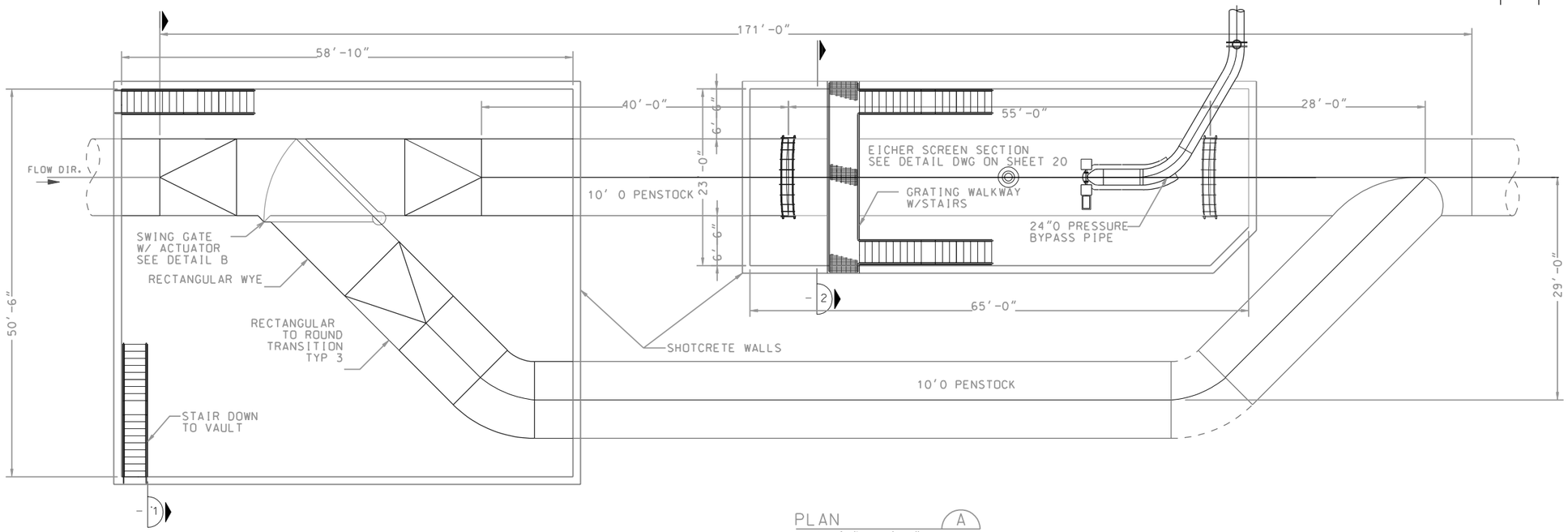

PLAN (A)
SCALE: 1/8" = 1'-0"

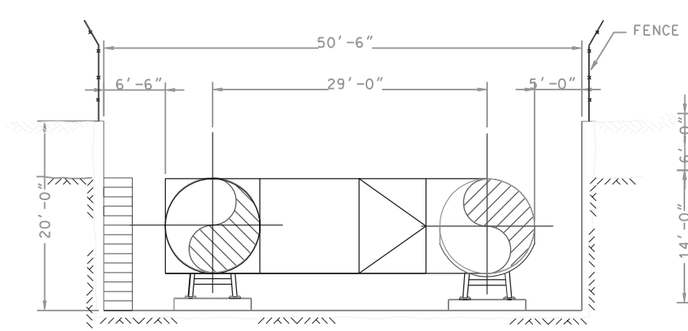

RECTANGULAR WYE VAULT SECTION
SECTION (1)
SCALE: 1/8" = 1'-0"

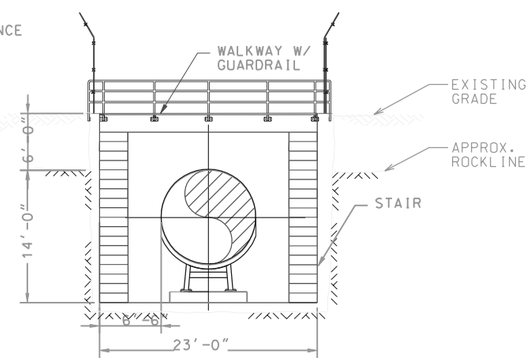

EICHER SCREEN VAULT SECTION
SECTION (2)
SCALE: 1/8" = 1'-0"

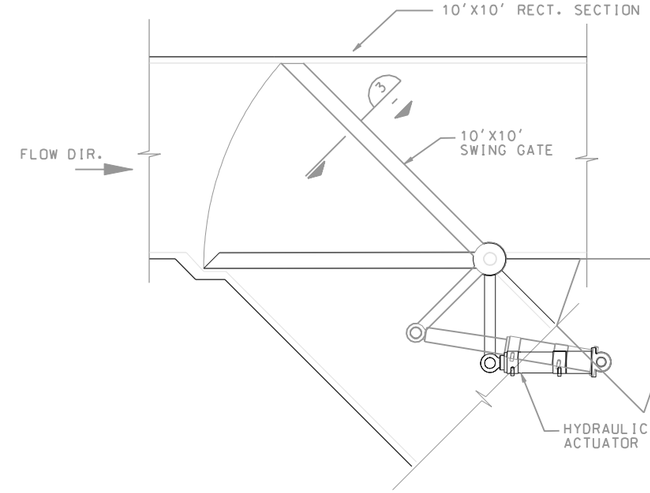

SWING GATE W/ACTUATOR
DETAIL (B)
SCALE: 1/4" = 1'-0"

GATE
SECTION (3)
SCALE: 1/4" = 1'-0"

NOTE: ALL SCALES REPRESENT FULL SIZE DRAWINGS (22" X 34")

10% DESIGN

TETRA TECH INC. ISG
SEATTLE, WASHINGTON

U.S. ARMY ENGINEER DISTRICT, SEATTLE
CORPS OF ENGINEERS
SEATTLE, WASHINGTON

WYNOOCHEE DAM
SECTION 1135, FISH RESTORATION PROJECT

DETAILS
EICHER SCREEN W/ PENSTOCK
BYPASS - ALTERNATIVE 2

SIZE	INVITATION NO.	FILE NO.	DATE:	PLATE
D	DACA67-02-D-2009		JAN. 2003	M2
DSGN. IP		CHK. JS	SHEET 16	

REVISIONS				
SYMBOL	ZONE	DESCRIPTION	DATE	BY

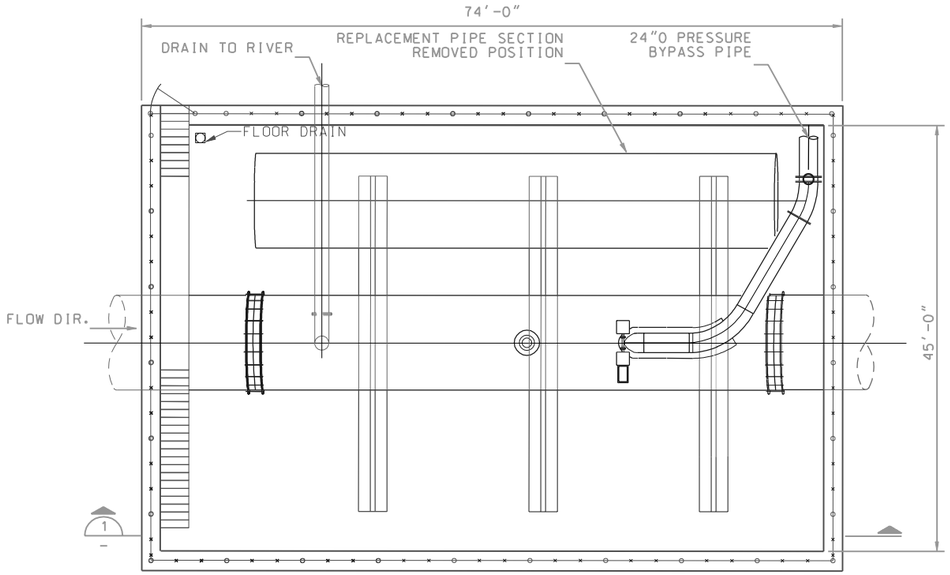

REPLACEABLE PENSTOCK
PLAN (A)
SCALE: 1/8" = 1'-0"

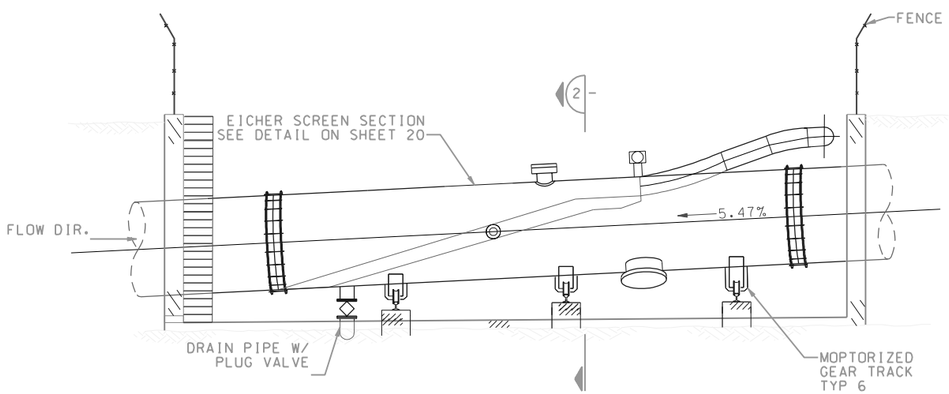

SECTION (1)
SCALE: 1/8" = 1'-0"

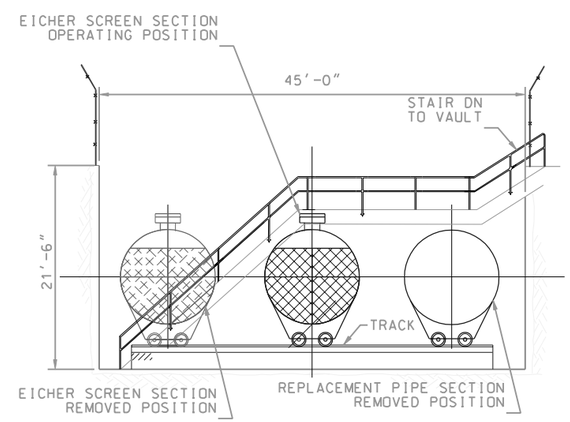

SECTION (2)
SCALE: 1/8" = 1'-0"

NOTE: ALL SCALES REPRESENT FULL SIZE DRAWINGS (22" X 34")

10% DESIGN

TETRA TECH INC. ISG
SEATTLE, WASHINGTON

U.S. ARMY ENGINEER DISTRICT, SEATTLE
CORPS OF ENGINEERS
SEATTLE, WASHINGTON

WYNOOCHEE DAM
SECTION 1135, FISH RESTORATION PROJECT

DETAILS
EICHER SCREEN W/ REPLACEABLE
PENSTOCK SECTION - ALTERNATIVE 3

SIZE	INVITATION NO.	FILE NO.	DATE:	PLATE
D	DACA67-02-D-2009		JAN. 2003	M3
DSGN. IP		CHK. JS	SHEET 17	

REVISIONS				
SYMBOL	ZONE	DESCRIPTION	DATE	BY

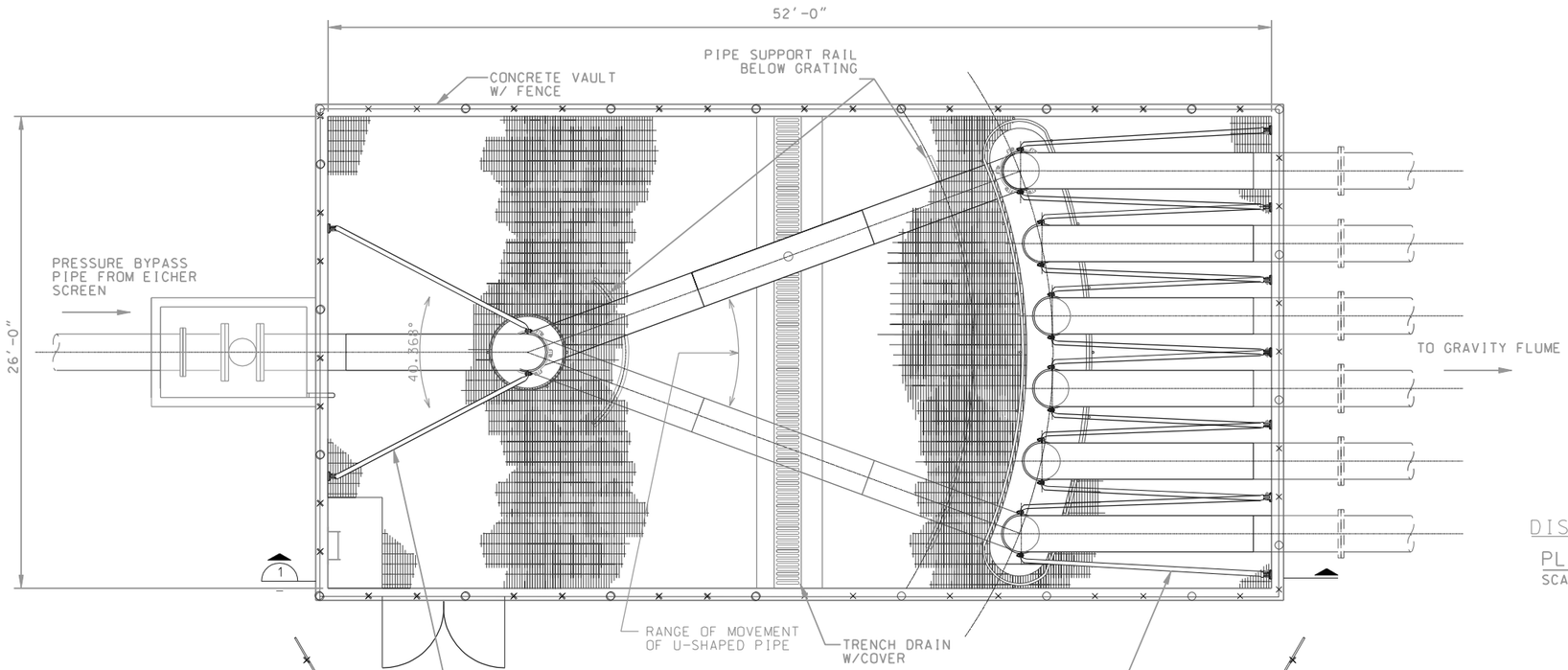

DISTRIBUTION VAULT
PLAN (A)
SCALE: 1/4" = 1'-0"

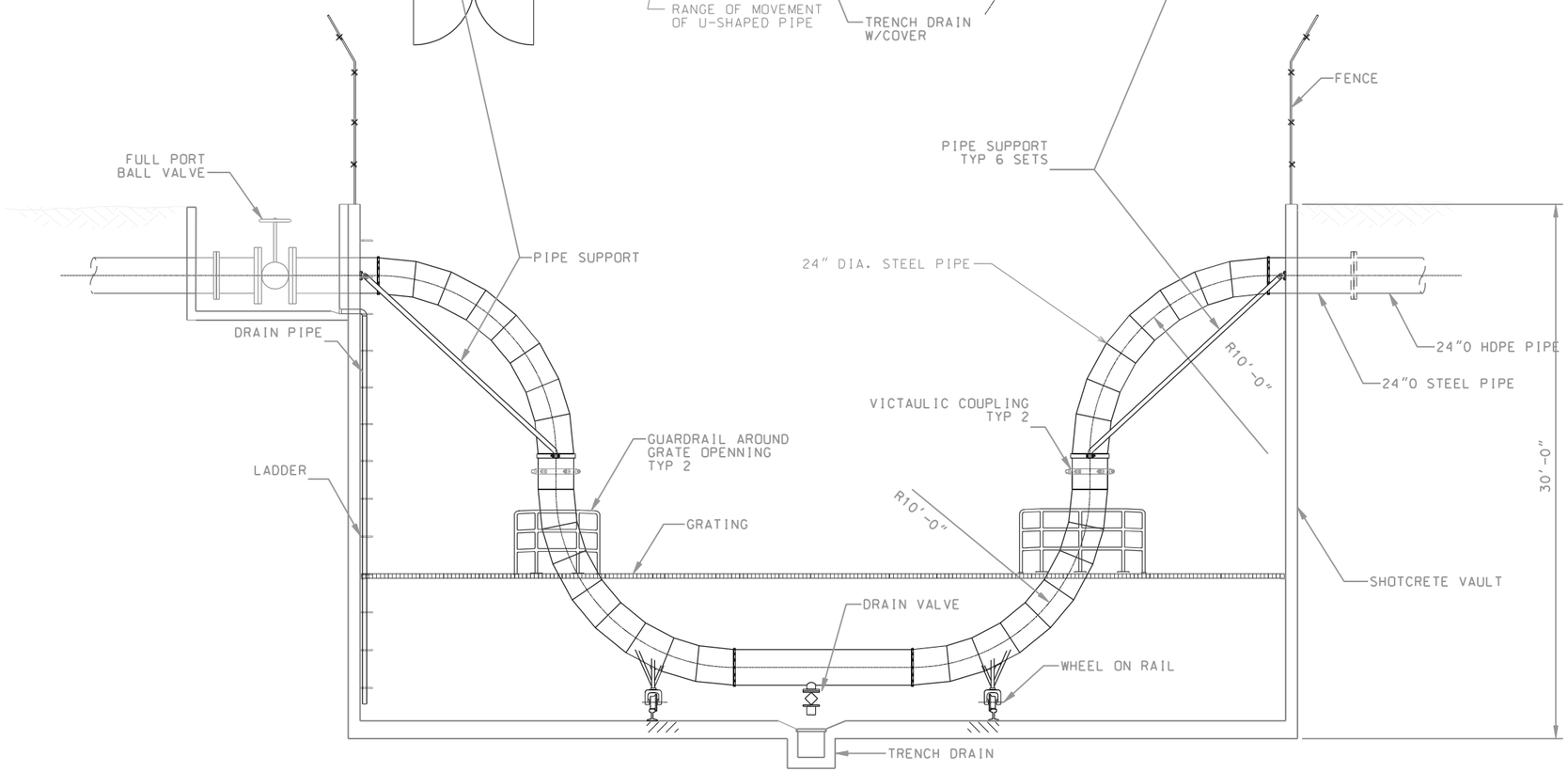

NOTE: ALL SCALES REPRESENT FULL SIZE DRAWINGS (22" X 34")

DISTRIBUTION VAULT
SECTION (1)
SCALE: 1/4" = 1'-0"

10% DESIGN

TETRA TECH INC. ISG
SEATTLE, WASHINGTON

U.S. ARMY ENGINEER DISTRICT, SEATTLE
CORPS OF ENGINEERS
SEATTLE, WASHINGTON

WYNOOCHEE DAM
SECTION 1135, FISH RESTORATION PROJECT

DETAILS
MULTILEVEL DISCHARGE SYSTEM
ALTERNATIVE I

SIZE	INVITATION NO.	FILE NO.	DATE:	PLATE
D	DACA67-02-D-2009		JAN. 2003	M4
DSGN. IP		CHK. JS	SHEET 18	

REVISIONS				
SYMBOL	ZONE	DESCRIPTION	DATE	BY

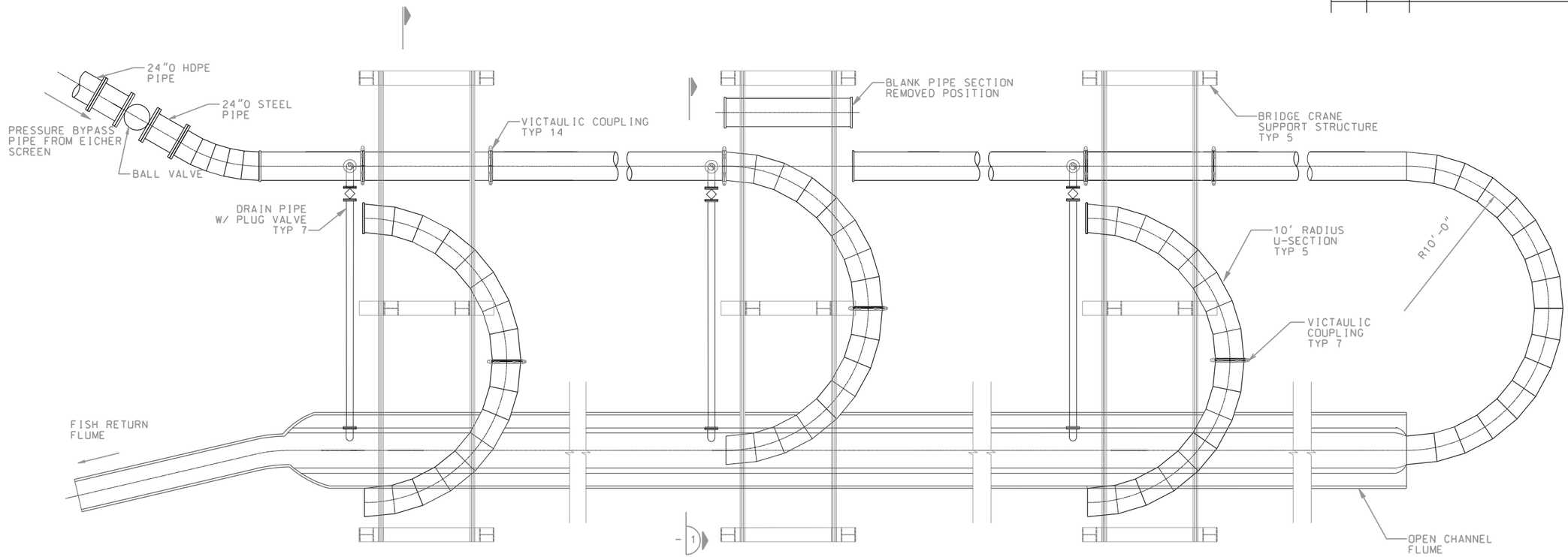

MUTLI-LEVEL DISCHARGE SYSTEM (ALTERNATIVE 2)

PLAN (A)

SCALE: 1/4" = 1'-0"

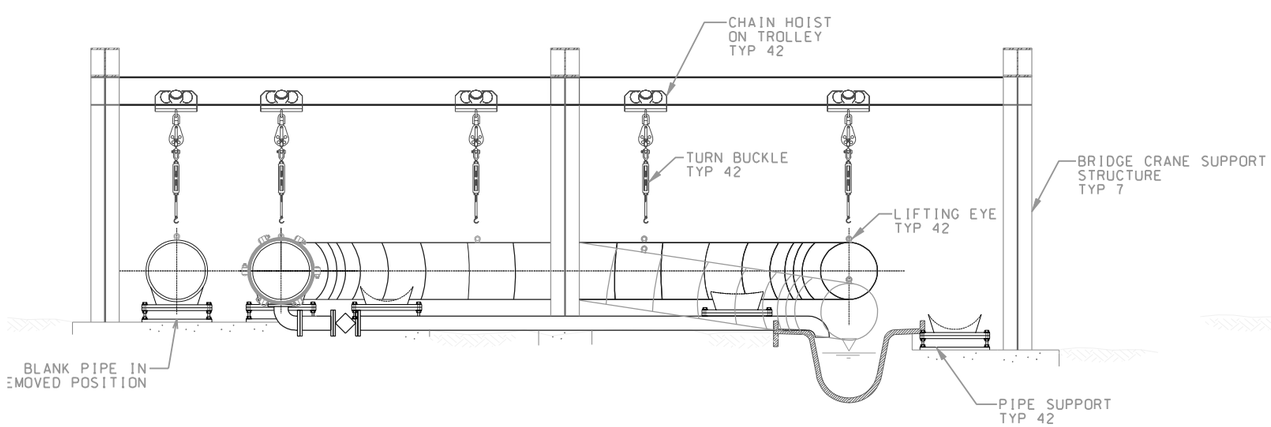

U-SECTION IN ACTIVE POSITION

SECTION (1)

SCALE: 3/8" = 1'-0"

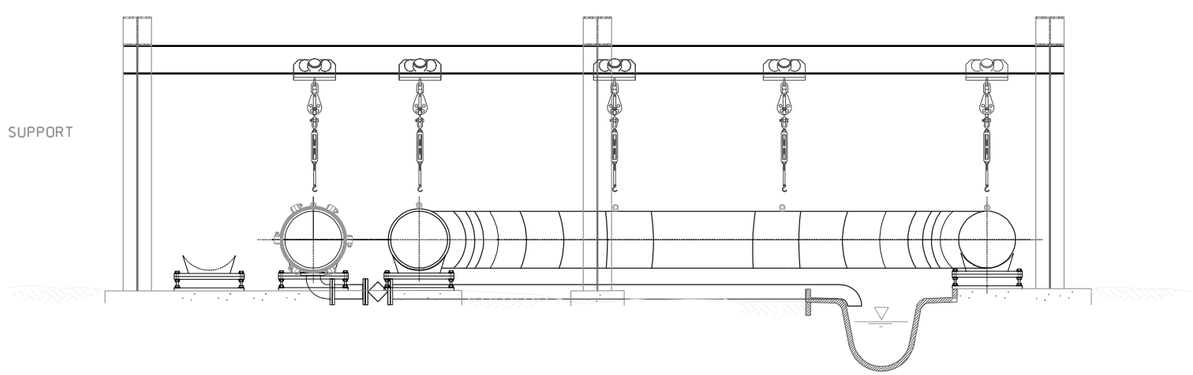

U-SECTION IN INACTIVE POSITION

SECTION (2)

SCALE: 3/8" = 1'-0"

NOTE: ALL SCALES REPRESENT FULL SIZE DRAWINGS (22" X 34")

10% DESIGN

TETRA TECH INC. ISG
SEATTLE, WASHINGTON

U.S. ARMY ENGINEER DISTRICT, SEATTLE
CORPS OF ENGINEERS
SEATTLE, WASHINGTON

WYNOOCHEE DAM
SECTION 1135, FISH RESTORATION PROJECT

DETAILS
MULTILEVEL DISCHARGE SYSTEM
ALTERNATIVE 2

SIZE	INVITATION NO.	FILE NO.	DATE:	PLATE
D	DACA67-02-D-2009		JAN. 2003	M5
DSGN. IP		CHK. JS	SHEET 19	

REVISIONS				
SYMBOL	ZONE	DESCRIPTION	DATE	BY

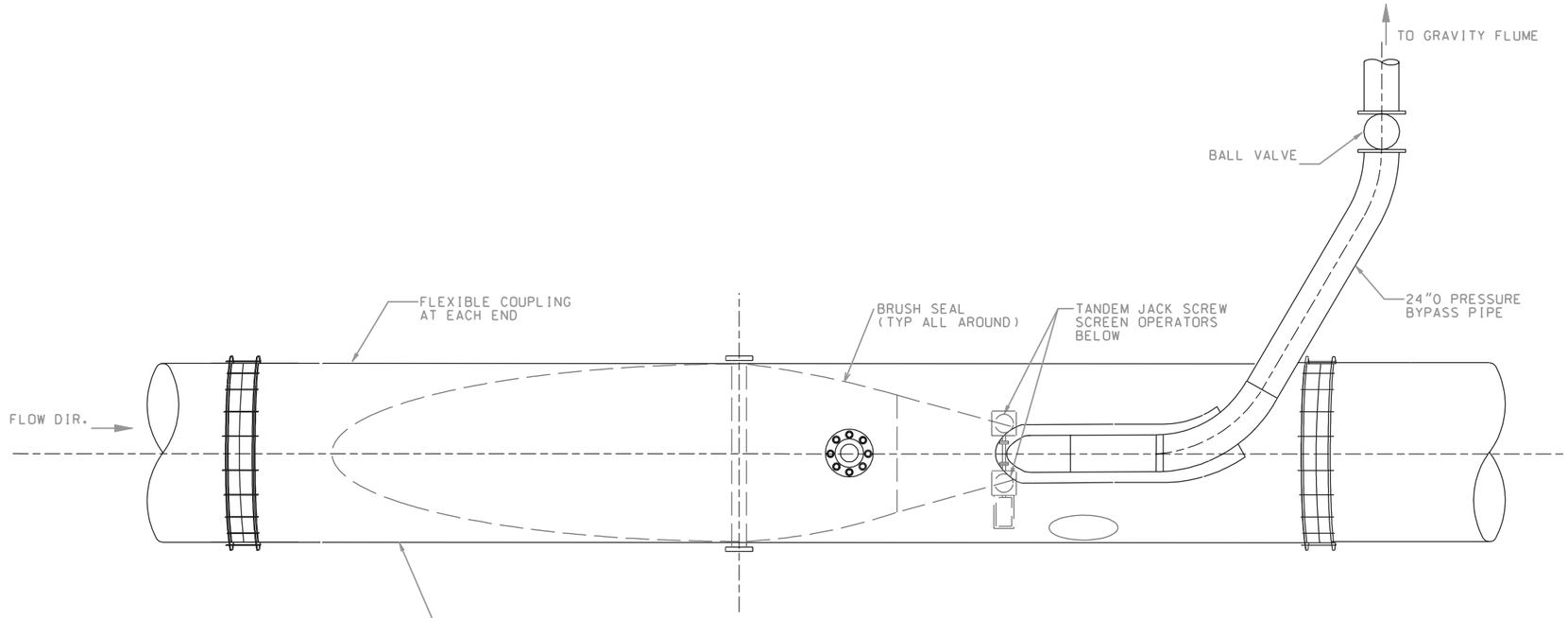

EICHERSCREEN

PLAN (A)

SCALE: 1/4" = 1'-0"

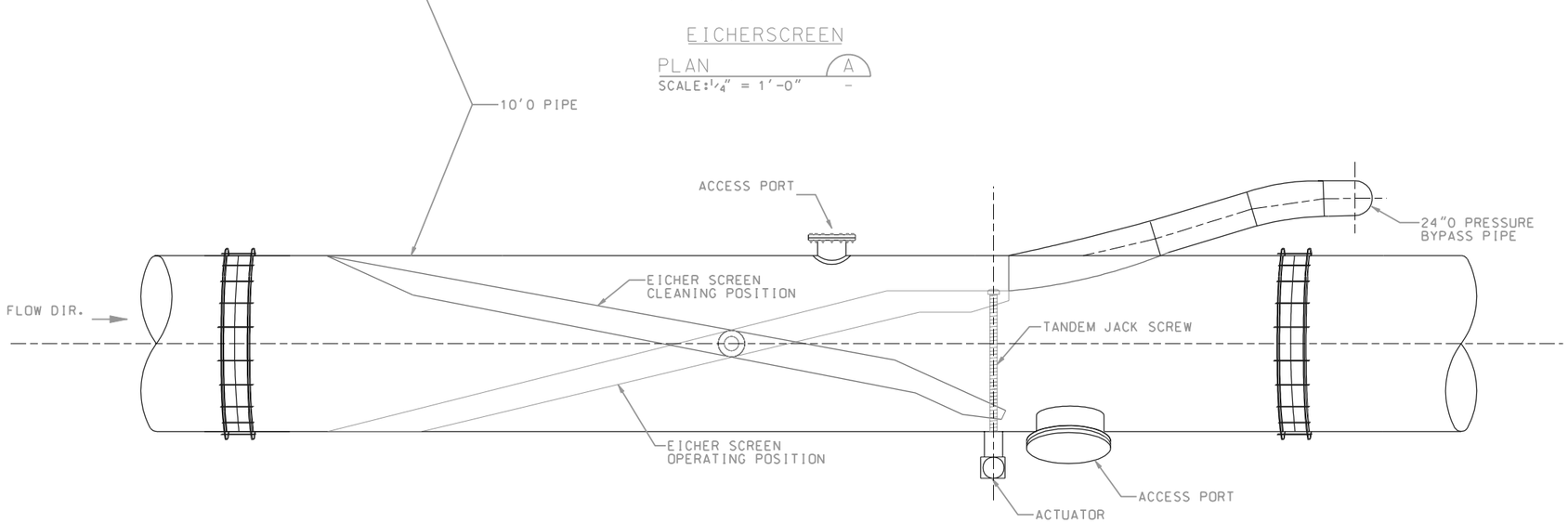

EICHERSCREEN

ELEVATION (1)

SCALE: 1/4" = 1'-0"

NOTE: ALL SCALES REPRESENT FULL SIZE DRAWINGS (22" X 34")

10% DESIGN

TETRA TECH INC. ISG
SEATTLE, WASHINGTON

U.S. ARMY ENGINEER DISTRICT, SEATTLE
CORPS OF ENGINEERS
SEATTLE, WASHINGTON

WYNOOCHEE DAM
SECTION 1135, FISH RESTORATION PROJECT

EICHER SCREEN DETAILS

SIZE	INVITATION NO.	FILE NO.	DATE:	PLATE
D	DACA67-02-D-2009		JAN. 2003	M6
DSGN. IP		CHK. JS	SHEET 20	

REVISIONS				
SYMBOL	ZONE	DESCRIPTION	DATE	BY

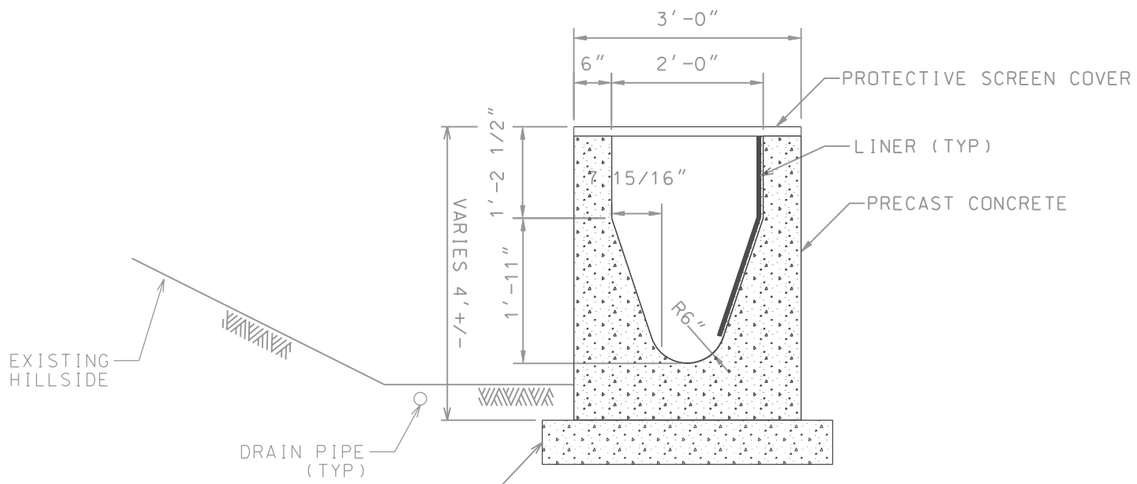

PRECAST CONCRETE FLUME
(ALTERNATIVE 1)
SECTION 1
SCALE:1" = 1'-0"

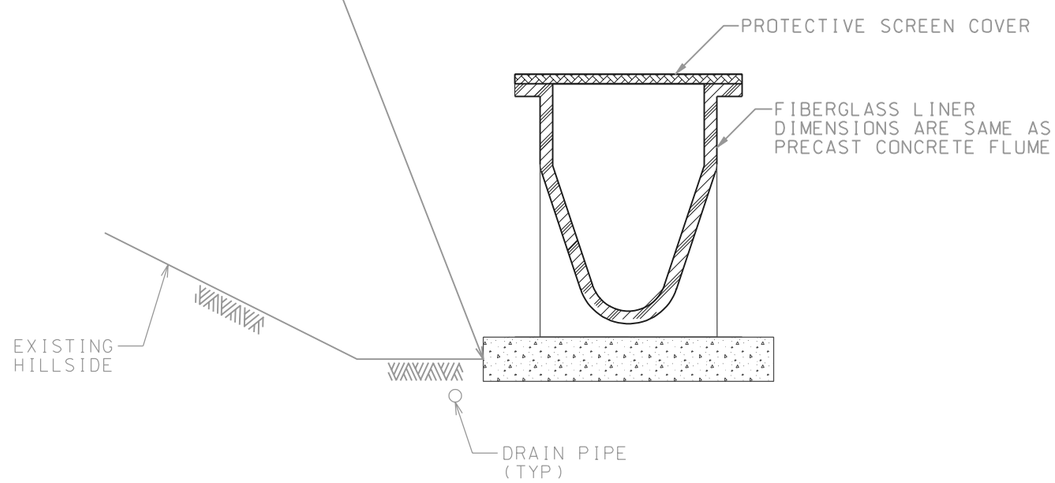

FIBERGLASS FLUME
(ALTERNATIVE 2)
SECTION 2
SCALE:1" = 1'-0"

NOTE: ALL SCALES REPRESENT FULL SIZE DRAWINGS (22" X 34")

10% DESIGN

TETRA TECH INC. ISG
SEATTLE, WASHINGTON

U.S. ARMY ENGINEER DISTRICT, SEATTLE
CORPS OF ENGINEERS
SEATTLE, WASHINGTON

WYNOOCHEE DAM
SECTION 1135, FISH RESTORATION PROJECT

FLUME SECTION DETAILS

SIZE	INVITATION NO.	FILE NO.	DATE:	PLATE
D	DACA67-02-D-2009		JAN. 2003	M7
DSGN. IP		CHK. JS	SHEET 21	