US Army Corps
of Engineers
Seattle District

Public Notice of Application for Permit

Regulatory Branch
Post Office Box 3755
Seattle, Washington 98124-3755
Telephone (206) 764-3495
ATTN: Rozwin Liera, Project Manager

Public Notice Date: August 30, 2004
Expiration Date: September 15, 2004
Reference: 200000642
Name: Pole Pass LLC

15 DAY PUBLIC NOTICE

Interested parties are hereby notified that an application has been received for a Department of the Army permit in accordance with Section 10 of the Rivers and Harbors Act of March 3, 1899, and Section 404 of the Clean Water Act for certain work described below and shown on the enclosed drawings.

APPLICANT – Pole Pass LLC
1500 Fourth Avenue, Suite 200
Seattle, WA 98101
ATTN: Mr. H.S. Wright III
Telephone: (206) 674-3021

AGENT – Waterfront Construction, Inc.
205 Northeast Northlake Way, Suite 230
Seattle, Washington 98105-6816
ATTN: Mr. Steve Zuvela
Telephone: (206) 548-9800

LOCATION – In Pole Pass, at Orcas Island, San Juan County, Washington.

WORK – Construct a pier, install a ramp, float, anchoring system, drive piling and pour grout.

PURPOSE – Joint Use Recreational Boat Moorage.

ADDITIONAL INFORMATION – This proposed in-water structure replaces an existing pier and float (ramp has been washed away) in the same location as the proposed structure.

ENDANGERED SPECIES – The Endangered Species Act (ESA) of 1973, as amended, requires assessment of potential impacts to listed and proposed species. The Coastal/Puget Sound bull trout (*Salvelinus confluentus*), threatened; Puget Sound chinook (*Oncorhynchus tshawytscha*), threatened; Steller sea lion (*Eumetopias jubatus*), threatened; Humpback whale (*Megaptera novaeangliae*), endangered; Bald eagle (*Haliaeetus leucocephalus*) threatened; Leatherback sea turtle (*Dermochelys coriacea)*, listed endangered; Marbled murrelet (*Brachyramphus marmoratus*), threatened in the state of Washington, occurs in the proposed project area. For Steller sea lion and Marbled murrelet, critical habitat has been designated. A preliminary determination indicates that the activity may affect, but is not likely to adversely affect endangered or threatened species, or their critical habitat, designated under the Endangered Species Act of 1973. On June 4, 2004, both the U.S. Fish and Wildlife Service (USFWS) and National Oceanic and Atmospheric Administration (NOAA) concurred with our determination.

ESSENTIAL FISH HABITAT – The Magnuson-Stevens Fishery Conservation and Management Act (MSA), as amended by the Sustainable Fisheries Act of 1996, requires all Federal agencies to consult with the National Marine Fisheries Service (NMFS) on all actions, or proposed actions, permitted, funded, or undertaken by the agency, that may adversely affect Essential Fish Habitat (EFH). EFH for Pacific salmon, groundfish, coastal pelagic species occurs in the project area. The proposed action would impact 970 square feet of EFH for these species. The U.S. Army Corps of Engineers (Corps) has determined that the proposed action will not adversely affect designated EFH for federally-managed fisheries in Washington waters. No further EFH consultation is necessary.

CULTURAL RESOURCES – The District Engineer has reviewed the latest published version of the National Register of Historic Places, lists of properties determined eligible and other sources of information. The following is current knowledge of the presence or absence of historic properties and the effects of the undertaking upon these properties: Historic/cultural resources may occur in the permit area. These resources are expected to be buried onshore. The Corps has determined that these properties will not be affected by the proposed project because; a) the substrate is rock landward of the MLLW at the location of the proposed in-water structure; and b) this application is only for an in-water structure and contains no bank disturbance with the exception of vertical drilling and grouting in the rock to place piling.

The District Engineer invites responses to this public notice from Federal, Native American Nations or tribal governments, State, and local agencies, historical and archeological societies, and other parties likely to have knowledge of or concerns with historic properties in the area.

PUBLIC HEARING – Any person may request, in writing, within the comment period specified in this notice, that a public hearing be held to consider this application. Requests for public hearings shall state, with particularity, the reasons for holding a public hearing.

EVALUATION – The decision whether to issue a permit will be based on an evaluation of the probable impact, including cumulative impacts of the proposed activity on the public interest. That decision will reflect the national concern for both protection and utilization of important resources. The benefits which reasonably may be expected to accrue from the proposal must be balanced against its reasonably foreseeable detriments. All factors which may be relevant to the proposal will be considered, including the cumulative effects thereof; among those are conservation, economics, aesthetics, general environmental concerns, wetlands, historic properties, fish and wildlife values, flood hazards, floodplain values, land use, navigation, shoreline erosion and accretion, recreation, water supply and conservation, water quality, energy needs, safety, food and fiber production, mineral needs, considerations of property ownership, and, in general, the needs and welfare of the people.

The Corps is soliciting comments from the public; Federal, Native American Nations or tribal governments, State, and local agencies and officials; and other interested parties in order to consider and evaluate the impacts of this activity. Any comments received will be considered by the Corps to determine whether to issue, modify, condition or deny a permit for the work. To make this decision, comments are used to assess impacts on endangered species, historic properties, water quality, general environmental effects, and the other public interest factors listed above. Comments are used in the preparation of an Environmental Assessment and/or an Environmental Impact Statement pursuant to the National Environmental Policy Act. Comments are also used to determine the need for a public hearing and to determine the overall public interest of the activity.

ADDITIONAL EVALUATION – The State of Washington is reviewing this work for consistency with the approved Washington Coastal Zone Management Program.

This proposal is the subject of Shorelines Substantial Development Permit No. HE 70-00 (00SJ034) which has been issued by San Juan County.

COMMENT AND REVIEW PERIOD – Conventional mail or e-mail comments on this public notice will be accepted and made part of the record and will be considered in determining whether it would be in the public interest to authorize this proposal. In order to be accepted, e-mail comments must originate from the author's e-mail account and must include on the subject line of the e-mail message the permit applicant's name and reference number as shown below. All e-mail comments should be sent to Rozwin.K.Liera@nws02.usace.army.mil. Conventional mail comments should be sent ATTN: Regulatory Branch. Both conventional mail or e-mail comments must include the permit applicant's name and reference number, as shown below, and the commentor's name, address, and phone number. All comments whether conventional mail or e-mail must reach this office, no later than the expiration date of this public notice to ensure consideration. Please include the following name and reference number:

Pole Pass LLC
200000642

Encl
Drawings (8)

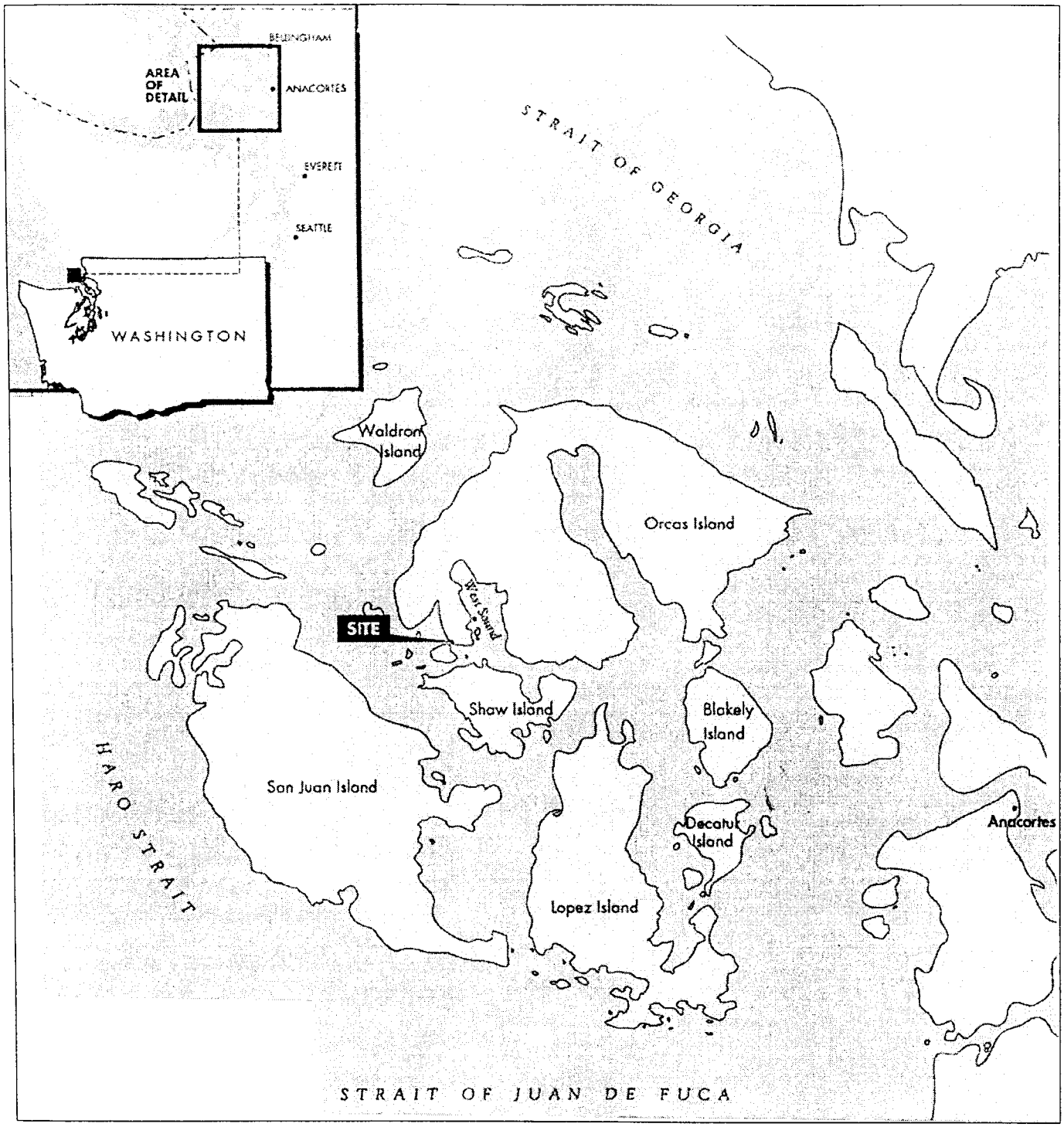

AREA MAP/NO SCALE

LAT: 48°-36'-14"
LONG: 122°-59'-23"

1/4 SEC: 18-36N-02W
TAXLOT #: 261844003

ADJACENT OWNERS: ① CALVIN & CLERENA MCLAUGHLIN P.O. BOX 28, DEER HARBOR ② DONALD KRAFT 18925 46TH AVE NE	PROPOSED: CONSTRUCT REPLACEMENT JOINT USE PIER. PURPOSE: PROVIDE FOR PRIVATE MOORAGE DATUM: N.O.S. MLLW=0.0'	APPLICANT: JEFF WRIGHT SITE ADD. 6778 DEER HARBOR ROAD DEER HARBOR, 98245 MAIL ADD. 12330 NE 8TH ST. #101 BELLEVUE 98005 PAGE: 1 OF 8 DATE: 3-1-02

Revised: 8-5-04

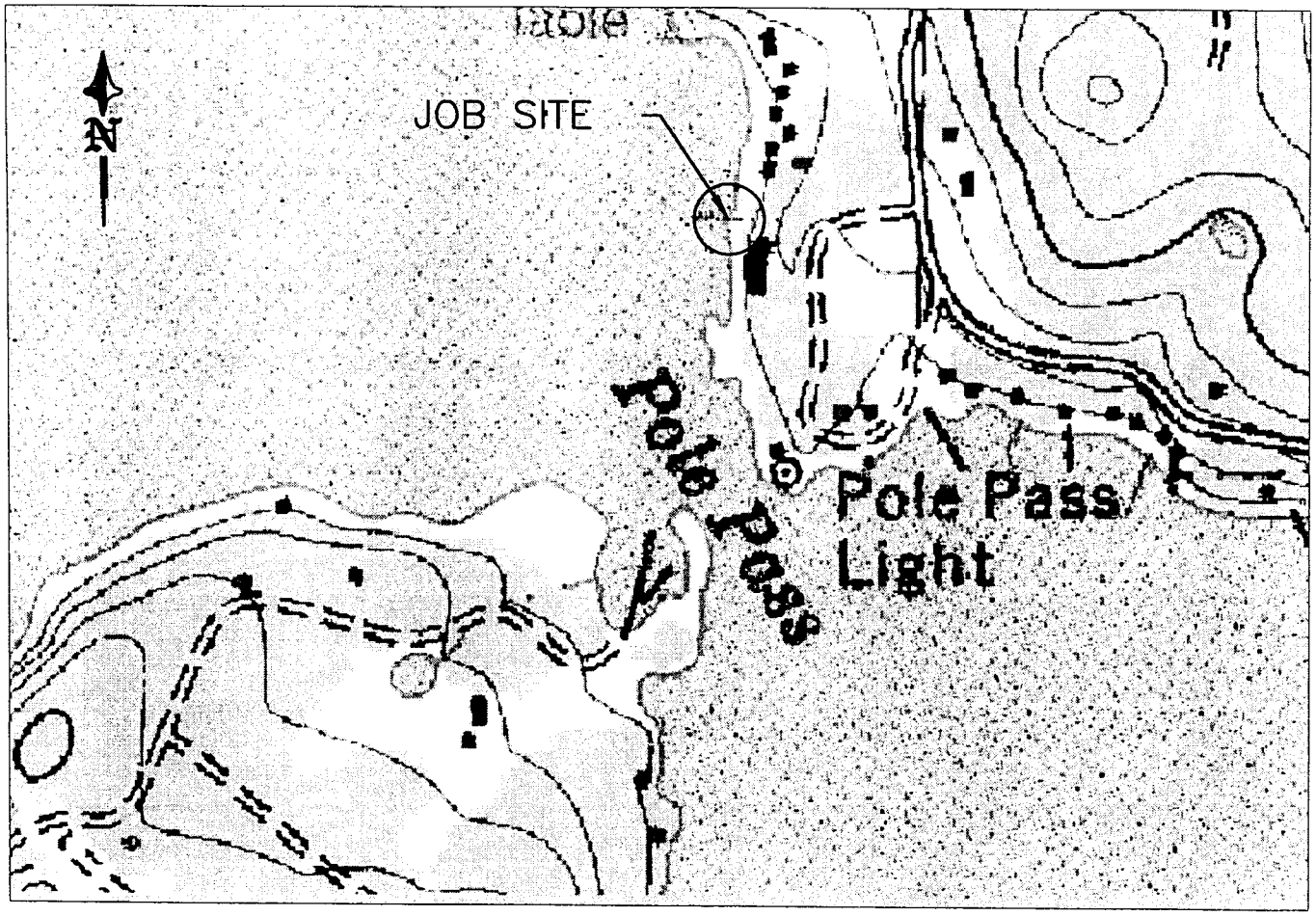

VICINITY MAP/ NO SCALE

PROPOSED: CONSTRUCT REPLACEMENT JOINT USE PIER.	
IN: ORCAS ISLAND	
AT: POLE PASS	APPLICATION#:
APPLICANT: JEFF WRIGHT 6778 DEER HARBOR ROAD DEER HARBOR, 98245	
PAGE: 2 OF: 8	
DATE: 3-1-02	DWG#: 3085-A2-1

Revised: 8-5-04

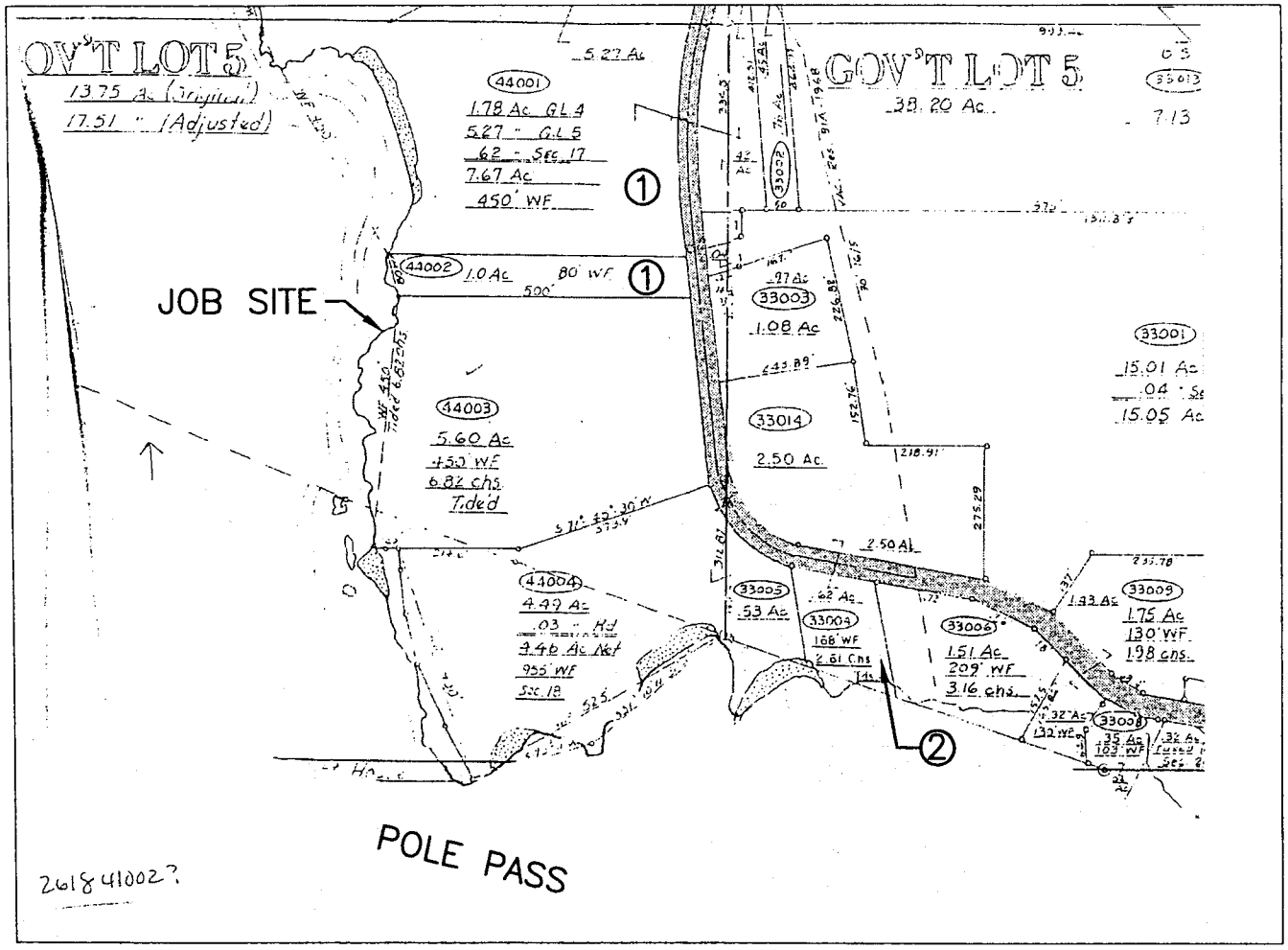

SITE PLAN

LEGAL DESCRIPTION:
BEGINNING AT A POINT WHICH IS 489.5 FEET SOUTH AND 136 FEET WEST OF THE NE CORNER OF SAID GOVERNMENT LOT 5, THENCE EAST TO THE WEST MARGIN OF COUNTRY ROAD; THENCE SOUTHERLY AND EASTERLY ALONG SAID WEST MARGIN TO A POINT THERON WHICH IS NORTH 0°19'40" WEST 277.86 FEET AND SOUTH 71°45'30" WEST 18.4 FEET FROM THE GOVERNMENT MEANDER CORNER BETWEEN SECTIONS 17 AND 18, WHICH POINT IS MARKED BY A 1 INCH IRON PIPE AT THE WEST MARGIN OF COUNTY ROAD; THENCE SOUTH 71°45'30" WEST 373.9 FEET; THENCE WEST 214.6 FEET TO A POINT MARKED BY A 1 INCH IRON PIPE ON THE BANK ABOVE THE BEACH; THENCE CONTINUING WEST 25 FEET, MORE OR LESS, TO THE WEST MARGIN OF GOVERNMENT LOT 5 (THE WEST MARGIN BEING THE LINE OF ORDINARY HIGH TIDE OR GOVERNMENT MEANDER LINE, WHICHEVER IS FARTHER OUT); THENCE NORTH ALONG THE WEST LINE OF GOVERNMENT LOT 5 TO A POINT DUE WEST OF THE POINT OF BEGINNING; THENCE EAST TO THE POINT OF BEGINNING

PROPOSED: CONSTRUCT REPLACEMENT JOINT USE PIER.	
IN: ORCAS ISLAND	
AT: POLE PASS	
APPLICANT: JEFF WRIGHT 6778 DEER HARBOR ROAD DEER HARBOR, 98245	
PAGE: 3 OF: 8	
DATE: 3-1-02	DWG#: 3085-A3-1

Revised: 8-5-04

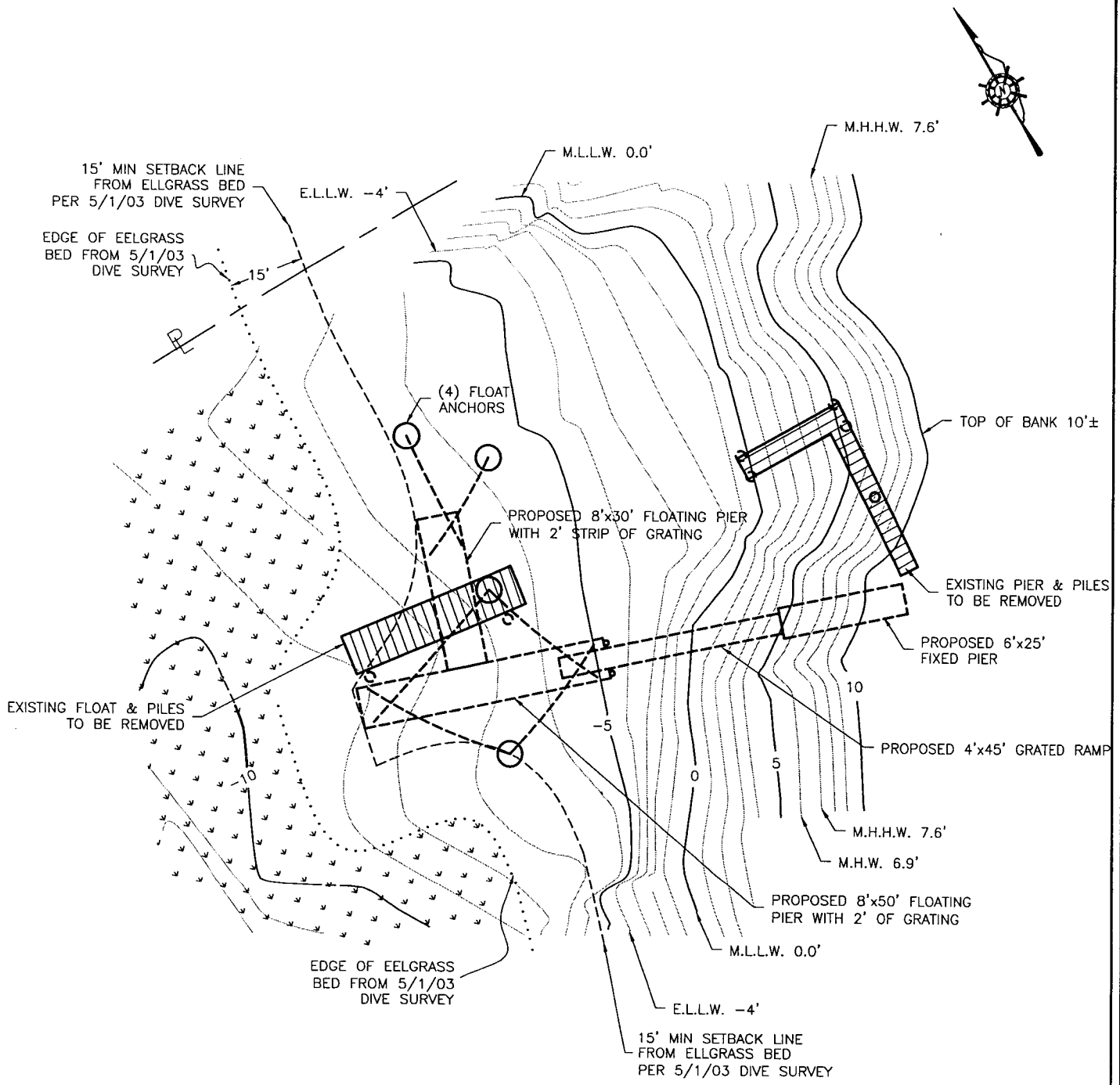

EXISTING PLAN VIEW

30' 15' 0' 30'

SCALE: 1"=30'

REMOVE EXISTING PIER & PILINGS. CONSTRUCT NEW FIXED PILE PIER 6'x25' WITH A 4'x45' RAMP DOWN TO A 8'x50' MAIN FLOAT, WILL BE SECURED WITH PILES & ANCHORS. AN 8'x30' FLOAT WILL BE LOCATED SHOREWARD OF & PERPENDICULAR TO THE MAIN FLOAT. FLOATS & PIER TO BE SECURED WITH PILES & ANCHORS.

PROPOSED: CONSTRUCT REPLACEMENT JOINT USE PIER.	
IN: ORCAS ISLAND	
AT: POLE PASS	
APPLICANT: JEFF WRIGHT 6778 DEER HARBOR ROAD DEER HARBOR, 98245	
PAGE: 4 OF: 8	
DATE: 3-1-02	DWG#: 3085-A4-1

Revised: 8-5-04

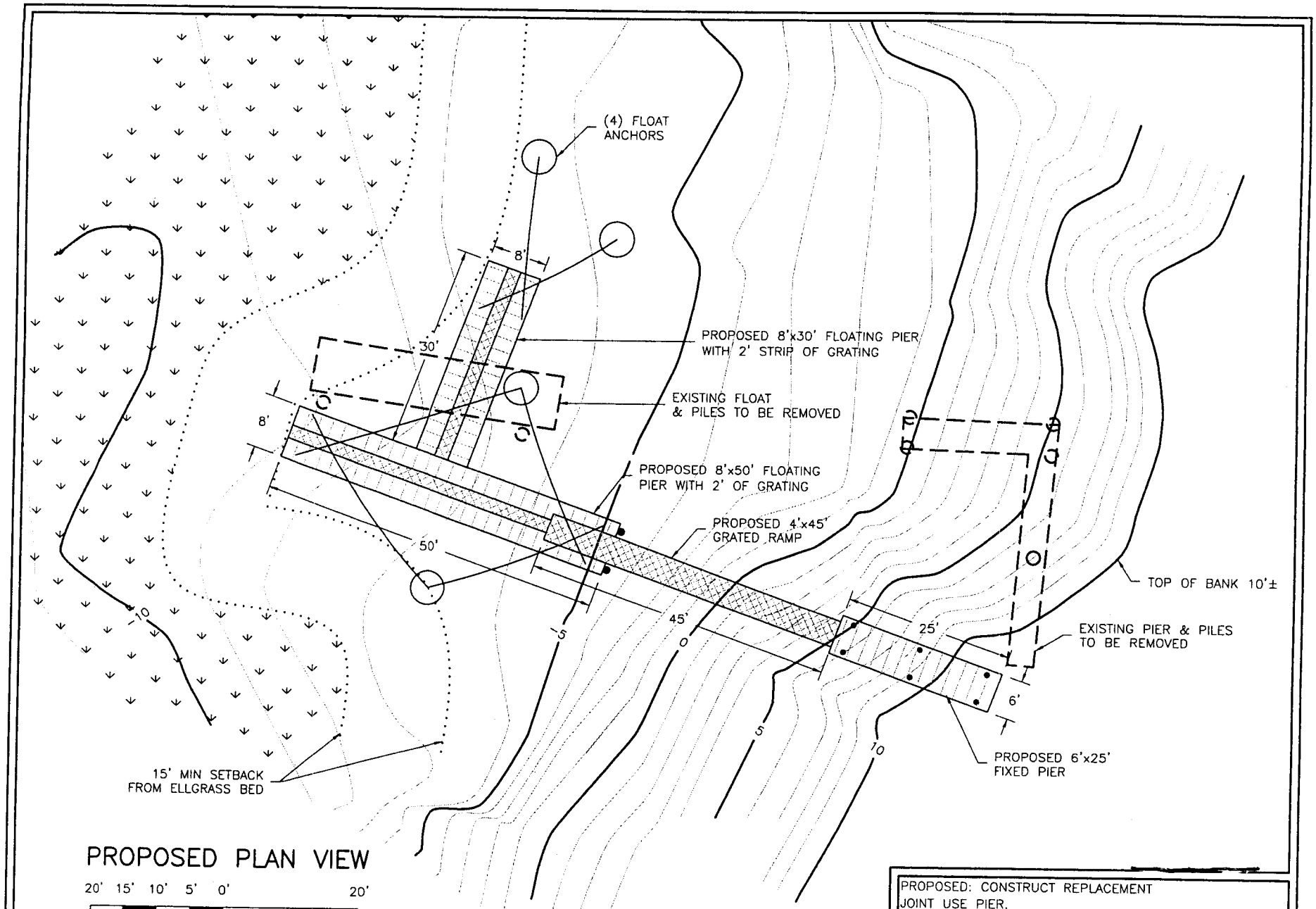

PROPOSED PLAN VIEW

20' 15' 10' 5' 0' 20'

SCALE: 1"=20'

REMOVE EXISTING PIER & PILINGS. CONSTRUCT NEW FIXED PILE PIER 6'x25' WITH A 4'x45' RAMP DOWN TO A 8'x50' MAIN FLOAT, WILL BE SECURED WITH PILES & ANCHORS. AN 8'x30' FLOAT WILL BE LOCATED SHOREWARD OF & PERPENDICULAR TO THE MAIN FLOAT. FLOATS & PIER TO BE SECURED WITH PILES & ANCHORS.

PROPOSED: CONSTRUCT REPLACEMENT JOINT USE PIER.	
IN: ORCAS ISLAND	
AT: POLE PASS	
APPLICANT: JEFF WRIGHT 6778 DEER HARBOR ROAD DEER HARBOR, 98245	
PAGE: 5 OF: 8	
DATE: 3-1-02	DWG#: 3085-A5-2

Revised: 8-5-04

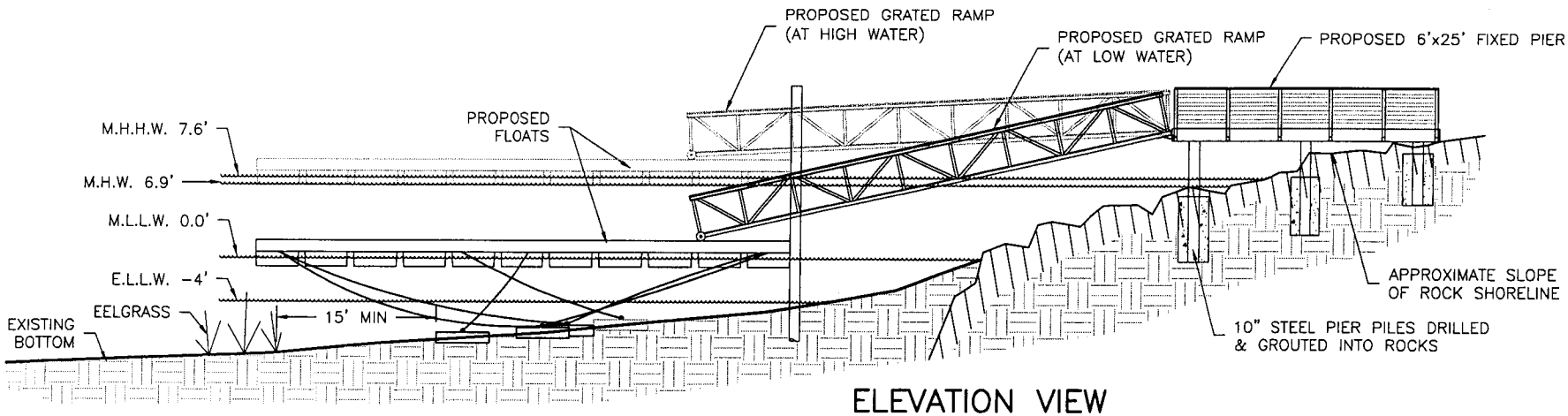

ELEVATION VIEW

16' 8' 4' 0' 16'

SCALE: 1/16"=1'

REMOVE EXISTING PIER & PILINGS. CONSTRUCT NEW FIXED PILE PIER 6'x25' WITH A 4'x45' RAMP DOWN TO A 8'x50' MAIN FLOAT, WILL BE SECURED WITH PILES & ANCHORS. AN 8'x30' FLOAT WILL BE LOCATED SHOREWARD OF & PERPENDICULAR TO THE MAIN FLOAT. FLOATS & PIER TO BE SECURED WITH PILES & ANCHORS.

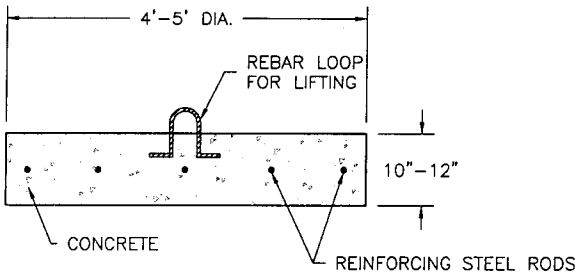

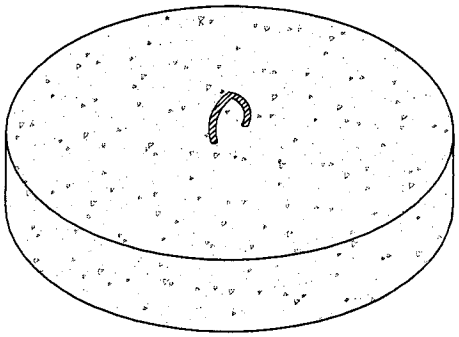

CONCRETE ANCHOR DETAILS

2' 1' 6" 0' 2'

SCALE: 3/8"=1'

NOT TO SCALE

PROPOSED: CONSTRUCT REPLACEMENT JOINT USE PIER.	
IN: ORCAS ISLAND	
AT: POLE PASS	
APPLICANT: JEFF WRIGHT 6778 DEER HARBOR ROAD DEER HARBOR, 98245	
PAGE: 6 OF: 8	
DATE: 3-1-02	DWG#: 3085-A6-2

Revised: 8-5-04

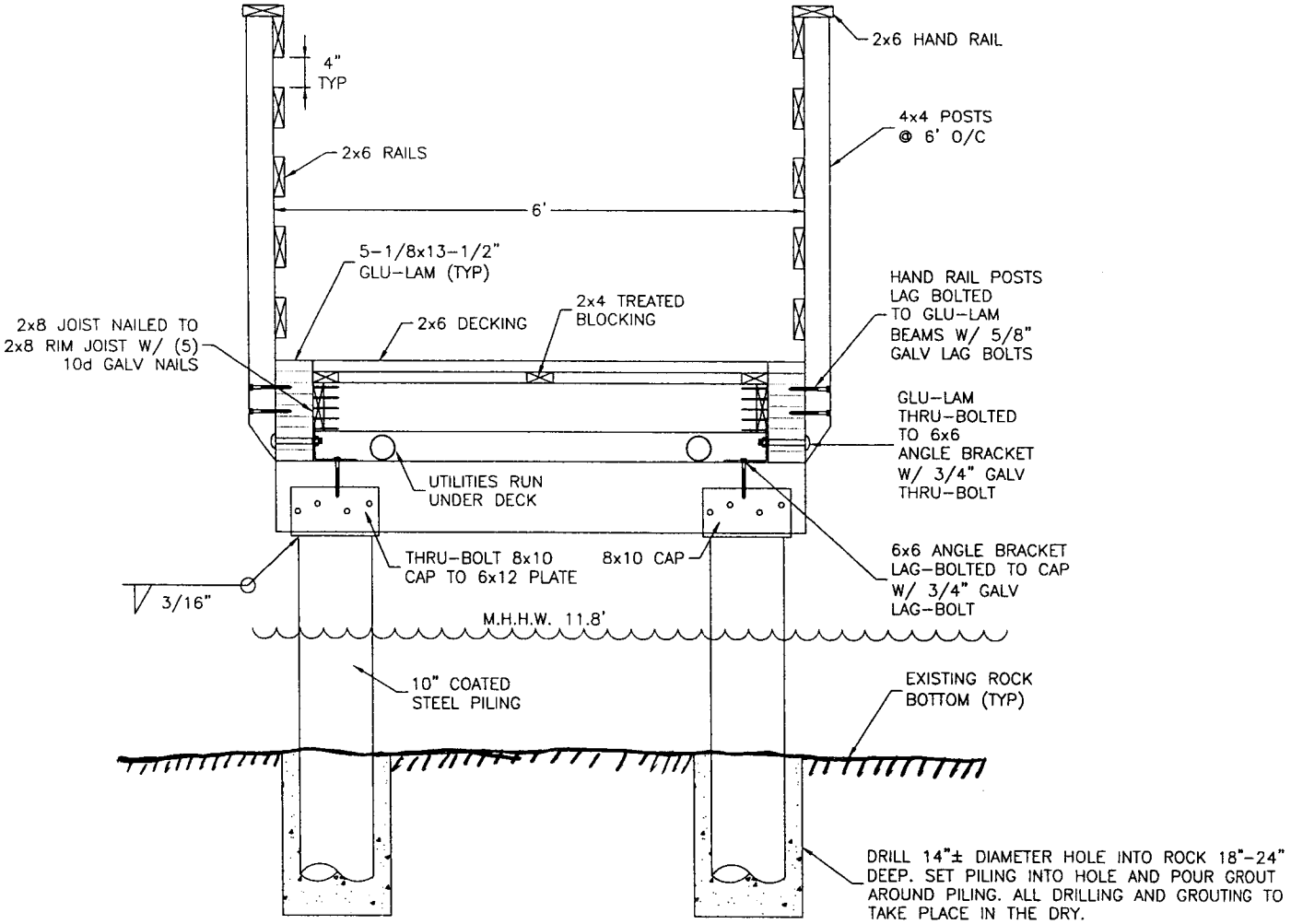

FIXED PIER SECTION VIEW

2' 1' 0' 2'

SCALE: 1/2"=1'

ALL HARDWARE TO BE HOT DIPPED GALVANIZED. GLU-LAMS TO BE TREATED WITH CHEMONITE (ACZA). JOISTS TO BE PRESSURE TREATED. ALL 10" COATED STEEL PILING TO BE DRILLED AND GROUTED INTO SHORELINE. UTILITIES TO RUN UNDER DECK OF MAINWALK AND FLOAT.

PROPOSED: CONSTRUCT REPLACEMENT JOINT USE PIER.	
IN: ORCAS ISLAND	
AT: POLE PASS	
APPLICANT: JEFF WRIGHT 6778 DEER HARBOR ROAD DEER HARBOR, 98245	
PAGE: 7 OF: 8	
DATE: 3-1-02	DWG#: 3085-A7-1

Revised: 8-5-04

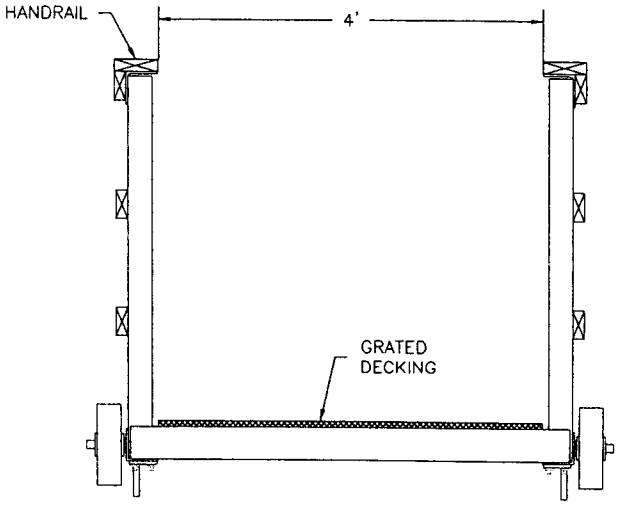

GRATED RAMP SECTION

2' 1' 0' 2'

SCALE: 1/2"=1'

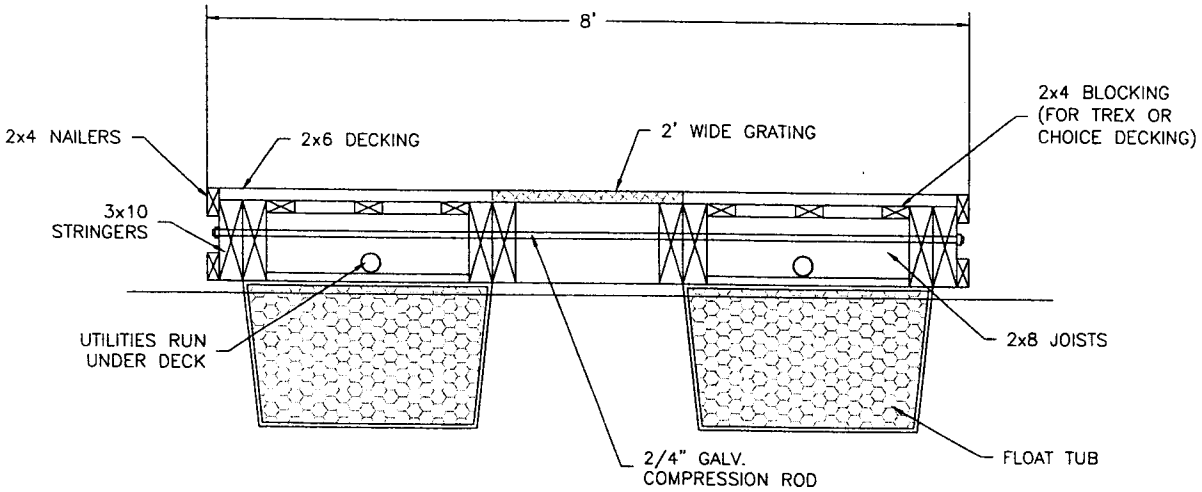

TYPICAL 8' FLOAT SECTION VIEW

2' 1' 0' 2'

SCALE: 1/2"=1'

ALL HARDWARE TO BE HOT-DIPPED GALVANIZED. ALL STRINGERS, JOISTS AND BLOCKING TO BE DF #1 OR BETTER TREATED WITH COPPER 8 QUINOLINOLATE. INSTALL GRATING FOR LIGHT PENETRATION. UTILITIES TO RUN UNDER DECK ON MAINWALK AND FLOAT

PROPOSED: CONSTRUCT REPLACEMENT JOINT USE PIER.	
IN: ORCAS ISLAND	
AT: POLE PASS	
APPLICANT: JEFF WRIGHT 6778 DEER HARBOR ROAD DEER HARBOR, 98245	
PAGE: 8 OF: 8	
DATE: 3-1-02	DWG#: 3085-A8-1

Revised: 8-5-04

STATE OF WASHINGTON
DEPARTMENT OF ECOLOGY
P.O. Box 47600 • Olympia, Washington 98504-7600
(360) 407-6000 • TDD Only (Hearing Impaired) (360) 407-6006

STATE OF WASHINGTON
DEPARTMENT OF ECOLOGY

Notice of Application for
Water Quality Certification
and for
Certification of Consistency with the
Washington Coastal Zone Management Program

Date: August 30, 2004

Notice is herby given that a request has been filed with the Department of Ecology, pursuant to the requirements of Section 401 of the federal Clean Water Act of 1977 (PL 95-217), to certify that the project described in the U.S. Army Corps of Engineers Public Notice No. 200000642 will comply with the Sections 301, 302, 303, 306, and 307 of the Act, and with applicable provisions of State and Federal water pollution control laws.

Notice is herby given that a request has been filed with the Department of Ecology, pursuant to the requirements of Section 307© of the Federal Coastal Zone Management Act of 1972 (16 U.S.C. 1451), to certify that the above referenced project will comply with the Washington State Coastal Zone Management Program and that the project will be conducted in a manner consistent with that program.

Any person desiring to present views on the project pertaining to the project on either or both (1) compliance with water pollution control laws or (2) the project's compliance or consistency with the Washington State Coastal Zone Management Program may do so by providing written comments within 15 days of the above publication date to:

Federal Permit Coordinator
Department of Ecology
SEA Program
Post Office Box 47600
Olympia, Washington 98504-7600