US Army Corps
of Engineers
Seattle District

Public Notice of Application for Permit

Regulatory Branch
Post Office Box 3755
Seattle, Washington 98124-3755
Telephone (206) 764-3495
ATTN: Randel Perry, Project Manager

Public Notice Date: June 10, 2004
Expiration Date: July 10, 2004
Reference: 200400104
Name: Anchor Cove Marina Condominium Association

Interested parties are hereby notified that an application has been received for a Department of the Army permit in accordance with Section 10 of the Rivers and Harbors Act of March 3, 1899, and Section 404 of the Clean Water Act for certain work described below and shown on the enclosed drawings.

APPLICANT - Anchor Cove Marina Condominium Association
1600 - 5th Street
Anacortes, Washington 98221
ATTN: Mr. Richard (Beau) Pease
Telephone: (360) 293-7033

AGENT - Layton and Sell, Inc. Consulting Engineers
12515 Willows Road, Suite 205
Kirkland, Washington 98034-8795
ATTN: Mr. Jeffrey Layton
Telephone: (425) 825-1735

LOCATION - In the Anchor Cove Marina basin adjacent to Guemes Channel at Anacortes, Washington.

WORK - Undertake maintenance dredging of 40,400 cubic yards of material over a period of 10 years. Initial dredging will involve removal of 20,400 cubic yards from the basin. Schedule calls for 10,000 cubic yards to be dredged in year 5 and 10,000 cubic yards to be dredged in year 10. Dredging will be by barge-mounted clamshell dredge and floating hydraulic cutterhead dredger with sediment disposal by bottom-dump barge.

PURPOSE - To restore access and ensure safety of vessels using marina moorage facilities.

PUGET SOUND DREDGED DISPOSAL ANALYSIS (PSDDA) - The proposed dredged material has been tested according to the procedures specified in PSDDA, a multi-agency program for the evaluation of dredged material proposed for disposal at open-water sites in Puget Sound. The PSDDA evaluations may include both chemical and biological testing of sediments. For this project, the PSDDA agencies determined that the 40,400 cubic yards to be dredged initially were suitable for unconfined disposal at the PSDDA nondispersive (or dispersive) open-water disposal site in Rosario Strait. The sediment testing data are available at the U.S. Army Corps of Engineers (Corps), Seattle District, Dredged Material Management Office. Prior to each maintenance dredging cycle, the PSDDA agencies will determine whether additional sediment testing is required. If additional testing is required, no disposal will take place at a PSDDA site until the material has been determined suitable for open-water disposal by the PSDDA agencies.

The following standard site use conditions will be specified by the Corps and the Washington Department of Natural Resources as part of the Federal/State permitting processes: (1) during the periods of tribal fishing in the disposal site area, disposal will only occur during daylight hours; and (2) during the daylight hours, "navigation rules of the road" will apply to the dredger in the event Indian treaty fishing is occurring at the disposal site. The dredger's permit will state that disposal is to occur when there is no treaty fishing occurring at the disposal site. Other appropriate special conditions may be added as a result of comments received during the public review period for this public notice.

ADDITIONAL INFORMATION - Previous maintenance dredging actions in the Anchor Cove Marina basin were authorized under Corps permits #199700566 (issued on April 25, 1997) and OYB-2-13519 (issued on November 4, 1991).

ENDANGERED SPECIES - The bald eagle (*Haliaeetus leucocephalus*), listed threatened; marbled murrelet (*Brachyramphus marmoratus),* listed threatened; Puget Sound chinook salmon (*Oncorhynchus tshawytscha*), listed threatened; Coastal/Puget Sound bull trout (*Salvelinus confluentus),* listed threatened; Puget Sound / Strait of Georgia coho salmon (*Oncorhynchus kisutch*), candidate for listing; steller sea lion (*Eumetopias jubatus)*, listed threatened; humpback whale *(Megaptera novaeangliae)*, listed endangered; and leatherback sea turtle *(Dermochelys coriacea)*, listed endangered in the state of Washington, occur in the proposed project area. After receipt of comments from this public notice, the Corps will evaluate the potential impacts to the bald eagle, marbled murrelet, Puget Sound chinook salmon, Coastal/Puget Sound bull trout, and steller sea lion, humpback whale, and leatherback sea turtle. The preliminary determination for the activity is may affect, not likely to adversely affect for listed chinook salmon, bull trout and bald eagles and no effect for listed marbled murrelet, steller sea lion, humpback whale, and leatherback sea turtle. Informal consultation under Section 7 of the Act will be required.

ESSENTIAL FISH HABITAT - The Magnuson-Stevens Fishery Conservation and Management Act (MSA), as amended by the Sustainable Fisheries Act of 1996, requires all Federal agencies to consult with the National Marine Fisheries Service (NMFS) on all actions, or proposed actions, permitted, funded, or undertaken by the agency, that may adversely affect Essential Fish Habitat (EFH). EFH for Pacific salmon, groundfish, coastal pelagic species occurs in the project area. The proposed action would impact approximately 4.6 acres of EFH for these species.

If the Corps determines that the proposed action may adversely affect EFH for federally-managed fisheries in Washington waters, the Corps will initiate EFH consultation with the NMFS. The Corps' final determination relative to project impacts and the need for mitigation measures is subject to review by and coordination with the NMFS.

CULTURAL RESOURCES - The District Engineer has reviewed the latest published version of the National Register of Historic Places, lists of properties determined eligible and other sources of information. The following is current knowledge of the presence or absence of historic properties and the effects of the undertaking upon these properties:

> Known historic properties occur in the vicinity of the proposed project. However, they do not occur in the permit area. The proposed work is of such a limited nature and extent and the marina basin has been so extensively modified by modern development that little likelihood exists for the proposed project to impinge upon an undisturbed historic property.

The District Engineer invites responses to this public notice from Federal, State, and local agencies, historical and archeological societies, Indian tribes, and other parties likely to have knowledge of or concerns with historic properties in the area.

PUBLIC HEARING - Any person may request, in writing, within the comment period specified in this notice, that a public hearing be held to consider this application. Requests for public hearings shall state, with particularity, the reasons for holding a public hearing.

EVALUATION - The decision whether to issue a permit will be based on an evaluation of the probable impact, including cumulative impacts of the proposed activity on the public interest. That decision will reflect the national concern for both protection and utilization of important resources. The benefits which reasonably may be expected to accrue from the proposal must be balanced against its reasonably foreseeable detriments. All factors which may be relevant to the proposal will be considered, including the cumulative effects thereof; among those are conservation, economics, aesthetics, general environmental concerns, wetlands, historic properties, fish and wildlife values, flood hazards, floodplain values, land use, navigation, shoreline erosion and accretion, recreation, water supply and conservation, water quality, energy needs, safety, food and fiber production, mineral needs, considerations of property ownership, and, in general, the needs and welfare of the people.

The Corps is soliciting comments from the public; Federal, State, and local agencies and officials; Indian tribes; and other interested parties in order to consider and evaluate the impacts of this activity. Any comments received will be considered by the Corps to determine whether to issue, modify, condition or deny a permit for the work. To make this decision, comments are used to assess impacts on endangered species, historic properties, water quality, general environmental effects, and the other public interest factors listed above. Comments are used in the preparation of an Environmental Assessment and/or an Environmental Impact Statement pursuant to the National Environmental Policy Act. Comments are also used to determine the need for a public hearing and to determine the overall public interest of the activity.

The evaluation of the impact of the activity on the public interest will include application of the guidelines promulgated by the Administrator, Environmental Protection Agency, under authority of Section 404(b) of the Clean Water Act. This evaluation will include an alternatives analysis.

ADDITIONAL EVALUATION - The State of Washington is reviewing this work for consistency with the approved Washington Coastal Zone Management Program and for compliance with the applicable State and Federal water quality standards pursuant to Section 401 of the Clean Water Act.

This proposal is the subject of Shorelines Exemption application, being processed by the City of Anacortes.

COMMENT AND REVIEW PERIOD - Conventional mail or e-mail comments on this public notice will be accepted and made part of the record and will be considered in determining whether it would be in the public interest to authorize this proposal. In order to be accepted, e-mail comments must originate from the author's e-mail account and must include on the subject line of the e-mail message the permit applicant's name and reference number as shown below. All e-mail comments should be sent to Randel.J.Perry@nws02.usace.army.mil. Conventional mail comments should be sent ATTN: Regulatory Branch. Both conventional mail or e-mail comments must include the permit applicant's name and reference number, as shown below, and the commentor's name, address, and phone number. All comments whether conventional mail or e-mail must reach this office, no later than the expiration date of this public notice to ensure consideration. Please include the following name and reference number:

Anchor Cove Marina Condominium Association
200400104

Encl
Drawings (7)

ANCHOR COVE MARINA CONDO ASSN
10-YEAR MAINTENANCE DREDGE PLAN

COE REF# 200400104
DOE AERIAL, 2001

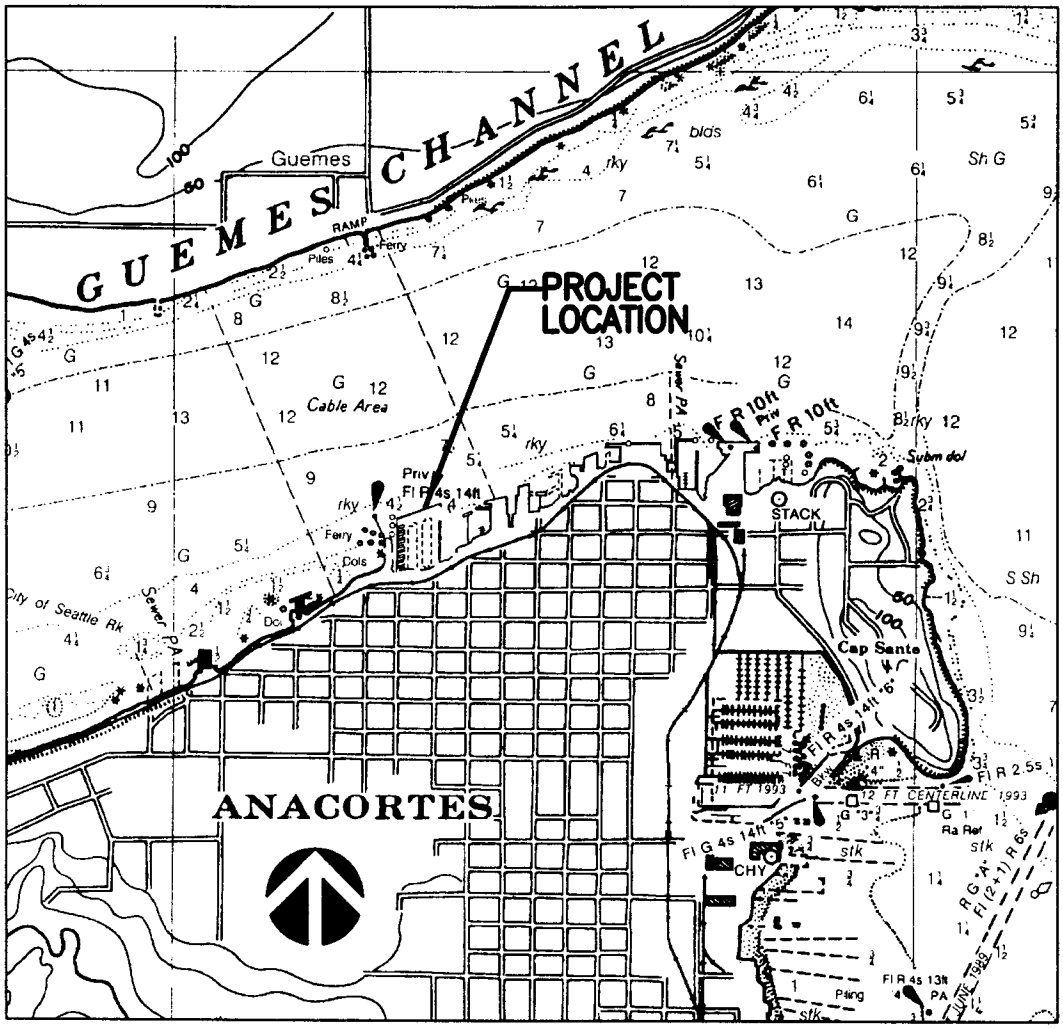

SOURCE: NOAA CHART NO. 18427

VICINITY MAP

SECTION 10
TWN 35N
RANGE 1E

NAUTICAL MILE

0 1/2 1

1000 500 0 1000 2000

COE Ref. # 200400104

PROPOSED MAINTENANCE DREDGING
IN: GUEMES CHANNEL
AT: ANACORTES
COUNTY: SKAGIT
STATE: WASHINGTON
APPL. BY: ANCHOR COVE MARINA
SHEET: 1 OF 7 DATE: 01/12/2004
REV: 1/30/2004

PROJECT LOCATION: GUEMES CHANNEL
ANACORTES, WASHINGTON

LAT = 48°31'09"

LONG = 122°37'19"

PURPOSE: PROPOSED MAINTENANCE DREDGING

DATUM: MLLW=0.00'

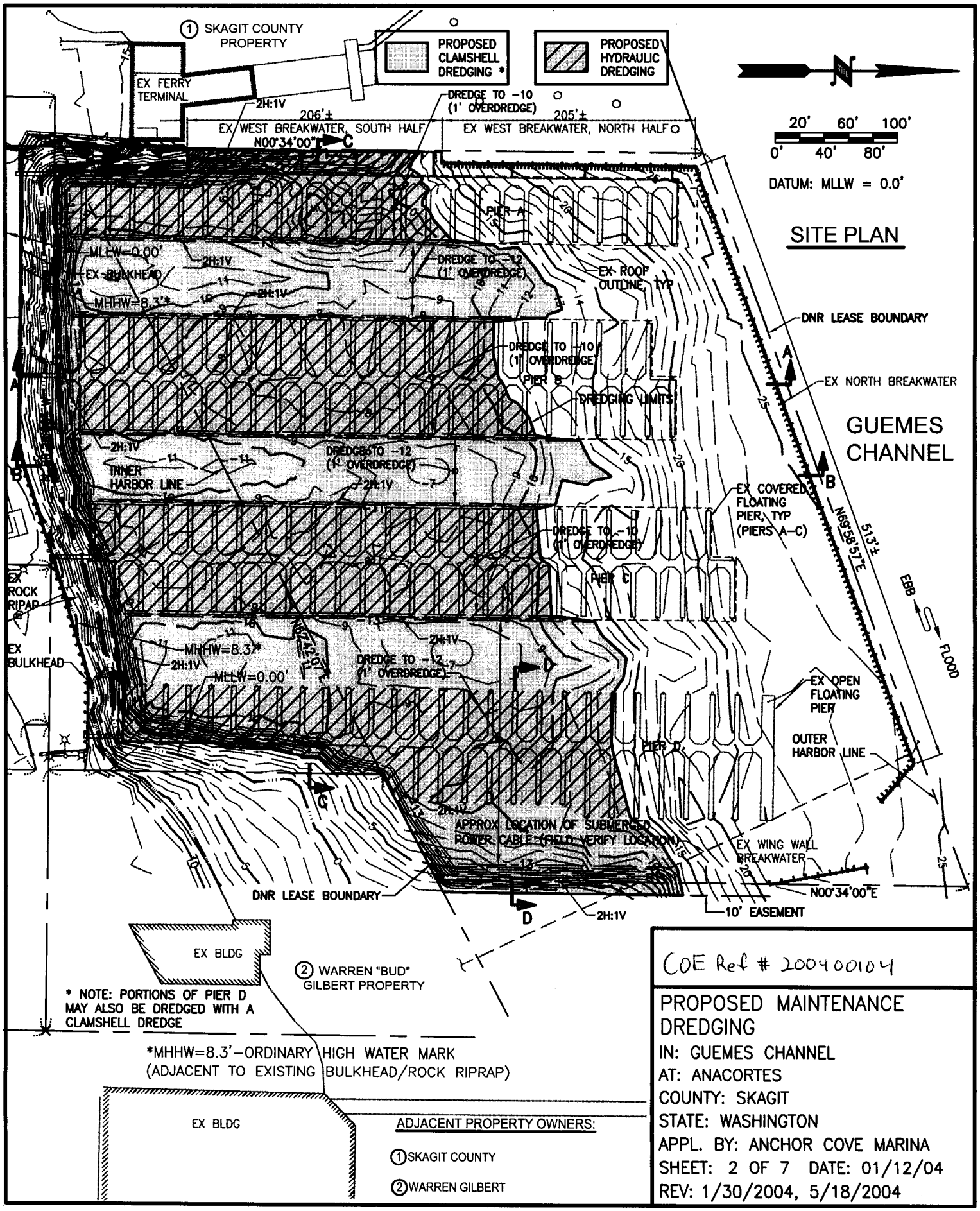

COE Ref # 200400104

PROPOSED MAINTENANCE DREDGING
IN: GUEMES CHANNEL
AT: ANACORTES
COUNTY: SKAGIT
STATE: WASHINGTON
APPL. BY: ANCHOR COVE MARINA
SHEET: 2 OF 7 DATE: 01/12/04
REV: 1/30/2004, 5/18/2004

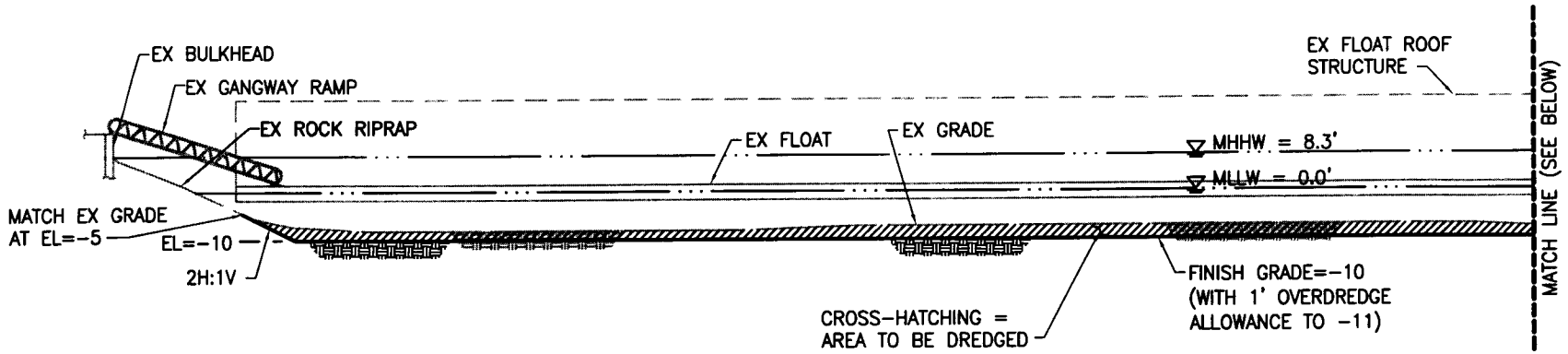

NOTE: MHW=7.5'

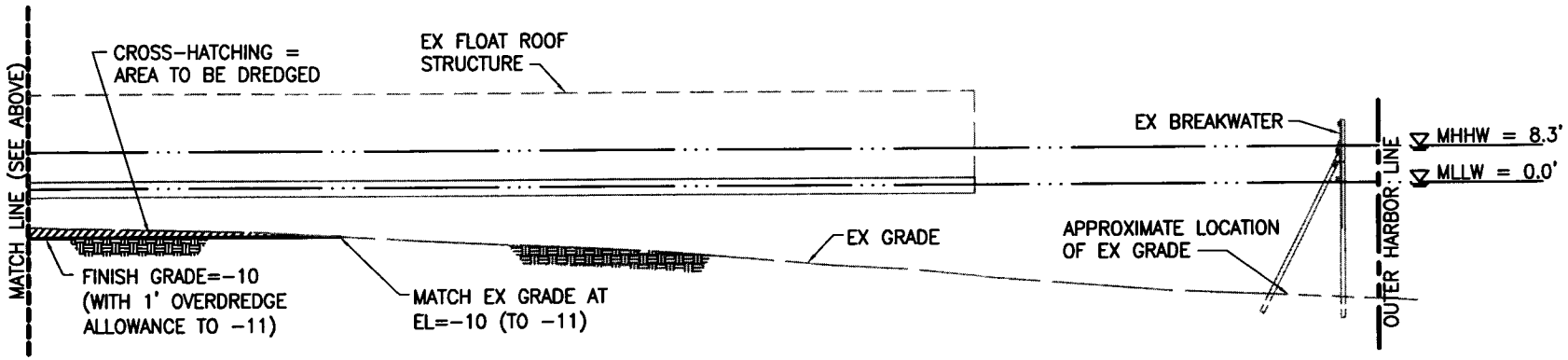

SECTION A-A

TYPICAL DREDGE SECTION
UNDER COVERED MOORAGE

10' 30'
0' 20' 40'
SCALE: 1"=40'

COE Ref # 2004001104

PROPOSED MAINTENANCE DREDGING
IN: GUEMES CHANNEL
AT: ANACORTES
COUNTY: SKAGIT
STATE: WASHINGTON
APPL. BY: ANCHOR COVE MARINA
SHEET: 3 OF 7 DATE: 01/12/2004
REV: 1/30/2004

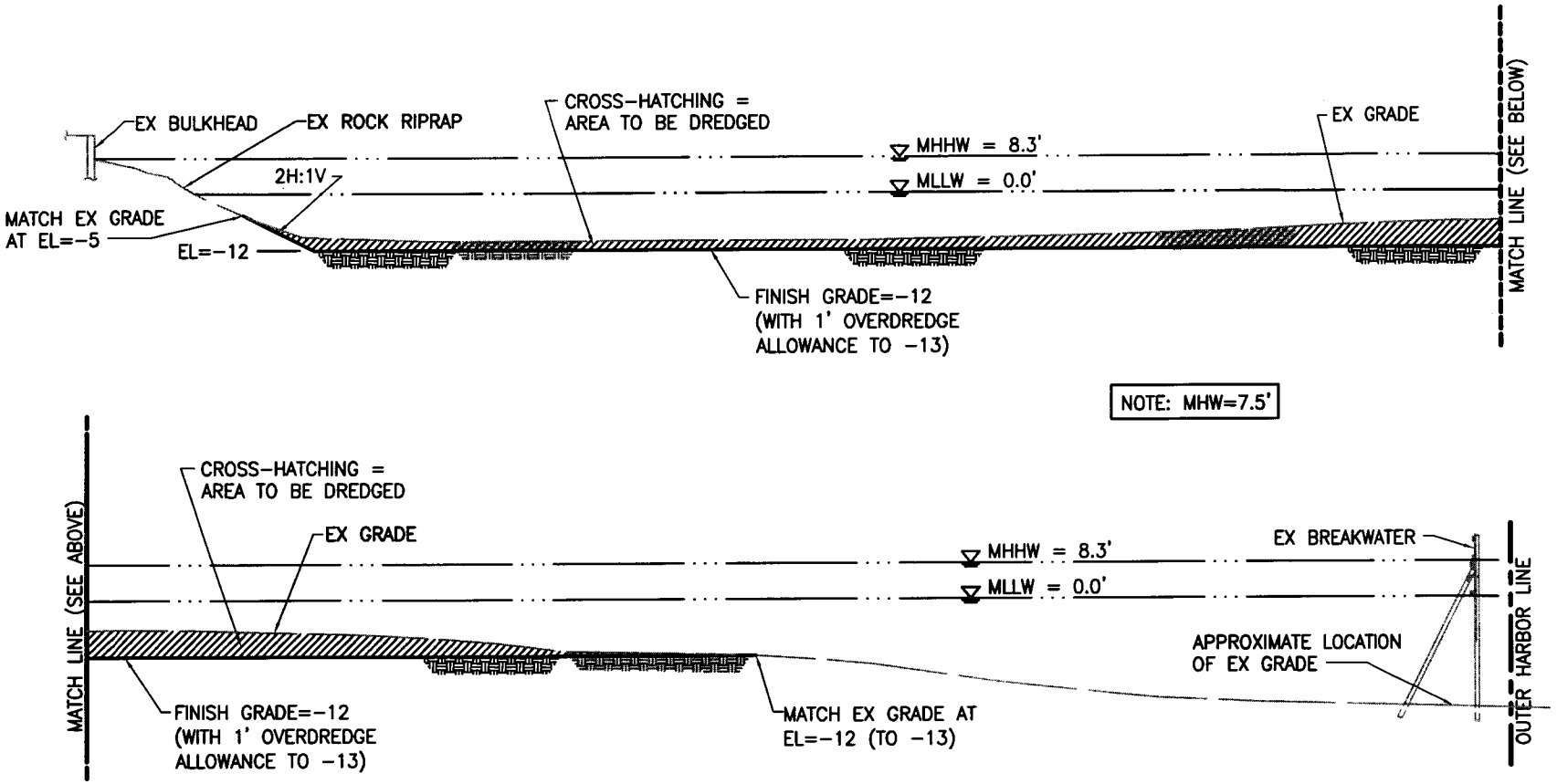

SECTION B-B

TYPICAL DREDGE SECTION FOR FAIRWAYS AND OPEN MOORAGE

10' 30'
0' 20' 40'

SCALE: 1"=40'

COE Ref. # 2004-00104

PROPOSED MAINTENANCE DREDGING
IN: GUEMES CHANNEL
AT: ANACORTES
COUNTY: SKAGIT
STATE: WASHINGTON
APPL. BY: ANCHOR COVE MARINA
SHEET: 4 OF 7 DATE: 01/12/2004
REV: 1/30/2004

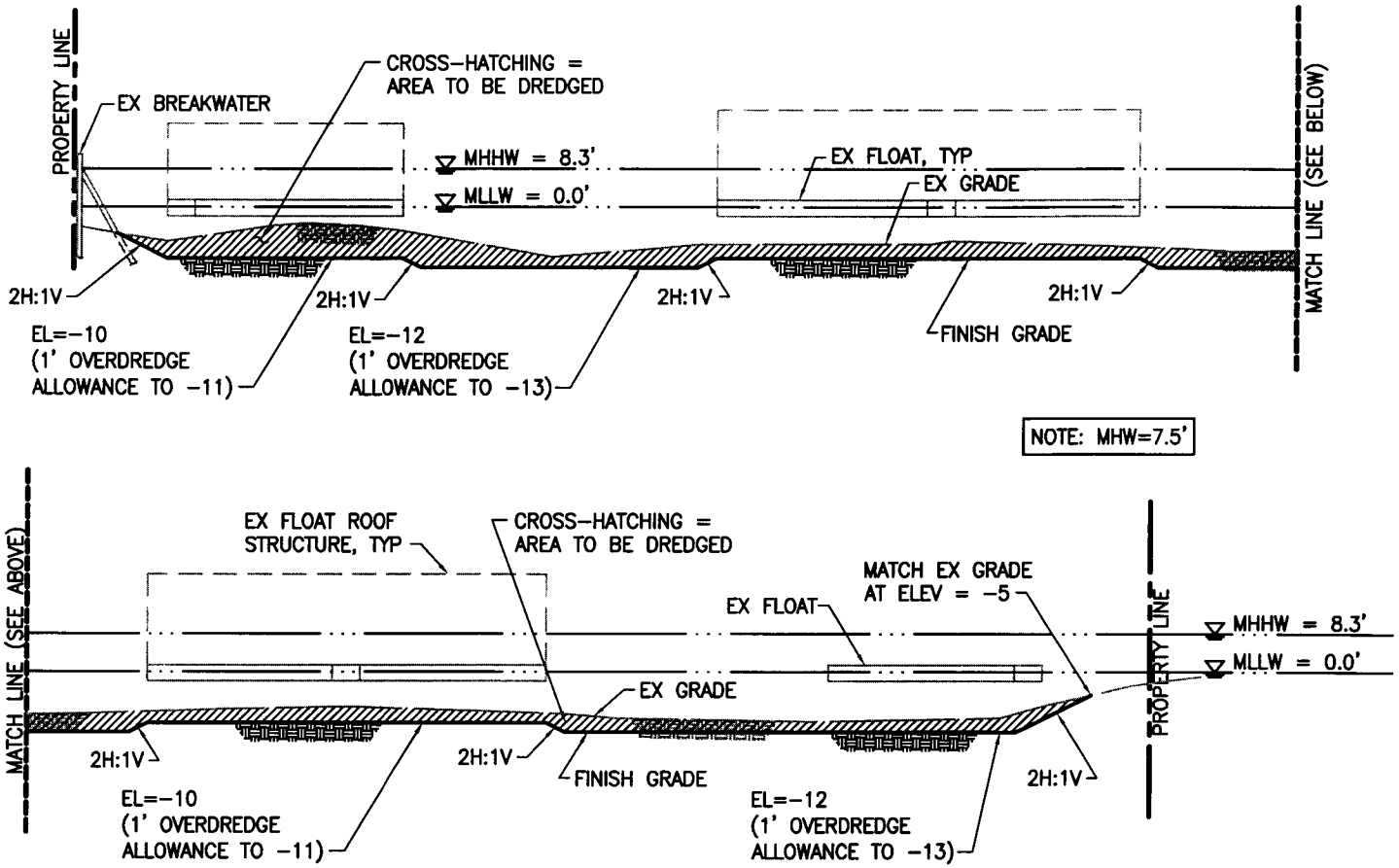

SECTION C-C

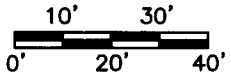

SCALE: 1"=40'

COE Ref.# 200400104

PROPOSED MAINTENANCE DREDGING
IN: GUEMES CHANNEL
AT: ANACORTES
COUNTY: SKAGIT
STATE: WASHINGTON
APPL. BY: ANCHOR COVE MARINA
SHEET: 5 OF 7 DATE: 01/12/2004
REV: 1/30/2004

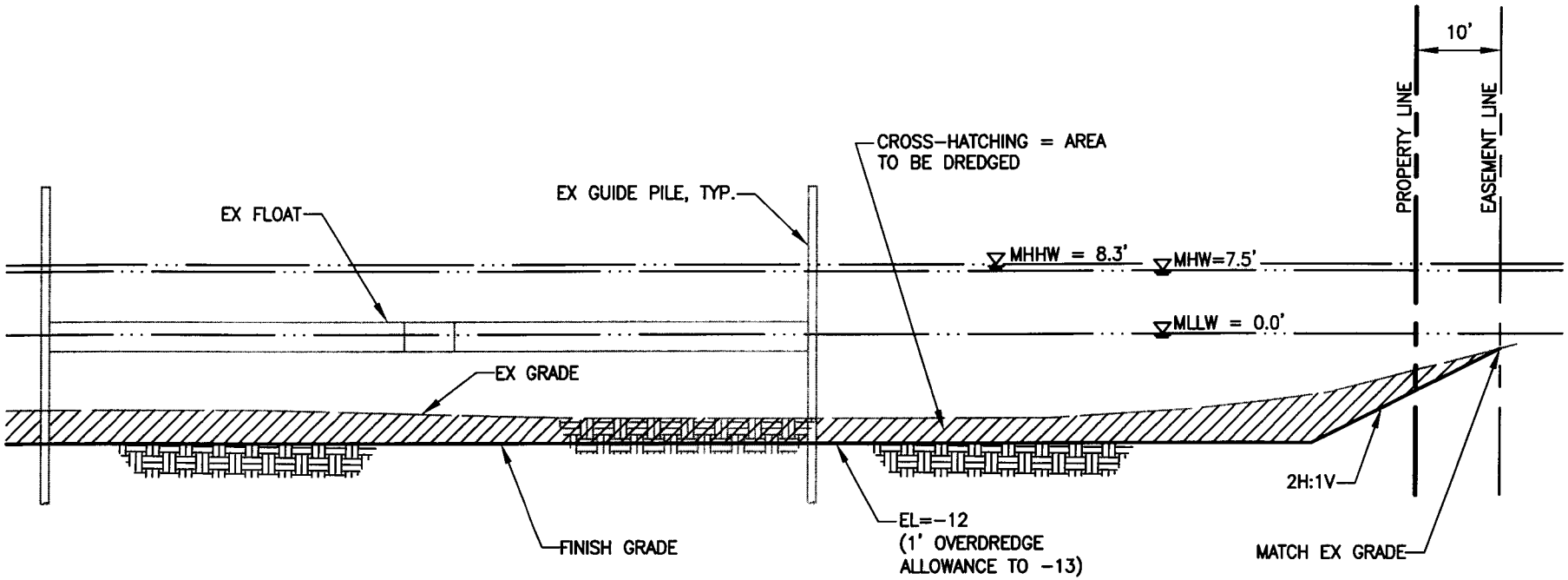

SECTION D-D

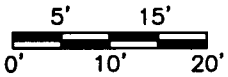

SCALE: 1"=20'

COE Ref. # 2004 00104

PROPOSED MAINTENANCE
DREDGING
IN: GUEMES CHANNEL
AT: ANACORTES
COUNTY: SKAGIT
STATE: WASHINGTON
APPL. BY: ANCHOR COVE MARINA
SHEET: 6 OF 7 DATE: 01/12/2004
REV: 1/30/2004

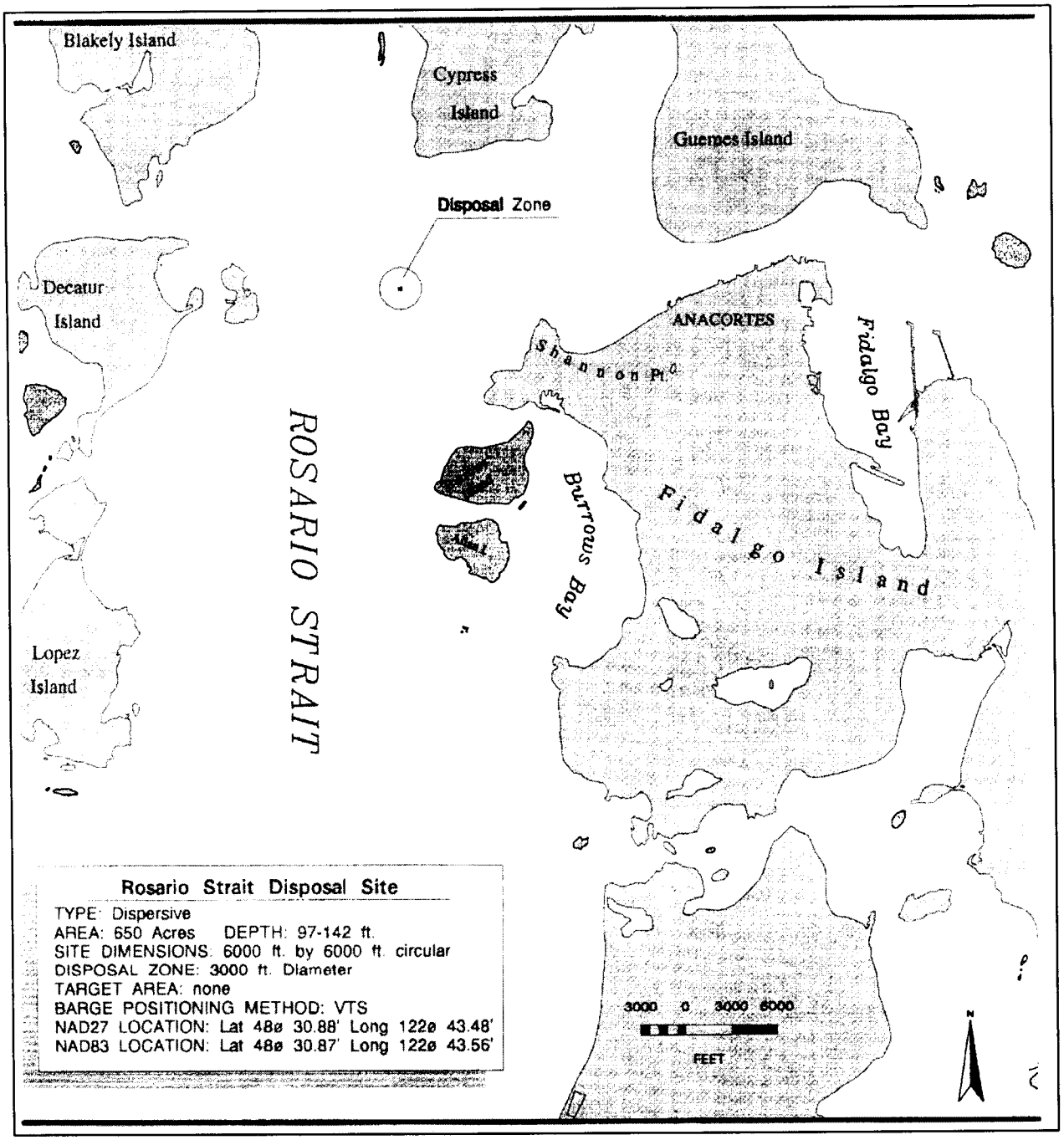

DISPOSAL SITE

COE Ref.# 200400104

PROPOSED MAINTENANCE DREDGING
IN: GUEMES CHANNEL
AT: ANACORTES
COUNTY: SKAGIT
STATE: WASHINGTON
APPL. BY: ANCHOR COVE MARINA
SHEET: 7 OF 7 DATE: 01/12/2004
REV: 1/30/2004

STATE OF WASHINGTON
DEPARTMENT OF ECOLOGY
P.O. Box 47600 • Olympia, Washington 98504-7600
(360) 407-6000 • TDD Only (Hearing Impaired) (360) 407-6006

STATE OF WASHINGTON
DEPARTMENT OF ECOLOGY

Notice of Application for
Water Quality Certification
and for
Certification of Consistency with the
Washington Coastal Zone Management Program

Date: June 10, 2004

Notice is herby given that a request has been filed with the Department of Ecology, pursuant to the requirements of Section 401 of the federal Clean Water Act of 1977 (PL 95-217), to certify that the project described in the U.S. Army Corps of Engineers Public Notice No. 200400104 will comply with the Sections 301, 302, 303, 306, and 307 of the Act, and with applicable provisions of State and Federal water pollution control laws.

Notice is herby given that a request has been filed with the Department of Ecology, pursuant to the requirements of Section 307© of the Federal Coastal Zone Management Act of 1972 (16 U.S.C. 1451), to certify that the above referenced project will comply with the Washington State Coastal Zone Management Program and that the project will be conducted in a manner consistent with that program.

Any person desiring to present views on the project pertaining to the project on either or both (1) compliance with water pollution control laws or (2) the project's compliance or consistency with the Washington State Coastal Zone Management Program may do so by providing written comments within 30 days of the above publication date to:

Federal Permit Coordinator
Department of Ecology
SEA Program
Post Office Box 47600
Olympia, Washington 98504-7600