US Army Corps
of Engineers
Seattle District

Public Notice of Application for Permit

Regulatory Branch
Post Office Box 3755
Seattle, Washington 98124-3755
Telephone (360) 750-9046
Ron Klump, Project Manager

Public Notice Date: September 28, 2004
Expiration Date: October 28, 2004
Reference: 200400143
Name: Vancouver Clark Parks and Recreation

Interested parties are hereby notified that an application has been received for a Department of the Army permit in accordance with Section 10 of the Rivers and Harbors Act of March 3, 1899, and Section 404 of the Clean Water Act for certain work described below and shown on the enclosed drawings.

APPLICANT - Vancouver-Clark Parks and Recreation Department
Post Office Box 1995
Vancouver, Washington 98668-1995
Douglas R. Hagedorn, L.A.
Telephone: (360) 619-1119

AGENT - The JD White Company
1111 Main Street, Suite 300
Vancouver, Washington 98660
Mr. Kent Snyder
Telephone: (360) 696-1338

LOCATION – In the Columbia River from river miles 122.7 to 123.8 at Washougal, Washington.

WORK – The proposed project would construct various park structures that are waterward of the ordinary high water (OHW) line of the Columbia River. The OHW line elevation is 23 feet at the upstream end of the project. Work requiring a Department of the Army permit includes:

construct 1 - 12-foot by 140-foot fixed pier with 2, 080 sq. ft. of Duragrid steel grate decking with 20-foot by 20-foot scenic view point at end of pier, and drive 14 steel piles (Figure 9 of 25);

place 2 - 8-foot by 40-foot canoe/kayak finger floats, each with 320 sq. ft of Duragrid steel grate decking and drive 4 steel piles (Figure 2 of 25);

place 1 – 8-foot by 40-foot observation float and a 20-foot by 20-foot hexagonal float both with Duragrid steel grate decking, drive a total of 3 steel piles, and place 2 buoys with 24-inch by 16-inch by 8-inch concrete anchors (Figure 2 of 25);

place 7 buoys with 24-inch by 16-inch by 8-inch concrete anchors at the swimming area (Figure 9 of 25);

place 3 – 2.5-foot by 30-foot by 1.5-foot Lewis and Clark canoe concrete replicas, 2 – 4-foot by 23-foot by 1.5-foot Chinookan canoe concrete replica, and 1 – 1.5-foot by 3.5-foot by 2-foot interpretive sign (Figure 9 of 25);

place 1 – 2.5-foot by 30-foot by 1.5-foot Lewis and Clark canoe concrete replica, 1 – 4-foot by 23-foot by 1.5-foot Chinookan canoe concrete replica, and 5 – 3-foot by 3-foot by 1.5' concrete animal sculptures (Figure 9 of 25 – in the Children's Activity Area);

place gravel on existing 10-foot by 3,300-foot dirt/sand pathways. Affected area is 0.76 of an acre involving 403 cubic yards (Figures 9, 10, 13, 15, and 23 of 25) of fill.

resurface existing 10-foot by 343-foot gravel trail. Affected area is 0.08 of an acre involving 42 cubic yards (Figures 8, 10, and 23 of 25) of fill.

construct/place 6 picnic tables each on a 183 square foot concrete slab and footings totaling 1, 098 square feet of slab area and 4 cubic yards of concrete (Figures 9 and 10 of 25).

place 6 – 4-foot by 8-foot gravel paths from gravel trail to the 6 picnic tables totaling 192 square feet of trail area and 4 cubic yards of gravel (Figures 9 and 10 of 25).

place 5-foot by 310-foot bark mulch trail totaling an area of 0.04 of an acre and 19 cubic yards of bark mulch (Figures 9 and 10 of 25).

construct/place 2 – 30-foot by 35-foot open sided picnic shelters on 34-foot by 35-foot concrete slabs and 4 concrete footings (per shelter) totaling 2,430 square feet of area and 62 cubic yards of gravel (Figures 8 and 10 of 25).

place 1,575 lineal feet of water line in a trench 3-foot wide by 4-foot deep and restore grade to original contours (Figures 8, 9, 10, 13, and 15 of 25).

place 665 lineal feet of sewer line in a trench 3-foot by 4-foot deep and restore grade to original contours (Figures 8, 9, 10, 13, and 15 of 25).

place 665 lineal feet of electrical line in a trench 2-foot wide by 3-foot deep and restore grade to original contours (Figures 8, 9, 10, 13, and 15 of 25).

PURPOSE – To provide recreational, interpretive, and environmental opportunities.

ADDITIONAL INFORMATION – The project site consists of approximately 80 acres along the Columbia River shoreline. The site is mostly undeveloped and consists of a mix of riparian forest dominated by cottonwood and open short-grass areas. The site has historically received recreational use from both day use and overnight camping. The majority of the site sits on a linear terrace between a levee and permanent water of the Columbia River. The terrace is dry much of the year but is just below the plane of ordinary high water.

Additional work, especially in areas on or behind the levee would occur landward of the OHW line and is not subject to a Department of the Army permit. This work may be shown on the enclosed drawings and includes additional trails, interpretive signs, restrooms and parking areas.

ENDANGERED SPECIES - The Endangered Species Act (ESA) of 1973, as amended, requires assessment of potential impacts to listed and proposed species. The Bradshaw's desert parsley (*Lomatium bradshawii*), endangered; Water howellia (*Howellia aquatilis*), threatened; Bald eagle (*Haliaeetus leucocephalus*) threatened;

Columbia River bull trout (*Salvelinus confluentus*), threatened; Lower Columbia River chinook (*Oncorhynchus tshawytscha*), threatened; Upper Columbia River spring chinook (*Oncorhynchus tshawytscha*), endangered; Snake River fall chinook (*Oncorhynchus tshawytscha*), threatened; Snake River spring/summer chinook (*Oncorhynchus tshawytscha*), threatened; Columbia River chum (*Oncorhynchus keta*), threatened; Snake River sockeye (*Oncorhynchus nerka*), endangered; Lower Columbia River steelhead (*Oncorhynchus mykiss*), threatened; Middle Columbia River steelhead (*Oncorhynchus mykiss*), threatened; Upper Columbia River steelhead (*Oncorhynchus mykiss*), endangered; and Snake River steelhead (*Oncorhynchus mykiss*), threatened in the state of Washington, may occur in the proposed project area. For the Snake River fall chinook, the Snake River spring/summer chinook, and the Snake River sockeye critical habitat has been designated. After receipt of comments from this public notice, the U.S. Army Corps of Engineers will evaluate the potential impacts to the above species.

ESSENTIAL FISH HABITAT - The Magnuson-Stevens Fishery Conservation and Management Act (MSA), as amended by the Sustainable Fisheries Act of 1996, requires all Federal agencies to consult with the National Marine Fisheries Service (NMFS) on all actions, or proposed actions, permitted, funded, or undertaken by the agency, that may adversely affect Essential Fish Habitat (EFH). EFH for Pacific salmon occurs in the project area. The proposed action would impact approximately 1.04 acres of EFH for these species.

If the Corps determines that the proposed action may adversely affect EFH for federally-managed fisheries in Washington waters, the Corps will initiate EFH consultation with the NMFS. The Corps' final determination relative to project impacts and the need for mitigation measures is subject to review by and coordination with the NMFS.

CULTURAL RESOURCES - The District Engineer has reviewed the latest published version of the National Register of Historic Places, lists of properties determined eligible and other sources of information. The following is current knowledge of the presence or absence of historic properties and the effects of the undertaking upon these properties:

An historic properties investigation has been conducted within the permit area. No sites determined eligible for or listed on the National Register of Historic Places were found to exist within the permit area.

The District Engineer invites responses to this public notice from Federal, Native American Nations or tribal governments, State, and local agencies, historical and archeological societies, and other parties likely to have knowledge of or concerns with historic properties in the area.

PUBLIC HEARING - Any person may request, in writing, within the comment period specified in this notice, that a public hearing be held to consider this application. Requests for public hearings shall state, with particularity, the reasons for holding a public hearing.

EVALUATION - The decision whether to issue a permit will be based on an evaluation of the probable impact, including cumulative impacts of the proposed activity on the public interest. That decision will reflect the national concern for both protection and utilization of important resources. The benefits which reasonably may be expected to accrue from the proposal must be balanced against its reasonably foreseeable detriments. All factors which may be relevant to the proposal will be considered, including the cumulative effects thereof; among those are conservation, economics, aesthetics, general environmental concerns, wetlands, historic properties, fish and wildlife values, flood hazards, floodplain values, land use, navigation, shoreline erosion and accretion, recreation, water supply and conservation, water quality, energy needs, safety, food and fiber production, mineral needs, considerations of property ownership, and, in general, the needs and welfare of the people.

The U.S. Army Corps of Engineers (Corps) is soliciting comments from the public; Federal, Native American Nations or tribal governments, State, and local agencies and officials; and other interested parties in order to consider and evaluate the impacts of this activity. Any comments received will be considered by the Corps to determine whether to issue, modify, condition or deny a permit for the work. To make this decision, comments are used to assess impacts on endangered species, historic properties, water quality, general environmental effects, and the other public interest factors listed above. Comments are used in the preparation of an Environmental Assessment and/or an Environmental Impact Statement pursuant to the National Environmental Policy Act. Comments are also used to determine the need for a public hearing and to determine the overall public interest of the activity.

ADDITIONAL EVALUATION - The State of Washington is reviewing this work for compliance with the applicable State and Federal water quality standards pursuant to Section 401 of the Clean Water Act.

COMMENT AND REVIEW PERIOD – Conventional mail or e-mail comments on this public notice will be accepted and made part of the record and will be considered in determining whether it would be in the public interest to authorize this proposal. In order to be accepted, e-mail comments must originate from the author's e-mail account and must include on the subject line of the e-mail message the permit applicant's name and reference number as shown below. All e-mail comments should be sent to Ron.Klump@nws02.usace.army.mil. Conventional mail comments should be sent to U.S. Army Corps of Engineers, Regulatory Branch, Post Office Box 3755, Seattle, Washington 98124-3755. Both conventional mail or e-mail comments must include the permit applicant's name and reference number, as shown below, and the commentor's name, address, and phone number. All comments whether conventional mail or email must reach this office, no later than the expiration date of this public notice to ensure consideration. Please include the following name and reference number:

Vancouver-Clark Parks and Recreation,
200400143

Encl
Drawings (25)

VANCOUVER - CLARK PARKS AND RECREATION DEPARTMENT
AT COTTONWOOD BEACH, PHASE I
CAPTAIN WILLIAM CLARK PARK
T1N, R4E, S16

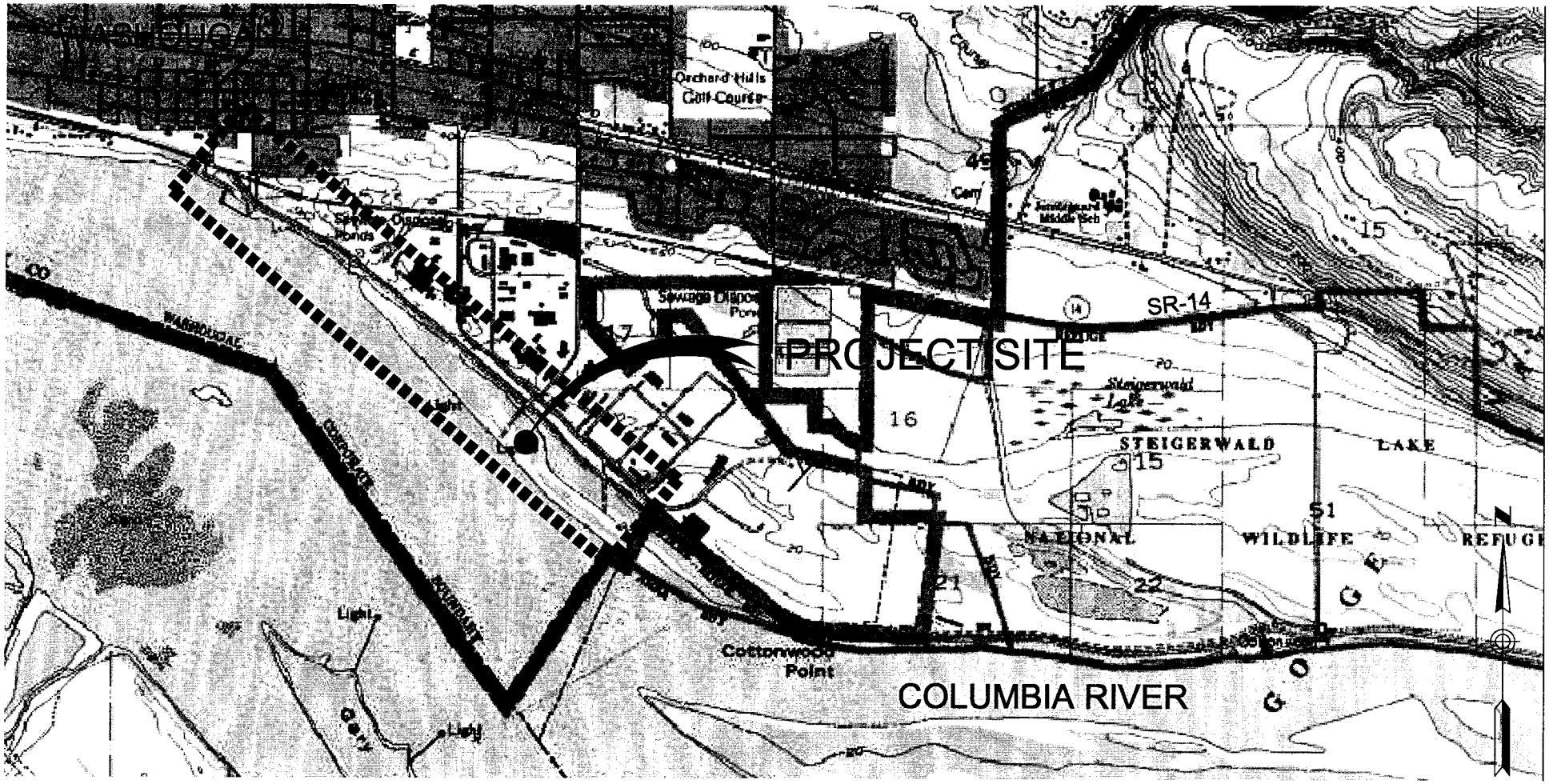

PURPOSE: TO CONSTRUCT AND IMPROVE A RIVERFRONT PUBLIC PARK

DATUM: NGVD 29-47
LAT: 45°33'58" LON: -122°20'25"

ADJACENT PROPERTY OWNERS:
LIST IN CORPS FILE

VICINITY MAP 200400143

VANCOUVER - CLARK PARKS AND RECREATION DEPARTMENT
CAPTAIN WILLIAM CLARK PARK AT COTTONWOOD BEACH, PHASE I

PROPOSED: CONSTRUCT NEW PARK FACILITIES INCLUDING TRAILS, RESTROOMS, CAMPING SITES, PICNIC SITES, FIXED AND FLOATING DOCKS

IN: CITY OF WASHOUGAL
AT: COLUMBIA RIVER MILE 123.2 TO 124.6, SEC 16, T1N, R4E
COUNTY OF: CLARK STATE: WA
APPLICATION BY: VANCOUVER - CLARK PARKS

FIGURE 1A OF 25 DATE: JULY 28, 2004

CAPT. WILLIAM CLARK PARK AT COTTONWOOD BEACH, PHASE I - PERMIT APPLICATION COE No.

CAPT. WILLIAM CLARK PARK AT COTTONWOOD BEACH, PHASE I - PERMIT APPLICATION COE No.

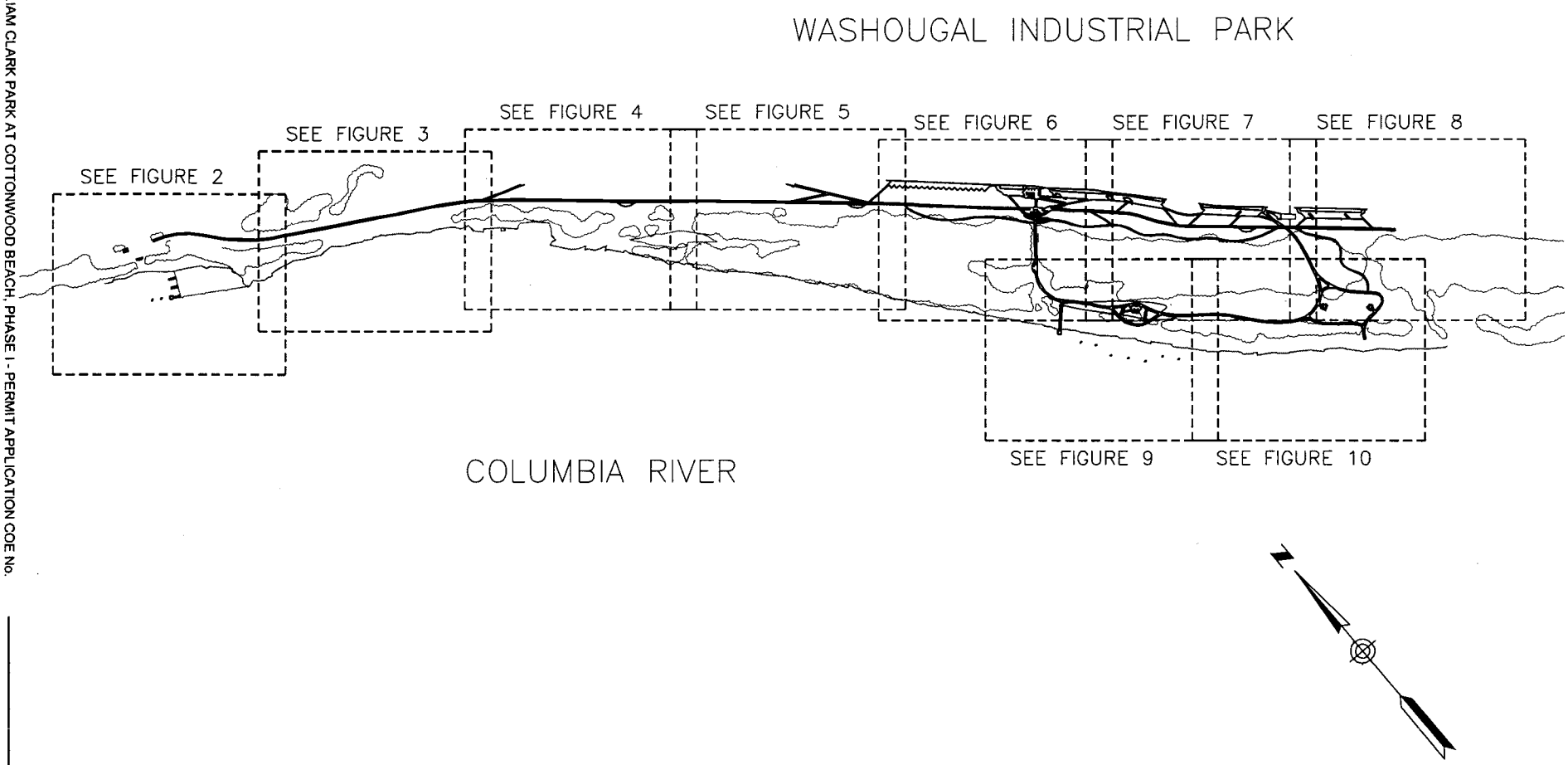

PURPOSE: TO CONSTRUCT AND IMPROVE A RIVERFRONT PUBLIC PARK

DATUM: NGVD 29-47
LAT: 45°33'58" LON: -122°20'25"

ADJACENT PROPERTY OWNERS:

SHEET INDEX MAP

VANCOUVER - CLARK PARKS AND RECREATION DEPARTMENT
CAPTAIN WILLIAM CLARK PARK AT COTTONWOOD BEACH, PHASE I

PROPOSED: CONSTRUCT NEW PARK FACILITIES INCLUDING TRAILS, RESTROOMS, CAMPING SITES, PICNIC SITES, FIXED AND FLOATING DOCKS

IN: CITY OF WASHOUGAL
AT: COLUMBIA RIVER MILE 123.2 TO 124.8, SEC 16, T1N, R4E
COUNTY OF: CLARK STATE: WA
APPLICATION BY: VANCOUVER - CLARK PARKS

FIGURE 1B OF 25 DATE: JULY 28, 2004

File Name: D:\Data\TWC\CLIENTS\Vanc-Clark Parks\Cottonwood Beach Phase 1\Autocad\April 2004 revisions\Revised Permit Set for Corp 072104\Index map.dwg

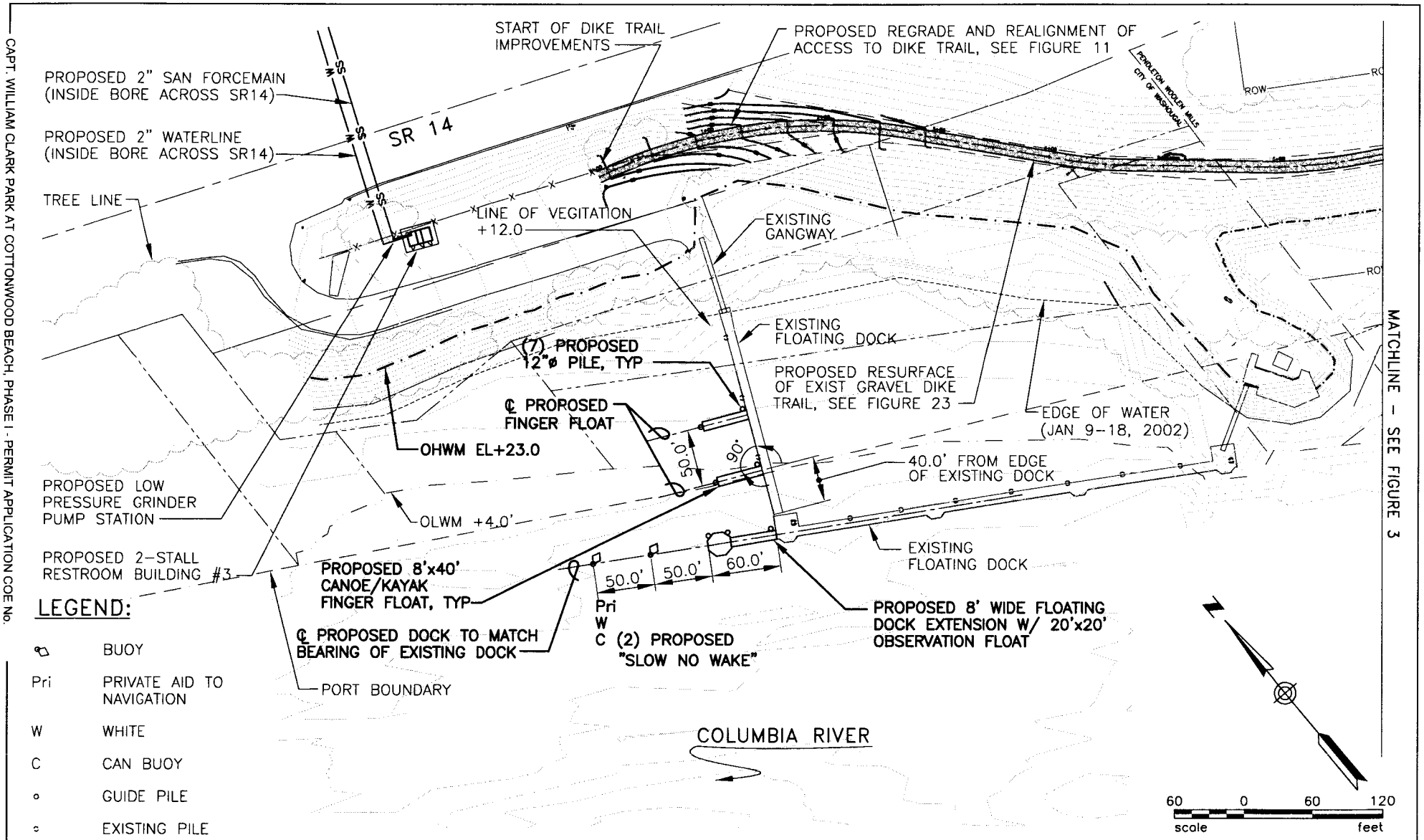

CAPT. WILLIAM CLARK PARK AT COTTONWOOD BEACH, PHASE I - PERMIT APPLICATION COE No.

PURPOSE: TO CONSTRUCT AND IMPROVE A RIVERFRONT PUBLIC PARK

DATUM: NGVD 29-47
LAT: 45°33'58" LON: -122°20'25"

ADJACENT PROPERTY OWNERS:

PLAN VIEW - 1 200400143

VANCOUVER - CLARK PARKS AND RECREATION DEPARTMENT
CAPTAIN WILLIAM CLARK PARK AT COTTONWOOD BEACH, PHASE I

PROPOSED: CONSTRUCT NEW PARK FACILITIES INCLUDING TRAILS, RESTROOMS, CAMPING SITES, PICNIC SITES, FIXED AND FLOATING DOCKS

IN: CITY OF WASHOUGAL
AT: COLUMBIA RIVER MILE 123.2 TO 124.6, SEC 16, T1N, R4E
COUNTY OF: CLARK STATE: WA
APPLICATION BY: VANCOUVER - CLARK PARKS

FIGURE 2 OF 25 DATE: JULY 28, 2004

File Name: O:\Data\PWC\CLIENTS\Vanc-Clark Parks\Cottonwood Beach Phase 1\Autocad\April 2004 revisions\Revised Permit Set for Corp 072104/sheet2.dwg

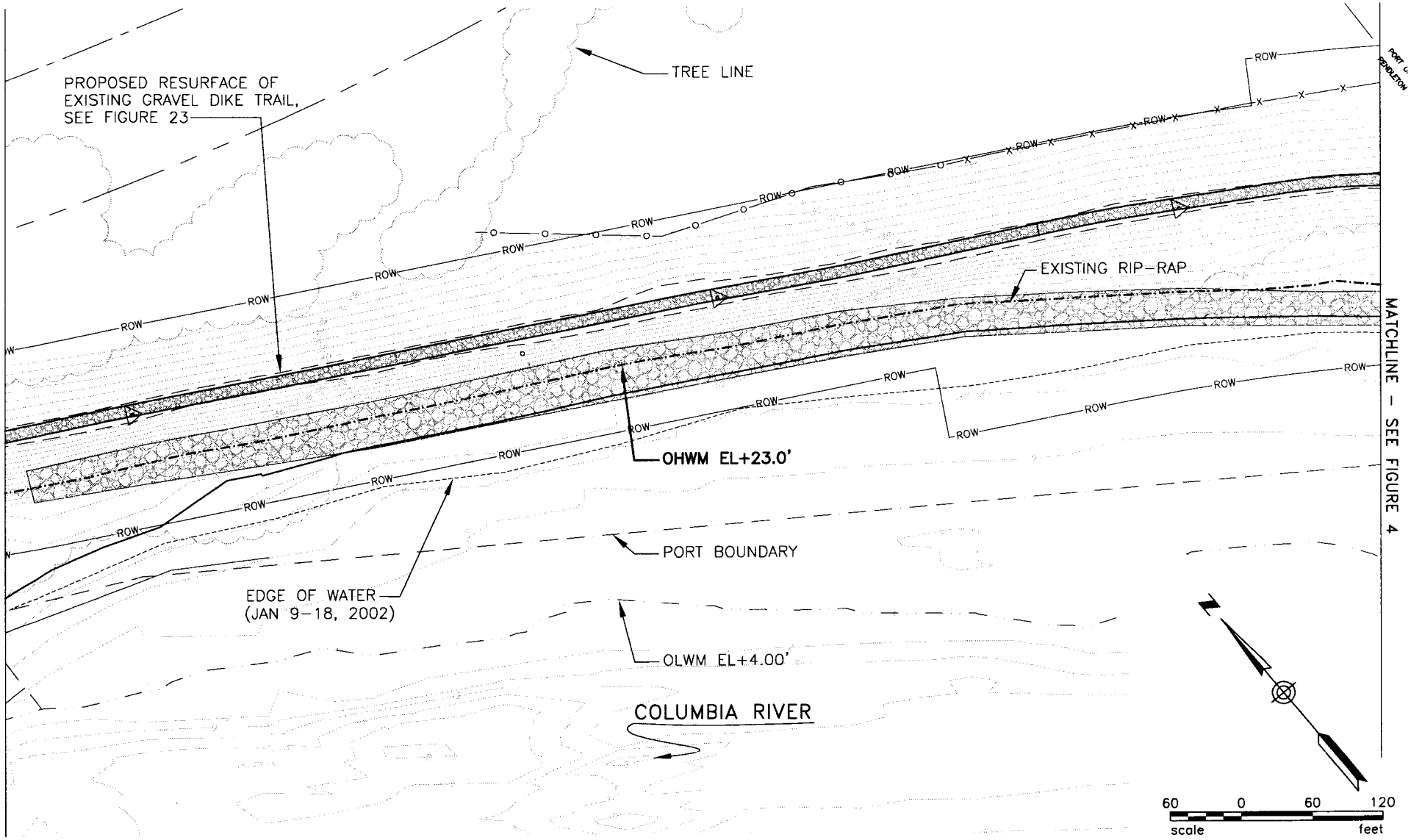

PURPOSE: TO CONSTRUCT AND IMPROVE A RIVERFRONT PUBLIC PARK

DATUM: NGVD 29-47
LAT: 45°33'58" LON: -122°20'25"

ADJACENT PROPERTY OWNERS:

PLAN VIEW - 2 208408143

VANCOUVER - CLARK PARKS AND RECREATION DEPARTMENT
CAPTAIN WILLIAM CLARK PARK AT COTTONWOOD BEACH, PHASE I

PROPOSED: CONSTRUCT NEW PARK FACILITIES INCLUDING TRAILS, RESTROOMS, CAMPING SITES, PICNIC SITES, FIXED AND FLOATING DOCKS

IN: CITY OF WASHOUGAL
AT: COLUMBIA RIVER MILE 123.2 TO 124.6, SEC 16, T1N, R4E
COUNTY OF: CLARK STATE: WA
APPLICATION BY: VANCOUVER - CLARK PARKS

FIGURE 3 OF 25 DATE: JULY 28, 2004

CAPT. WILLIAM CLARK PARK AT COTTONWOOD BEACH, PHASE I - PERMIT APPLICATION COE No.

File Name: O:\Data\TWC\CLIENTS\Vanc-Clark Parks\Cottonwood Beach Phase 1\Autocad\April 2004 revisions\Revised Permit Set for Corp 072104/sheet3.dwg

MATCHLINE - SEE FIGURE 3

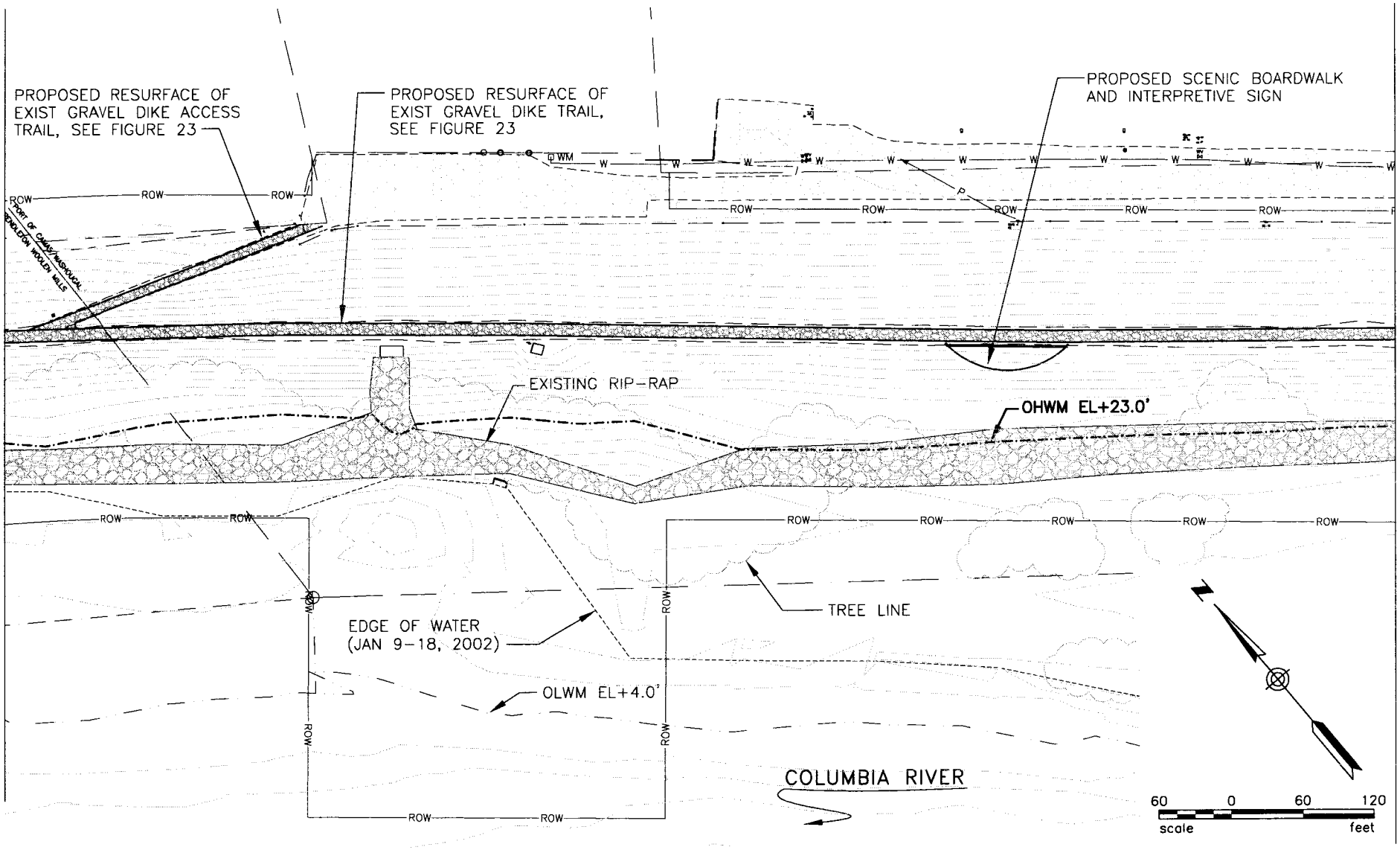

MATCHLINE - SEE FIGURE 5

PURPOSE: TO CONSTRUCT AND IMPROVE A RIVERFRONT PUBLIC PARK

DATUM: NGVD 29-47
LAT: 45°33'58" LON: -122°20'25"

ADJACENT PROPERTY OWNERS:

PLAN VIEW - 3

VANCOUVER - CLARK PARKS AND RECREATION DEPARTMENT
CAPTAIN WILLIAM CLARK PARK AT COTTONWOOD BEACH, PHASE I

PROPOSED: CONSTRUCT NEW PARK FACILITIES INCLUDING TRAILS, RESTROOMS, CAMPING SITES, PICNIC SITES, FIXED AND FLOATING DOCKS

IN: CITY OF WASHOUGAL
AT: COLUMBIA RIVER MILE 123.2 TO 124.6, SEC 16, T1N, R4E
COUNTY OF: CLARK STATE: WA
APPLICATION BY: VANCOUVER - CLARK PARKS

FIGURE 4 OF 25 DATE: JULY 28, 2004

File Name: O:\Data\TWC\CLIENTS\Vanc-Clark Parks\Cottonwood Beach Phase 1\Autocad\April 2004 revisions\Revised Permit Set for Corp 072104/sheet4.dwg

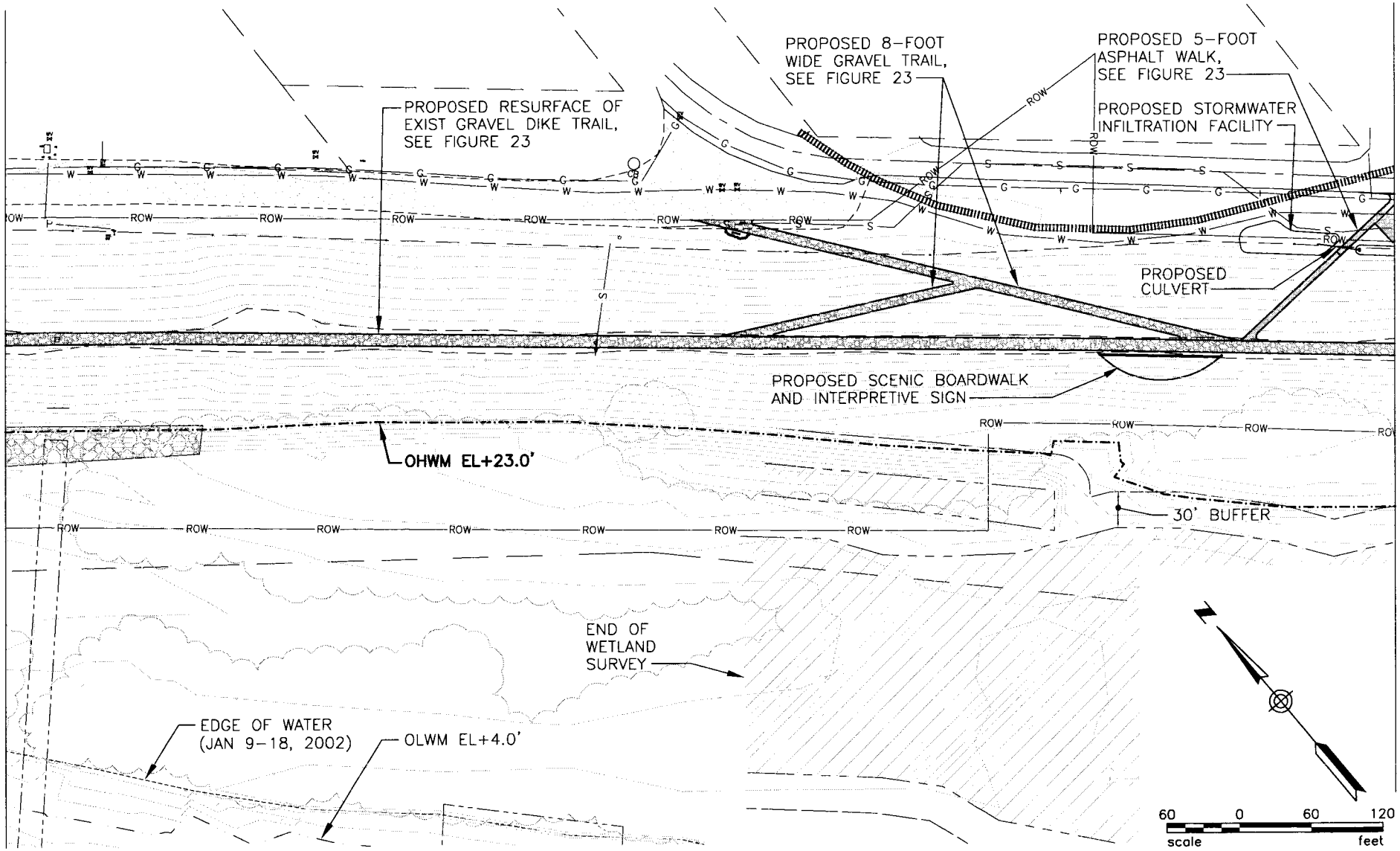

MATCHLINE - SEE FIGURE 4

MATCHLINE - SEE FIGURE 6

CAPT. WILLIAM CLARK PARK AT COTTONWOOD BEACH, PHASE I - PERMIT APPLICATION COE No.

PURPOSE: TO CONSTRUCT AND IMPROVE A RIVERFRONT PUBLIC PARK

DATUM: NGVD 29-47
LAT: 45°33'58" LON: -122°20'25"

ADJACENT PROPERTY OWNERS:

PLAN VIEW - 4

2004 00143

VANCOUVER - CLARK PARKS AND RECREATION DEPARTMENT
CAPTAIN WILLIAM CLARK PARK AT COTTONWOOD BEACH, PHASE I

PROPOSED: CONSTRUCT NEW PARK FACILITIES INCLUDING TRAILS, RESTROOMS, CAMPING SITES, PICNIC SITES, FIXED AND FLOATING DOCKS

IN: CITY OF WASHOUGAL
AT: COLUMBIA RIVER MILE 123.2 TO 124.6, SEC 16, T1N, R4E
COUNTY OF: CLARK STATE: WA
APPLICATION BY: VANCOUVER - CLARK PARKS

FIGURE 5 OF 25

DATE: JULY 28, 2004

File Name: O:\Data\TWC\CLIENTS\Vanc-Clark Parks\Cottonwood Beach Phase 1\Autocad\April 2004 revisions\Revised Permit Set for Corp 072104/sheet5.dwg

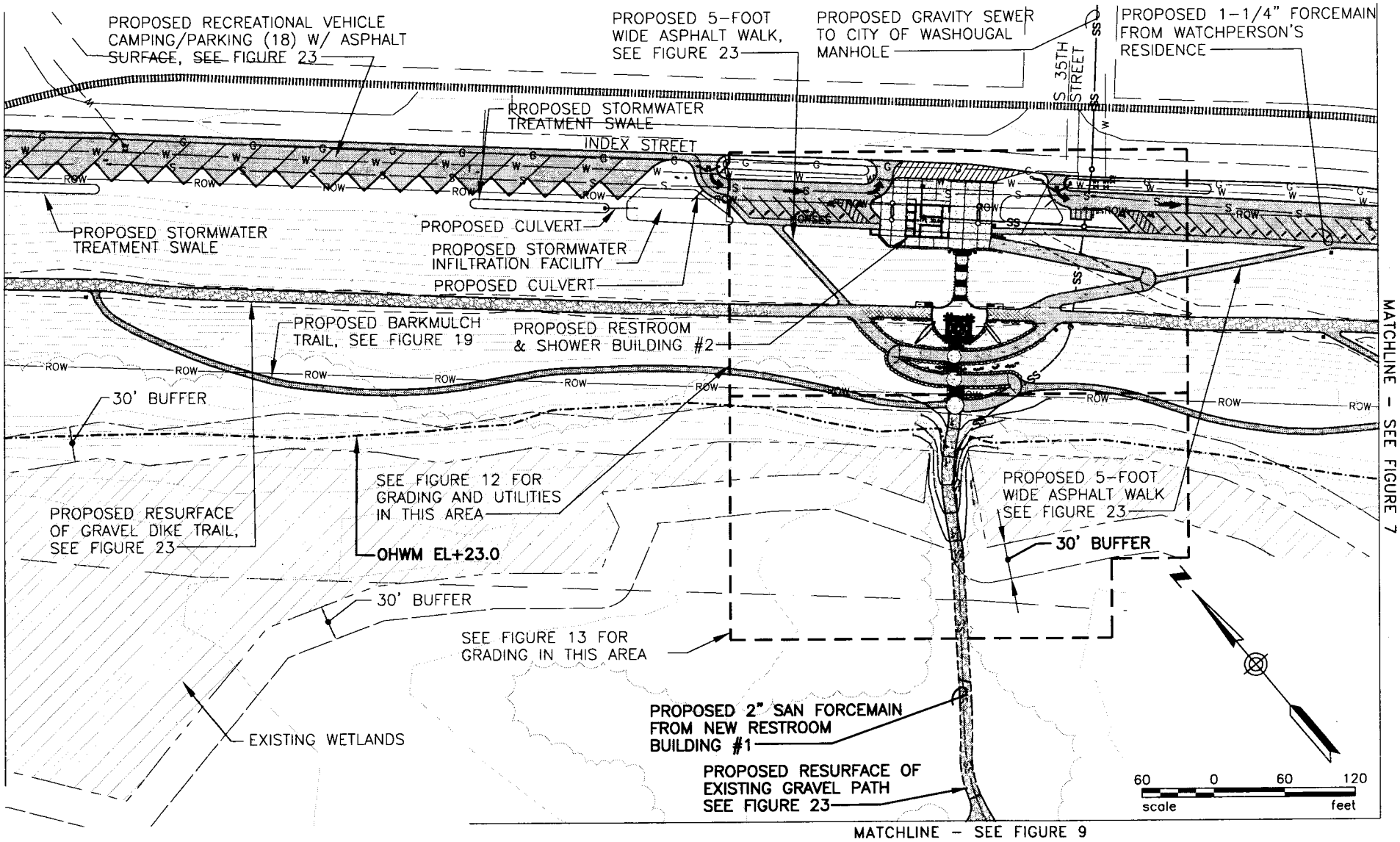

CAPT. WILLIAM CLARK PARK AT COTTONWOOD BEACH, PHASE I - PERMIT APPLICATION COE No.

PURPOSE: TO CONSTRUCT AND IMPROVE A RIVERFRONT PUBLIC PARK

DATUM: NGVD 29-47
LAT: 45°33'58" LON: -122°20'25"

ADJACENT PROPERTY OWNERS:

PLAN VIEW - 5

200400143

VANCOUVER - CLARK PARKS AND RECREATION DEPARTMENT
CAPTAIN WILLIAM CLARK PARK AT COTTONWOOD BEACH, PHASE I

PROPOSED: CONSTRUCT NEW PARK FACILITIES INCLUDING TRAILS, RESTROOMS, CAMPING SITES, PICNIC SITES, FIXED AND FLOATING DOCKS

IN: CITY OF WASHOUGAL
AT: COLUMBIA RIVER MILE 123.2 TO 124.6, SEC 16, T1N, R4E
COUNTY OF: CLARK STATE: WA
APPLICATION BY: VANCOUVER - CLARK PARKS

FIGURE 6 OF 25

DATE: JULY 28, 2004

File Name: O:\Data\TWC\CLIENTS\Vanc-Clark Parks\Cottonwood Beach Phase 1\Autocad\April 2004 revisions\Revised Permit Set for Corp 072104/sheet6.dwg

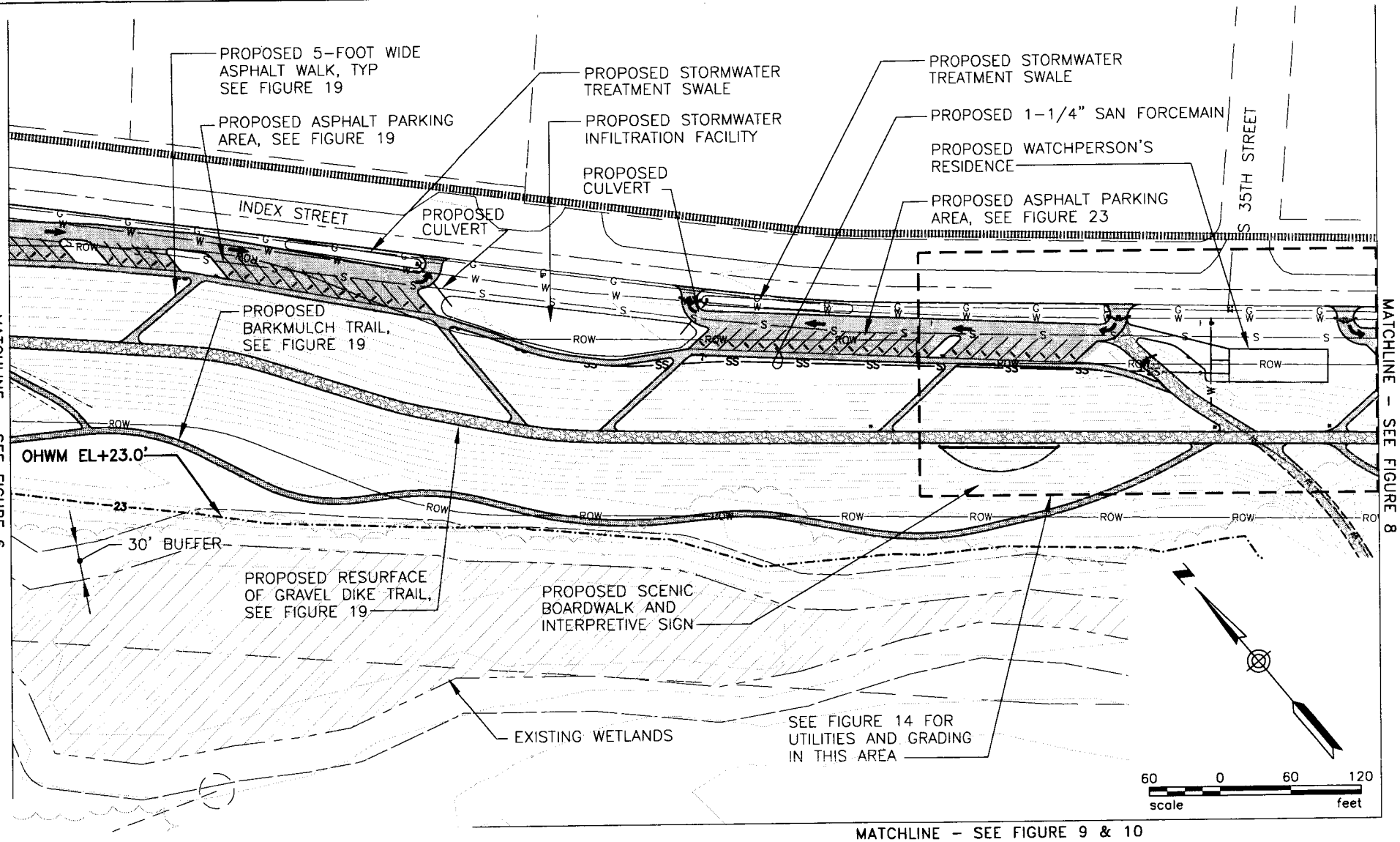

CAPT. WILLIAM CLARK PARK AT COTTONWOOD BEACH, PHASE I - PERMIT APPLICATION COE No.

PURPOSE: TO CONSTRUCT AND IMPROVE A RIVERFRONT PUBLIC PARK

DATUM: NGVD 29-47
LAT: 45°33'58" LON: -122°20'25"

ADJACENT PROPERTY OWNERS:

PLAN VIEW - 6

200400143

VANCOUVER - CLARK PARKS AND RECREATION DEPARTMENT
CAPTAIN WILLIAM CLARK PARK AT COTTONWOOD BEACH, PHASE I

PROPOSED: CONSTRUCT NEW PARK FACILITIES INCLUDING TRAILS, RESTROOMS, CAMPING SITES, PICNIC SITES, FIXED AND FLOATING DOCKS

IN: CITY OF WASHOUGAL
AT: COLUMBIA RIVER MILE 123.2 TO 124.6, SEC 16, T1N, R4E
COUNTY OF: CLARK STATE: WA
APPLICATION BY: VANCOUVER - CLARK PARKS

FIGURE 7 OF : 25

DATE: JULY 28, 2004

File Name: O:\Data\TMC\CLIENTS\Vanc-Clark Parks\Cottonwood Beach Phase 1\Autocad\April 2004 revisions\Revised Permit Set for Corp 072104/sheet7.dwg

CAPT. WILLIAM CLARK PARK AT COTTONWOOD BEACH, PHASE I - PERMIT APPLICATION COE No.

MATCHLINE – SEE FIGURE 7

PROPOSED ASPHALT PARKING AREA, SEE FIGURE 23

PROPOSED RESURFACE OF EXIST GRAVEL DIKE TRAIL, SEE FIGURE 23

PROPOSED STORMWATER TREATMENT SWALE

PROPOSED STORMWATER INFILTRATION FACILITY

INDEX STREET

PROPOSED CULVERT

PROPOSED 5-FOOT WIDE ASPHALT WALK SEE FIGURE 23

END OF DIKE TRAIL IMPROVEMENTS

TREE LINE

PROPOSED BARKMULCH TRAIL, SEE FIGURE 19

OHWM EL+23.0'

PROPOSED 2" WATERLINE TO RESTROOM BUILDING #1 AND GROUP PICNIC SHELTERS

OHWM EL+23.0

EXISTING WETLANDS

30' BUFFER

PROPOSED RESURFACE OF EXISTING GRAVEL SERVICE ROAD/TRAIL

MATCHLINE – SEE FIGURE 10

60 0 60 120
scale feet

PURPOSE: TO CONSTRUCT AND IMPROVE A RIVERFRONT PUBLIC PARK

DATUM: NGVD 29-47
LAT: 45°33'58" LON: -122°20'25"

ADJACENT PROPERTY OWNERS:

PLAN VIEW - 7

200400143

VANCOUVER - CLARK PARKS AND RECREATION DEPARTMENT
CAPTAIN WILLIAM CLARK PARK AT COTTONWOOD BEACH, PHASE I

PROPOSED: CONSTRUCT NEW PARK FACILITIES INCLUDING TRAILS, RESTROOMS, CAMPING SITES, PICNIC SITES, FIXED AND FLOATING DOCKS

IN: CITY OF WASHOUGAL
AT: COLUMBIA RIVER MILE 123.2 TO 124.6, SEC 16, T1N, R4E
COUNTY OF: CLARK STATE: WA
APPLICATION BY: VANCOUVER - CLARK PARKS

FIGURE 8 OF 25 DATE: JULY 28, 2004

File Name: Q:\Data\TWC\CLIENTS\Vanc-Clark Parks\Cottonwood Beach Phase 1\Autocad\April 2004 revisions\Revised Permit Set for Corp 072104/sheet8.dwg

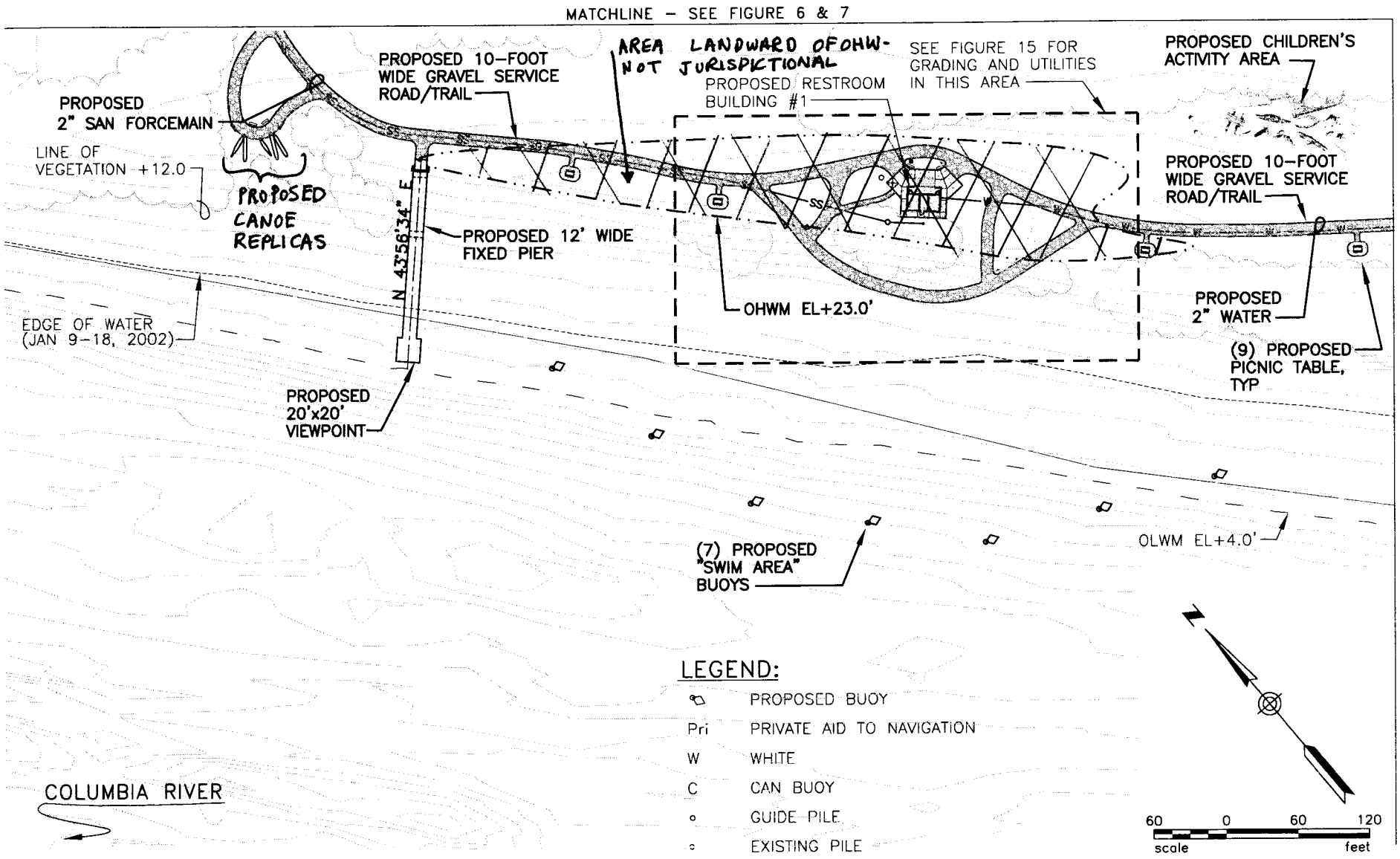

PURPOSE: TO CONSTRUCT AND IMPROVE A RIVERFRONT PUBLIC PARK

DATUM: NGVD 29-47
LAT: 45°33'58" LON: -122°20'25"

ADJACENT PROPERTY OWNERS:

PLAN VIEW - 8

200400143

VANCOUVER - CLARK PARKS AND RECREATION DEPARTMENT
CAPTAIN WILLIAM CLARK PARK AT COTTONWOOD BEACH, PHASE I

PROPOSED: CONSTRUCT NEW PARK FACILITIES INCLUDING TRAILS, RESTROOMS, CAMPING SITES, PICNIC SITES, FIXED AND FLOATING DOCKS

IN: CITY OF WASHOUGAL
AT: COLUMBIA RIVER MILE 123.2 TO 124.6, SEC 16, T1N, R4E
COUNTY OF: CLARK STATE: WA
APPLICATION BY: VANCOUVER - CLARK PARKS

FIGURE 9 OF 25 DATE: JULY 28, 2004

File Name: O:\Data\TWC\CLIENTS\Vanc-Clark Parks\Cottonwood Beach Phase 1\Autocad\April 2004 revisions\Revised Permit Set for Corp 072104/sheet9.dwg

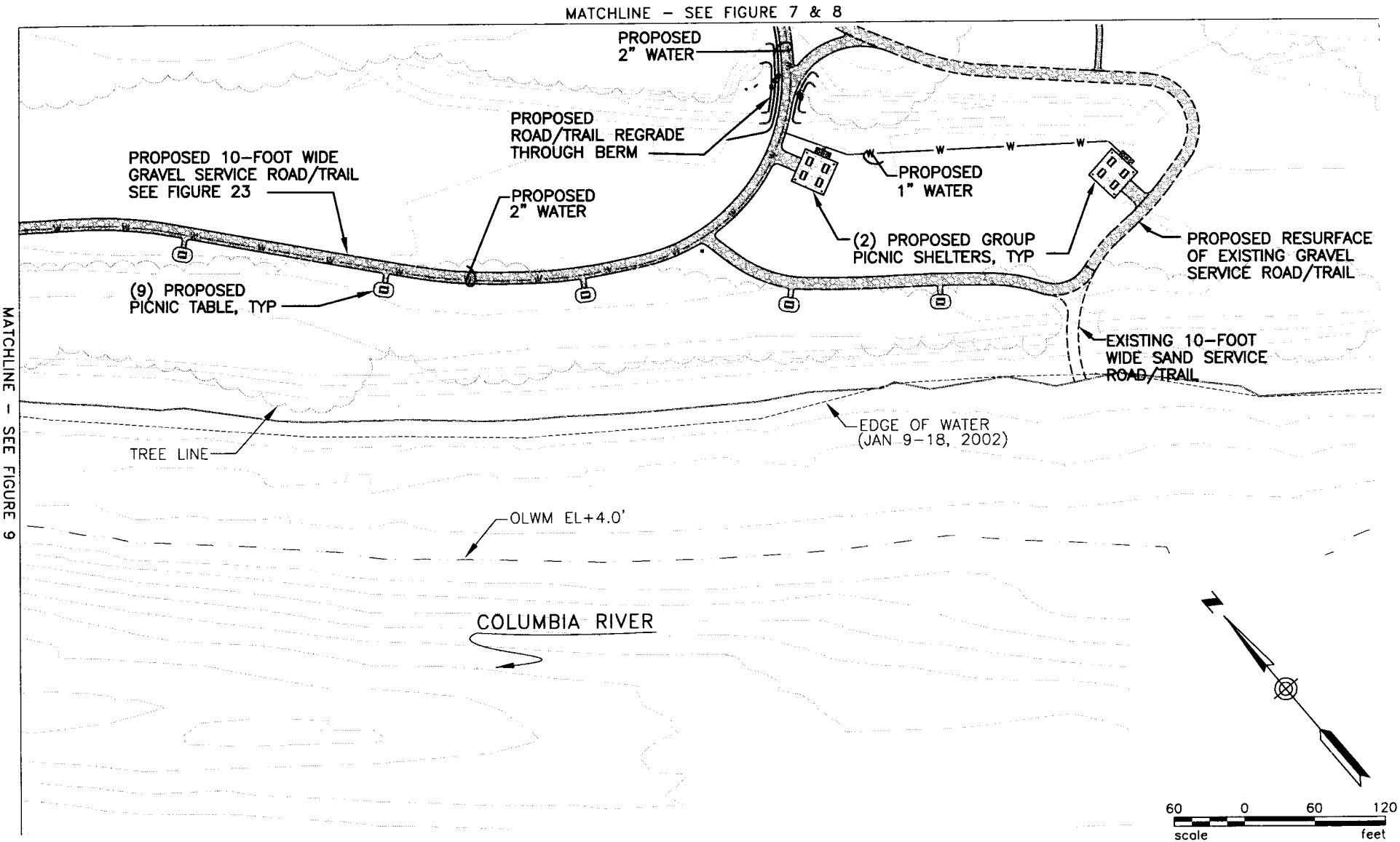

MATCHLINE – SEE FIGURE 9

CAPT. WILLIAM CLARK PARK AT COTTONWOOD BEACH, PHASE I - PERMIT APPLICATION COE No.

PURPOSE: TO CONSTRUCT AND IMPROVE A RIVERFRONT PUBLIC PARK

DATUM: NGVD 29-47
LAT: 45°33'58" LON: -122°20'25"

ADJACENT PROPERTY OWNERS:

PLAN VIEW - 9

200400143

VANCOUVER - CLARK PARKS AND RECREATION DEPARTMENT
CAPTAIN WILLIAM CLARK PARK AT COTTONWOOD BEACH, PHASE I

PROPOSED: CONSTRUCT NEW PARK FACILITIES INCLUDING TRAILS, RESTROOMS, CAMPING SITES, PICNIC SITES, FIXED AND FLOATING DOCKS

IN: CITY OF WASHOUGAL
AT: COLUMBIA RIVER MILE 123.2 TO 124.6, SEC 16, T1N, R4E
COUNTY OF: CLARK STATE: WA
APPLICATION BY: VANCOUVER - CLARK PARKS

FIGURE 10 OF 25 DATE: JULY 28, 2004

File Name: O:\Data\TWC\CLIENTS\Vanc-Clark Parks\Cottonwood Beach Phase 1\Autocad\April 2004 revisions\Revised Permit Set for Corp 072104/sheet10.dwg

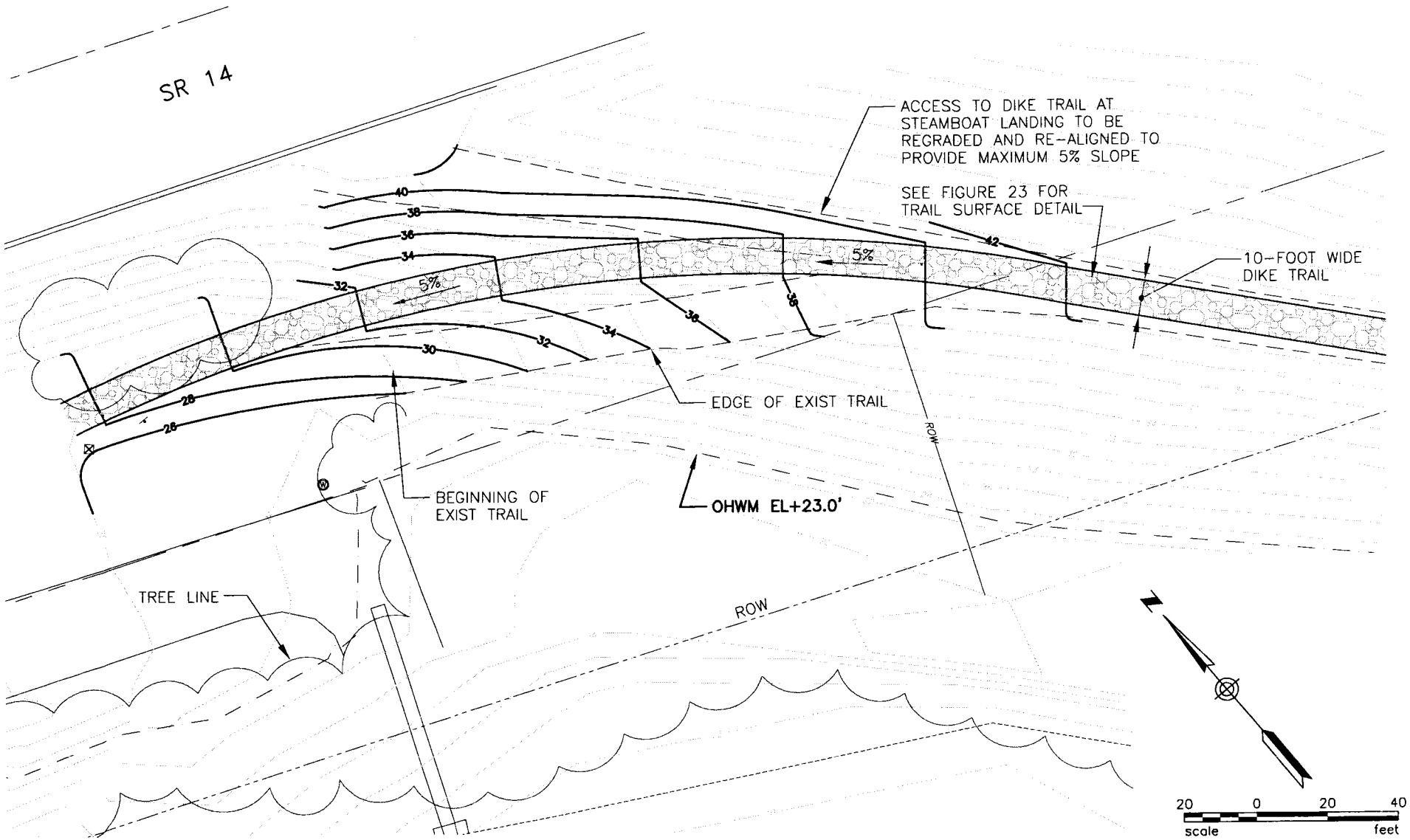

PURPOSE: TO CONSTRUCT AND IMPROVE A RIVERFRONT PUBLIC PARK

DATUM: NGVD 29-47
LAT: 45°33'58" LON: -122°20'25"

ADJACENT PROPERTY OWNERS:

DIKE TRAIL ACCESS REALIGNMENT AT STEAMBOAT LANDING

VANCOUVER - CLARK PARKS AND RECREATION DEPARTMENT
CAPTAIN WILLIAM CLARK PARK AT COTTONWOOD BEACH, PHASE I

2004 00143

PROPOSED: CONSTRUCT NEW PARK FACILITIES INCLUDING TRAILS, RESTROOMS, CAMPING SITES, PICNIC SITES, FIXED AND FLOATING DOCKS

IN: CITY OF WASHOUGAL
AT: COLUMBIA RIVER MILE 123.2 TO 124.6, SEC 16, T1N, R4E
COUNTY OF: CLARK STATE: WA
APPLICATION BY: VANCOUVER - CLARK PARKS

FIGURE 11 OF 25

DATE: JULY 28, 2004

File Name: Q:\Data\TMC\CLIENTS\Vanc-Clark Parks\Cottonwood Beach Phase 1\Autocad\April 2004 revisions\Revised Permit Set for Corp 072104/sheet11.dwg

CAPT. WILLIAM CLARK PARK AT COTTONWOOD BEACH, PHASE I - PERMIT APPLICATION COE No.

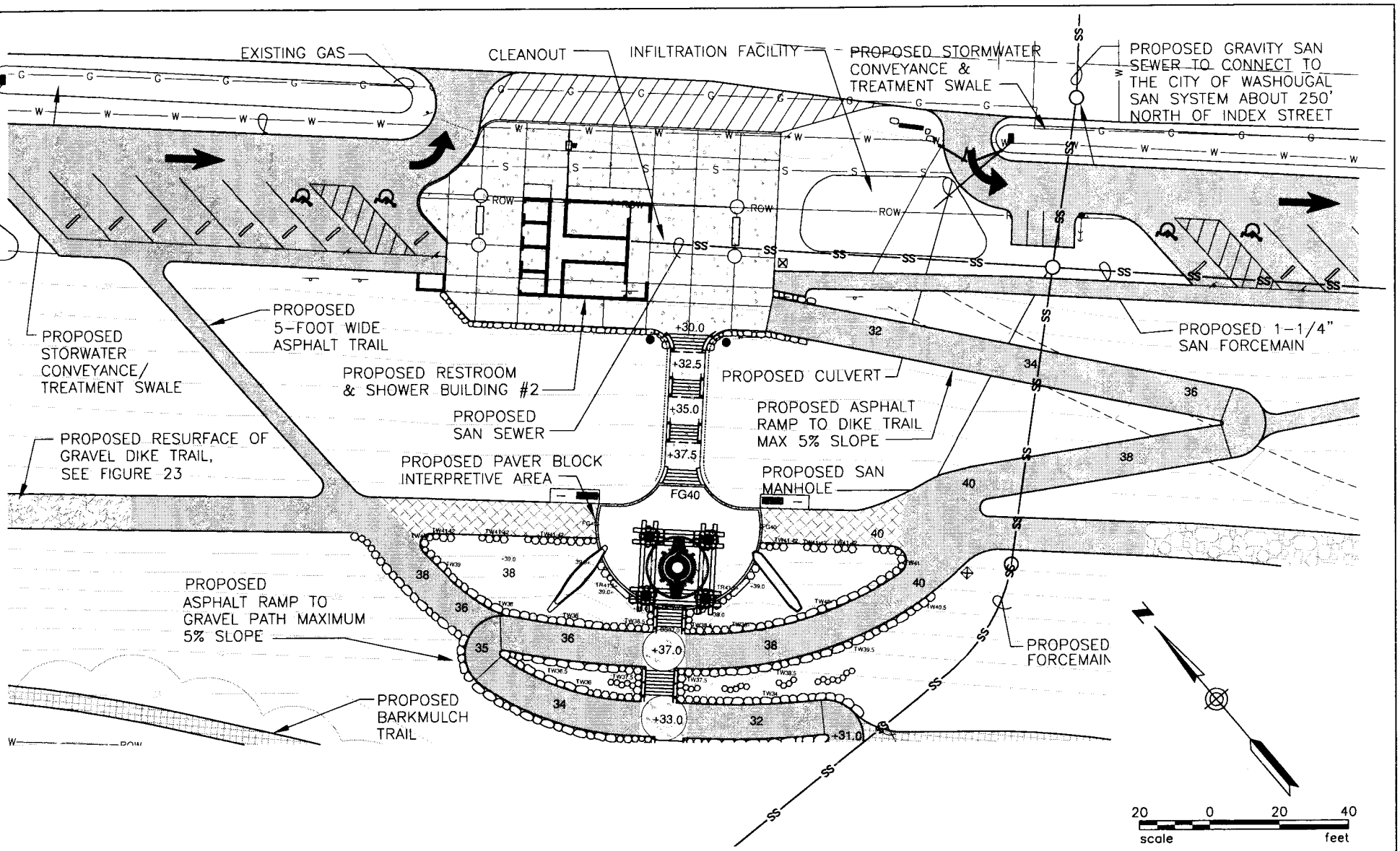

PURPOSE: TO CONSTRUCT AND IMPROVE A RIVERFRONT PUBLIC PARK

DATUM: NGVD 29-47
LAT: 45°33'58" LON: -122°20'25"

ADJACENT PROPERTY OWNERS:

GRADING & UTILITIES AT PARK ENTRY RESTROOM/SHOWER BUILDING

VANCOUVER - CLARK PARKS AND RECREATION DEPARTMENT
CAPTAIN WILLIAM CLARK PARK AT COTTONWOOD BEACH, PHASE I

200400143

PROPOSED: CONSTRUCT NEW PARK FACILITIES INCLUDING TRAILS, RESTROOMS, CAMPING SITES, PICNIC SITES, FIXED AND FLOATING DOCKS

IN: CITY OF WASHOUGAL
AT: COLUMBIA RIVER MILE 123.2 TO 124.6, SEC 16, T1N, R4E
COUNTY OF: CLARK STATE: WA
APPLICATION BY: VANCOUVER - CLARK PARKS

FIGURE 12 OF 25 DATE: JULY 28, 2004

File Name: O:\Data\TWC\CLIENTS\Vanc-Clark Parks\Cottonwood Beach Phase 1\Autocad\April 2004 revisions\Revised Permit Set for Corp 072104/sheet12.dwg

CAPT. WILLIAM CLARK PARK AT COTTONWOOD BEACH, PHASE I - PERMIT APPLICATION COE No.

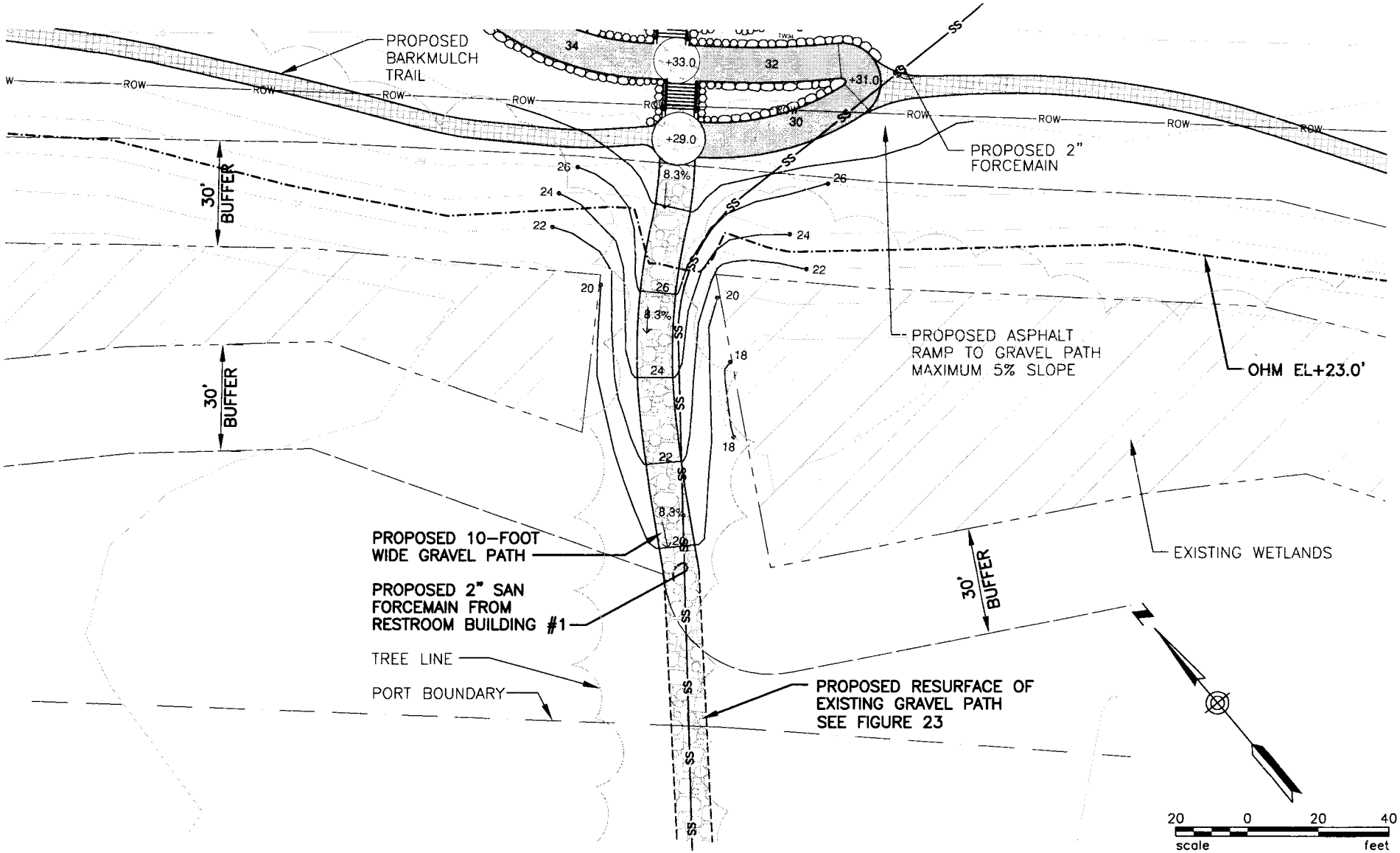

PURPOSE: TO CONSTRUCT AND IMPROVE A RIVERFRONT PUBLIC PARK

DATUM: NGVD 29-47
LAT: 45°33'58" LON: -122°20'25"

ADJACENT PROPERTY OWNERS:

GRADING & UTILITIES FOR GRAVEL TRAIL TO FIXED PIER

VANCOUVER - CLARK PARKS AND RECREATION DEPARTMENT
CAPTAIN WILLIAM CLARK PARK AT COTTONWOOD BEACH, PHASE I

200400143

PROPOSED: CONSTRUCT NEW PARK FACILITIES INCLUDING TRAILS, RESTROOMS, CAMPING SITES, PICNIC SITES, FIXED AND FLOATING DOCKS

IN: CITY OF WASHOUGAL
AT: COLUMBIA RIVER MILE 123.2 TO 124.6, SEC 16, T1N, R4E
COUNTY OF: CLARK STATE: WA
APPLICATION BY: VANCOUVER - CLARK PARKS

FIGURE 13 OF 25 DATE: JULY 28, 2004

File Name: O:\Data\TWC\CLIENTS\Vanc-Clark Parks\Cottonwood Beach Phase 1\Autocad\April 2004 revisions\Revised Permit Set for Corp 072104/sheet13.dwg

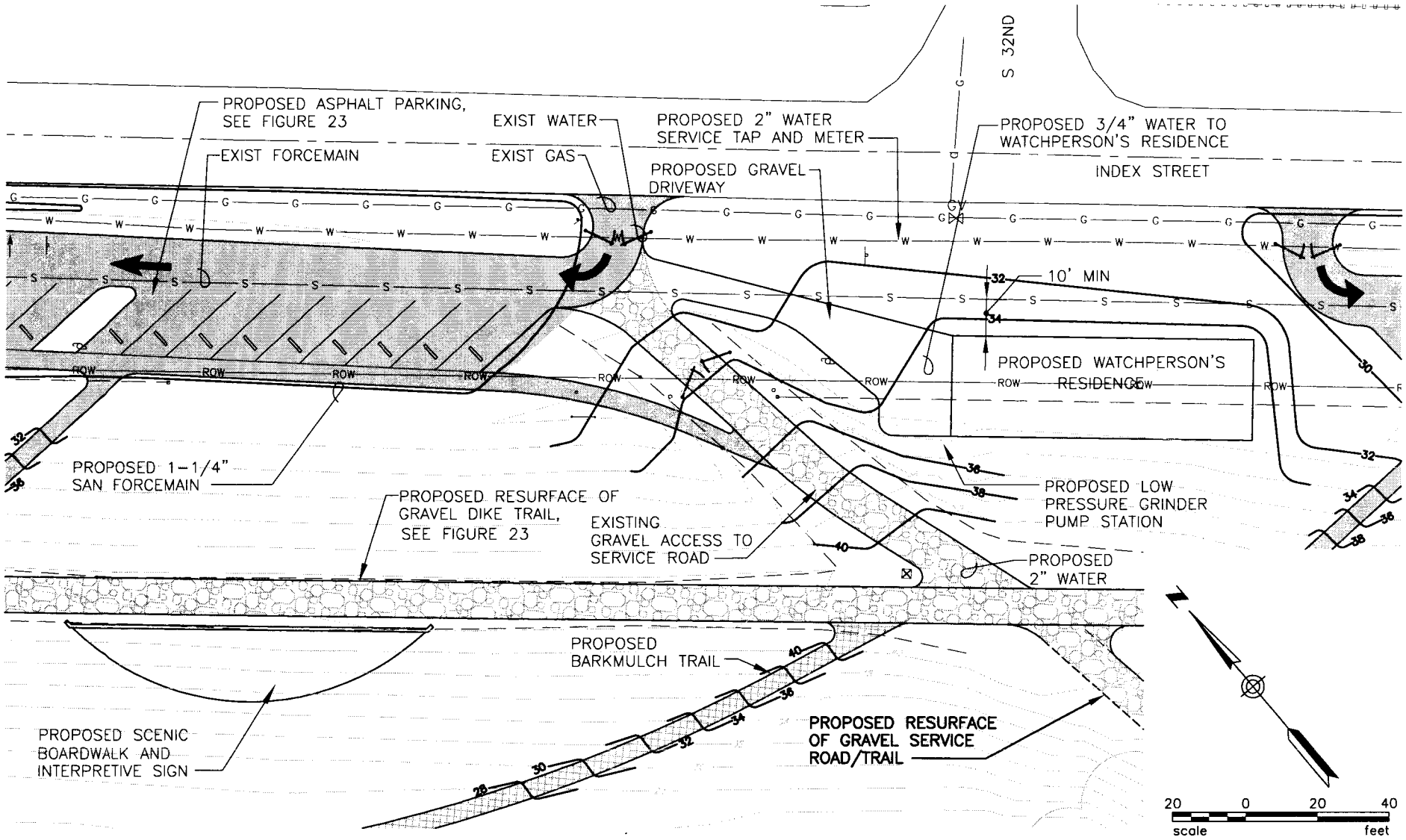

PURPOSE: TO CONSTRUCT AND IMPROVE A RIVERFRONT PUBLIC PARK

DATUM: NGVD 29-47
LAT: 45°33'58" LON: -122°20'25"

ADJACENT PROPERTY OWNERS:

GRADING & UTILITIES AT WATCHPERSON'S RESIDENCE

VANCOUVER - CLARK PARKS AND RECREATION DEPARTMENT
CAPTAIN WILLIAM CLARK PARK AT COTTONWOOD BEACH, PHASE I

200400143

PROPOSED: CONSTRUCT NEW PARK FACILITIES INCLUDING TRAILS, RESTROOMS, CAMPING SITES, PICNIC SITES, FIXED AND FLOATING DOCKS

IN: CITY OF WASHOUGAL
AT: COLUMBIA RIVER MILE 123.2 TO 124.6, SEC 16, T1N, R4E
COUNTY OF: CLARK STATE: WA
APPLICATION BY: VANCOUVER - CLARK PARKS

FIGURE 14 OF 25 DATE: JULY 28, 2004

File Name: O:\Data\TMC\CLIENTS\Vanc-Clark Parks\Cottonwood Beach Phase 1\Autocad\April 2004 revisions\Revised Permit Set for Corp 072104/sheet14.dwg

CAPT. WILLIAM CLARK PARK AT COTTONWOOD BEACH, PHASE I - PERMIT APPLICATION COE No.

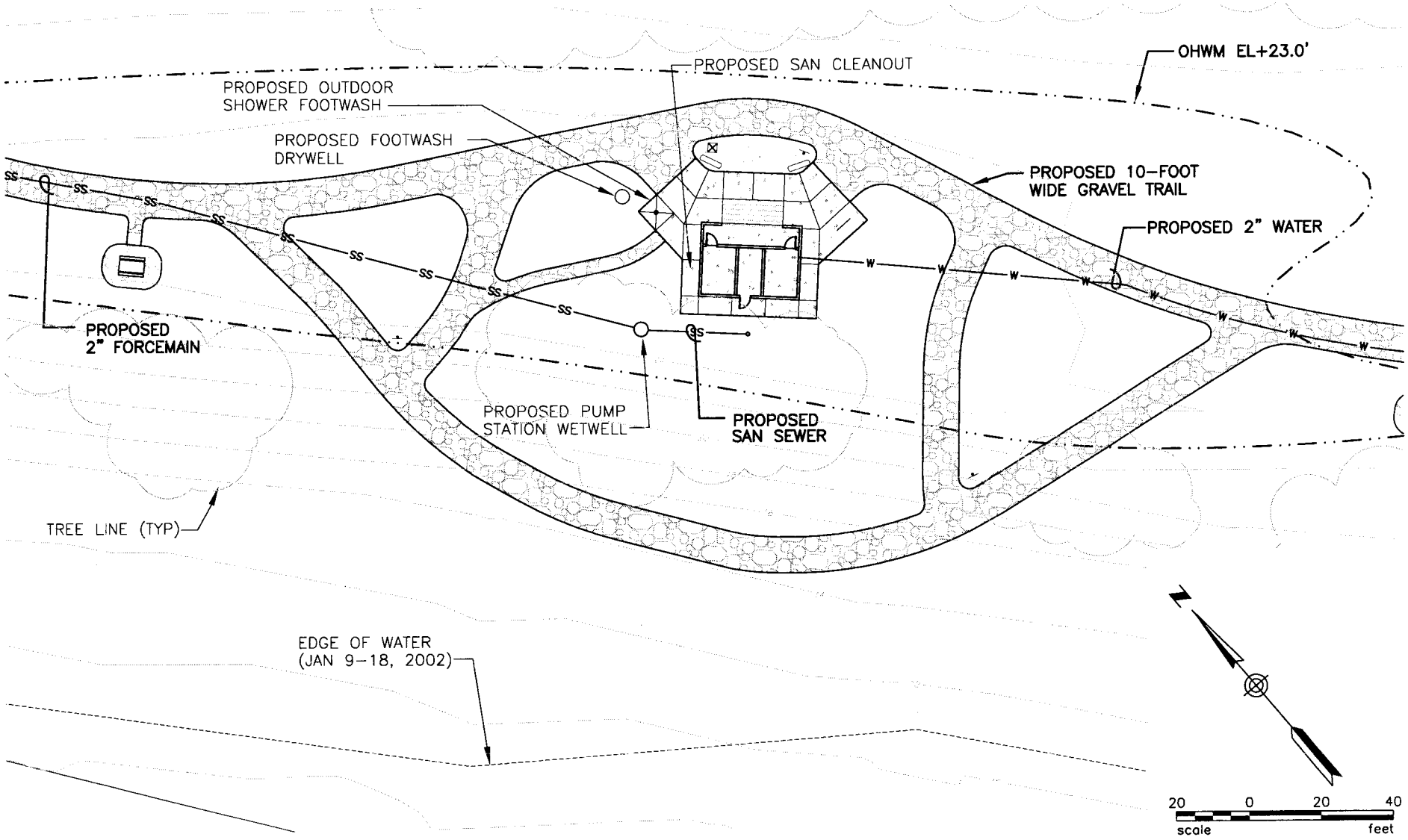

PURPOSE: TO CONSTRUCT AND IMPROVE A RIVERFRONT PUBLIC PARK

DATUM: NGVD 29-47
LAT: 45°33'58" LON: -122°20'25"

ADJACENT PROPERTY OWNERS:

GRADING & UTILITIES AT FIXED PIER RESTROOM BUILDING #1

VANCOUVER - CLARK PARKS AND RECREATION DEPARTMENT
CAPTAIN WILLIAM CLARK PARK AT COTTONWOOD BEACH, PHASE I

200400143

PROPOSED: CONSTRUCT NEW PARK FACILITIES INCLUDING TRAILS, RESTROOMS, CAMPING SITES, PICNIC SITES, FIXED AND FLOATING DOCKS

IN: CITY OF WASHOUGAL
AT: COLUMBIA RIVER MILE 123.2 TO 124.6, SEC 16, T1N, R4E
COUNTY OF: CLARK STATE: WA
APPLICATION BY: VANCOUVER - CLARK PARKS

FIGURE 15 OF 25 DATE: JULY 28, 2004

File Name: O:\Data\TWC\CLIENTS\Vanc-Clark Parks\Cottonwood Beach Phase 1\Autocad\April 2004 revisions\Revised Permit Set for Corp 072104/sheet15.dwg

CAPT. WILLIAM CLARK PARK AT COTTONWOOD BEACH, PHASE I - PERMIT APPLICATION COE No.

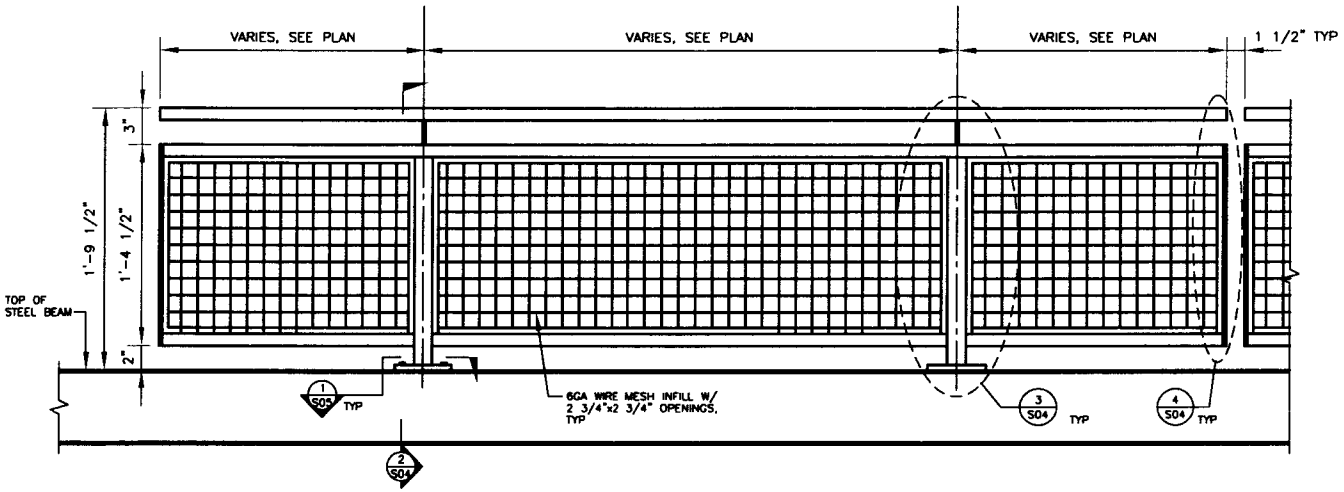

1 S04 TYPICAL PEDESTRIAN GUARDRAIL ELEVATION
SCALE: NOT TO SCALE

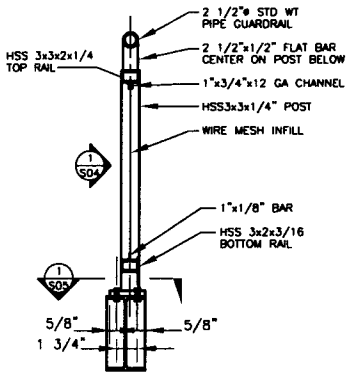

2 S04 PEDESTRIAN GUARDRAIL SECTION
SCALE: NOT TO SCALE

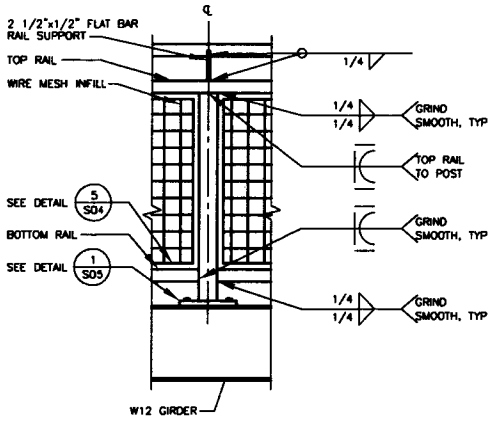

3 S04 GUARDRAIL ELEVATION AT POST
SCALE: NOT TO SCALE

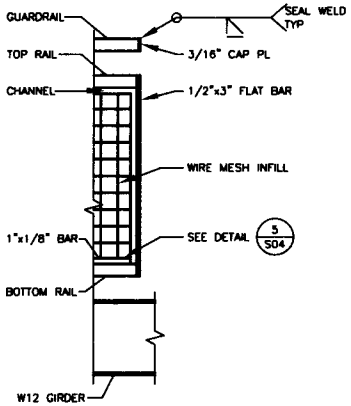

4 S04 GUARDRAIL ELEVATION AT END POST
SCALE: NOT TO SCALE

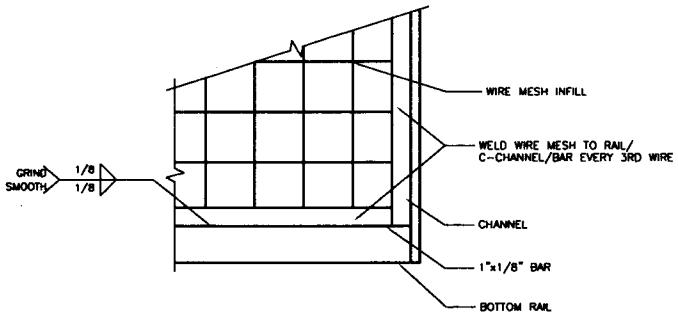

5 S04 WIRE MESH FRAME DETAIL
SCALE: NOT TO SCALE

PURPOSE: TO CONSTRUCT AND IMPROVE A RIVERFRONT PUBLIC PARK

DATUM: NGVD 29-47
LAT: 45°33'58" LON: -122°20'25"

ADJACENT PROPERTY OWNERS:

DETAILS

VANCOUVER - CLARK PARKS AND RECREATION DEPARTMENT
CAPTAIN WILLIAM CLARK PARK AT COTTONWOOD BEACH, PHASE I

200400143

PROPOSED: CONSTRUCT NEW PARK FACILITIES INCLUDING TRAILS, RESTROOMS, CAMPING SITES, PICNIC SITES, FIXED AND FLOATING DOCKS

IN: CITY OF WASHOUGAL
AT: COLUMBIA RIVER MILE 123.2 TO 124.6, SEC 16, T1N, R4E
COUNTY OF: CLARK STATE: WA
APPLICATION BY: VANCOUVER - CLARK PARKS

FIGURE 16 OF 25 DATE: JULY 28, 2004

File Name: O:\Data\TWC\CLIENTS\Vanc-Clark Parks\Cottonwood Beach Phase 1\Autocad\April 2004 revisions\Revised Permit Set for Corp 072104/sheet16.dwg

CAPT. WILLIAM CLARK PARK AT COTTONWOOD BEACH, PHASE I - PERMIT APPLICATION COE No.

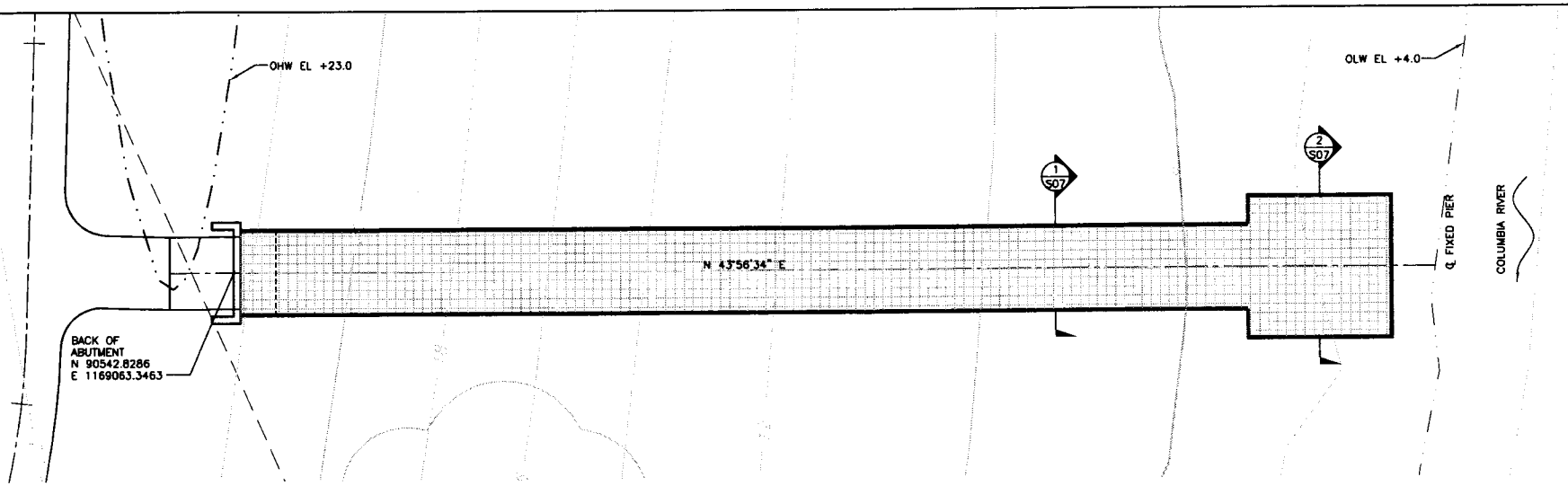

PLAN – FIXED PIER
SCALE: NOT TO SCALE

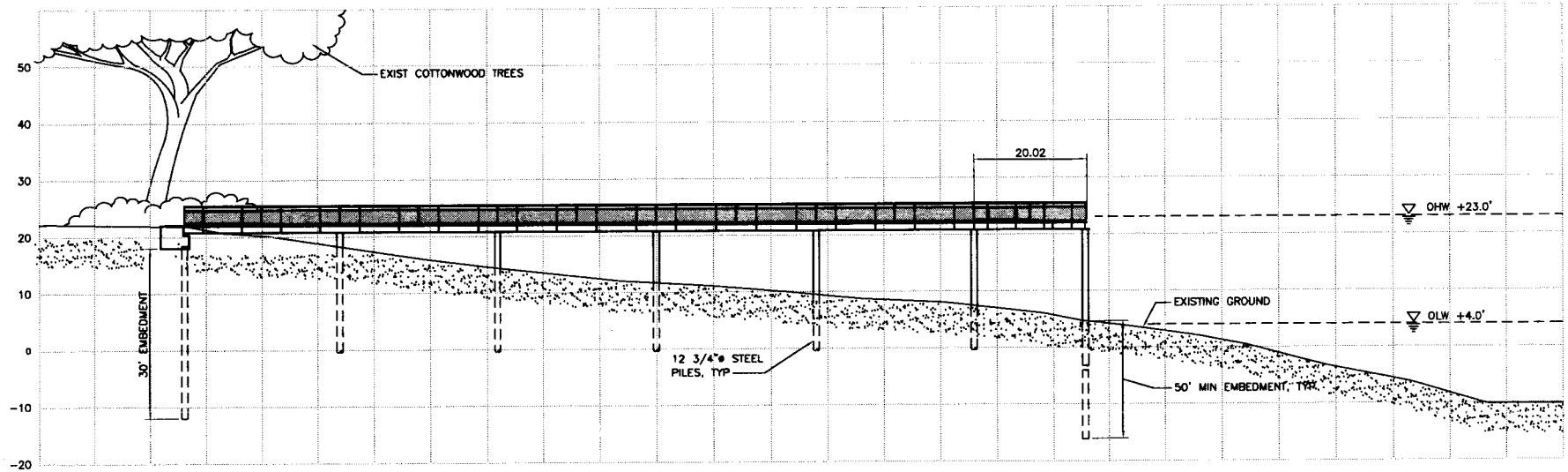

ELEVATION – FIXED PIER
SCALE: NOT TO SCALE

PURPOSE: TO CONSTRUCT AND IMPROVE A RIVERFRONT PUBLIC PARK

DATUM: NGVD 29-47
LAT: 45°33'58" LON: -122°20'25"

ADJACENT PROPERTY OWNERS:

DETAILS

VANCOUVER - CLARK PARKS AND RECREATION DEPARTMENT
CAPTAIN WILLIAM CLARK PARK AT COTTONWOOD BEACH, PHASE I

200400143

PROPOSED: CONSTRUCT NEW PARK FACILITIES INCLUDING TRAILS, RESTROOMS, CAMPING SITES, PICNIC SITES, FIXED AND FLOATING DOCKS

IN: CITY OF WASHOUGAL
AT: COLUMBIA RIVER MILE 123.2 TO 124.6, SEC 16, T1N, R4E
COUNTY OF: CLARK STATE: WA
APPLICATION BY: VANCOUVER - CLARK PARKS

FIGURE 17 OF 25 DATE: JULY 28, 2004

File Name: O:\Data\IWC\CLIENTS\Vanc-Clark Parks\Cottonwood Beach Phase 1\Autocad\April 2004 revisions\Revised Permit Set for Corp 072104/sheet17.dwg

CAPT. WILLIAM CLARK PARK AT COTTONWOOD BEACH, PHASE I - PERMIT APPLICATION COE No.

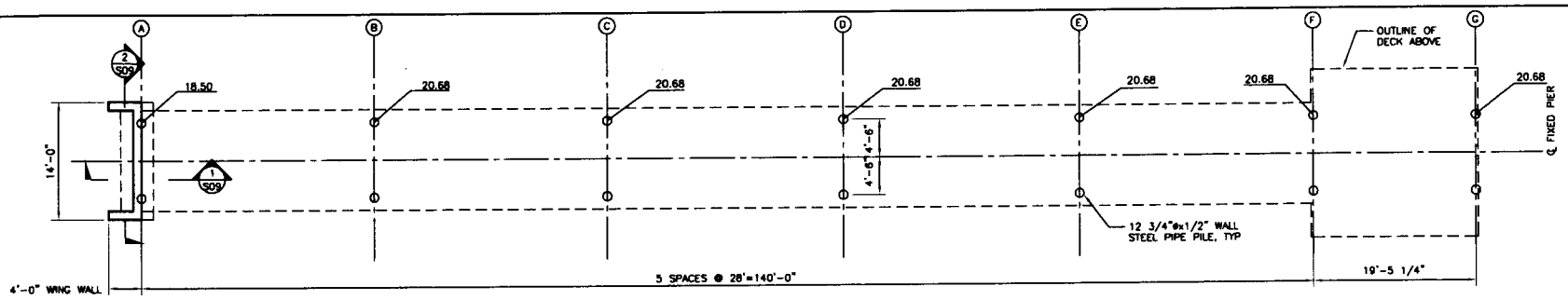

1 S07 FOUNDATION PLAN
SCALE: NOT TO SCALE

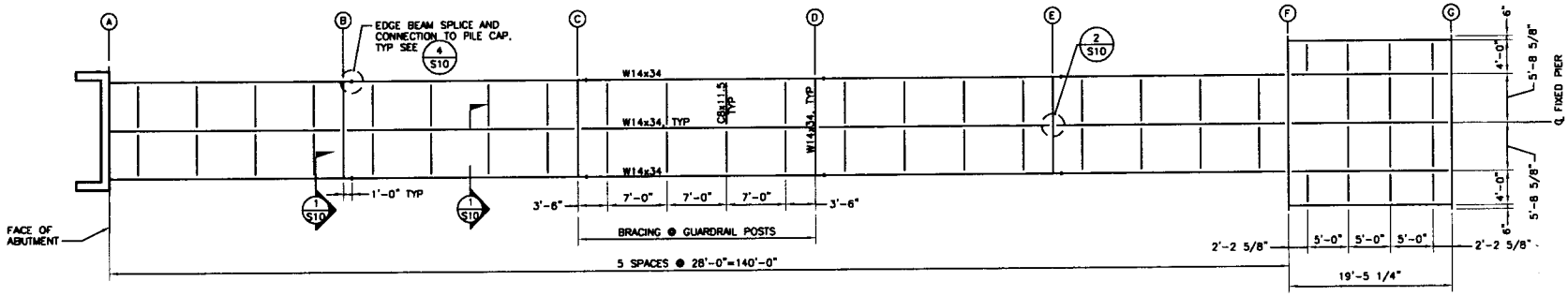

2 S07 FRAMING PLAN
SCALE: NOT TO SCALE

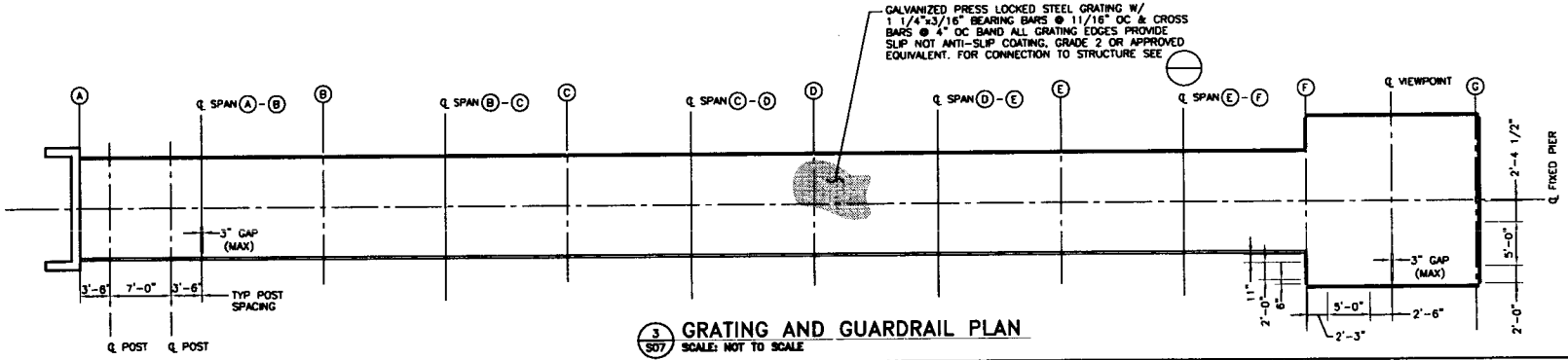

3 S07 GRATING AND GUARDRAIL PLAN
SCALE: NOT TO SCALE

PURPOSE: TO CONSTRUCT AND IMPROVE A RIVERFRONT PUBLIC PARK

DATUM: NGVD 29-47
LAT: 45°33'58" LON: -122°20'25"

ADJACENT PROPERTY OWNERS:

DETAILS

VANCOUVER - CLARK PARKS AND RECREATION DEPARTMENT
CAPTAIN WILLIAM CLARK PARK AT COTTONWOOD BEACH, PHASE I

200400143

PROPOSED: CONSTRUCT NEW PARK FACILITIES INCLUDING TRAILS, RESTROOMS, CAMPING SITES, PICNIC SITES, FIXED AND FLOATING DOCKS

IN: CITY OF WASHOUGAL
AT: COLUMBIA RIVER MILE 123.2 TO 124.6, SEC 16, T1N, R4E
COUNTY OF: CLARK STATE: WA
APPLICATION BY: VANCOUVER - CLARK PARKS

FIGURE 18 OF 25 DATE: JULY 28, 2004

File Name: O:\Data\TWC\CLIENTS\Vanc-Clark Parks\Cottonwood Beach Phase 1\Autocad\April 2004 revisions\Revised Permit Set for Corp 072104/sheet18.dwg

CAPT. WILLIAM CLARK PARK AT COTTONWOOD BEACH, PHASE I - PERMIT APPLICATION COE No.

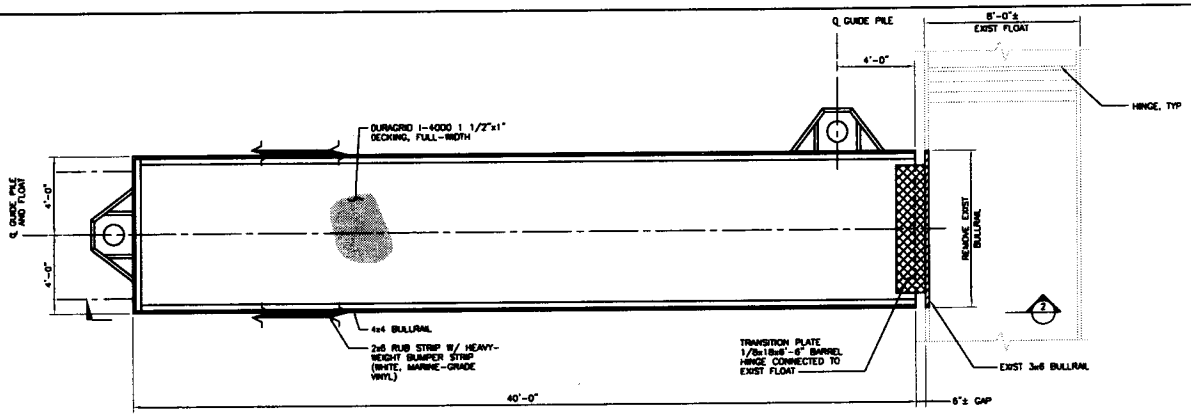

1/S11 PLAN – CANOE/KAYAK FLOAT
SCALE: NOT TO SCALE

2/S11 ELEVATION – CANOE/KAYAK FLOAT
SCALE: NOT TO SCALE

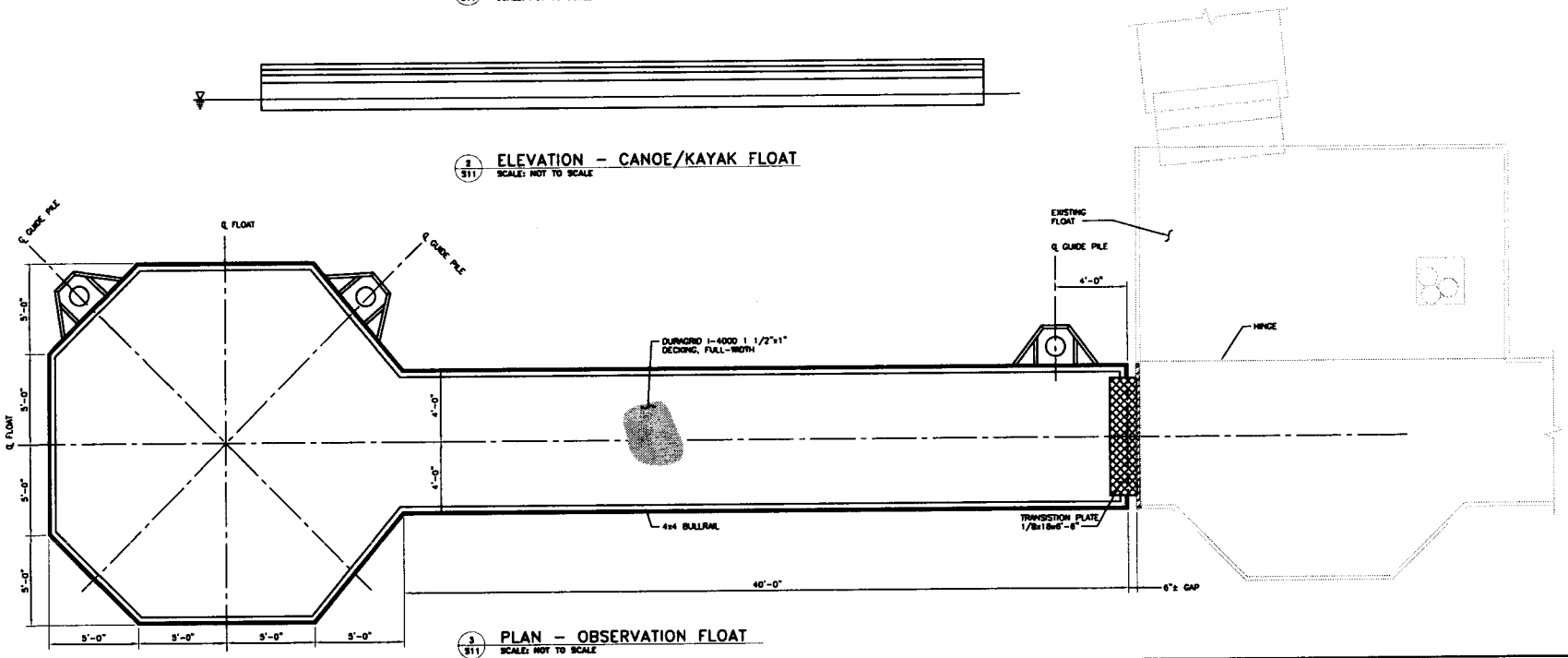

3/S11 PLAN – OBSERVATION FLOAT
SCALE: NOT TO SCALE

PURPOSE: TO CONSTRUCT AND IMPROVE A RIVERFRONT PUBLIC PARK

DATUM: NGVD 29-47
LAT: 45°33'58" LON: -122°20'25"

ADJACENT PROPERTY OWNERS:

DETAILS

VANCOUVER - CLARK PARKS AND RECREATION DEPARTMENT
CAPTAIN WILLIAM CLARK PARK AT COTTONWOOD BEACH, PHASE I

PROPOSED: CONSTRUCT NEW PARK FACILITIES INCLUDING TRAILS, RESTROOMS, CAMPING SITES, PICNIC SITES, FIXED AND FLOATING DOCKS

IN: CITY OF WASHOUGAL
AT: COLUMBIA RIVER MILE 123.2 TO 124.6, SEC 16, T1N, R4E
COUNTY OF: CLARK STATE: WA
APPLICATION BY: VANCOUVER - CLARK PARKS

FIGURE 19 OF 25 DATE: JULY 28, 2004

File Name: O:\Data\TWC\CLIENTS\Vanc-Clark Parks\Cottonwood Beach Phase 1\Autocad\April 2004 revisions\Revised Permit Set for Corp 072104/sheet19.dwg

CAPT. WILLIAM CLARK PARK AT COTTONWOOD BEACH, PHASE I - PERMIT APPLICATION COE No.

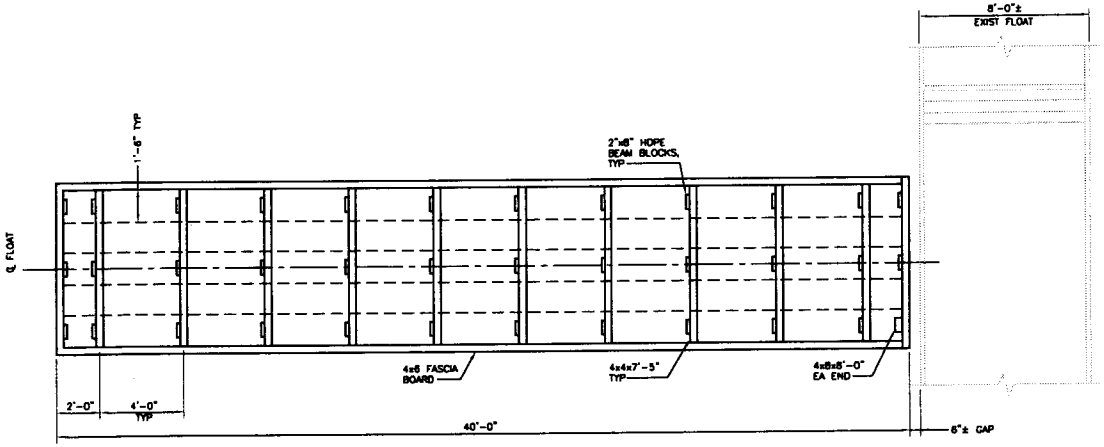

1 S12 PLAN – CANOE/KAYAK FLOAT FRAMING
SCALE: NOT TO SCALE

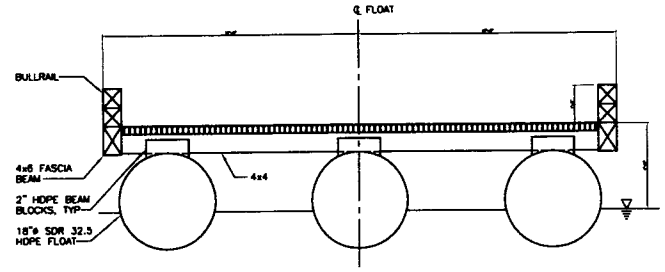

2 S12 SECTION – TYPICAL FLOAT
SCALE: NOT TO SCALE

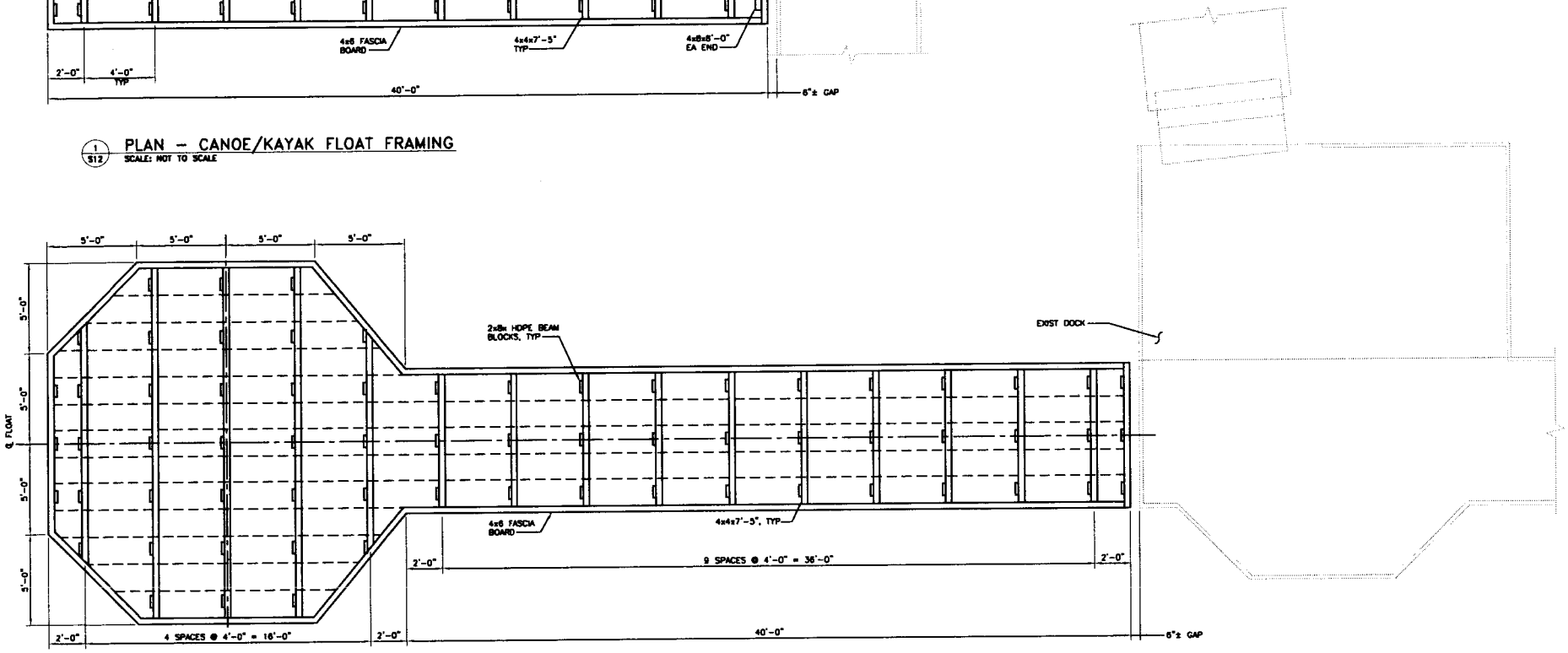

3 S12 PLAN – OBSERVATION FLOAT FRAMING
SCALE: NOT TO SCALE

PURPOSE: TO CONSTRUCT AND IMPROVE A RIVERFRONT PUBLIC PARK

DATUM: NGVD 29-47
LAT: 45°33'58" LON: -122°20'25"

ADJACENT PROPERTY OWNERS:

DETAILS

VANCOUVER - CLARK PARKS AND RECREATION DEPARTMENT
CAPTAIN WILLIAM CLARK PARK AT COTTONWOOD BEACH, PHASE I

20040014 3

PROPOSED: CONSTRUCT NEW PARK FACILITIES INCLUDING TRAILS, RESTROOMS, CAMPING SITES, PICNIC SITES, FIXED AND FLOATING DOCKS

IN: CITY OF WASHOUGAL
AT: COLUMBIA RIVER MILE 123.2 TO 124.6, SEC 16, T1N, R4E
COUNTY OF: CLARK STATE: WA
APPLICATION BY: VANCOUVER - CLARK PARKS

FIGURE 20 OF 25 DATE: JULY 28, 2004

File Name: Q:\Data\TWC\CLIENTS\Vanc-Clark Parks\Cottonwood Beach Phase 1\Autocad\April 2004 revisions\Revised Permit Set for Corp 072104/sheet20.dwg

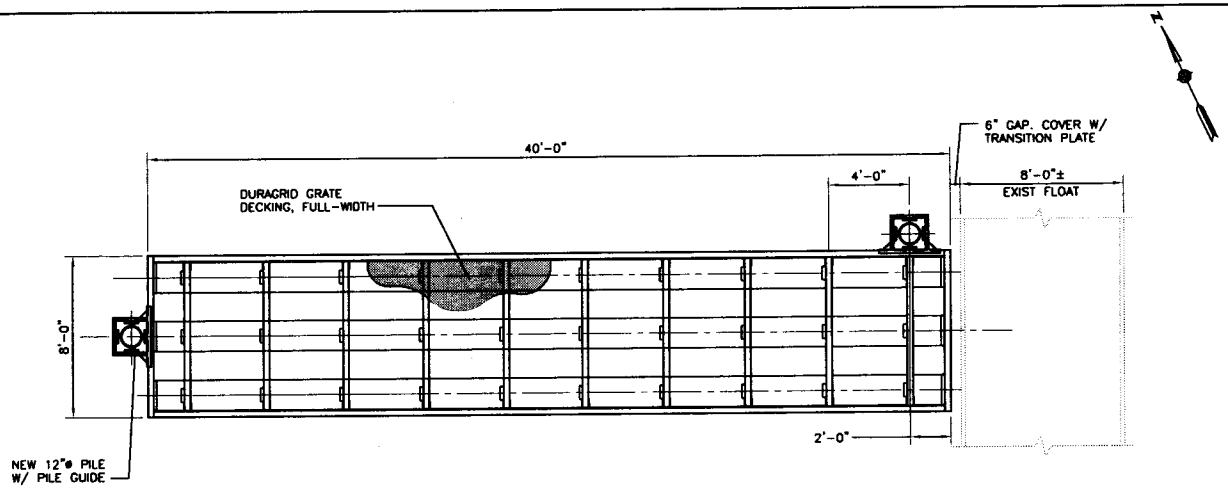

1 S14 PLAN – CANOE/KAYAK MOORING FLOAT
SCALE: NOT TO SCALE

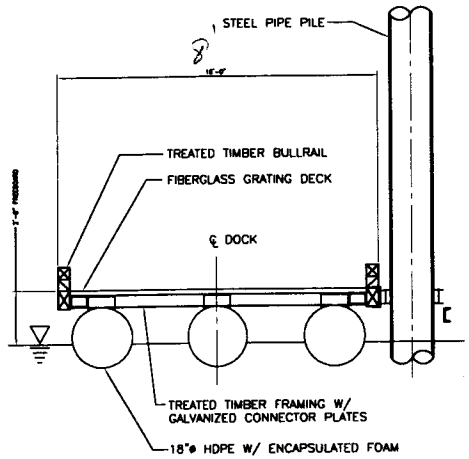

2 S14 FLOATING DOCK TYPICAL SECTION
SCALE: NOT TO SCALE

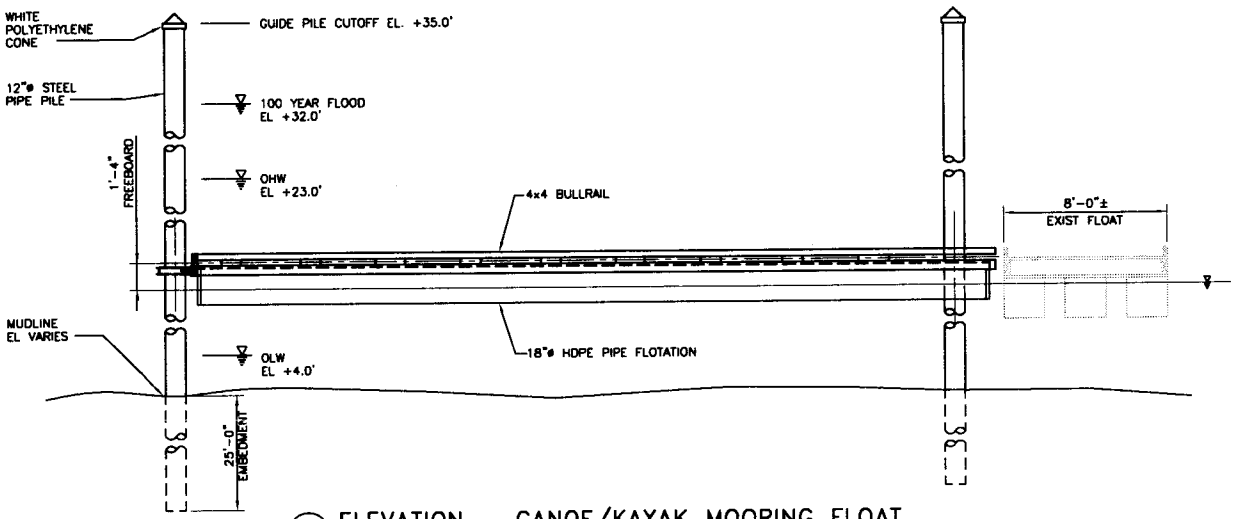

3 S14 ELEVATION – CANOE/KAYAK MOORING FLOAT
SCALE: NOT TO SCALE

PURPOSE: TO CONSTRUCT AND IMPROVE A RIVERFRONT PUBLIC PARK

DATUM: NGVD 29-47
LAT: 45°33'58" LON: -122°20'25"

ADJACENT PROPERTY OWNERS:

DETAILS

VANCOUVER - CLARK PARKS AND RECREATION DEPARTMENT
CAPTAIN WILLIAM CLARK PARK AT COTTONWOOD BEACH, PHASE I

200400143

PROPOSED: CONSTRUCT NEW PARK FACILITIES INCLUDING TRAILS, RESTROOMS, CAMPING SITES, PICNIC SITES, FIXED AND FLOATING DOCKS

IN: CITY OF WASHOUGAL
AT: COLUMBIA RIVER MILE 123.2 TO 124.6, SEC 16, T1N, R4E
COUNTY OF: CLARK STATE: WA
APPLICATION BY: VANCOUVER - CLARK PARKS

FIGURE 21 OF 25 DATE. JULY 28, 2004

CAPT. WILLIAM CLARK PARK AT COTTONWOOD BEACH, PHASE I - PERMIT APPLICATION COE No.

File Name: O:\Data\TWC\CLIENTS\Vanc-Clark Parks\Cottonwood Beach Phase 1\Autocad\April 2004 revisions\Revised Permit Set for Corp 072104/sheet21.dwg

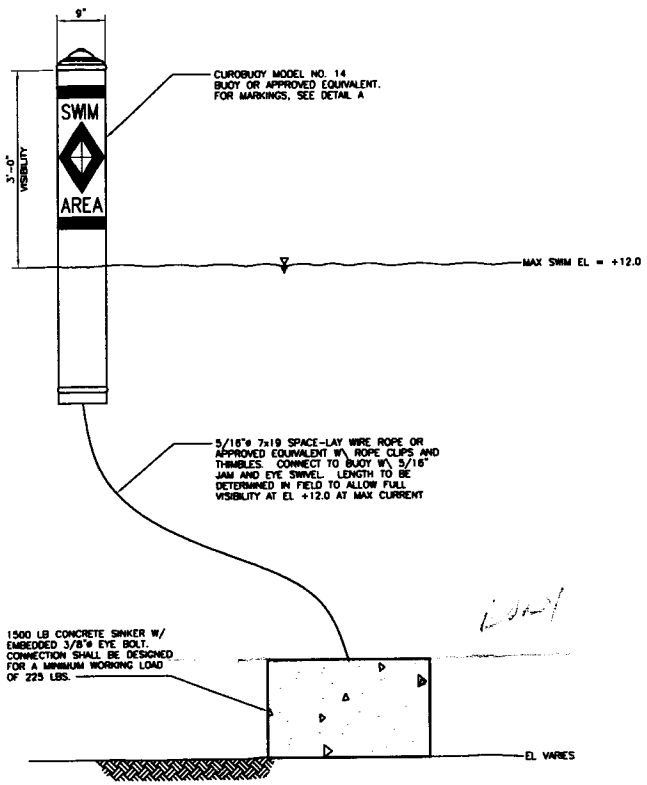

1/S15 REGULAR BUOY
SCALE: NOT TO SCALE

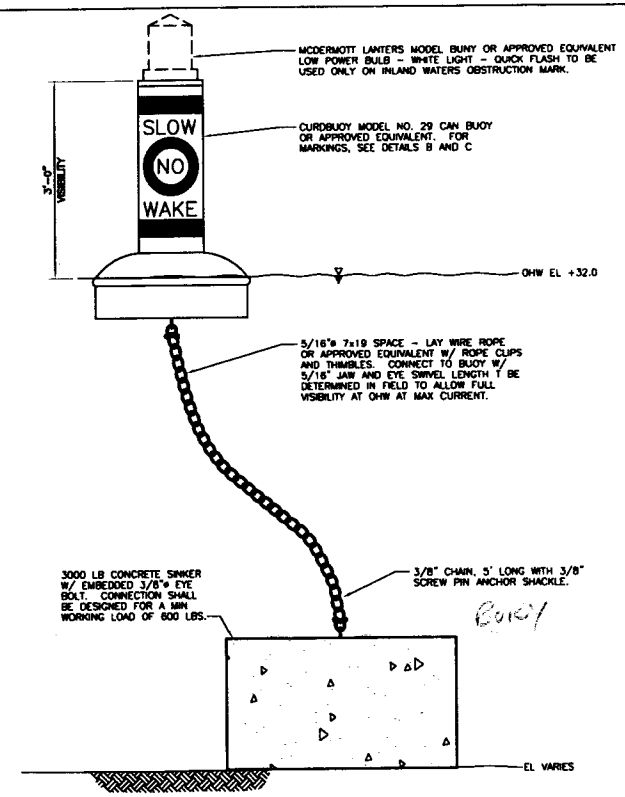

2/S15 CAN BUOY
SCALE: NOT TO SCALE

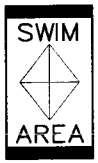

A/S15 DETAIL - BOAT EXCLUSION AREA
SCALE: NOT TO SCALE

B/S15 DETAIL - CONTROLLED AREA
SCALE: NOT TO SCALE

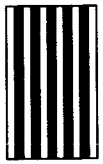

NOTE:
ALL MARKINGS SHALL CONFORM TO US COAST GUARD US AIDS TO NAVIGATION SYSTEM REQUIREMENTS.

C/S15 DETAIL - OBSTRUCTION MARK
SCALE: NOT TO SCALE

PURPOSE: TO CONSTRUCT AND IMPROVE A RIVERFRONT PUBLIC PARK

DATUM: NGVD 29-47
LAT: 45°33'58" LON: -122°20'25"

ADJACENT PROPERTY OWNERS:

DETAILS

VANCOUVER - CLARK PARKS AND RECREATION DEPARTMENT
CAPTAIN WILLIAM CLARK PARK AT COTTONWOOD BEACH, PHASE I

200400143

PROPOSED: CONSTRUCT NEW PARK FACILITIES INCLUDING TRAILS, RESTROOMS, CAMPING SITES, PICNIC SITES, FIXED AND FLOATING DOCKS

IN: CITY OF WASHOUGAL
AT: COLUMBIA RIVER MILE 123.2 TO 124.6, SEC 16, T1N, R4E
COUNTY OF: CLARK STATE: WA
APPLICATION BY: VANCOUVER - CLARK PARKS

FIGURE 22 OF 25 DATE: JULY 28, 2004

File Name: O:\Data\TWC\CLIENTS\Vanc-Clark Parks\Cottonwood Beach Phase 1\Autocad\April 2004 revisions\Revised Permit Set for Corp 072104/sheet22.dwg

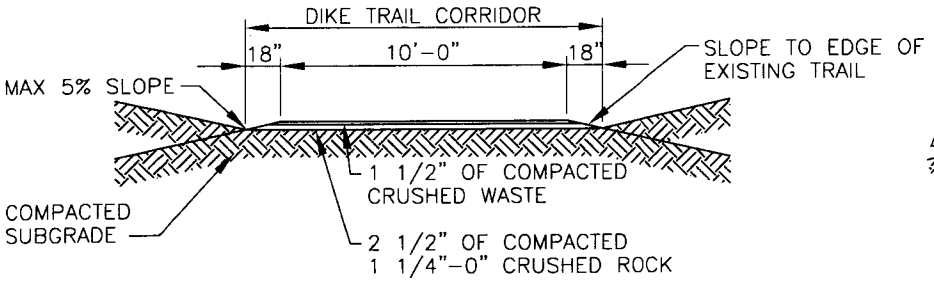

RESURFACED 10-FOOT DIKE TRAIL

SCALE: NOT TO SCALE

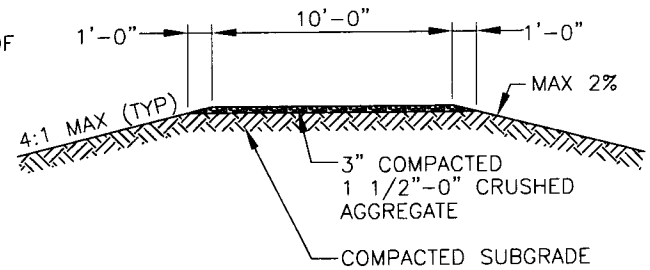

GRAVEL SERVICE ROAD

SCALE: NOT TO SCALE

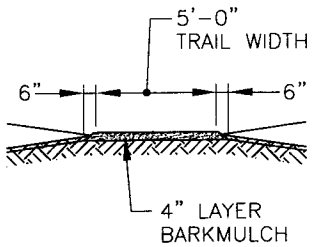

BARKMULCH TRAIL

SCALE: NOT TO SCALE

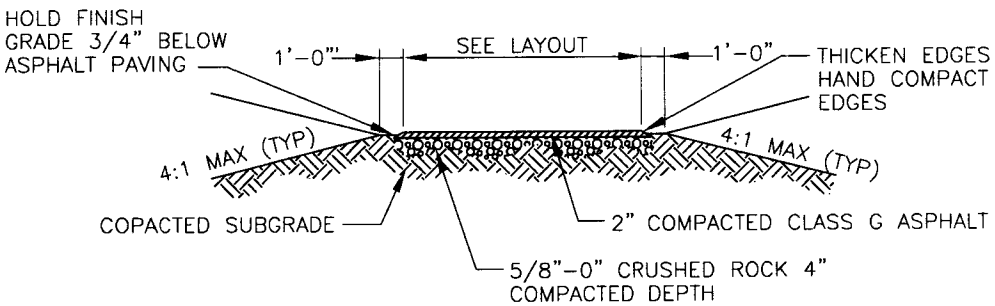

ASPHALT TRAIL PAVING DETAIL

SCALE: NOT TO SCALE

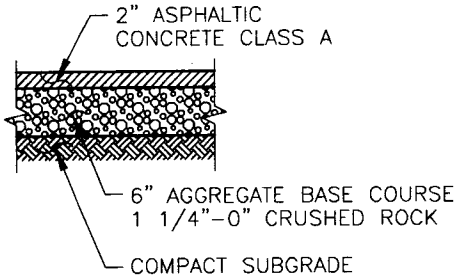

PARKING AREAS & DRIVEWAY PAVEMENT SECTION

SCALE: NOT TO SCALE

CAPT. WILLIAM CLARK PARK AT COTTONWOOD BEACH, PHASE I - PERMIT APPLICATION COE No.

PURPOSE: TO CONSTRUCT AND IMPROVE A RIVERFRONT PUBLIC PARK

DATUM: NGVD 29-47
LAT: 45°33'58" LON: -122°20'25"

ADJACENT PROPERTY OWNERS:

PAVING & SURFACING DETAILS

VANCOUVER - CLARK PARKS AND RECREATION DEPARTMENT
CAPTAIN WILLIAM CLARK PARK AT COTTONWOOD BEACH, PHASE I

200400143

PROPOSED: CONSTRUCT NEW PARK FACILITIES INCLUDING TRAILS, RESTROOMS, CAMPING SITES, PICNIC SITES, FIXED AND FLOATING DOCKS

IN: CITY OF WASHOUGAL
AT: COLUMBIA RIVER MILE 123.2 TO 124.6, SEC 16, T1N, R4E
COUNTY OF: CLARK STATE: WA
APPLICATION BY: VANCOUVER - CLARK PARKS

FIGURE 23 OF 25

DATE: JULY 28, 2004

File Name: O:\Data\TWC\CLIENTS\Vanc-Clark Parks\Cottonwood Beach Phase 1\Autocad\April 2004 revisions\Revised Permit Set for Corp 072104/sheet23.dwg

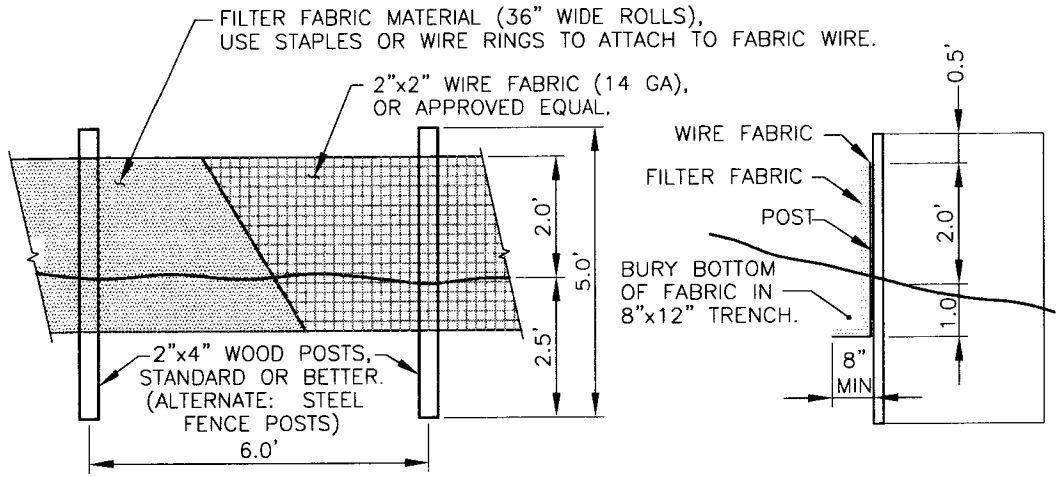

SEDIMENT CONTROL FENCE

SCALE: NOT TO SCALE

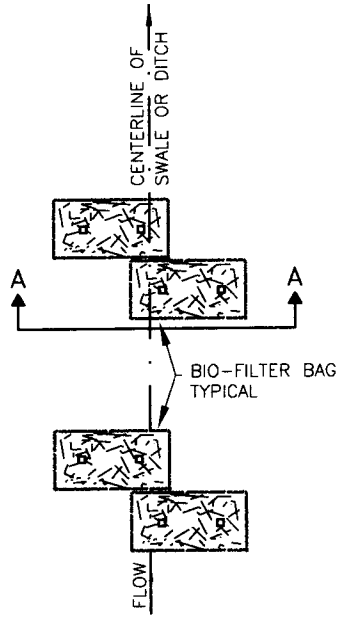

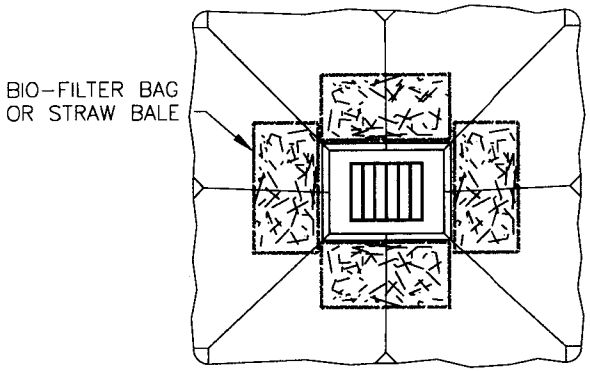

CATCH BASIN PROTECTION

SCALE: NOT TO SCALE BIO-FILTER BAGS/STRAWBALES-TEMPORARY

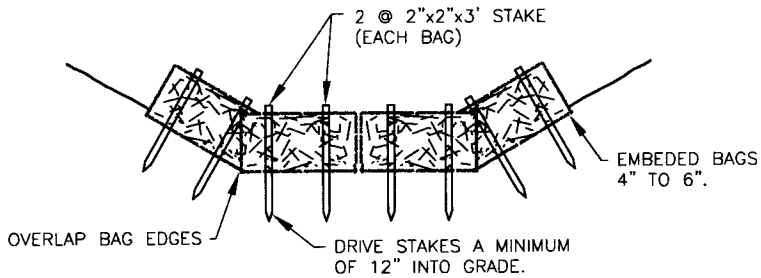

SECTION A-A

HAY BALE & BIO-FILTER BAG

SCALE: NOT TO SCALE SWALE/DITCH SEDIMENT BARRIER

PURPOSE: TO CONSTRUCT AND IMPROVE A RIVERFRONT PUBLIC PARK

DATUM: NGVD 29-47
LAT: 45°33'58" LON: -122°20'25"

ADJACENT PROPERTY OWNERS:

EROSION CONTROL DETAILS

VANCOUVER - CLARK PARKS AND RECREATION DEPARTMENT
CAPTAIN WILLIAM CLARK PARK AT COTTONWOOD BEACH, PHASE I

200400143

PROPOSED: CONSTRUCT NEW PARK FACILITIES INCLUDING TRAILS, RESTROOMS, CAMPING SITES, PICNIC SITES, FIXED AND FLOATING DOCKS

IN: CITY OF WASHOUGAL
AT: COLUMBIA RIVER MILE 123.2 TO 124.6, SEC 16, T1N, R4E
COUNTY OF: CLARK STATE: WA
APPLICATION BY: VANCOUVER - CLARK PARKS

FIGURE 24 OF 25 DATE: JULY 28, 2004

CAPT. WILLIAM CLARK PARK AT COTTONWOOD BEACH, PHASE I - PERMIT APPLICATION COE No.

File Name: Q:\Data\TWC\CLIENTS\Vanc-Clark Parks\Cottonwood Beach Phase 1\Autocad\April 2004 revisions\Revised Permit Set for Corp 072104/sheet24.dwg

STATE OF WASHINGTON
DEPARTMENT OF ECOLOGY
P.O. Box 47600 • Olympia, Washington 98504-7600
(360) 407-6000 • TDD Only (Hearing Impaired) (360) 407-6006

STATE OF WASHINGTON
DEPARTMENT OF ECOLOGY

Notice of Application for
Water Quality Certification

Date: September 28, 2004

Notice is herby given that a request has been filed with the Department of Ecology, pursuant to the requirements of Section 401 of the federal Clean Water Act of 1977 (PL 95-217), to certify that the project described in the U.S. Army Corps of Engineers Public Notice No. 200400143 will comply with the Sections 301, 302, 303, 306, and 307 of the Act, and with applicable provisions of State and Federal water pollution control laws.

Any person desiring to present views on the project pertaining to compliance with water pollution control laws may do so by providing written comments within 30 days of the above publication date to:

Federal Permit Coordinator
Department of Ecology
SEA Program
Post Office Box 47600
Olympia, Washington 98504-7600