US Army Corps
of Engineers
Seattle District

Public Notice of Application for Permit

Regulatory Branch
Post Office Box 3755
Seattle, Washington 98124-3755
Telephone (206) 764-3495
ATTN: Deborah Knaub, Project Manager

Public Notice Date: October 18, 2004
Expiration Date: November 18, 2004
Reference: 200400622
Name: Chelan County PUD No. 1

Interested parties are hereby notified that an application has been received for a Department of the Army permit in accordance with Section 10 of the Rivers and Harbors Act of March 3, 1899, and Section 404 of the Clean Water Act for certain work described below and shown on the enclosed drawings.

APPLICANT - Public Utility District No.1 of Chelan County
Post Office Box 1231
Wenatchee, Washington 98807-1231
Ms. Jennifer Burns
Telephone: (509) 663-8121

LOCATION – The Chelan Dam, in Lake Chelan, at Chelan, Washington.

WORK –Relocate a pier, which measures 40' by 6'5" and two finger piers, which measure 24' by 4'5" and 26' by 4'5" respectively, for a total coverage of 415 square feet. The pier supports would consist of 8 concrete columns (four 12" diameter and four 18" diameter) and 20 cubic yards (cy) of concrete for four footings placed up to 5' deep. Up to 40 cy of material will be excavated for the footings. An existing 10 cy concrete bulkhead would be removed and the disturbed bank would be stabilized with 10 cy of native rock below the ordinary high water mark (OHWM). The new dock would be attached to an existing abutment, which would be stabilized by the placement of 5 cy of clean angular rock. The relocation of an existing dock is proposed in order to facilitate the installation of a previously authorized floating boat barrier at the Chelan dam. The proposed dock would be constructed 130 ft west and in the same footprint as the existing dock.

PURPOSE – The purpose of the proposed work is to allow the placement, above the OHWM, of the north shore anchor for a previously permitted floating boat barrier at the dam, while maintaining existing recreational boat moorage. The Pier at the existing location interferes with placing the floating boat barrier. The floating boat barrier will provide dam safety (homeland security), as well as safety for boaters.

ADDITIONAL INFORMATION – A previous Department of the Army permit was issued for the installation of the floating boat barrier (Corps reference number 200301361).

ENDANGERED SPECIES - The Endangered Species Act (ESA) of 1973, as amended, requires assessment of potential impacts to listed and proposed species. The Bald eagle (*Haliaeetus leucocephalus*) threatened, Columbia River bull trout (*Salvelinus confluentus*), threatened, and Ute ladies'-tresses (*Spiranthes diluvialis*), threatened in the state of Washington, may occur in the proposed project area. A preliminary determination indicates that the activity may affect, but is not likely to adversely affect endangered or threatened species, or their critical habitat, designated under the Endangered Species Act of 1973.

ESSENTIAL FISH HABITAT - The Magnuson-Stevens Fishery Conservation and Management Act (MSA), as amended by the Sustainable Fisheries Act of 1996, requires all Federal agencies to consult with the National Marine Fisheries Service (NMFS) on all actions, or proposed actions, permitted, funded, or undertaken by the agency, that may adversely affect Essential Fish Habitat (EFH). No EFH for Pacific salmon, Groundfish, or Coastal Pelagic Species occurs in the project area. Therefore, no EFH consultation is necessary.

CULTURAL RESOURCES - The District Engineer has reviewed the latest published version of the National Register of Historic Places, lists of properties determined eligible and other sources of information. Known historic properties occur in the vicinity of the proposed project. However, they do not occur in the permit area. The proposed work is located in the vicinity of the dam, which has been extensively modified by modern development and presents little likelihood for discovery of an undisturbed historic property.

The District Engineer invites responses to this public notice from Native American Nations or tribal governments, Federal, State, and local agencies, historical and archeological societies, and other parties likely to have knowledge of or concerns with historic properties in the area.

PUBLIC HEARING - Any person may request, in writing, within the comment period specified in this notice, that a public hearing be held to consider this application. Requests for public hearings shall state, with particularity, the reasons for holding a public hearing.

EVALUATION - The decision whether to issue a permit will be based on an evaluation of the probable impact, including cumulative impacts of the proposed activity on the public interest. That decision will reflect the national concern for both protection and utilization of important resources. The benefits which reasonably may be expected to accrue from the proposal must be balanced against its reasonably foreseeable detriments. All factors which may be relevant to the proposal will be considered, including the cumulative effects thereof; among those are conservation, economics, aesthetics, general environmental concerns, wetlands, historic properties, fish and wildlife values, flood hazards, floodplain values, land use, navigation, shoreline erosion and accretion, recreation, water supply and conservation, water quality, energy needs, safety, food and fiber production, mineral needs, considerations of property ownership, and, in general, the needs and welfare of the people.

The U.S. Army Corps of Engineers (Corps) is soliciting comments from the public; Federal, Native American Nations or tribal governments, State, and local agencies and officials; and other interested parties in order to consider and evaluate the impacts of this activity. Any comments received will be considered by the Corps to determine whether to issue, modify, condition or deny a permit for the work. To make this decision, comments are used to assess impacts on endangered species, historic properties, water quality, general environmental effects, and the other public interest factors listed above. Comments are used in the preparation of an Environmental Assessment and/or an Environmental Impact Statement pursuant to the National Environmental Policy Act. Comments are also used to determine the need for a public hearing and to determine the overall public interest of the activity.

The evaluation of the impact of the activity on the public interest will include application of the guidelines promulgated by the Administrator, Environmental Protection Agency, under authority of Section 404(b) of the Clean Water Act. This evaluation will include an alternatives analysis.

ADDITIONAL EVALUATION - The State of Washington is reviewing this for compliance with the applicable State and Federal water quality standards pursuant to Section 401 of the Clean Water Act.

COMMENT AND REVIEW PERIOD – Conventional mail or email comments on this public notice will be accepted and made part of the record and will be considered in determining whether it would be in the public interest to authorize this proposal. In order to be accepted, email comments must originate from the author's email account and must include on the subject line of the email message the permit applicant's name and reference number as shown below. All email comments should be sent to Deborah.J.Knaub@nws02.usace.army.mil. Conventional mail comments should be sent to U.S. Army Corps of Engineers, Regulatory Branch, Post Office Box 3755, Seattle, Washington, 98124-3755. Both conventional mail or email comments must include the permit applicant's name and reference number, as shown below, and the commentor's name, address, and phone number. All comments whether conventional mail or email must reach this office, no later than the expiration date of this public notice to ensure consideration. Please include the following name and reference number:

Chelan County PUD No. 1, 200400622

Encl
Drawings (5)

CHELAN DAM FOREBAY BOAT BARRIER

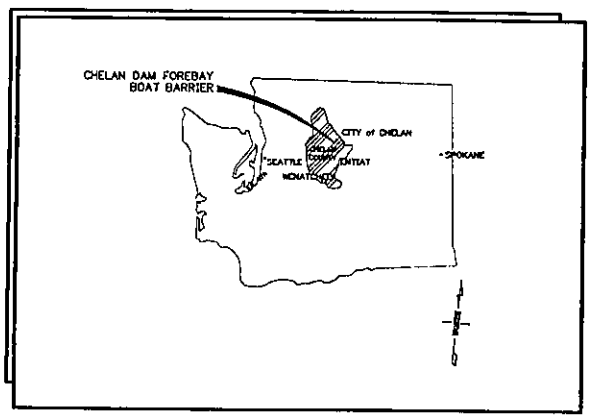

LOCATION MAP
NOT TO SCALE

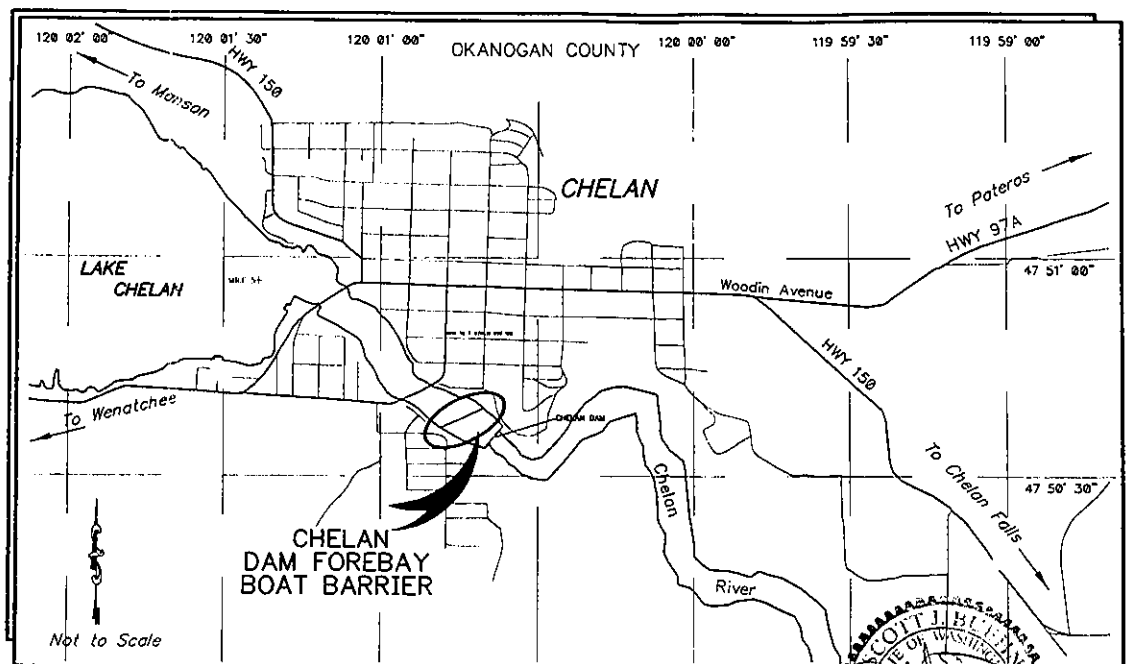

VICINITY MAP
NOT TO SCALE

SCOTT J. BUTLER
STATE OF WASHINGTON
REGISTERED PROFESSIONAL ENGINEER
3-11-04
EXPIRES 8/08/04

POWER
CEII CLASSIFIED DOCUMEN
CONFIDENTIAL AND PROPRIET
INFORMATION OF
CHELAN COUNTY PUD#1
DO NOT COPY OR DISSEMINA
WITHOUT PUD APPROVAL

Reference: 200400622	**Purpose:** Allow installation of a
Appl. By: Chelan Co. PUD No. 1	floating boat barrier/boat moorage
Proposed: Relocate pier & place fill	**In:** Lake Chelan **At:** Chelan
for the purposes of bank stabilization	**County:** Chelan **State:** WA
Date: September 21, 2004	**Page** 1 of 5

PUBLIC UTILITY DISTRICT NO. 1 OF CHELAN COUNTY
WENATCHEE, WASHINGTON
P.U.D.

FOR SMALL WORKS PROJECT 04-SW08
Chelan Hydro
CHELAN DAM FOREBAY BOAT BARRIER
LOCATION & INDEX TO DRAWINGS

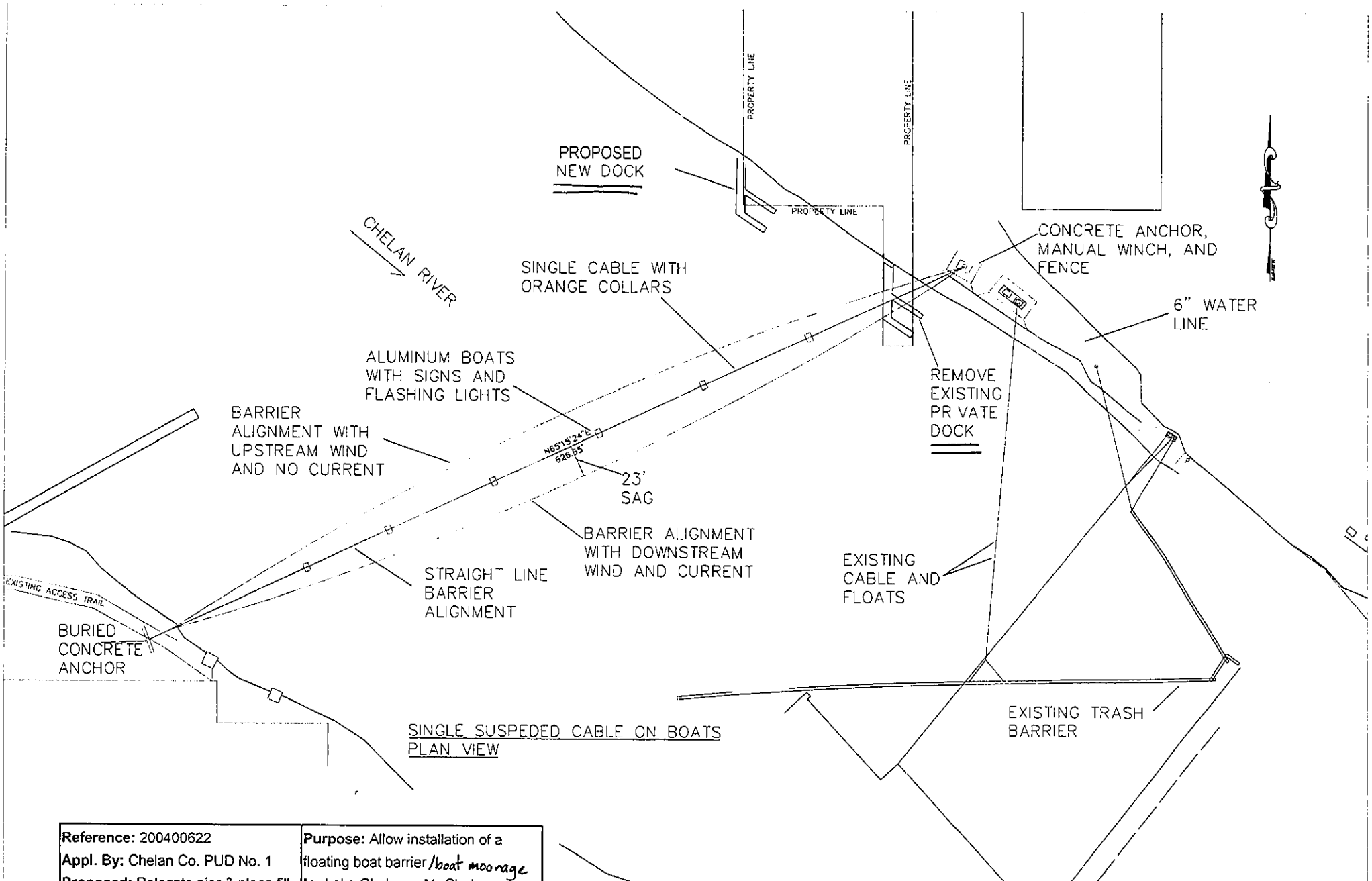

Reference: 200400622	**Purpose:** Allow installation of a
Appl. By: Chelan Co. PUD No. 1	floating boat barrier /boat moorage
Proposed: Relocate pier & place fill	**In:** Lake Chelan **At:** Chelan
for the purposes of bank stabilization	**County:** Chelan **State:** WA
Date: September 21, 2004	**Page** 2 of 5

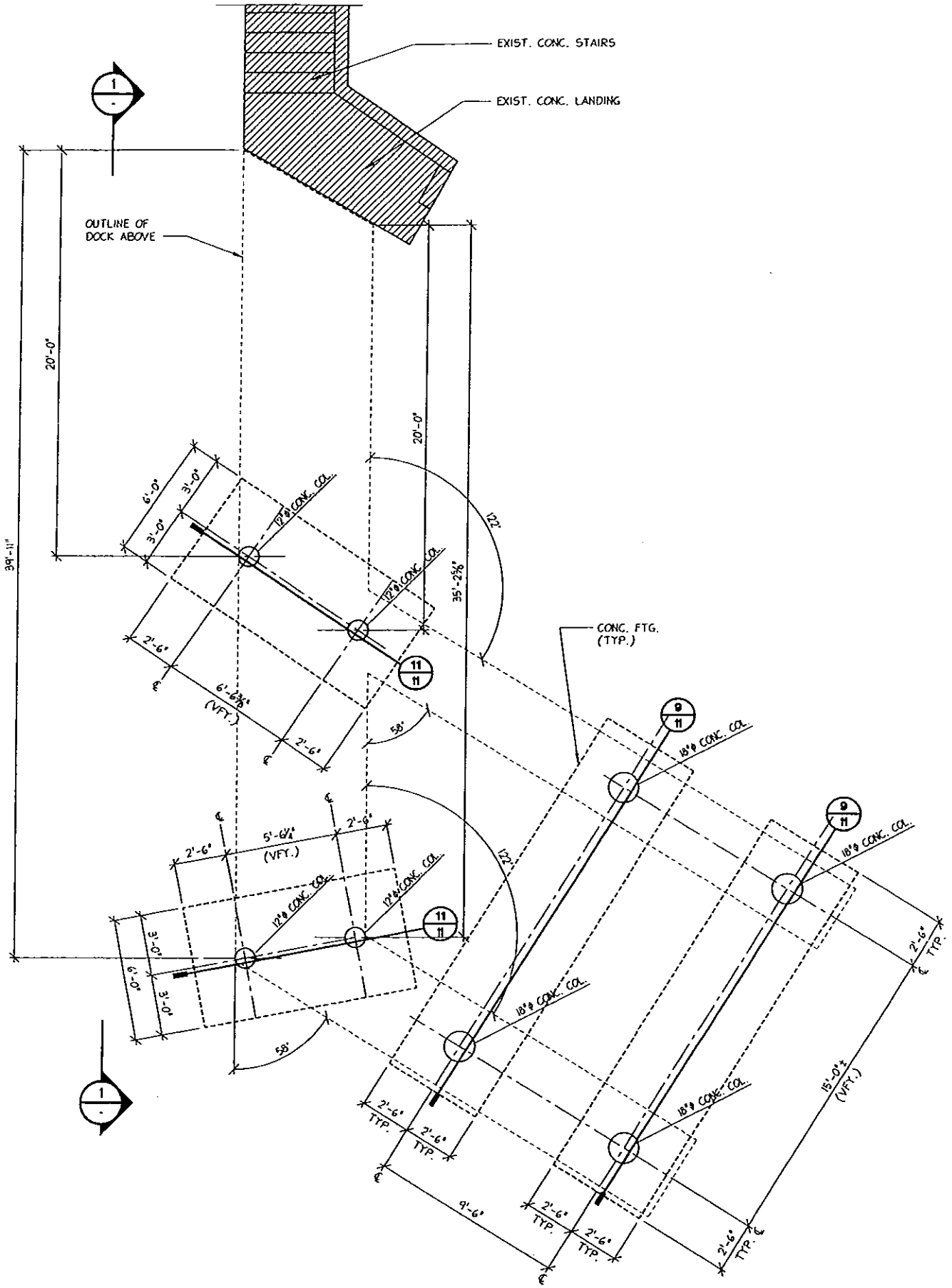

N

PROPOSED PIER FOUNDATION PLAN

Reference: 200400622	**Purpose:** Allow installation of a floating boat barrier/boat moorage
Appl. By: Chelan Co. PUD No. 1	**In:** Lake Chelan **At:** Chelan
Proposed: Relocate pier & place fill for the purposes of bank stabilization	**County:** Chelan **State:** WA
Date: September 21, 2004	**Page** 3 of 5

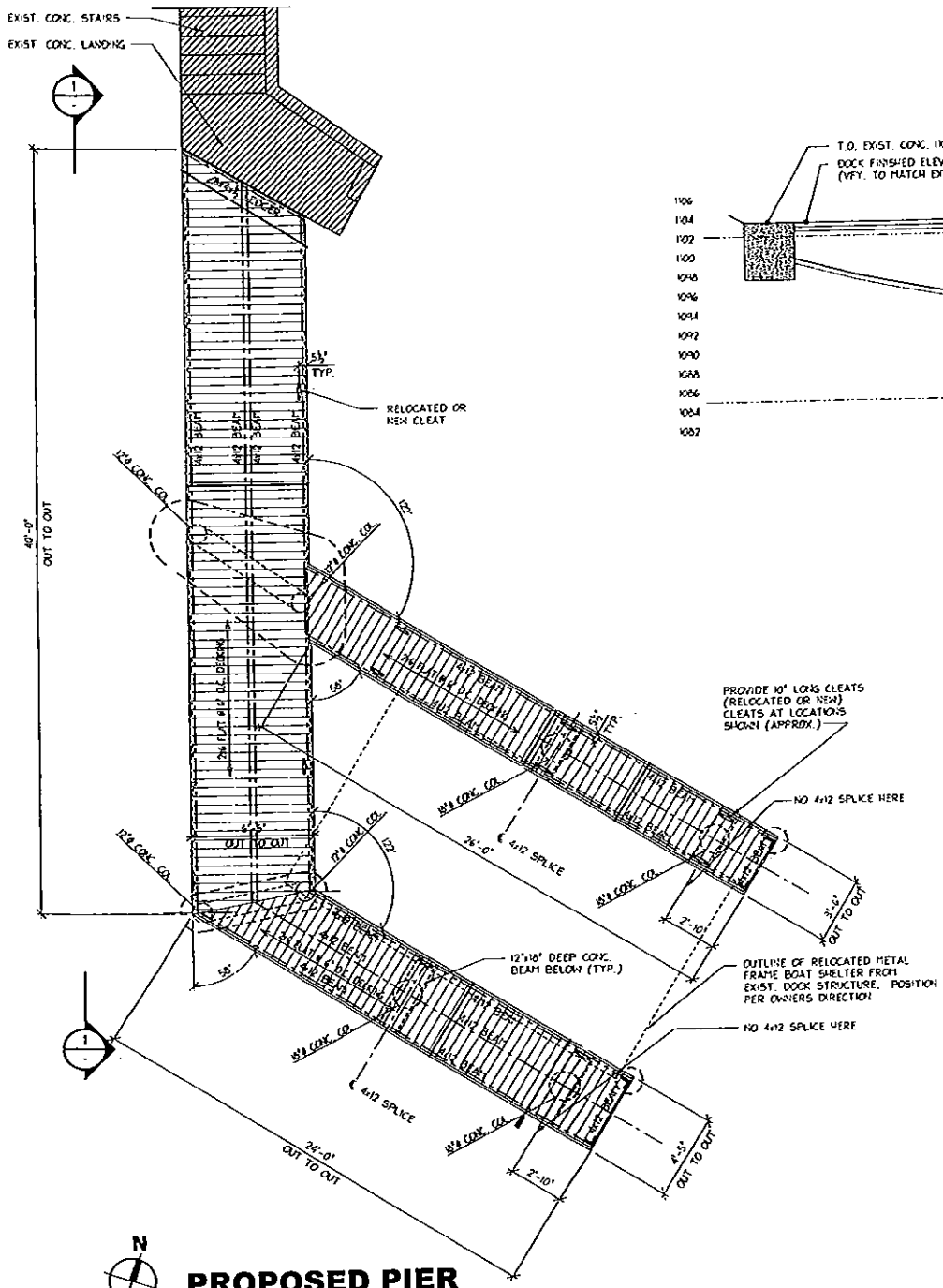

PROPOSED PIER FRAMING PLAN

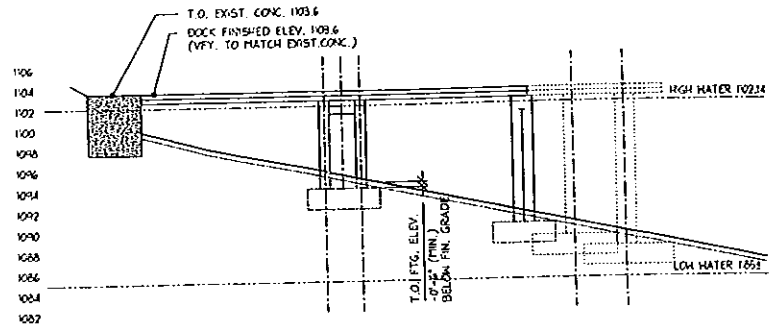

1 SECTION

PLAN NOTES:

1. CONTRACTOR SHALL VERIFY ALL EXISTING DIMENSIONS AND CONDITIONS BEFORE PROCEEDING WITH THE WORK. ALL CONSTRUCTION DOCUMENTS SHOWING EXISTING CONSTRUCTION ARE INTENDED AS GUIDELINES ONLY. ALL DIMENSIONS MUST BE VERIFIED AND/OR DETERMINED IN THE FIELD.
2. THE CONSTRUCTION DOCUMENTS MAY NOT SHOW SOME OBSTRUCTIONS. EVEN THOUGH NOT SHOWN OR SPECIFICALLY MENTIONED, THE REMOVAL AND REPLACEMENT OF MINOR OBSTRUCTIONS SHOULD BE ANTICIPATED AND ACCOMPLISHED.
3. CONTRACTOR SHALL PROVIDE TEMPORARY BRACING AND/OR SHORING OF THE STRUCTURE AND STRUCTURAL COMPONENTS UNTIL ALL FINAL CONNECTIONS HAVE BEEN COMPLETED IN ACCORDANCE WITH THE CONSTRUCTION DOCUMENTS.
4. SEE STRUCTURAL NOTES (SHEET 12) FOR ADDITIONAL INFORMATION
5. KNOWN EXISTING CONSTRUCTION THAT MUST BE REMOVED & DISPOSED OF OFF-SITE AT THE NEW DOCK LOCATION INCLUDES EXISTING FOOTINGS. SIZE AND CONFIGURATION IS UNKNOWN. FOR BIDDING PURPOSES, ASSUME SIZE OF EXISTING FOOTING IS APPROXIMATELY EQUAL TO NEW FOOTINGS SHOWN ON DRAWINGS.

FOR SMALL WORKS PROJECT 04-SW-08 PED FILE

PUBLIC UTILITY DISTRICT NO. 1 OF CHELAN COUNTY
WENATCHEE, WASHINGTON

Chelan Hydro
CHELAN DAM FOREBAY BOAT BARRIER
DOCK PLANS AND SECTION

Drafting General ID: 003748161 ORIGINAL DWG.

Reference: 200400622	**Purpose:** Allow installation of a
Appl. By: Chelan Co. PUD No. 1	floating boat barrier boat moorage
Proposed: Relocate pier & place fill	**In:** Lake Chelan **At:** Chelan
for the purposes of bank stabilization	**County:** Chelan **State:** WA
Date: September 21, 2004	**Page** 4 of 5

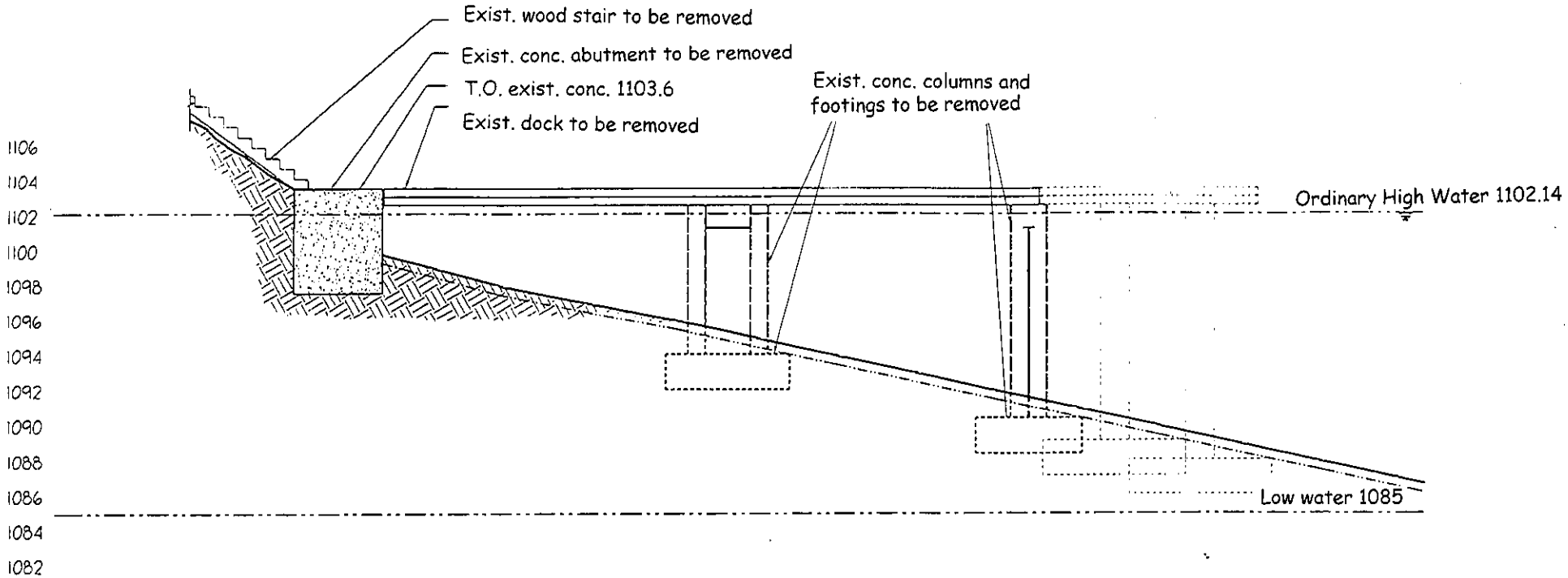

1 SECTION - EXISTING

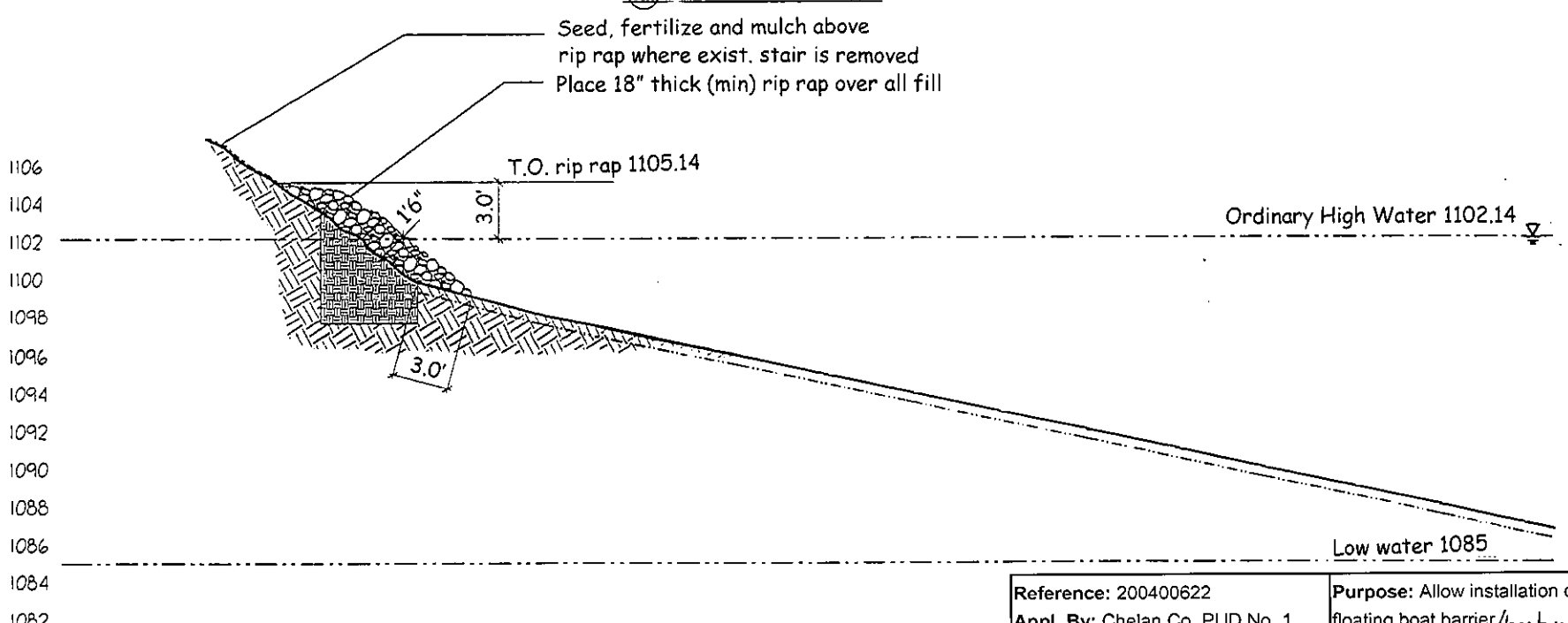

2 SECTION - PROPOSED

Reference: 200400622	**Purpose:** Allow installation of a floating boat barrier/boat moorage
Appl. By: Chelan Co. PUD No. 1	**In:** Lake Chelan **At:** Chelan
Proposed: Relocate pier & place fill for the purposes of bank stabilization	**County:** Chelan **State:** WA
Date: September 21, 2004	**Page** 5 of 5

STATE OF WASHINGTON
DEPARTMENT OF ECOLOGY
P.O. Box 47600 • Olympia, Washington 98504-7600
(360) 407-6000 • TDD Only (Hearing Impaired) (360) 407-6006

STATE OF WASHINGTON
DEPARTMENT OF ECOLOGY

Notice of Application for
Water Quality Certification

Date: October 18, 2004

Notice is herby given that a request has been filed with the Department of Ecology, pursuant to the requirements of Section 401 of the federal Clean Water Act of 1977 (PL 95-217), to certify that the project described in the U.S. Army Corps of Engineers Public Notice No. 200400622 will comply with the Sections 301, 302, 303, 306, and 307 of the Act, and with applicable provisions of State and Federal water pollution control laws.

Any person desiring to present views on the project pertaining to compliance with water pollution control laws may do so by providing written comments within 30 days of the above publication date to:

Federal Permit Coordinator
Department of Ecology
SEA Program
Post Office Box 47600
Olympia, Washington 98504-7600