US Army Corps
of Engineers
Seattle District

Public Notice of Application for Permit

Regulatory Branch
Post Office Box 3755
Seattle, Washington 98124-3755
Telephone (206) 764-3495
ATTN: Joe Brock, Project Manager

Public Notice Date: October 5, 2004
Expiration Date: November 5, 2004
Reference: 200400964
Name: USDI (Bureau of Reclamation)

Interested parties are hereby notified that an application has been received for a Department of the Army permit in accordance with Section 404 of the Clean Water Act for certain work described below and shown on the enclosed drawings.

APPLICANT – U.S. Bureau of Reclamation
David Kaumheimer, Environmental Program Manager
Upper Columbia Area Office
1917 Marsh Road
Yakima, Washington 98901
Telephone: (509) 575-5848 ext. 232

LOCATION – In the Yakima River near Cle Elum, Kittitas County, Washington. The project site is located in the SW ¼ of Section 11, T. 19 N., R. 16 E.

WORK – Place 36 cubic yards of fill material to construct two portage ramps and to anchor a buoy line. Temporarily place 40 cubic yards of fill material (sandbags) to construct cofferdams around each portage ramp work site.

PURPOSE – The purpose of the project is to improve public boating safety.

ADDITIONAL INFORMATION – The KRD 1146 Wasteway discharges water to the Yakima River from September to October creating a hazardous condition to the public. The buoy line would be installed and removed each year and would be in place from September to October. Warning signs would be installed upstream of the plunge pool area. The proposed portage ramps would be constructed upstream and downstream of the plunge pool area and would be connected by an upland trail. Each ramp would be 12 feet wide and constructed of pre-cast concrete planks. To allow larger watercraft to pass, the buoy line would not extend across the entire river.

ENDANGERED SPECIES – The Endangered Species Act (ESA) of 1973 requires assessment of potential impacts to listed and proposed species. The Columbia River bull trout (Salvelinus confluentus), threatened, Middle Columbia River steelhead (Oncorhynchus mykiss), threatened, Bald eagle (Haliaeetus leucocephalus), Ute ladies'-tresses (Spiranthes diluvialis), threatened, have been listed in the state of Washington, and may occur in the proposed project area. For bull trout critical habitat has been designated. The U.S. Bureau of Reclamation, as the lead agency for ESA consultation, will consult with the National Marine Fisheries Service and/or the U.S. Fish and Wildlife Service as required under Section 7 of the ESA.

The Magnuson-Stevens Fishery Conservation and Management Act (MSA), as amended by the Sustainable Fisheries Act of 1996, requires all Federal agencies to consult with the National Marine Fisheries Service (NMFS) on all actions, or proposed actions, permitted, funded, or undertaken by the agency, that may adversely affect Essential Fish Habitat (EFH). EFH for Pacific salmon occurs in the project area. The proposed action would impact approximately 0.05 acres of EFH for these species. The U.S. Bureau of Reclamation as the lead agency for a determination regarding EFH, will consult with the National Marine Fisheries Services if necessary.

CULTURAL RESOURCES - The U.S. Bureau of Reclamation, as the lead agency for determining compliance with Section 106 of the National Historic Preservation Act, will consult with the State Historic Preservation Office as appropriate.

PUBLIC HEARING - Any person may request, in writing, within the comment period specified in this notice, that a public hearing be held to consider this application. Requests for public hearings shall state, with particularity, the reasons for holding a public hearing.

EVALUATION - The decision whether to issue a permit will be based on an evaluation of the probable impact, including cumulative impacts of the proposed activity on the public interest. That decision will reflect the national concern for both protection and utilization of important resources. The benefits which reasonably may be expected to accrue from the proposal must be balanced against its reasonably foreseeable detriments. All factors which may be relevant to the proposal will be considered, including the cumulative effects thereof; among those are conservation, economics, aesthetics, general environmental concerns, wetlands, historic properties, fish and wildlife values, flood hazards, floodplain values, land use, navigation, shoreline erosion and accretion, recreation, water supply and conservation, water quality, energy needs, safety, food and fiber production, mineral needs, considerations of property ownership, and, in general, the needs and welfare of the people.

The U.S. Army Corps of Engineers (Corps) is soliciting comments from the public; Federal, Native American Nations or tribal governments, State, and local agencies and officials; and other interested parties in order to consider and evaluate the impacts of this activity. Any comments received will be considered by the Corps to determine whether to issue, modify, condition or deny a permit for the work. To make this decision, comments are used to assess impacts on endangered species, historic properties, water quality, general environmental effects, and the other public interest factors listed above. Comments are used in the preparation of an Environmental Assessment and/or an Environmental Impact Statement pursuant to the National Environmental Policy Act. Comments are also used to determine the need for a public hearing and to determine the overall public interest of the activity.

The evaluation of the impact of the activity on the public interest will include application of the guidelines promulgated by the Administrator, Environmental Protection Agency, under authority of Section 404(b) of the Clean Water Act. This evaluation will include an alternatives analysis.

ADDITIONAL EVALUATION - The State of Washington is reviewing this work for compliance with the applicable State and Federal water quality standards pursuant to Section 401 of the Clean Water Act.

This proposal is subject to a Shorelines Substantial Development Permit determination by Kittitas County.

COMMENT AND REVIEW PERIOD – Conventional mail or email comments on this public notice will be accepted and made part of the record and will be considered in determining whether it would be in the public interest to authorize this proposal. In order to be accepted, email comments must originate from the author's email account and must include on the subject line of the email message the permit applicant's name and reference number as shown below. All email comments should be sent to Joseph.W.Brock@nws02.usace.army.mil. Conventional mail comments should be sent to U.S. Army Corps of Engineers, Regulatory Branch, ATTN: Joe Brock, P.O. Box 3755, Seattle, Washington, 98124-3755. Both conventional mail or email comments must include the permit applicant's name and reference number, as shown below, and the commentor's name, address, and phone number. All comments whether conventional mail or email must reach this office, no later than the expiration date of this public notice to ensure consideration. Please include the following name and reference number:

USDI (Bureau of Reclamation), 200400964

Encl
Drawings (6)

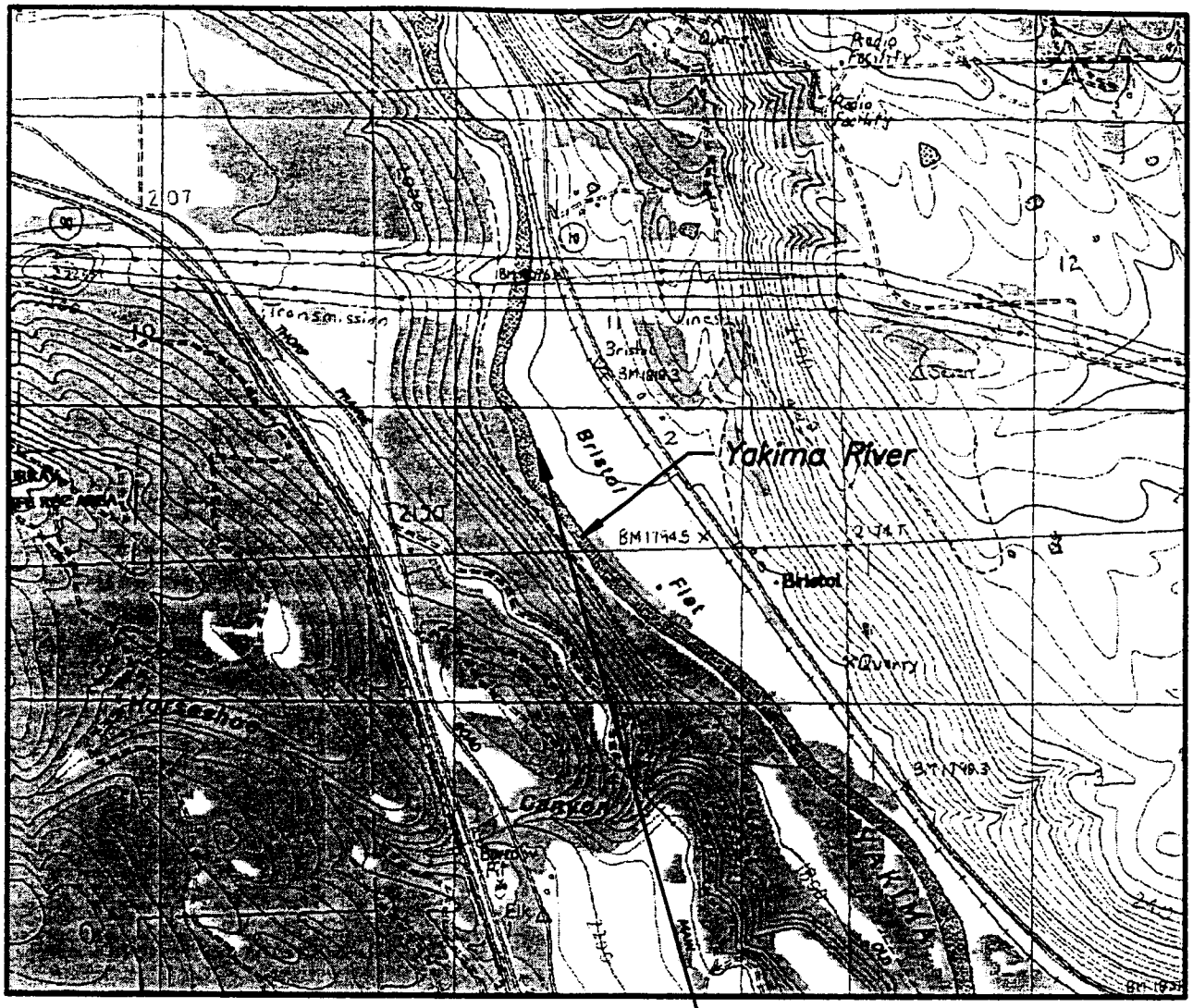

Project Site

N

2000 0 2000 4000 6000

SCALE OF FEET

PROJECT LOCATION

SW 1/4, SEC. 11, T19N, R16E, W.M. MERIDIAN
Lat.: 47° 08.88' N; Long.: 120 48.45' W
Project site is located 8 miles southeast of Cle Elum, WA

Corps Reference: 200400964

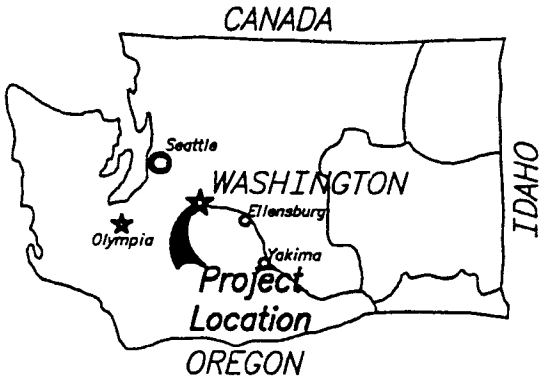

NAME:	Bureau of Reclamation	REFERENCE #:	200400964
PURPOSE:	To warn watercraft of possible danger and provide a safe route around the 1146 Wasteway.	PROPOSED:	Install boulders in the Yakima River to anchor a buoy line. Construct portage ramps
DATUM:	NGVD NAD 27	IN:	Yakima River
ADJACENT PROPERTY OWNERS:	Wallace Ranch Partnership	NEAR:	Thorp
SHEET 1 of	6	COUNTY:	Kittitas

DATE: SEPT 23, 2004

PLOTTED BY USER

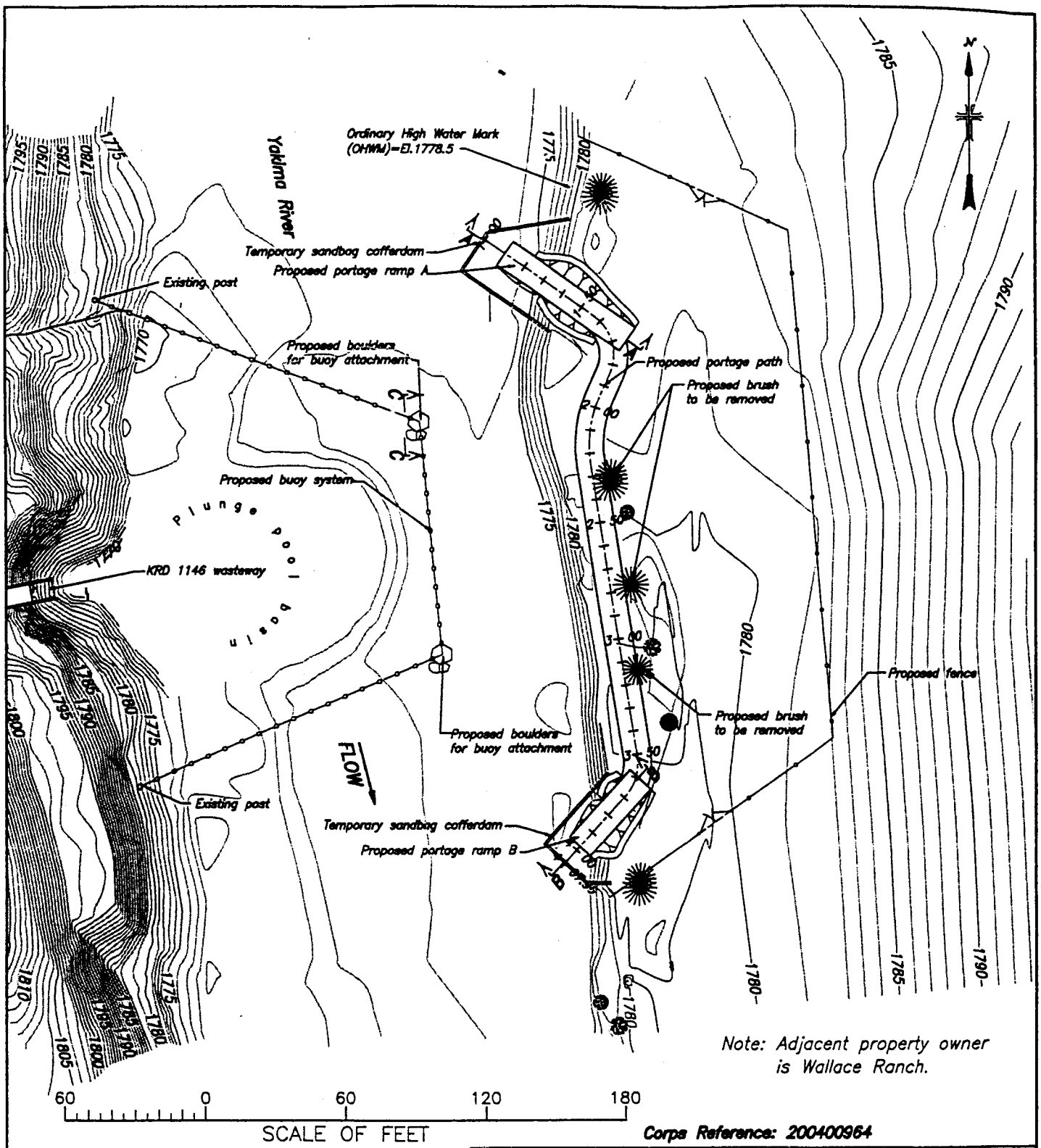

Corps Reference: 200400964

NAME:	Bureau of Reclamation	REFERENCE #:	200400964
PURPOSE:	To warn watercraft of possible danger and provide a safe route around the 1146 Wasteway	PROPOSED:	Install boulders in the Yakima River to anchor a buoy line. Construct portage ramps
DATUM:	NGVD NAD 27	IN:	Yakima River
ADJACENT PROPERTY OWNERS:	Wallace Ranch Partnership	NEAR:	Thorp
SHEET 2 of	6	COUNTY:	Kittitas

DATE SEPT 23, 2004

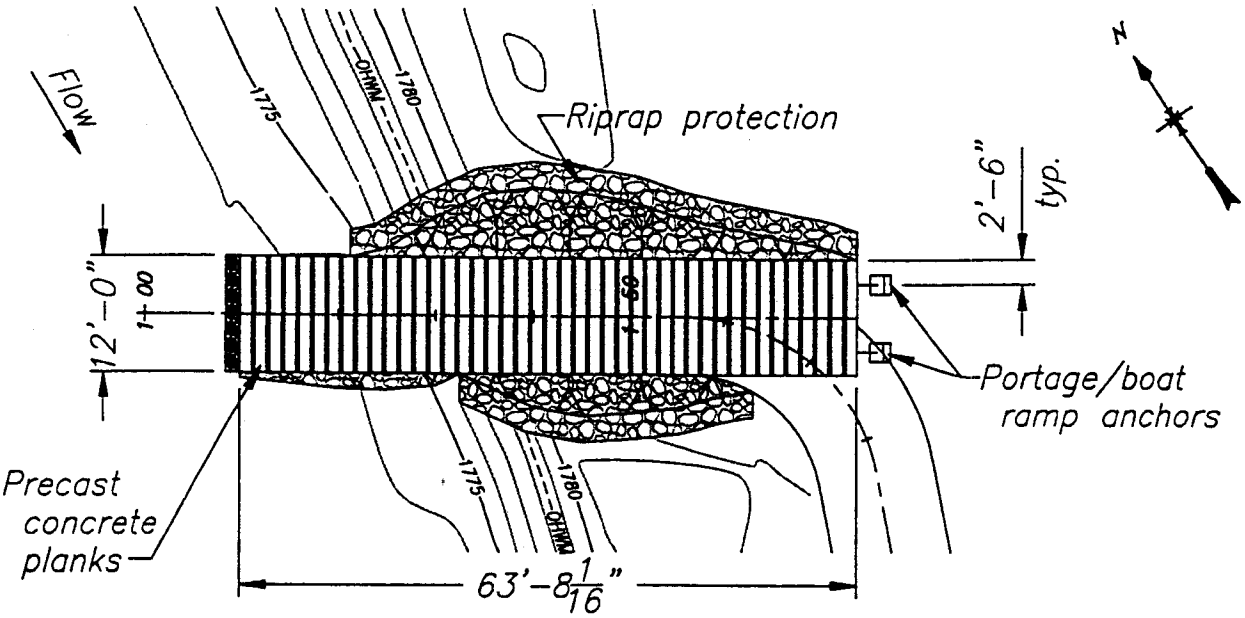

PLAN – PORTAGE RAMP A

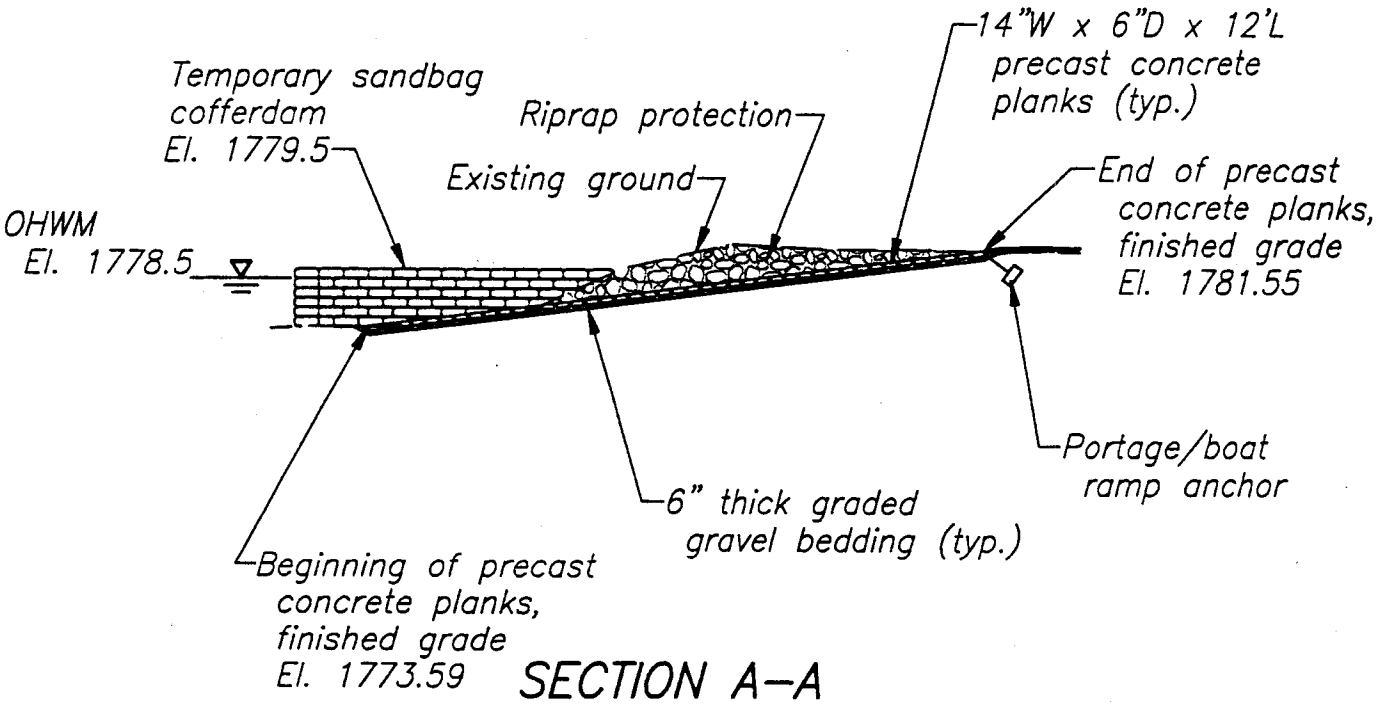

SECTION A–A

20 0 20 40 60

SCALE OF FEET

Corps Reference: 200400964

NAME:	Bureau of Reclamation	REFERENCE #:	200400964
PURPOSE:	To warn watercraft of possible danger and provide a safe route around the 1146 Wasteway	PROPOSED:	Install boulders in the Yakima River to anchor a buoy line. Construct portage ramps
DATUM:	NGVD NAD 27	IN:	Yakima River
ADJACENT PROPERTY OWNERS:	Wallace Ranch Partnership	NEAR:	Thorp
SHEET 3 of	6	COUNTY:	Kittitas
DATE:	SEPT 23, 2004		

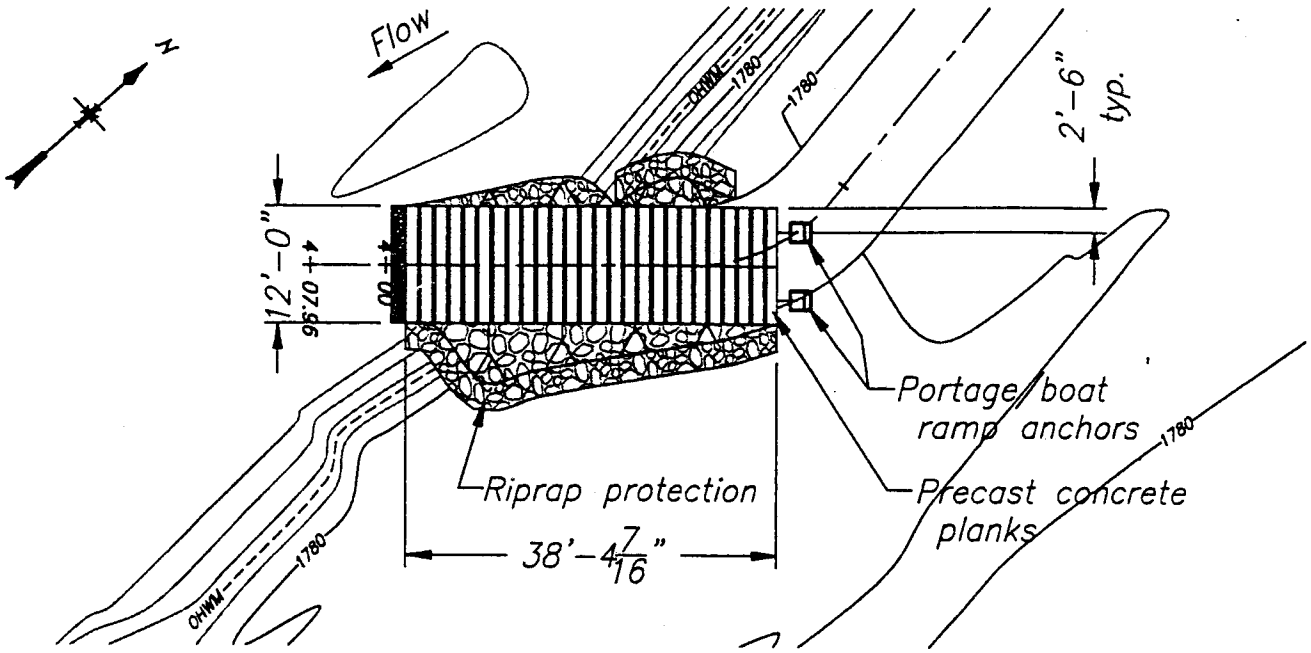

PLAN – PORTAGE RAMP B

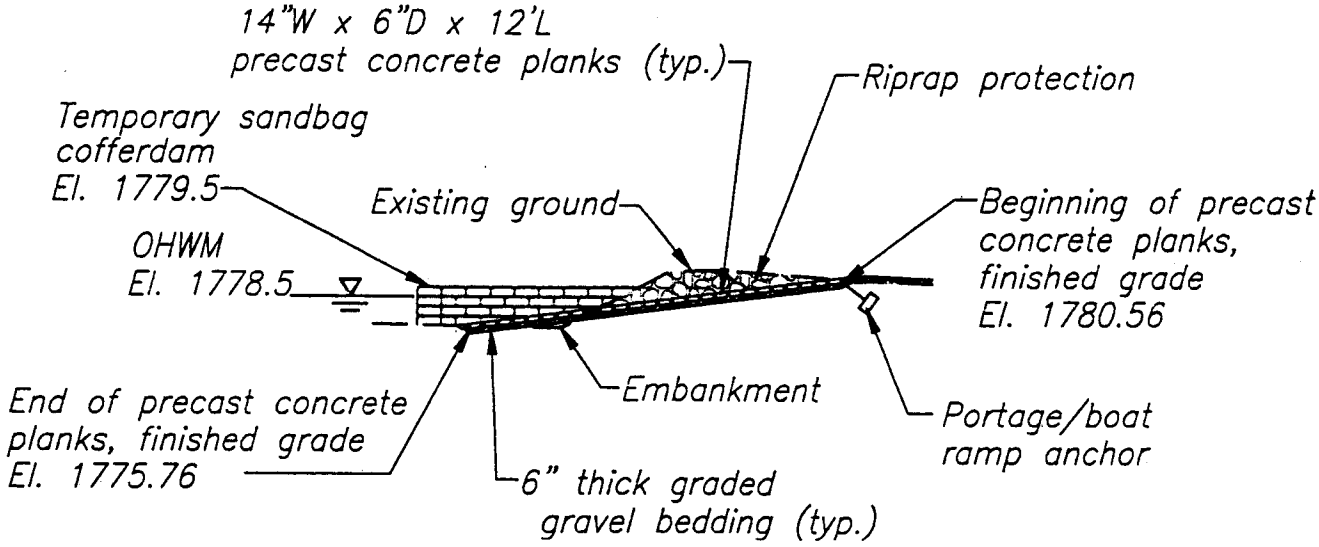

SECTION B–B

20 0 20 40 60

SCALE OF FEET

Corps Reference: 200400964

NAME:	Bureau of Reclamation	REFERENCE #:	200400964
PURPOSE:	To warn watercraft of possible danger and provide a safe route around the 1146 Wasteway	PROPOSED:	Install boulders in the Yakima River to anchor a buoy line. Construct portage ramps
DATUM:	NGVD NAD 27	IN:	Yakima River
ADJACENT PROPERTY OWNERS:	Wallace Ranch Partnership	NEAR:	Thorp
SHEET 4 of	6	COUNTY:	Kittitas
DATE:	SEPT 23, 2004		

QUANTITIES BELOW OHWM (1778.5) FOR PORTAGE RAMP A

Excavation:

Alluvial sands, gravels, and cobbles . . . . . 1 yd^3

Backfill:

Alluvial gravel . . . . . 3 yd^3
Well graded riprap (1" to 18") . . . . . 5 yd^3
Precast concrete plank . . . . . 5 yd^3
*Sandbag cofferdam. . . . . 25 yd^3

QUANTITIES BELOW OHWM (1778.5) FOR PORTAGE RAMP B

Excavation:

Alluvial sands, gravels, and cobbles . . . . . 3 yd^3

Backfill:

Alluvial gravel . . . . . 3 yd^3
Well graded riprap (1" to 18") . . . . . 5 yd^3
Precast concrete plank . . . . . 5 yd^3
*Sandbag cofferdam. . . . . 15 yd^3

*Temporary to be removed

Corps Reference: 200400964

NAME:	Bureau of Reclamation	REFERENCE #:	200400964
PURPOSE:	To warn watercraft of possible danger and provide a safe route around the 1146 Wasteway	PROPOSED:	Install boulders in the Yakima River to anchor a buoy line. Construct portage ramps
DATUM:	NGVD NAD 27	IN:	Yakima River
ADJACENT PROPERTY OWNERS:	Wallace Ranch Partnership	NEAR:	Thorp
SHEET 5 of	6	COUNTY:	Kittitas
DATE:	SEPT 23, 2004		

PLOTTED BY USER

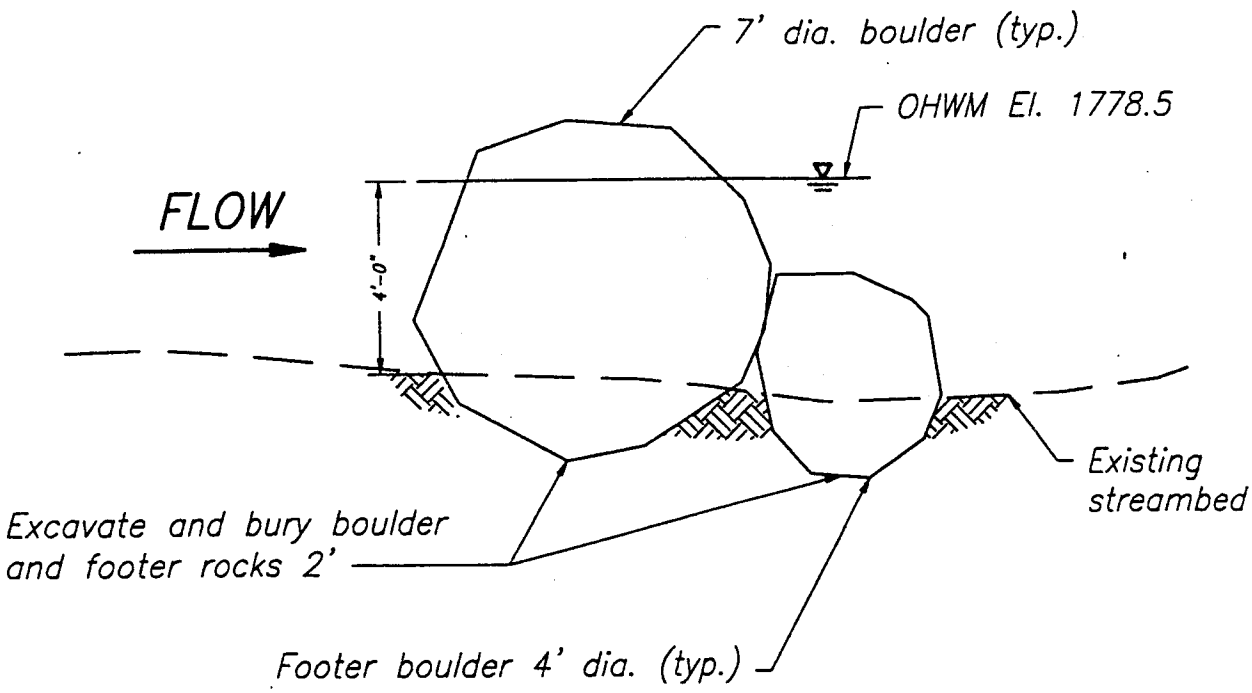

SECTION C–C

SECTION OF BUOY ATTACHMENT BOULDERS
(2 locations)

4 0 4 8 12
SCALE OF FEET

QUANTITIES OF ROCK PLACEMENT BELOW OHWM (1778.5)

Excavation:

Alluvial sands, gravels, and cobbles . . . . . 8 yd^3

Backfill:

Alluvial gravel . . . . . 2 yd^3

Buoy attachment boulders . . . . . 18 yd^3

Corps Reference: 200400964

NAME:	Bureau of Reclamation	REFERENCE #:	200400964
PURPOSE:	To warn watercraft of possible danger and provide a safe route around the 1146 Wasteway	PROPOSED:	Install boulders in the Yakima River to anchor a buoy line. Construct portage ramps
DATUM:	NGVD NAD 27	IN:	Yakima River
ADJACENT PROPERTY OWNERS:	Wallace Ranch Partnership	NEAR:	Thorp
SHEET 6 of	6	COUNTY:	Kittitas
DATE:	SEPT 23, 2004		

* Temporary to be removed

PLOTTED BY USER

STATE OF WASHINGTON

DEPARTMENT OF ECOLOGY

P.O. Box 47600 • Olympia, Washington 98504-7600
(360) 407-6000 • TDD Only (Hearing Impaired) (360) 407-6006

STATE OF WASHINGTON
DEPARTMENT OF ECOLOGY

Notice of Application for
Water Quality Certification

Date: October 5, 2004

Notice is herby given that a request has been filed with the Department of Ecology, pursuant to the requirements of Section 401 of the federal Clean Water Act of 1977 (PL 95-217), to certify that the project described in the U.S. Army Corps of Engineers Public Notice No. 200400964 will comply with the Sections 301, 302, 303, 306, and 307 of the Act, and with applicable provisions of State and Federal water pollution control laws.

Any person desiring to present views on the project pertaining to compliance with water pollution control laws may do so by providing written comments within 30 days of the above publication date to:

Federal Permit Coordinator
Department of Ecology
SEA Program
Post Office Box 47600
Olympia, Washington 98504-7600