US Army Corps
of Engineers
Seattle District

Public Notice of Application for Permit

Regulatory Branch
Post Office Box 3755
Seattle, Washington 98124-3755
Telephone (206) 764-3495
ATTN: Jim Green, Project Manager

Public Notice Date: September 15, 2004
Expiration Date: October 15, 2004
Reference: 200400979
Name: Kingston, Port of

Interested parties are hereby notified that an application has been received for a Department of the Army permit in accordance with Section 10 of the Rivers and Harbors Act of March 3, 1899, for certain work described below and shown on the enclosed drawings.

APPLICANT - Port of Kingston
Post Office Box 559
Kingston, Washington 98346
Telephone: (360) 297-3545

AGENT - GeoEngineers, Incorporated
Mr. Wayne Wright
1550 Woodridge Drive Southeast
Port Orchard, Washington 98366
Telephone: (360) 769-8400

LOCATION – In Appletree Cove, Puget Sound at Kingston, Kitsap County, Washington.

WORK – Construct a passenger ferry terminal. Work will include driving piling, constructing three gangways, and installing a barge for ferry access.

PURPOSE – To provide passenger only ferry service between Kingston and downtown Seattle, Washington.

MITIGATION – Conservation measures include reusing components of the existing ferry terminal for construction, doing work within approved work windows, use of vibratory pile drivers and bubble curtains when possible, use of shallow-berth barges for construction, and reducing effects of shade by avoiding eelgrass and constructing facility in a north-south orientation.

ENDANGERED SPECIES - The Endangered Species Act (ESA) of 1973, as amended, requires assessment of potential impacts to listed and proposed species. The bald eagle *(Haliaeetus leucocephalus)*, Puget Sound bull trout *(Salvelinus confluentus)*, and Puget Sound chinook salmon *(Oncorhynchus tshawytscha)* listed as threatened or endangered in the state of Washington, occur in the proposed project area. For Puget Sound bull trout, critical habitat has been proposed. The U.S. Army Corps of Engineers (Corps) will evaluate the potential impacts to these species and their habitat.

ESSENTIAL FISH HABITAT - The Magnuson-Stevens Fishery Conservation and Management Act (MSA), as amended by the Sustainable Fisheries Act of 1996, requires all Federal agencies to consult with the

National Marine Fisheries Service (NMFS) on all actions, or proposed actions, permitted, funded, or undertaken by the agency, that may adversely affect Essential Fish Habitat (EFH). EFH for Pacific salmon, groundfish, and coastal pelagic species occur in the project area. The proposed action would impact approximately 0.2 acres of EFH for these species.

If the Corps determines that the proposed action may adversely affect EFH for federally managed fisheries in Washington waters, the Corps will initiate EFH consultation with the NMFS. The Corps' final determination relative to project impacts and the need for mitigation measures is subject to review by and coordination with the NMFS.

CULTURAL RESOURCES – The DE has reviewed the latest published version of the National Register of Historic Places, lists of properties determined eligible and other sources of information. The following is current knowledge of the presence or absence of historic properties and the effects of the undertaking upon these properties:

There are no recorded historic properties within the permit area. The proposed work is of such a limited nature and extent that little likelihood exists for the project to impinge upon an unrecorded historic property.

The DE invites responses to this public notice from Native American Nations or tribal governments, Federal, State, and local agencies, historical and archeological societies, and other parties likely to have knowledge of or concerns with historic properties in the area.

PUBLIC HEARING - Any person may request, in writing, within the comment period specified in this notice, that a public hearing be held to consider this application. Requests for public hearings shall state, with particularity, the reasons for holding a public hearing.

EVALUATION - The decision whether to issue a permit will be based on an evaluation of the probable impact, including cumulative impacts of the proposed activity on the public interest. That decision will reflect the national concern for both protection and utilization of important resources. The benefits, which reasonably may be expected to accrue from the proposal, must be balanced against its reasonably foreseeable detriments. All factors which may be relevant to the proposal will be considered, including the cumulative effects thereof; among those are conservation, economics, aesthetics, general environmental concerns, wetlands, historic properties, fish and wildlife values, flood hazards, floodplain values, land use, navigation, shoreline erosion and accretion, recreation, water supply and conservation, water quality, energy needs, safety, food and fiber production, mineral needs, considerations of property ownership, and, in general, the needs and welfare of the people.

Corps is soliciting comments from the public; Federal, Native American Nations or tribal governments, State, and local agencies and officials; and other interested parties in order to consider and evaluate the impacts of this activity. Any comments received will be considered by the Corps to determine whether to issue, modify, condition or deny a permit for the work. To make this decision, comments are used to assess impacts on endangered species, historic properties, water quality, general environmental effects, and the other public interest factors listed above. Comments are used in the preparation of an Environmental Assessment and/or an Environmental Impact Statement pursuant to the National Environmental Policy Act. Comments are also used to determine the need for a public hearing and to determine the overall public interest of the activity.

ADDITIONAL EVALUATION - The State of Washington is reviewing this work for consistency with the approved Washington Coastal Zone Management Program.

This proposal is the subject of a Shorelines Substantial Development Permit application being processed by Kitsap County.

COMMENT AND REVIEW PERIOD – Conventional mail or e-mail comments on this public notice will be accepted and made part of the record and will be considered in determining whether it would be in the public interest to authorize this proposal. In order to be accepted, e-mail comments must originate from the author's e-mail account and must include on the subject line of the e-mail message the permit applicant's name and reference number as shown below. All e-mail comments should be sent to James.D.Green@nws02.usace.army.mil. Conventional mail comments should be sent to U.S. Army Corps of Engineers, Regulatory Branch, Post Office Box 3755, Seattle, Washington 98124-3755. Both conventional mail or e-mail comments must include the permit applicant's name and reference number, as shown below, and the commentor's name, address, and phone number. All comments whether conventional mail or e-mail must reach this office, no later than the expiration date of this public notice to ensure consideration. Please include the following name and reference number:

Port of Kingston, 200400979

Encl
Drawings (10)

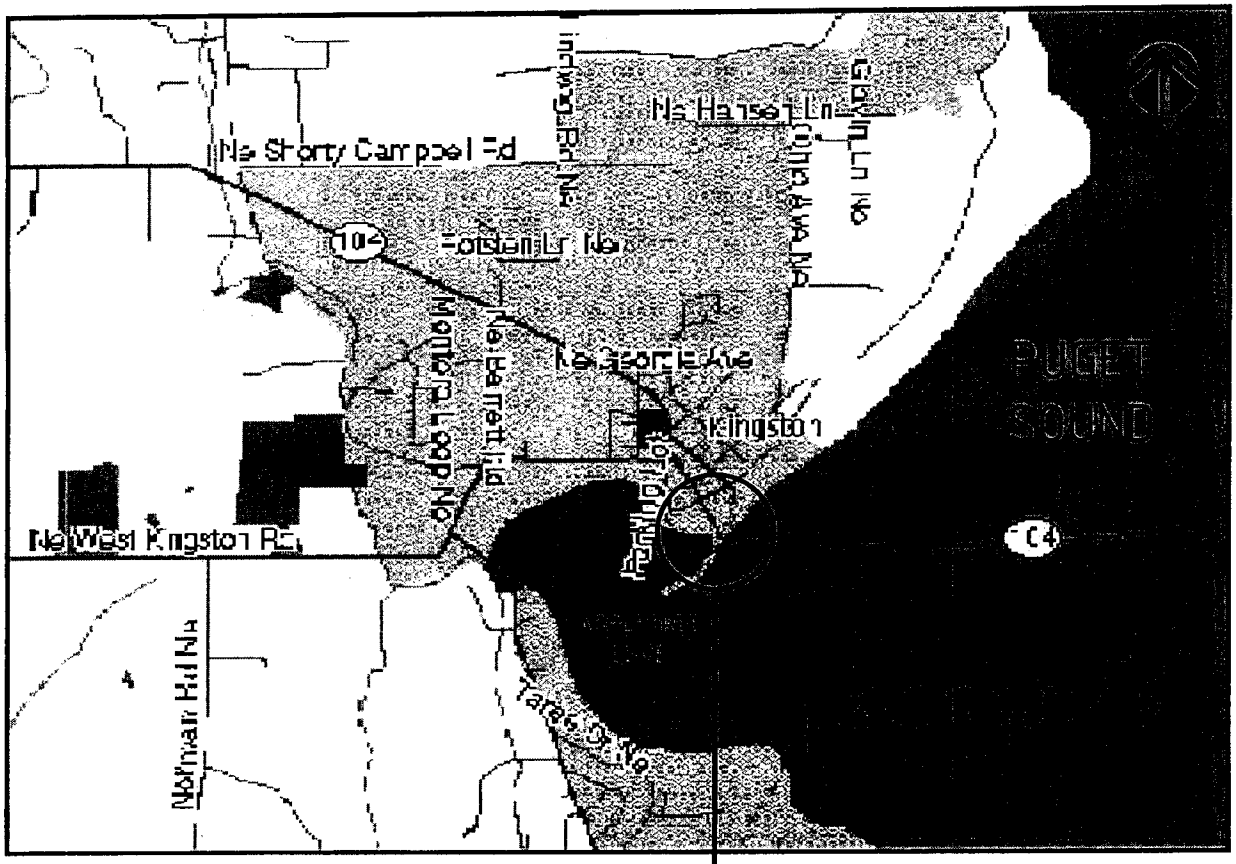

PROJECT SITE
LAT 47° 47' 48" N
LON 122° 29' 42" W

DIRECTIONS:

FROM WEST — DRIVE EAST ON U.S. 101 TO STATE ROUTE (SR) 104, CROSSING THE HOOD CANAL FLOATING BRIDGE. CONTINUE EAST ON SR 104 FOR 8 MORE MILES (THROUGH PORT GAMBLE) TO THE KINGSTON FERRY TERMINAL.

FROM SOUTH — DRIVE NORTH ON STATE ROUTE (SR) 3 AND TAKE SR 307 (BOND ROAD) FOR 6 MILES TO THE JUNCTION WITH SR 104. CONTINUE EAST ON SR 104 FOR 3 MILES TO THE KINGSTON FERRY TERMINAL.

FROM EAST — TAKE EDMONDS/KINGSTON FERRY. PROJECT SITE IS IMMEDIATELY ADJACENT TO FERRY TERMINAL TO THE SOUTH.

200400979

PURPOSE: NEW PASSENGER DOCK N.O.S. DATUM: MLLW = 0.00 FT ADJACENT PROPERTY OWNERS: PORT OF KINGSTON WASHINGTON STATE FERRIES	FIG. 1 VICINITY MAP SCALE = 1" = 2000' 0 1000' 2000' 3000' 4000' PORT OF KINGSTON 25864 WASHINGTON BLVD. KINGSTON, WA 98346	IN: PUGET SOUND COUNTYOF: KITSAP STATE OF: WASHINGTON APPLICATION BY: PORT OF KINGSTON Proposed Ferry Terminal SHEET: 1 of 10 DATE: 9AUG04 CREATED BY: ART ANDERSON ASSOCIATES

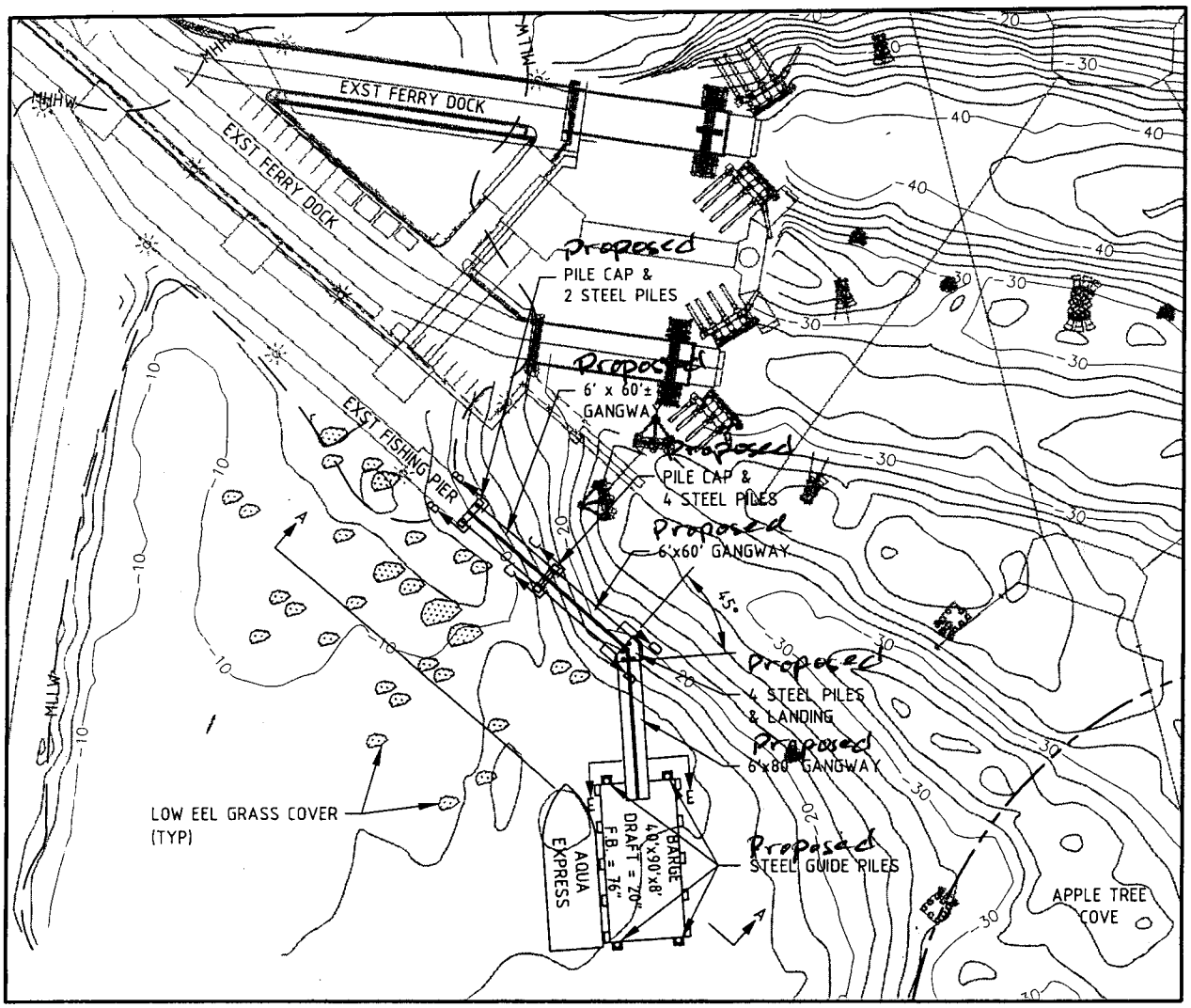

ELW = -2.38
MLLW = 0.00
MLW = +2.82
MHW = + 10.3
MHHW = 11.1

2004 00979

PURPOSE: NEW PASSENGER DOCK	FIG. 2 SITE PLAN SCALE = 1"=100'	IN: PUGET SOUND
		COUNTY OF: KITSAP
DATUM: MLLW = 0.00 FT	0 20' 40' 60' 80' 100' 150' 200'	STATE OF: WASHINGTON
		APPLICATION BY: PORT OF KINGSTON
ADJACENT PROPERTY OWNERS: PORT OF KINGSTON WASHINGTON STATE FERRIES	PORT OF KINGSTON 25864 WASHINGTON BLVD. KINGSTON, WA 98346	SHEET: 2 of 10 DATE: 9AUG04 CREATED BY: ART ANDERSON ASSOCIATES

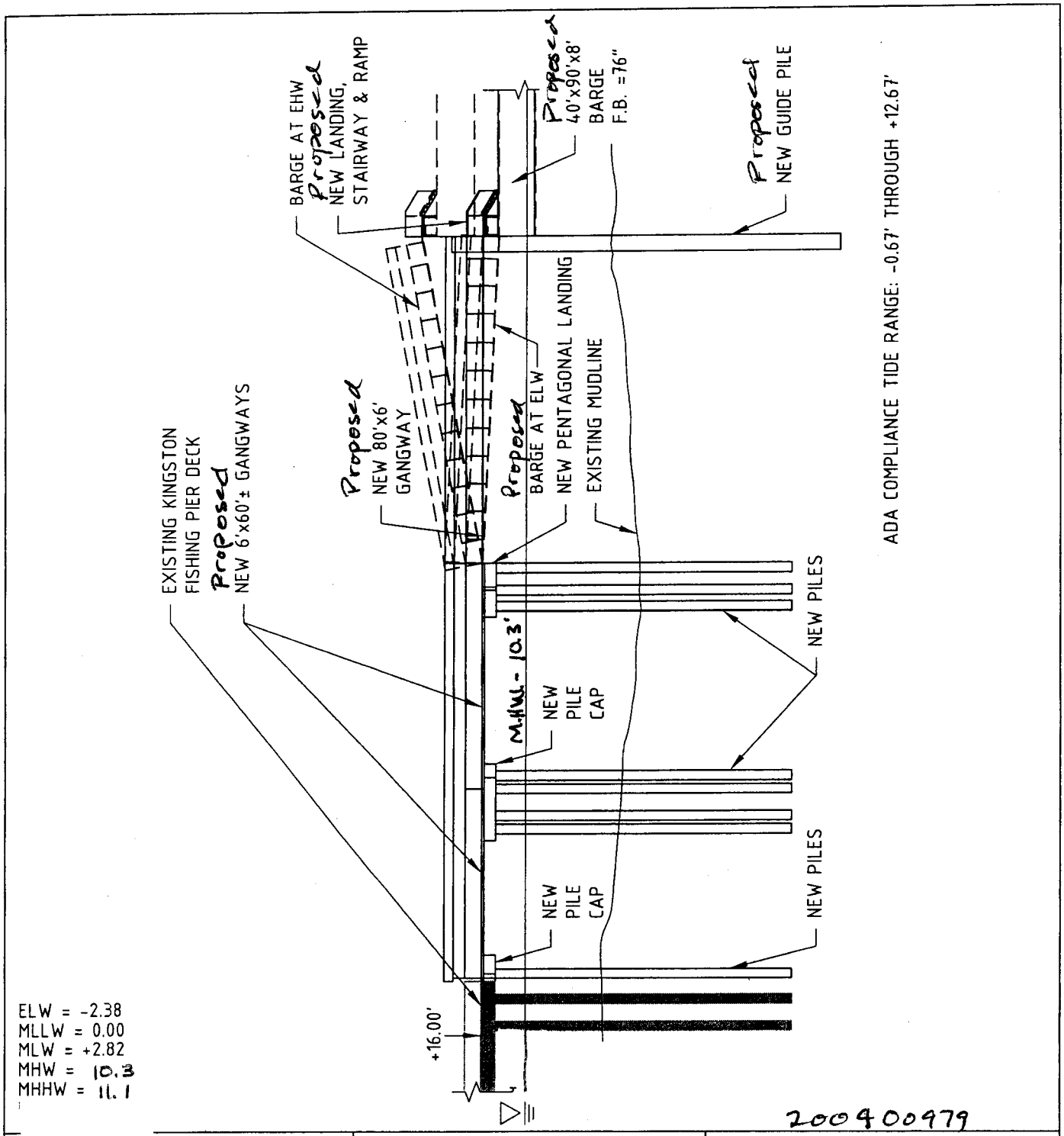

200400979

PURPOSE: NEW PASSENGER DOCK

DATUM: MLLW = 0.00 FT

ADJACENT PROPERTY OWNERS:

PORT OF KINGSTON
WASHINGTON STATE FERRIES

FIG. 3 SECTION A-A
SCALE = 1"=30'

0 10' 20' 30' 45' 60'

PORT OF KINGSTON
25864 WASHINGTON BLVD.
KINGSTON, WA 98346

IN: PUGET SOUND
COUNTYOF: KITSAP
STATE OF: WASHINGTON
APPLICATION BY: PORT OF KINGSTON

SHEET: 3 of 10 DATE: 9AUG04

CREATED BY: ART ANDERSON ASSOCIATES

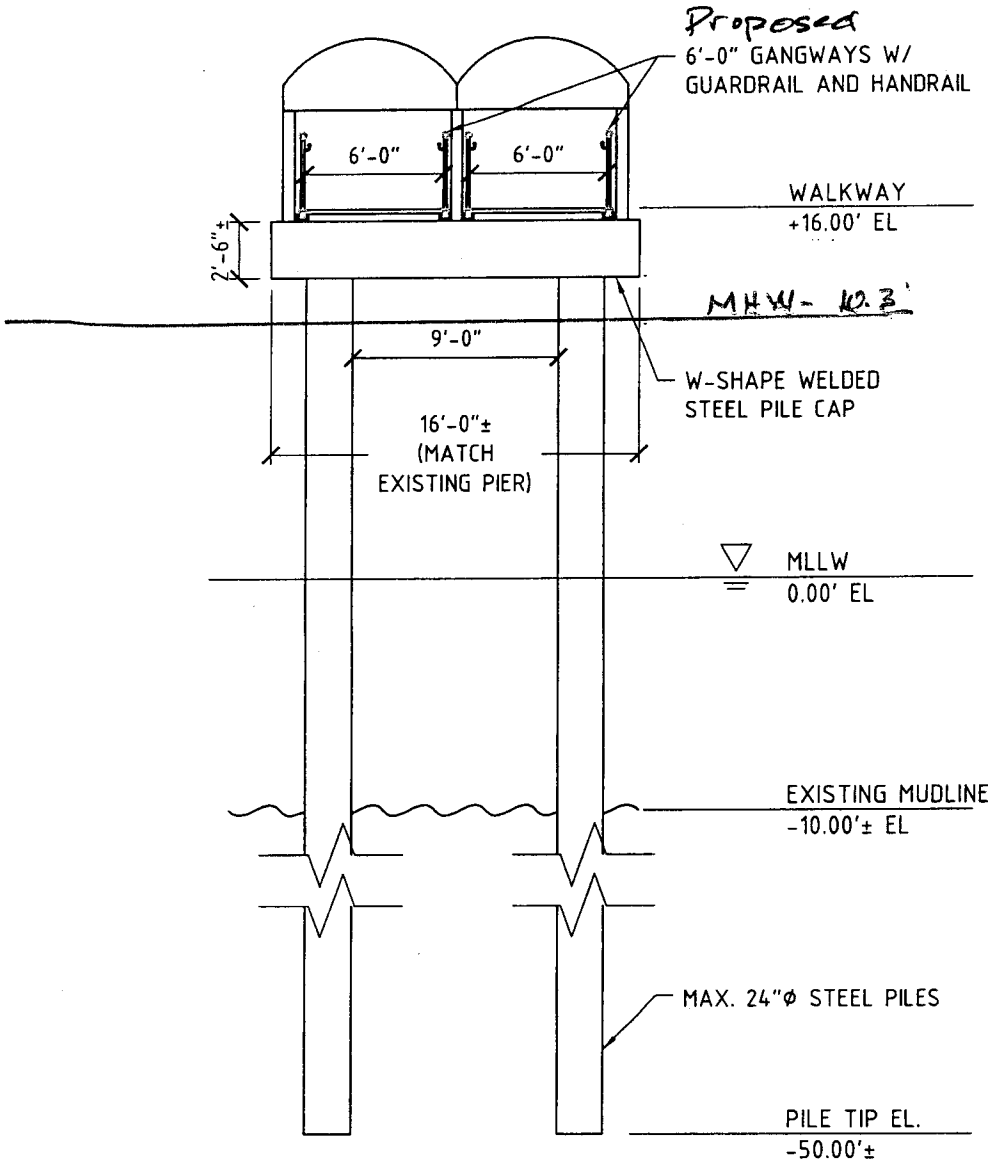

ELW = -2.38
MLLW = 0.00
MLW = +2.82
MHW = +10.3'
MHHW = 11.1

200400979

PURPOSE: NEW PASSENGER DOCK	FIG. 4 SECTION B-B SCALE = 1/8"=1'-0" 0 2' 4' 6' 8' 12' 16'	IN: PUGET SOUND COUNTYOF: KITSAP STATE OF: WASHINGTON APPLICATION BY: PORT OF KINGSTON
DATUM: MLLW = 0.00 FT		
ADJACENT PROPERTY OWNERS: PORT OF KINGSTON WASHINGTON STATE FERRIES	PORT OF KINGSTON 25864 WASHINGTON BLVD. KINGSTON, WA 98346	SHEET: 4 of 10 DATE: 9AUG04 CREATED BY: ART ANDERSON ASSOCIATES

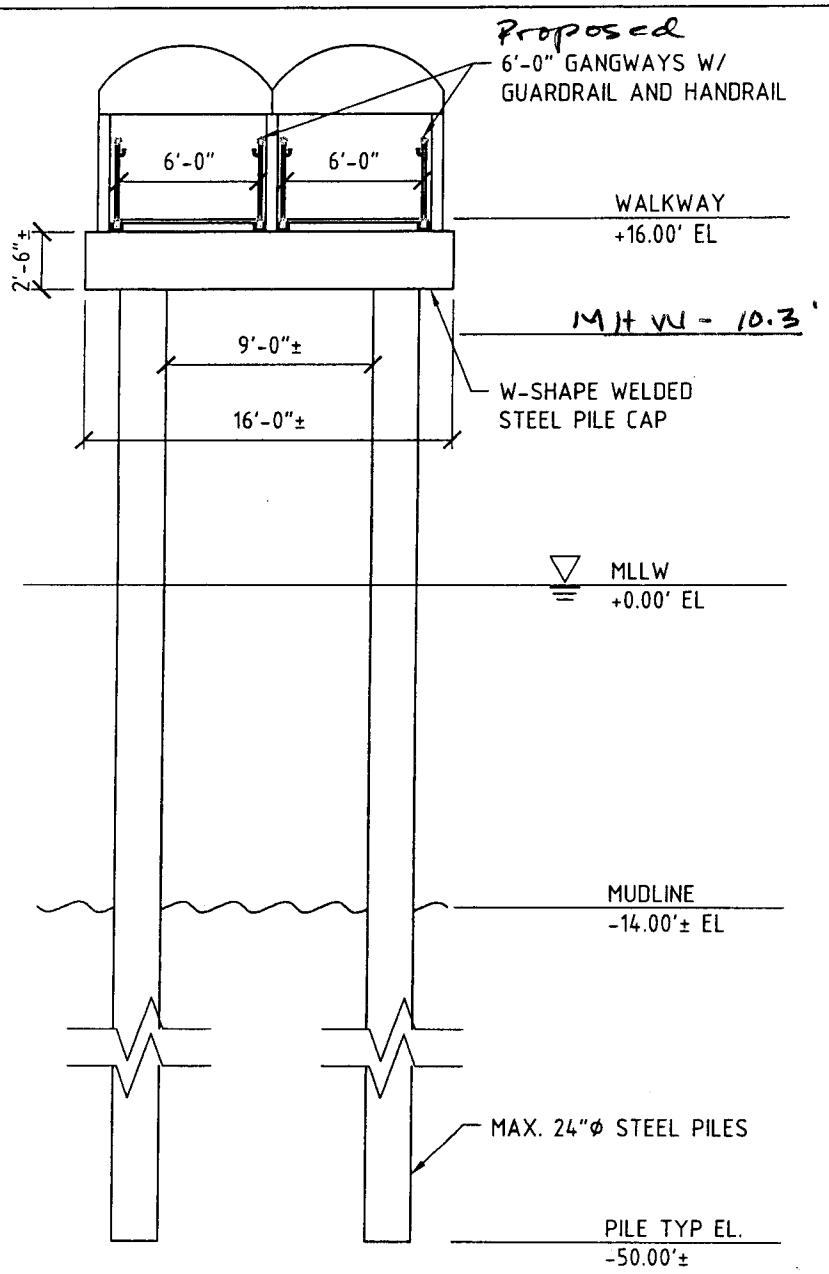

ELW = -2.38
MLLW = 0.00
MLW = +2.82
MHW = 10.3'
MHHW = 11.1'

200400979

PURPOSE: NEW PASSENGER DOCK DATUM: MLLW = 0.00 FT ADJACENT PROPERTY OWNERS: PORT OF KINGSTON WASHINGTON STATE FERRIES	FIG. 5 SECTION C-C SCALE = 1/8"=1'-0" 0 2' 4' 6' 8' 12' 16' PORT OF KINGSTON 25864 WASHINGTON BLVD. KINGSTON, WA 98346	IN: PUGET SOUND COUNTYOF: KITSAP STATE OF: WASHINGTON APPLICATION BY: PORT OF KINGSTON SHEET: 5 of 10 DATE: 9AUG04 CREATED BY: ART ANDERSON ASSOCIATES

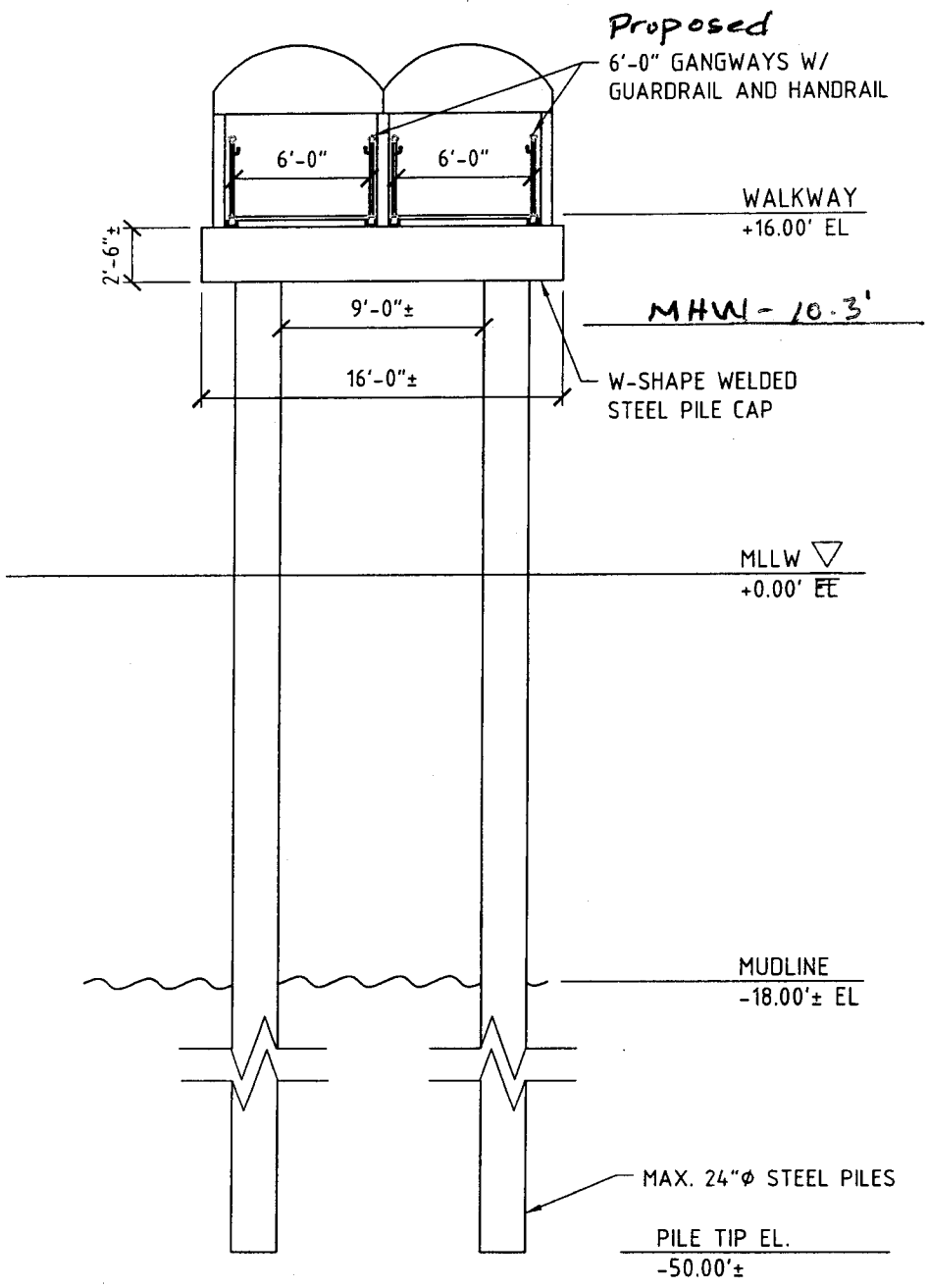

ELW = -2.38
MLLW = 0.00
MLW = +2.82
MHW = 10.3'
MHHW = 11.1'

200400979

PURPOSE: REF. PASSENGER DOCK	FIG. 6 SECTION D-D SCALE = 1/8"=1'-0" 0 2' 4' 6' 8' 12' 16'	IN: PUGET SOUND COUNTYOF: KITSAP STATE OF: WASHINGTON APPLICATION BY: PORT OF KINGSTON
DATUM: MLLW = 0.00 FT		
ADJACENT PROPERTY OWNERS: PORT OF KINGSTON WASHINGTON STATE FERRIES	PORT OF KINGSTON 25864 WASHINGTON BLVD. KINGSTON, WA 98346	SHEET: 6 of 10 DATE: 9AUG04 CREATED BY: ART ANDERSON ASSOCIATES

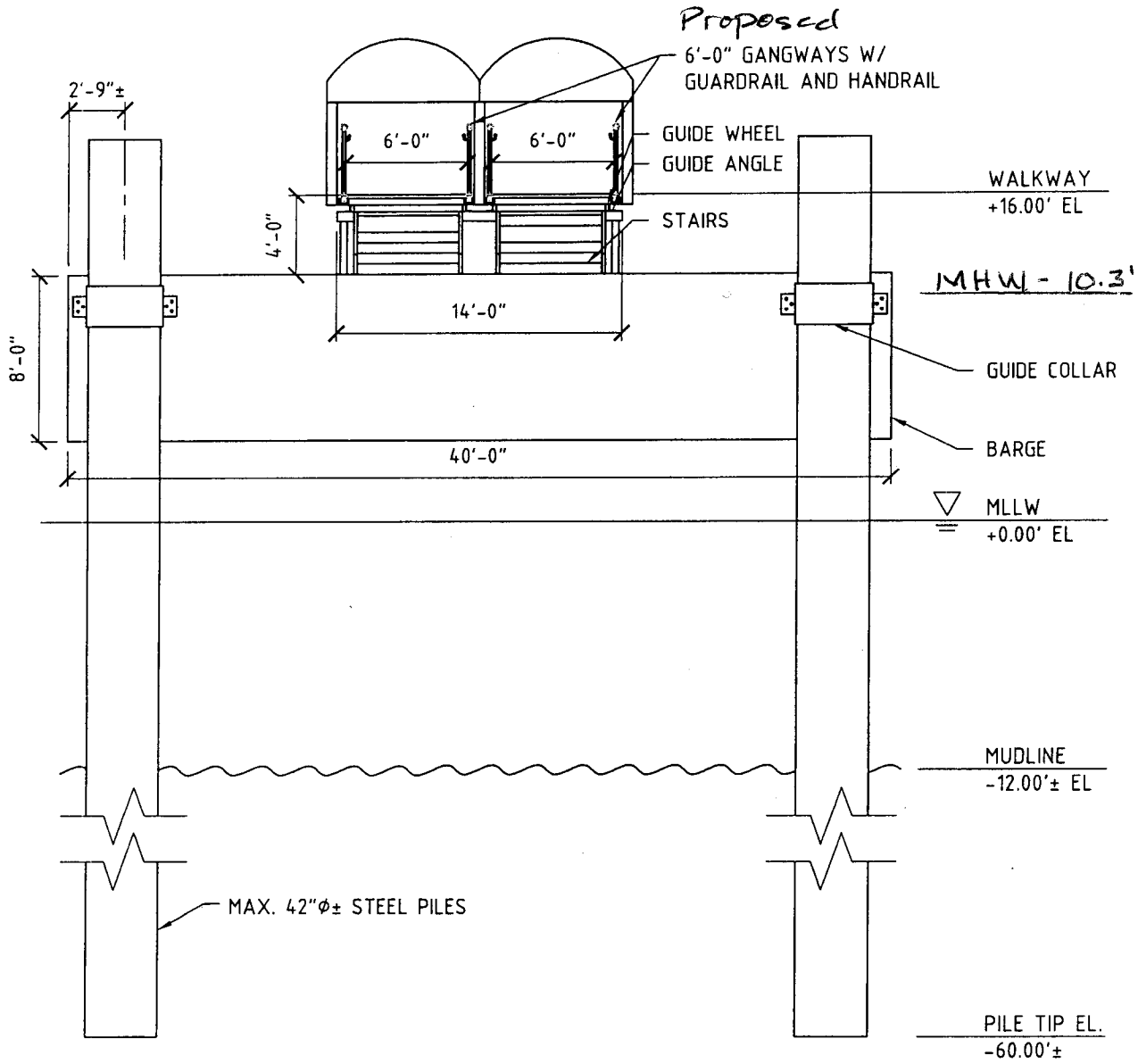

ELW = -2.38
MLLW = 0.00
MLW = +2.82
MHW = +10.3'
MHHW = +11.1'

200400979

PURPOSE: NEW PASSENGER DOCK DATUM: MLLW = 0.00 FT ADJACENT PROPERTY OWNERS: PORT OF KINGSTON WASHINGTON STATE FERRIES	FIG. 7 SECTION E-E SCALE = 1/8"=1'-0" 0 2' 4' 6' 8' 12' 16' PORT OF KINGSTON 25864 WASHINGTON BLVD. KINGSTON, WA 98346	IN: PUGET SOUND COUNTY OF: KITSAP STATE OF: WASHINGTON APPLICATION BY: PORT OF KINGSTON SHEET: 7 of 10 DATE: 9AUG04 CREATED BY: ART ANDERSON ASSOCIATES

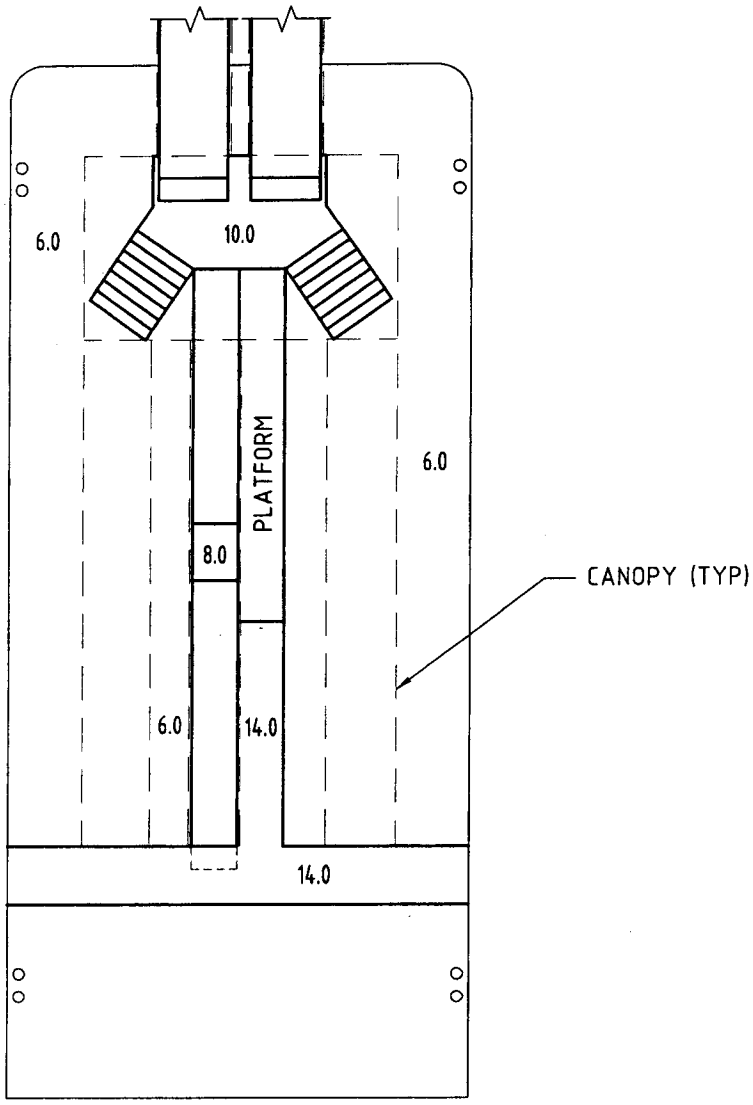

ELW = -2.38
MLLW = 0.00
MLW = +2.82
MHW = +10.3'
MHHW = 11.1

200400979

PURPOSE: NEW PASSENGER DOCK	FIG. 8 BARGE DECK PLAN SCALE = 1/16"=1'-0"	IN: PUGET SOUND
	0 4' 8' 12' 16' 24' 32'	COUNTYOF: KITSAP
DATUM: MLLW = 0.00 FT		STATE OF: WASHINGTON
		APPLICATION BY: PORT OF KINGSTON
ADJACENT PROPERTY OWNERS: PORT OF KINGSTON WASHINGTON STATE FERRIES	PORT OF KINGSTON 25864 WASHINGTON BLVD. KINGSTON, WA 98346	SHEET: 8 of 10 DATE: 9AUG04 CREATED BY: ART ANDERSON ASSOCIATES

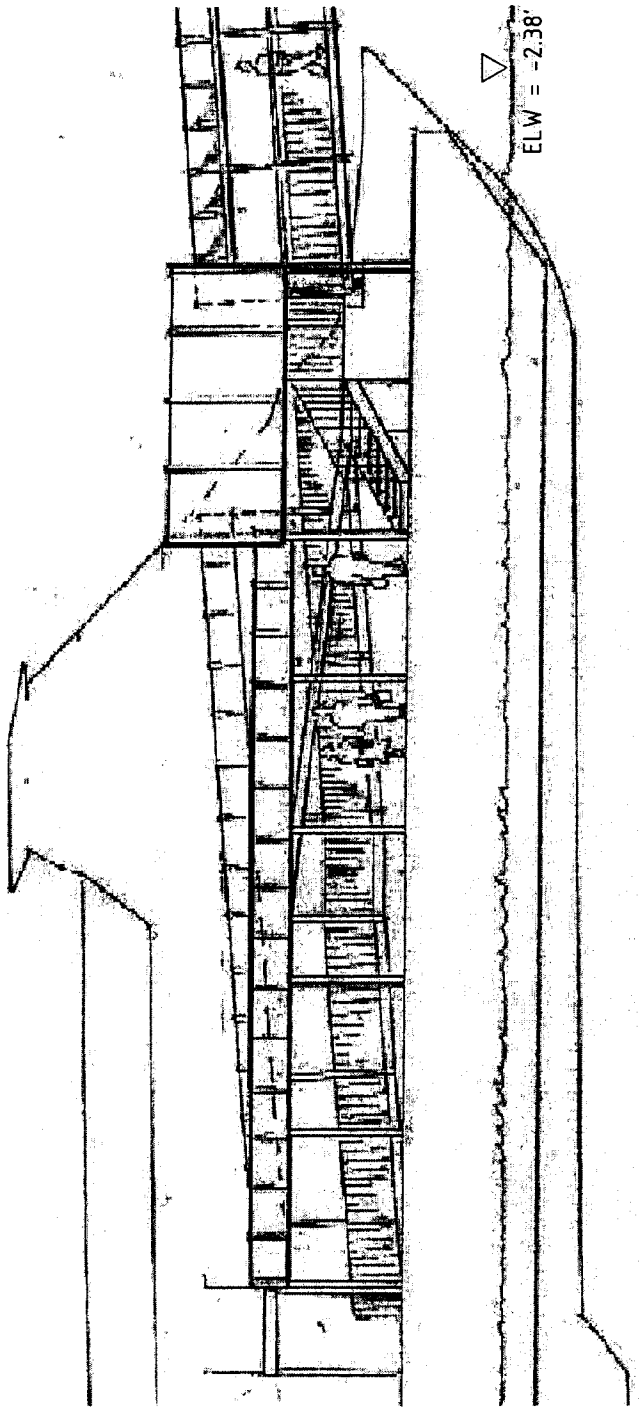

200400979

PURPOSE: NEW PASSENGER DOCK

DATUM: MLLW = 0.00 FT

ADJACENT PROPERTY OWNERS:

PORT OF KINGSTON
WASHINGTON STATE FERRIES

FIG. 9 BARGE PROFILE
SCALE = 1/8"=1'-0"

0 2' 4' 6' 8' 12' 16'

PORT OF KINGSTON
25864 WASHINGTON BLVD.
KINGSTON, WA 98346

IN: PUGET SOUND
COUNTYOF: KITSAP
STATE OF: WASHINGTON
APPLICATION BY: PORT OF KINGSTON

SHEET: 9 of 10 DATE: 9AUG04

CREATED BY: ART ANDERSON ASSOCIATES

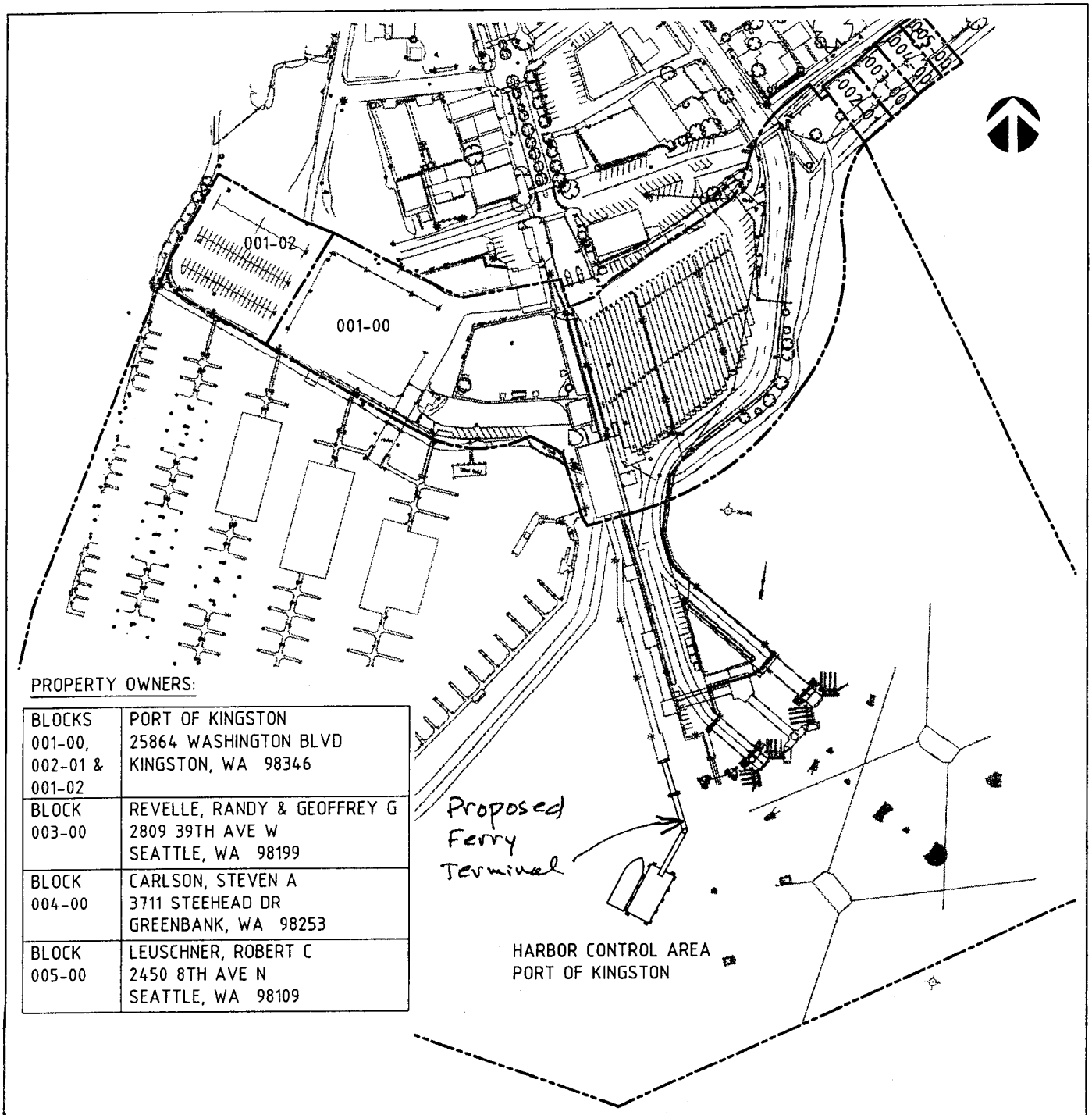

PROPERTY OWNERS:

BLOCKS 001-00, 002-01 & 001-02	PORT OF KINGSTON 25864 WASHINGTON BLVD KINGSTON, WA 98346
BLOCK 003-00	REVELLE, RANDY & GEOFFREY G 2809 39TH AVE W SEATTLE, WA 98199
BLOCK 004-00	CARLSON, STEVEN A 3711 STEEHEAD DR GREENBANK, WA 98253
BLOCK 005-00	LEUSCHNER, ROBERT C 2450 8TH AVE N SEATTLE, WA 98109

200400979

PURPOSE: NEW PASSENGER DOCK

DATUM: MLLW = 0.00 FT

ADJACENT PROPERTY OWNERS:

PORT OF KINGSTON
WASHINGTON STATE FERRIES

FIG. 10 PROPERTY OWNERS SCHEDULE
SCALE = 1"=20'

0 5' 10' 15' 20' 30' 40'

PORT OF KINGSTON
25864 WASHINGTON BLVD.
KINGSTON, WA 98346

IN: PUGET SOUND
COUNTYOF: KITSAP
STATE OF: WASHINGTON
APPLICATION BY: PORT OF KINGSTON

SHEET: 10 of 10 DATE: 3AUG04

CREATED BY: ART ANDERSON ASSOCIATES

STATE OF WASHINGTON
DEPARTMENT OF ECOLOGY
P.O. Box 47600 • Olympia, Washington 98504-7600
(360) 407-6000 • TDD Only (Hearing Impaired) (360) 407-6006

STATE OF WASHINGTON
DEPARTMENT OF ECOLOGY

Notice of Application for
Certification of Consistency with the
Washington Coastal Zone Management Program

Date: 09/15/04

Notice is herby given that a request has been filed with the Department of Ecology, pursuant to the requirements of Section 307© of the federal Coastal Zone Management Act of 1972 (16 U.S.C. 1451), to certify that the project described in the U.S. Army Corps of Engineers Public Notice No. 200400979 will comply with the Washington State Coastal Zone Management Program and that the project will be conducted in a manner consistent with that Program.

Any person desiring to present views on the project pertaining to the project's compliance or consistency with the Washington State Coastal Zone Management Program may do so by providing written comments within 30 days of the above publication date to:

Federal Permit Coordinator
Department of Ecology
SEA Program
Post Office Box 47600
Olympia, Washington 98504-7600