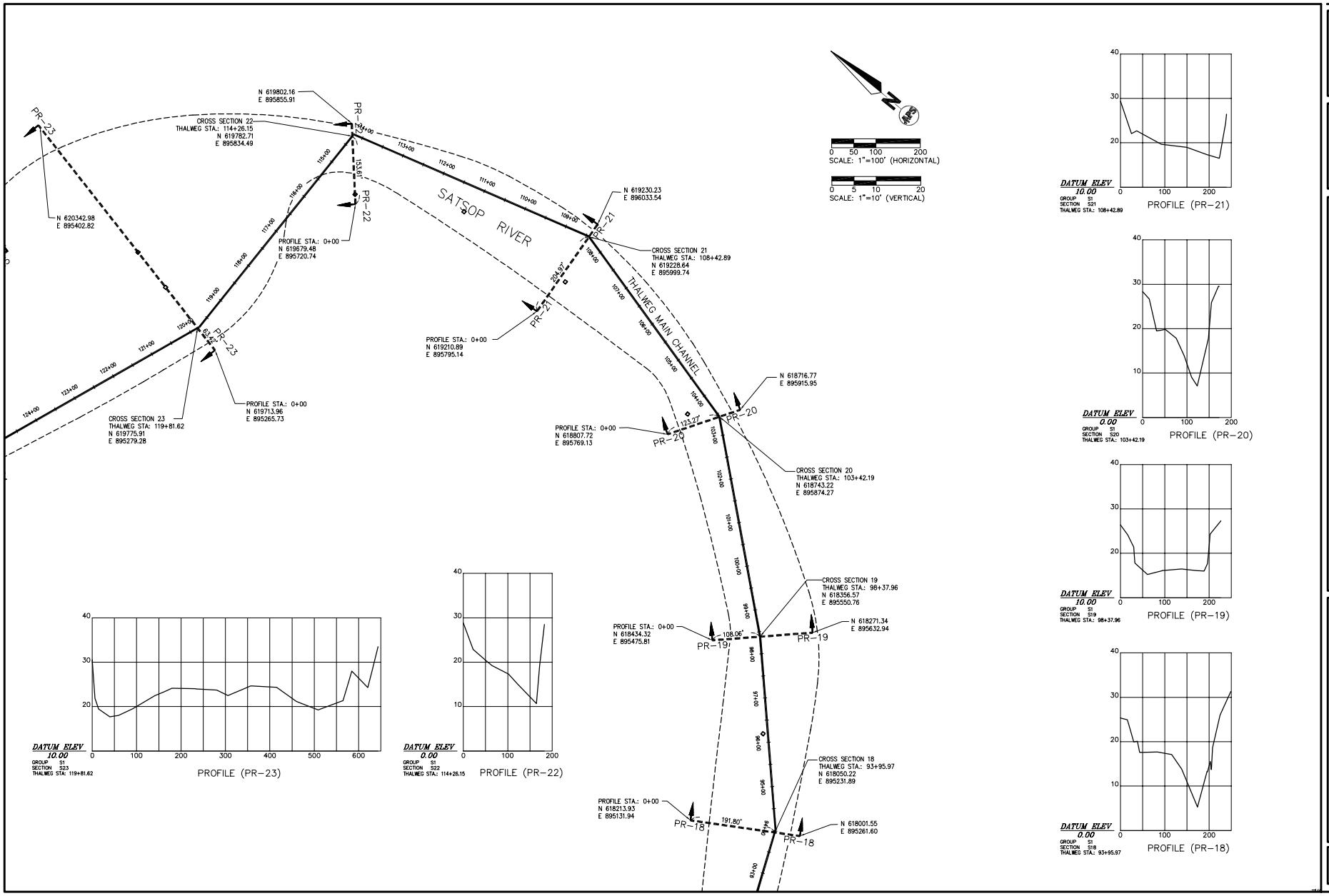

APS
SURVEY & MAPPING
640 N.W. GILMAN BOULEVARD, SUITE 115
ISSAQUAH, WASHINGTON 98027
PH. (425) 427-2554
FAX. (425) 427-2556

STATE OF WASHINGTON
TIMOTHY J. SHEET
29223
REGISTERED PROFESSIONAL LAND SURVEYOR
EXPIRES 02/28/03

SATSOP HYDROGRAPHIC SURVEY

SATSOP RIVER – PLAN / PROFILE SHEET

U.S. ARMY CORPS OF ENGINEERS

DATE: | APSSM PROJECT NO.: 10750SS | AutoCAD DWG NAME:

SURVEYED BY: TJS
DRAWN BY: MAGG
CHECKED BY: ——
APPROVED BY: ——

DATE	BY	REVISION	CK'D	APPR.

SHEET 4 OF 5