US Army Corps
of Engineers
Seattle District

# Public Notice of Application for Permit

**Regulatory Branch**
**Post Office Box 3755**
**Seattle, Washington 98124-3755**
**Telephone (206) 764-3495**
**ATTN:** Olivia Romano, Project Manager

Public Notice Date: December 13, 2004
Expiration Date: January 13, 2005
Reference: 200001094
Name: Northwest Aggregates

---

Interested parties are hereby notified that an application has been received for a Department of the Army permit in accordance with Section 10 of the Rivers and Harbors Act of March 3, 1899, for certain work described below and shown on the enclosed drawings.

APPLICANT - Northwest Aggregates
Mr. Pete Stoltz
Post Office Box 1730
Seattle, Washington 98111
Telephone: (206) 768-7636

LOCATION – In East Passage, Puget Sound at Maury Island, King County, Washington.

WORK – To replace and extend an existing dock. The removal work consists of:

a. The removal of the existing conveyor trestle, walkways, pier structures, eight dolphins, and four submerged piles.

b. The removal of a total of 228 timber piles.

The proposed construction work consists of:

a. Construction of a barge-loading conveyor tube with three, 4 to 6-pile support bents.

b. Seven 6-pile berthing dolphins with fenders and aluminum catwalks.

c. Installation of a maximum of 56 new steel piles.

The new dock will extend up to of 305 feet (ft) waterward of the mean high water line and will run 510 ft parallel to the shoreline. The new dock structure will cover a surface area of 7,796 square feet.

PURPOSE – To load barges with gravel from the existing upland gravel mine on Maury Island.

ADDITIONAL INFORMATION – The proposed project has been modified through the Endangered Species Act (ESA) consultation process and the local shoreline permit processes to reduce the potential impacts to the marine environment. The proposed project extends 120 ft waterward from the outer edge of the existing eelgrass beds to the face of the proposed dock. The conveyor tube is completely enclosed to prevent gravel

spillage from the mining area to the loader. A minimum of 3 ft will be maintained between the loaded barges and the substrate at Mean Lower Low Water line. The existing dock structure covers a surface area of 8,940 square feet. The existing sunken barges indicated on Sheet 6 of 19 will remain in place.

MITIGATION - The applicant has proposed a mitigation plan to mitigate for potential impacts from barge-loading operations. The mitigation plan address impacts from gravel spillage, shading, prop wash, and noise associated with operation of the barge-loading dock. A summary of mitigation measures include: dock extending 120 ft from the outer edge of the existing eelgrass beds; only one barge will be allowed at the dock at any one time; empty barges will remain 2,500 ft waterward of the dock while waiting to load; gravel barges and tugboats will not operate shoreward of the dolphins; tugboats will not operate on the shoreward side of barges at the dock; tugboat/barge configurations will approach and depart the dock at the slow speed as weather conditions will allow; haul-back system will be used to move the barge during loading; tugboats will "back" the barge away from the dock as weather conditions will allow; tugboats will not operate within 120 ft of the eelgrass beds; tugboat operators will avoid directing prop wash towards the shore and will avoid use of excessive thrust; a minimum distance of 3 ft will be maintained between the bottom of barges and the seabed; gravel conveyor will be completely enclosed; the conveyor will place the gravel in the center of barge; a manual limit switch will be installed on the conveyor to prevent the conveyor from operating when a barge is not in place to accept material; only barges with bin wall will be loaded and material will be at least 2 ft below the top of bin walls; a trained dock worker will remain stationed on the dock to observe barge-loading operations; tugboat cress will be trained to watch for situations in which the barge and conveyor are misaligned; barge-loading operations will be monitored by video cameras and periodic monitoring and reporting will be conducted to verify that barge-loading procedures are being followed and to confirm that the mitigation measures are successful. The mitigation plan is available for review upon request.

ENDANGERED SPECIES - The ESA of 1973, as amended, requires assessment of potential impacts to listed and proposed species. The bald eagle, (*Haliaeetus leucocephalus*), listed threatened; marbled murrelet (*Brachyramphus marmoratus),* listed threatened; coastal/Puget Sound bull trout, (*Salvelinus confluentus),* listed threatened; Puget Sound chinook, (*Oncorhynchus tshawytscha*), listed threatened; Steller sea lion, (*Eumetopias jubatus),* listed threatened; humpback whale, (*Eumetopias jubatus),* listed threatened; and leatherback sea turtle, *(Dermochelys coriacea),* listed endangered in the state of Washington (State), may occur in the proposed project area. The Corps made a determination of "likely to adversely affect" for bull trout, bald eagle, marbled murrelet, and chinook. A determination of "no effect" was made for Steller sea lion, humpback whale and leatherback sea turtle. Formal consultation under Section 7 of the ESA was initiated with National Marine Fisheries Service (NMFS) and U.S. Fish and Wildlife Service (USFWS) on May 9, 2003. As a result of the project modifications proposed by the applicant during consultation, the Corps requested the NMFS and USFWS to concur with a "may affect, not likely to adversely affect" determination for bull trout, bald eagle, marbled murrelet, and chinook. By letter dated February 10, 2004, NMFS concurred with the Corps determination of "may affect, but not likely to adversely affect" for chinook. USFWS, by letter dated April 8, 2004, concurred with Corps determination of "may affect, but not likely to adversely affect" for bull trout, bald eagle and marbled murrelet. Section 7 consultation has been completed.

ESSENTIAL FISH HABITAT - The Magnuson-Stevens Fishery Conservation and Management Act (MSA), as amended by the Sustainable Fisheries Act of 1996, requires all Federal agencies to consult with the NMFS on all actions, or proposed actions, permitted, funded, or undertaken by the agency, that may adversely affect Essential Fish Habitat (EFH). EFH for Pacific salmon, groundfish, coastal pelagic species occurs in the project area. The proposed action would impact approximately 3.0 acres of EFH for these species. The Corps determined that the proposed action would adversely affect designated EFH for federally managed fisheries in Washington waters. The Corps initiated EFH consultation with the NMFS on

May 9, 2003. By letter dated, February 10, 2004, NMFS indicated that the conservation measures included as part of the proposed action to address ESA concerns are adequate to avoid, minimize, or otherwise offset potential adverse impacts to EFH, conservation recommendations pursuant to MSA are not necessary. EFH consultation with NMFS has been completed.

CULTURAL RESOURCES - The District Engineer (DE) has reviewed the latest published version of the National Register of Historic Places, lists of properties determined eligible and other sources of information. The following is current knowledge of the presence or absence of historic properties and the effects of the undertaking upon these properties: There are no recorded historic properties within the permit area. The permit area has been so extensively modified by modern development that little likelihood exists for the proposed project to impinge upon an undisturbed historic property.

The DE invites responses to this public notice from Native American Nations or tribal governments, Federal, State, and local agencies, historical and archeological societies, and other parties likely to have knowledge of or concerns with historic properties in the area.

PUBLIC HEARING - Any person may request, in writing, within the comment period specified in this notice, that a public hearing be held to consider this application. Requests for public hearings shall state, with particularity, the reasons for holding a public hearing.

EVALUATION - The decision whether to issue a permit will be based on an evaluation of the probable impact, including cumulative impacts of the proposed activity on the public interest. That decision will reflect the national concern for both protection and utilization of important resources. The benefits, which reasonably may be expected to accrue from the proposal, must be balanced against its reasonably foreseeable detriments. All factors which may be relevant to the proposal will be considered, including the cumulative effects thereof; among those are conservation, economics, aesthetics, general environmental concerns, wetlands, historic properties, fish and wildlife values, flood hazards, floodplain values, land use, navigation, shoreline erosion and accretion, recreation, water supply and conservation, water quality, energy needs, safety, food and fiber production, mineral needs, considerations of property ownership, and, in general, the needs and welfare of the people.

The Corps is soliciting comments from the public; Federal, Native American Nations or tribal governments, State, and local agencies and officials; and other interested parties in order to consider and evaluate the impacts of this activity. Any comments received will be considered by the Corps to determine whether to issue, modify, condition or deny a permit for the work. To make this decision, comments are used to assess impacts on endangered species, historic properties, water quality, general environmental effects, and the other public interest factors listed above. Comments are used in the preparation of an Environmental Assessment and/or an Environmental Impact Statement pursuant to the National Environmental Policy Act. Comments are also used to determine the need for a public hearing and to determine the overall public interest of the activity.

ADDITIONAL EVALUATION - The State is reviewing this work for consistency with the approved Washington Coastal Zone Management Program.

This proposal is the subject of Shorelines Substantial Development Permit No. 04-009, and 461-08-560, which is in the process of being issued as directed by the Shoreline Hearing Board on November 3, 2004.

COMMENT AND REVIEW PERIOD – Conventional mail or email comments on this public notice will be accepted and made part of the record and will be considered in determining whether it would be in the public interest to authorize this proposal. In order to be accepted, email comments must originate from the author's email account and must include on the subject line of the email message the permit applicant's name and

reference number as shown below. All email comments should be sent to Olivia.H.Romano@usace.army.mil. Conventional mail comments should be sent to U.S. Army Corps of Engineers, Regulatory Branch, Post Office Box 3755, Seattle, Washington 98124-3755. Both conventional mail or email comments must include the permit applicant's name and reference number, as shown below, and the commentor's name, address, and phone number. All comments whether conventional mail or email must reach this office, no later than the expiration date of this public notice to ensure consideration. Please include the following name and reference number:

Northwest Aggregates, 200001094

Encl
Drawings (19)

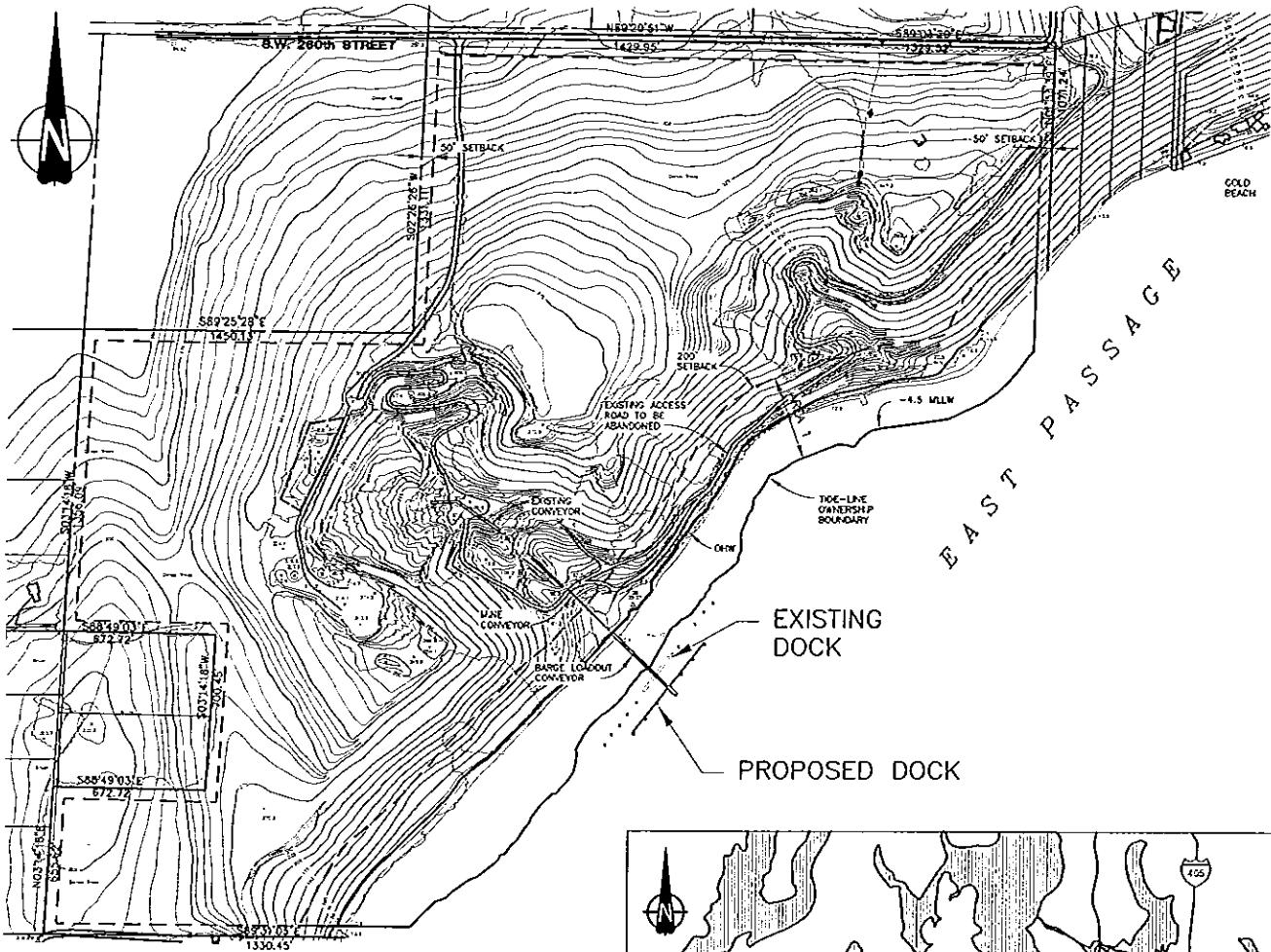


SITE MAP

1"=800'

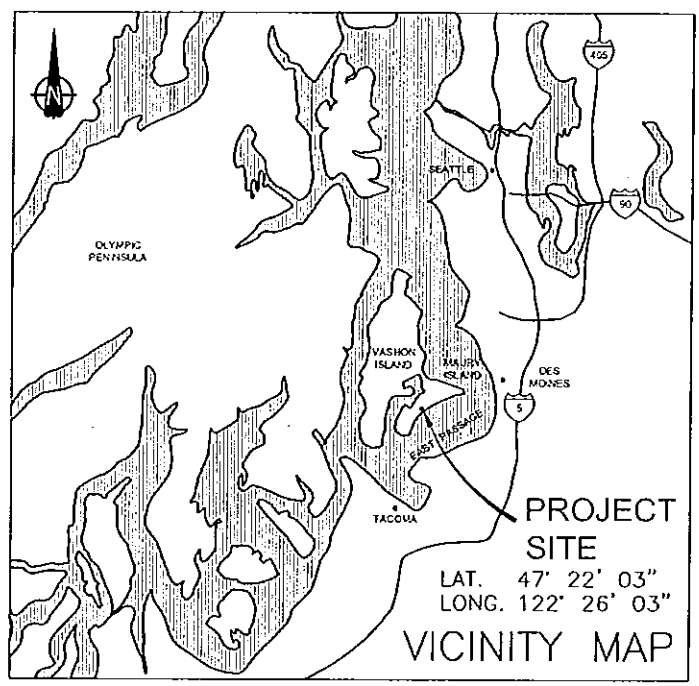


VICINITY MAP

PURPOSE:
PROVIDE MOORAGE FOR VESSELS TO RECEIVE SAND AND GRAVEL BEING TRANSFERRED OFF-SHORE

DATUM: MLLW

# MAURY ISLAND PIER MODIFICATIONS

SCALE: As Noted Above

NAME: NORTHWEST AGGREGATES

ADDRESS: 5975 E. MARGINAL WAY S.
P.O. BOX 1730
SEATTLE, WA 98111

PROPOSED: REPLACEMENT BARGE LOADING STRUCTURE

IN: EAST PASSAGE
AT: MAURY ISLAND
COUNTY OF: KING
APPLICATION BY: NORTHWEST AGGREGATES

SHEET 1 OF 19 DATE: NOVEMBER 2003

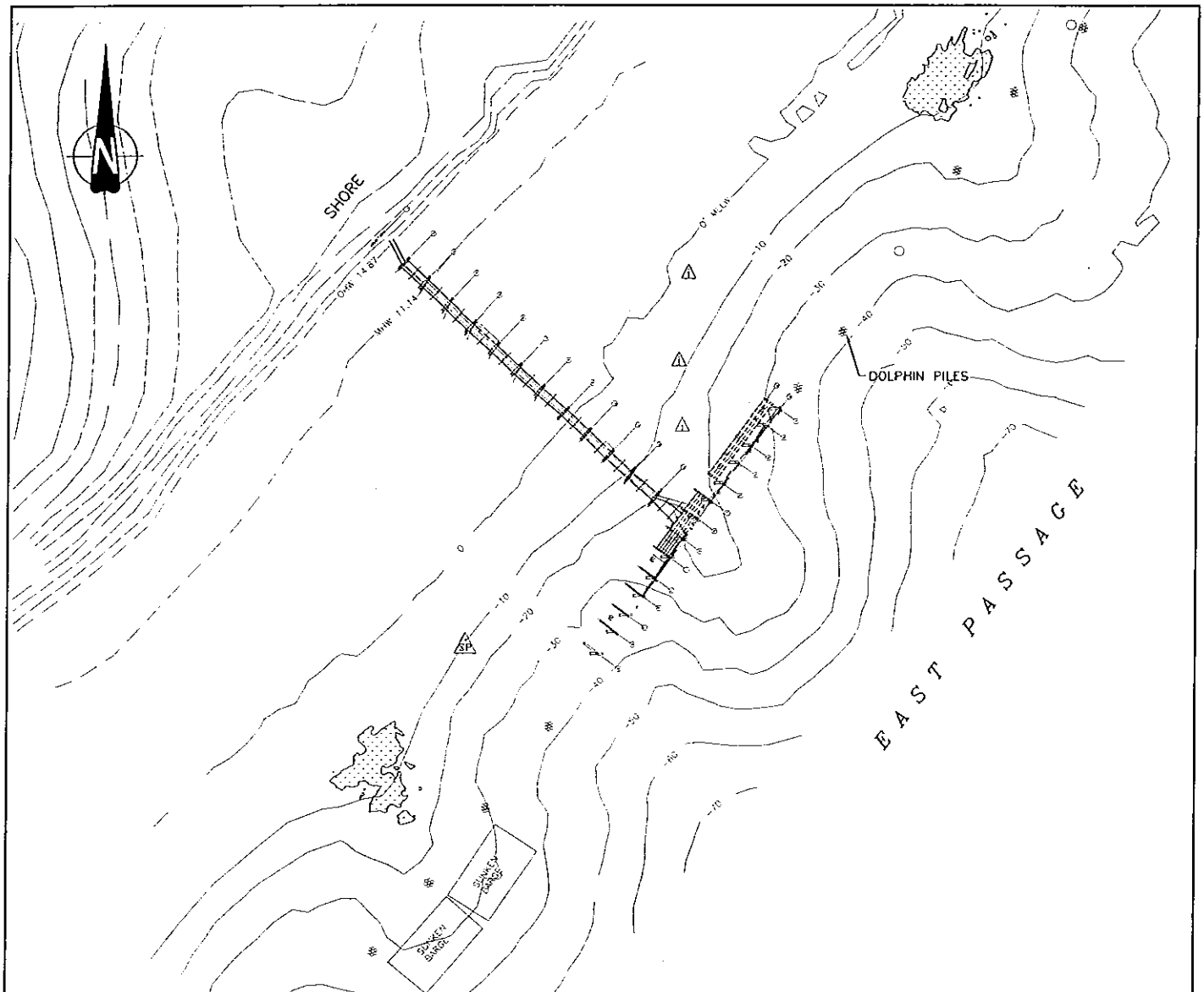


LEGEND:

- EELGRASS
- SP — SMALL PATCH OF EELGRASS
- SINGLE SHOOT OF EELGRASS
- EXISTING ABOVE WATER TIMBER PILE DOLPHINS
- EXISTING SUBMERGED DOLPHINS

NOTE:

EELGRASS LOCATIONS TAKEN FROM PACIFIC INTERNATIONAL ENGINEERING SURVEY, JUL/AUG 2001.

BATHYMETRY (BLUE WATER ENGINEERING,1999)

ACCORDING TO NOAA PUBLISHED INFORMATION N.G.V.D. 1929 IS 6.40 FEET HIGHER THAN MEAN LOWER LOW WATER (MLLW=0.0')

| | |
|---|---|
| ORDINARY HIGH WATER – LINE OF VEGETATION (OHW) | = 14.87 FT |
| HIGHEST OBSERVED WATER LEVEL (02/01/1975) | = 13.97 FT |
| MEAN HIGHER HIGH WATER (MHHW) | = 12.05 FT |
| MEAN HIGH WATER (MHW) | = 11.14 FT |
| MEAN TIDE LEVEL (MTL) | = 7.01 FT |
| *NATIONAL GEODETIC VERTICAL DATUM–1929 (NGVD) | = 6.40 FT |
| MEAN LOW WATER (MLW) | = 2.88 FT |
| MEAN LOWER LOW WATER (MLLW) | = 0.00 FT |
| LOWEST OBSERVED WATER LEVEL (12/24/1975) | = –2.01 FT |

## EXISTING DOCK/DOLPHIN PLAN AND TOPOGRAPHY

PURPOSE:
PROVIDE MOORAGE FOR VESSELS TO RECEIVE SAND AND GRAVEL BEING TRANSFERRED OFF–SHORE

DATUM: MLLW

# MAURY ISLAND PIER MODIFICATIONS

SCALE: 1"=100'

NAME: NORTHWEST AGGREGATES
ADDRESS: 5975 E. MARGINAL WAY S.
P.O. BOX 1730
SEATTLE, WA 98111

PROPOSED: REPLACEMENT BARGE LOADING STRUCTURE

IN: EAST PASSAGE
AT: MAURY ISLAND
COUNTY OF: KING
APPLICATION BY: NORTHWEST AGGREGATES

SHEET 2 OF 19 DATE: NOVEMBER 2003

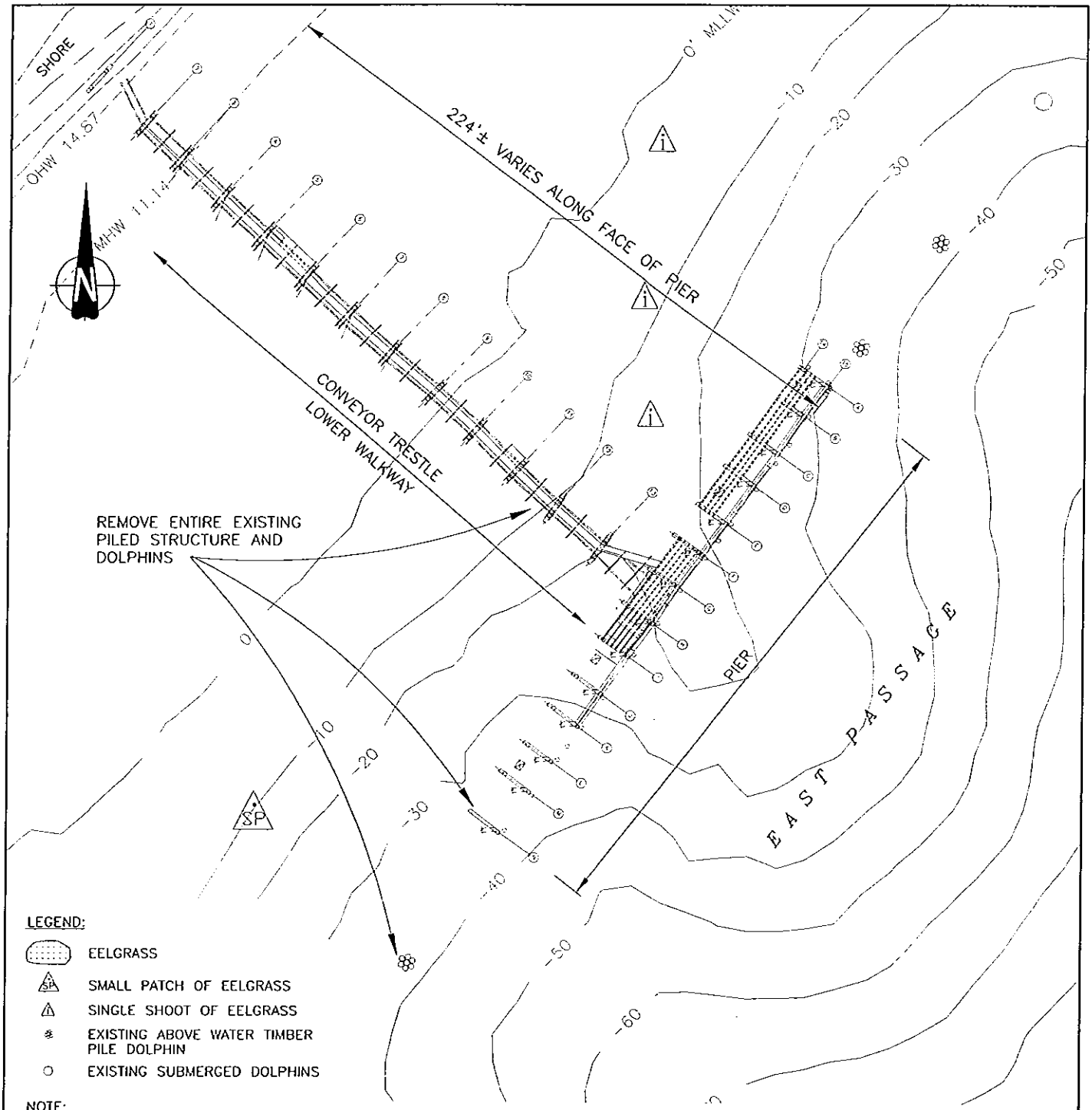


LEGEND:

- EELGRASS
- SMALL PATCH OF EELGRASS
- SINGLE SHOOT OF EELGRASS
- EXISTING ABOVE WATER TIMBER PILE DOLPHIN
- EXISTING SUBMERGED DOLPHINS

NOTE:
EELGRASS LOCATIONS TAKEN FROM PACIFIC INTERNATIONAL ENGINEERING SURVEY, JUL/AUG 2001.
BATHYMETRY (BLUE WATER ENGINEERING, 1999)

## EXISTING LOWER LEVEL PLAN

PURPOSE:
PROVIDE MOORAGE FOR VESSELS TO RECEIVE SAND AND GRAVEL BEING TRANSFERRED OFF-SHORE

DATUM: MLLW

# MAURY ISLAND PIER MODIFICATIONS

SCALE: 1"=50'

NAME: NORTHWEST AGGREGATES
ADDRESS: 5975 E. MARGINAL WAY S.
P.O. BOX 1730
SEATTLE, WA 98111

PROPOSED: REPLACEMENT BARGE LOADING STRUCTURE

IN: EAST PASSAGE
AT: MAURY ISLAND
COUNTY OF: KING
APPLICATION BY: NORTHWEST AGGREGATES

SHEET 3 OF 19 DATE: NOVEMBER 2003

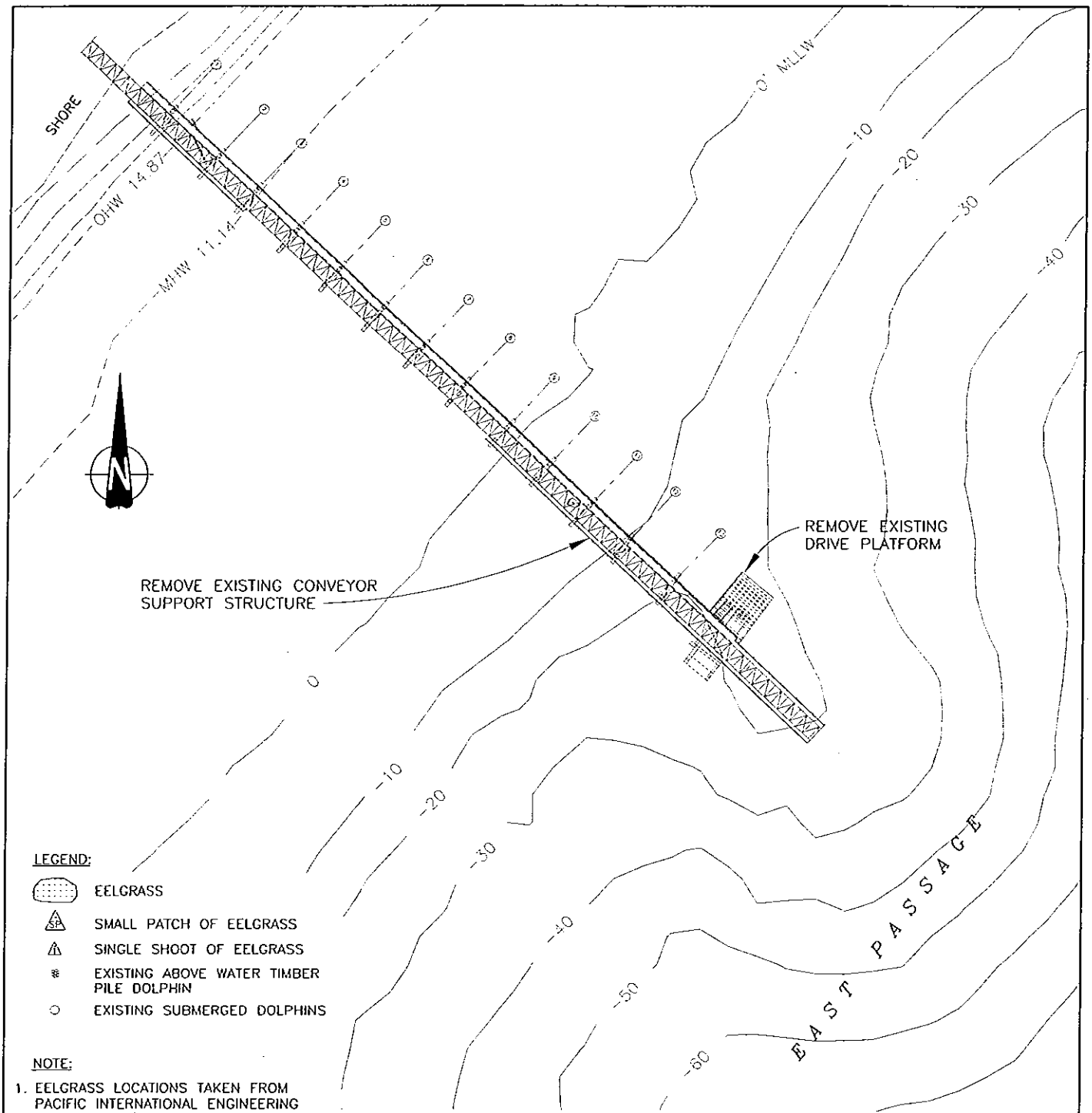


LEGEND:

- EELGRASS
- SMALL PATCH OF EELGRASS
- SINGLE SHOOT OF EELGRASS
- EXISTING ABOVE WATER TIMBER PILE DOLPHIN
- EXISTING SUBMERGED DOLPHINS

NOTE:

1. EELGRASS LOCATIONS TAKEN FROM PACIFIC INTERNATIONAL ENGINEERING SURVEY, JUL/AUG 2001.
2. BATHYMETRY (BLUE WATER ENGINEERING, 1999)
3. LOWER DOCK NOT SHOWN FOR CLARITY.

## EXISTING UPPER LEVEL PLAN

PURPOSE:
PROVIDE MOORAGE FOR VESSELS TO RECEIVE SAND AND GRAVEL BEING TRANSFERRED OFF-SHORE

DATUM: MLLW

# MAURY ISLAND PIER MODIFICATIONS

SCALE: 1"=50'

NAME: NORTHWEST AGGREGATES
ADDRESS: 5975 E. MARGINAL WAY S.
P.O. BOX 1730
SEATTLE, WA 98111

PROPOSED: REPLACEMENT BARGE LOADING STRUCTURE

IN: EAST PASSAGE
AT: MAURY ISLAND
COUNTY OF: KING
APPLICATION BY: NORTHWEST AGGREGATES

SHEET 4 OF 19 DATE: NOVEMBER 2003

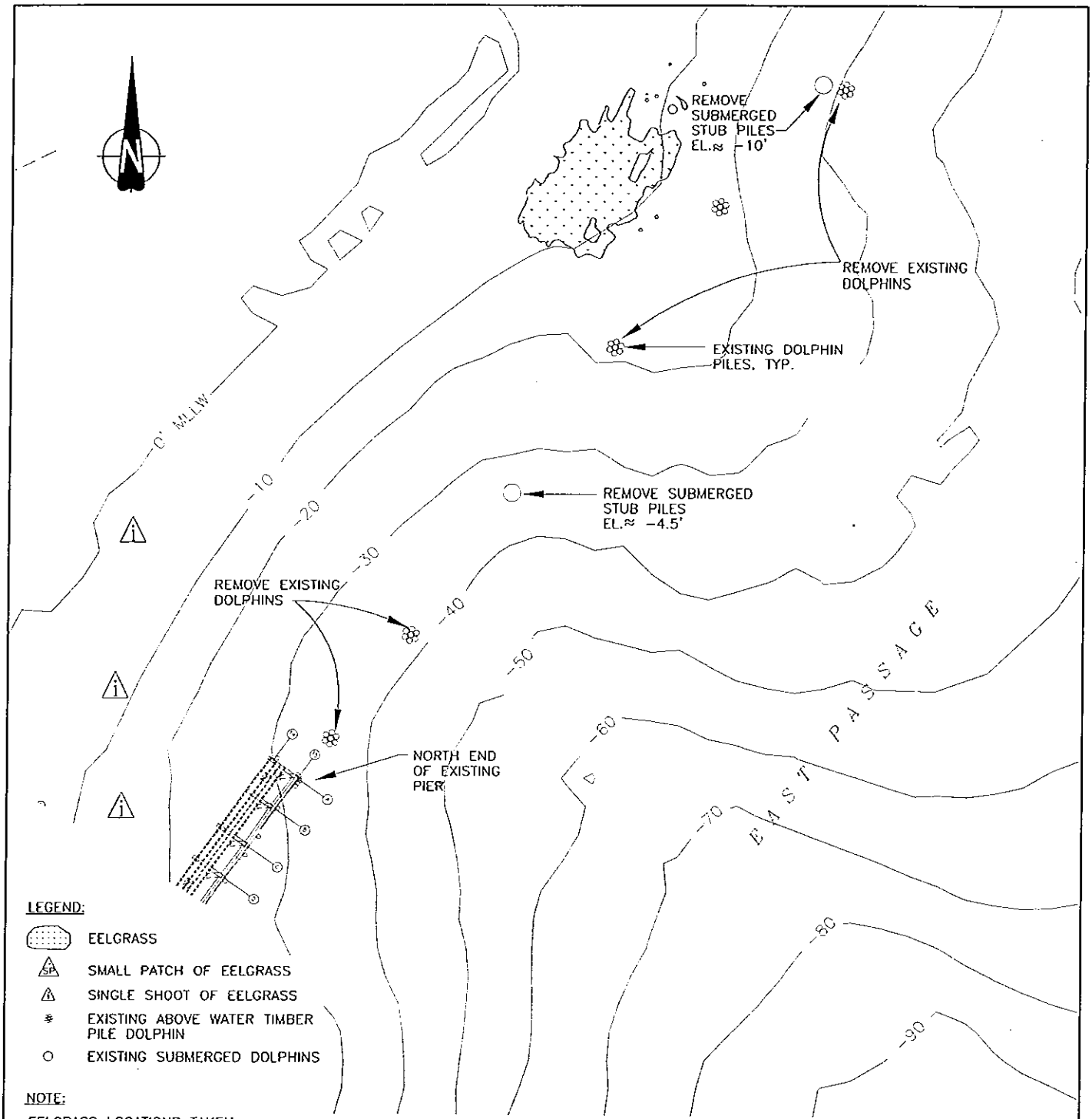


LEGEND:

- EELGRASS
- SMALL PATCH OF EELGRASS
- SINGLE SHOOT OF EELGRASS
- EXISTING ABOVE WATER TIMBER PILE DOLPHIN
- EXISTING SUBMERGED DOLPHINS

NOTE:

EELGRASS LOCATIONS TAKEN FROM PACIFIC INTERNATIONAL ENGINEERING SURVEY, JUL/AUG 2001.
BATHYMETRY (BLUE WATER ENGINEERING,1999)

## EXISTING PIER & DOLPHIN LAYOUT – NORTH

PURPOSE:
PROVIDE MOORAGE FOR VESSELS TO RECEIVE SAND AND GRAVEL BEING TRANSFERRED OFF-SHORE

DATUM: MLLW

# MAURY ISLAND PIER MODIFICATIONS

SCALE: 1"=50'

NAME: NORTHWEST AGGREGATES
ADDRESS: 5975 E. MARGINAL WAY S.
P.O. BOX 1730
SEATTLE, WA 98111

PROPOSED: REPLACEMENT BARGE LOADING STRUCTURE

IN: EAST PASSAGE
AT: MAURY ISLAND
COUNTY OF: KING
APPLICATION BY: NORTHWEST AGGREGATES

SHEET 5 OF 19 DATE: NOVEMBER 2003

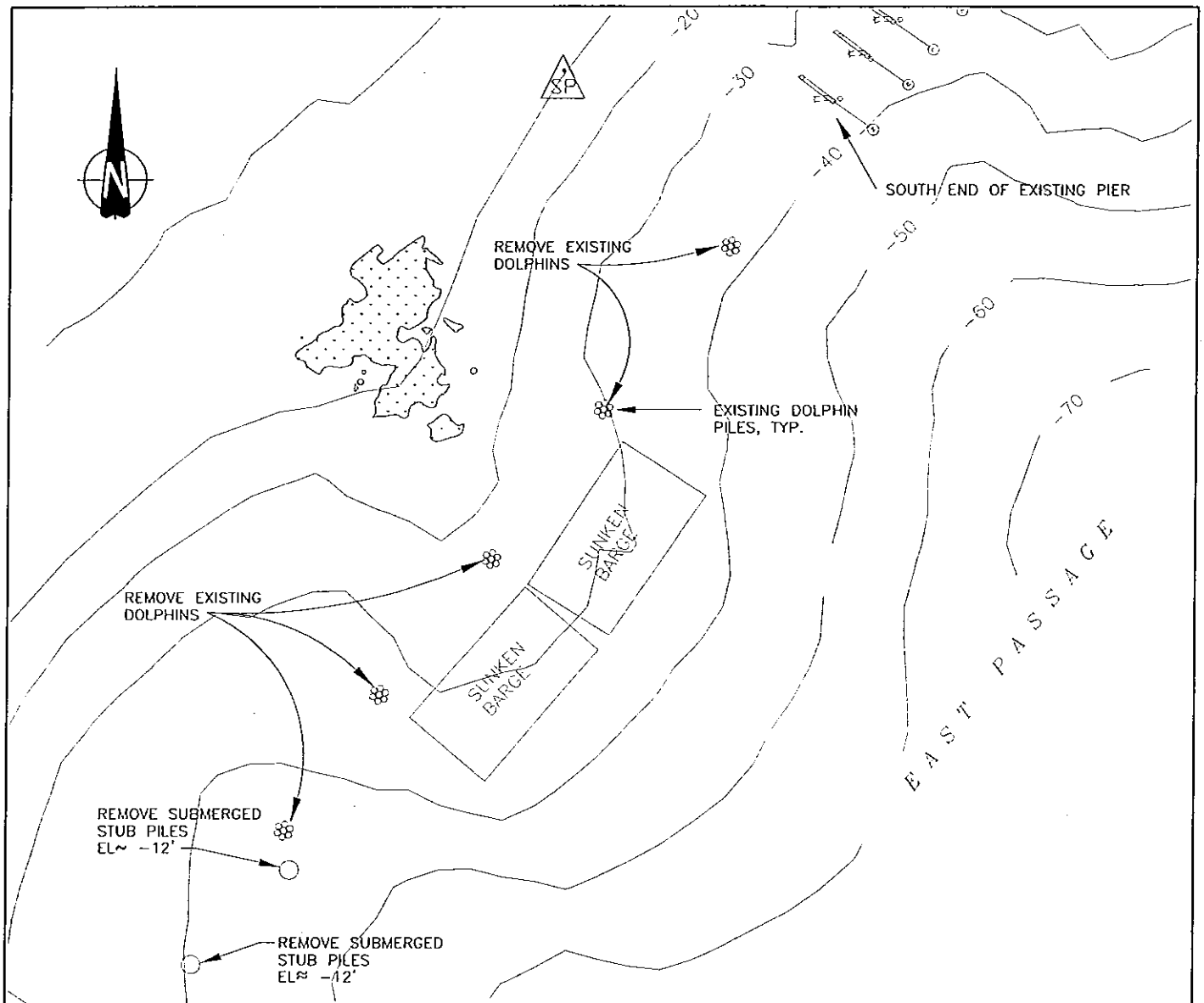


LEGEND:

- EELGRASS
- SMALL PATCH OF EELGRASS
- SINGLE SHOOT OF EELGRASS
- EXISTING ABOVE WATER TIMBER PILE DOLPHIN
- EXISTING SUBMERGED DOLPHINS

NOTE:

EELGRASS LOCATIONS TAKEN FROM PACIFIC INTERNATIONAL ENGINEERING SURVEY, JUL/AUG 2001.
BATHYMETRY (BLUE WATER ENGINEERING, 1999)

## EXISTING PIER & DOLPHIN LAYOUT – SOUTH

PURPOSE:
PROVIDE MOORAGE FOR VESSELS TO RECEIVE SAND AND GRAVEL BEING TRANSFERRED OFF-SHORE

DATUM: MLLW

# MAURY ISLAND PIER MODIFICATIONS

SCALE: 1"=50'

NAME: NORTHWEST AGGREGATES
ADDRESS: 5975 E. MARGINAL WAY S.
P.O. BOX 1730
SEATTLE, WA 98111

PROPOSED: REPLACEMENT BARGE LOADING STRUCTURE

IN: EAST PASSAGE
AT: MAURY ISLAND
COUNTY OF: KING
APPLICATION BY: NORTHWEST AGGREGATES

SHEET 6 OF 19 DATE: NOVEMBER 2003

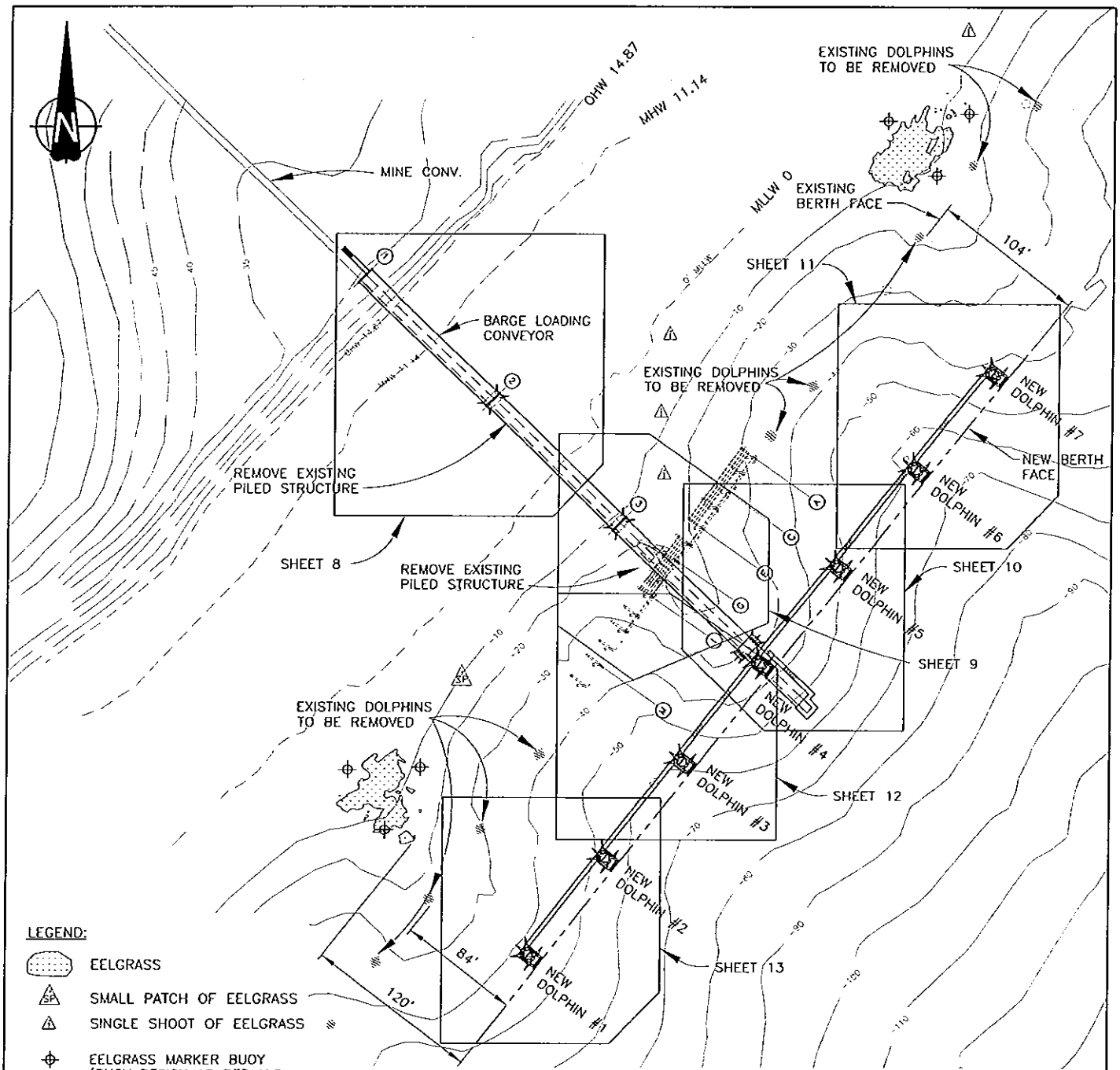


LEGEND:

- EELGRASS
- SMALL PATCH OF EELGRASS
- SINGLE SHOOT OF EELGRASS
- EELGRASS MARKER BUOY (BUOY DESIGN AS PER U.S. COASTGUARD REQUIREMENTS)

NOTE:

EELGRASS LOCATIONS TAKEN FROM PACIFIC INTERNATIONAL ENGINEERING SURVEY, JUL/AUG 2001.

## PROPOSED NEW PIER AND NEW ENCLOSED CONVEYOR KEY PLAN

NOTE:

FOR PILE SUMMARY TABLE & SURFACE AREA TABLE SEE SHEET 19

PURPOSE:
PROVIDE MOORAGE FOR VESSELS TO RECEIVE SAND AND GRAVEL BEING TRANSFERRED OFF-SHORE

DATUM: MLLW

# MAURY ISLAND PIER MODIFICATIONS

SCALE: 1"=100'

NAME: NORTHWEST AGGREGATES

ADDRESS: 5975 E. MARGINAL WAY S.
P.O. BOX 1730
SEATTLE, WA 98111

PROPOSED: REPLACEMENT BARGE LOADING STRUCTURE

IN: EAST PASSAGE
AT: MAURY ISLAND
COUNTY OF: KING
APPLICATION BY: NORTHWEST AGGREGATES

SHEET 7 OF 19 DATE: NOVEMBER 2003

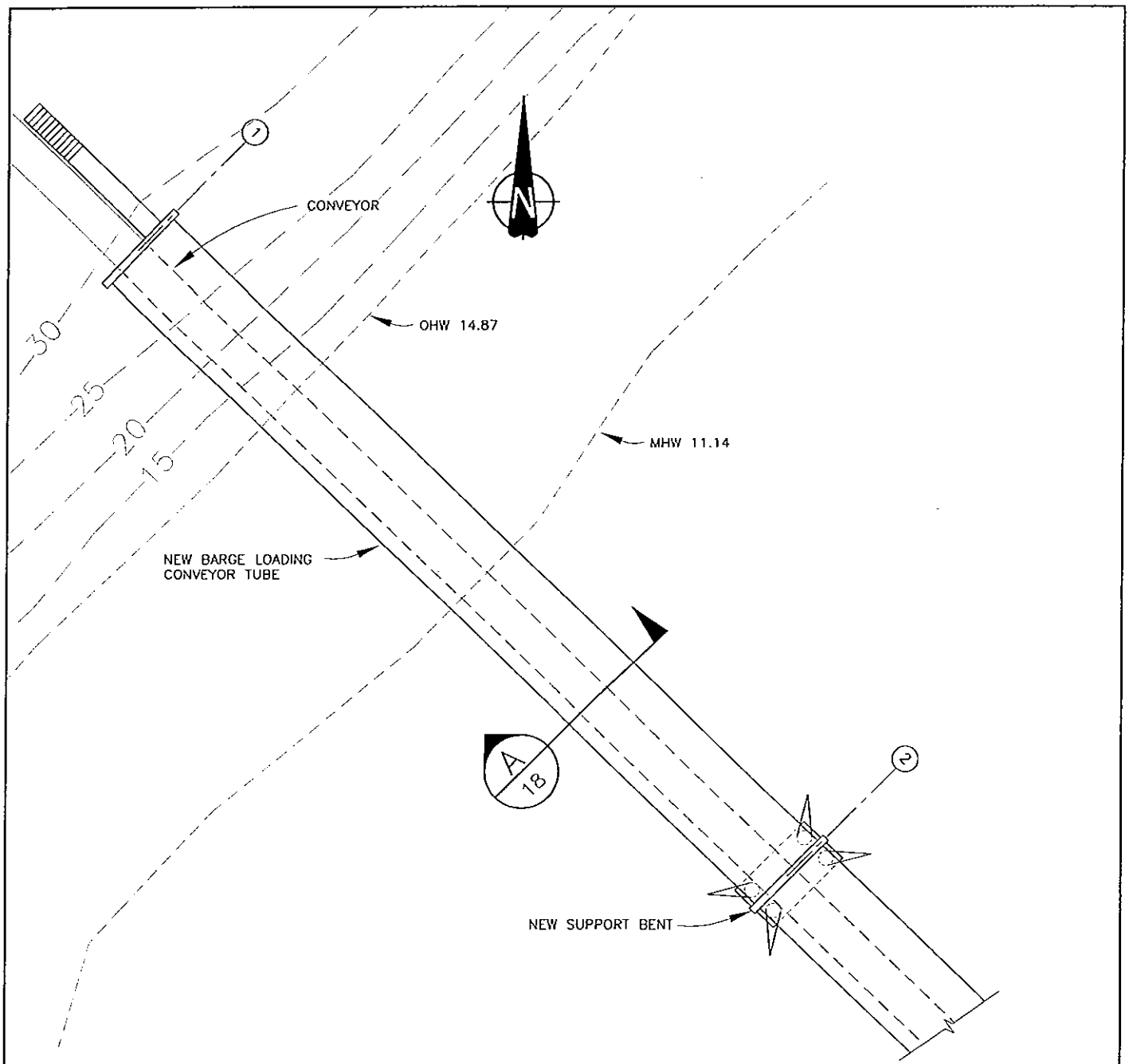


PROPOSED NEW CONVEYOR TUBE PLAN

PURPOSE:
PROVIDE MOORAGE FOR VESSELS TO RECEIVE SAND AND GRAVEL BEING TRANSFERRED OFF-SHORE

DATUM: MLLW

# MAURY ISLAND PIER MODIFICATIONS

SCALE: 1"=20'

NAME: NORTHWEST AGGREGATES

ADDRESS: 5975 E. MARGINAL WAY S.
P.O. BOX 1730
SEATTLE, WA 98111

PROPOSED: REPLACEMENT BARGE LOADING STRUCTURE

IN: EAST PASSAGE
AT: MAURY ISLAND
COUNTY OF: KING
APPLICATION BY: NORTHWEST AGGREGATES

SHEET 8 OF 19 DATE: NOVEMBER 2003

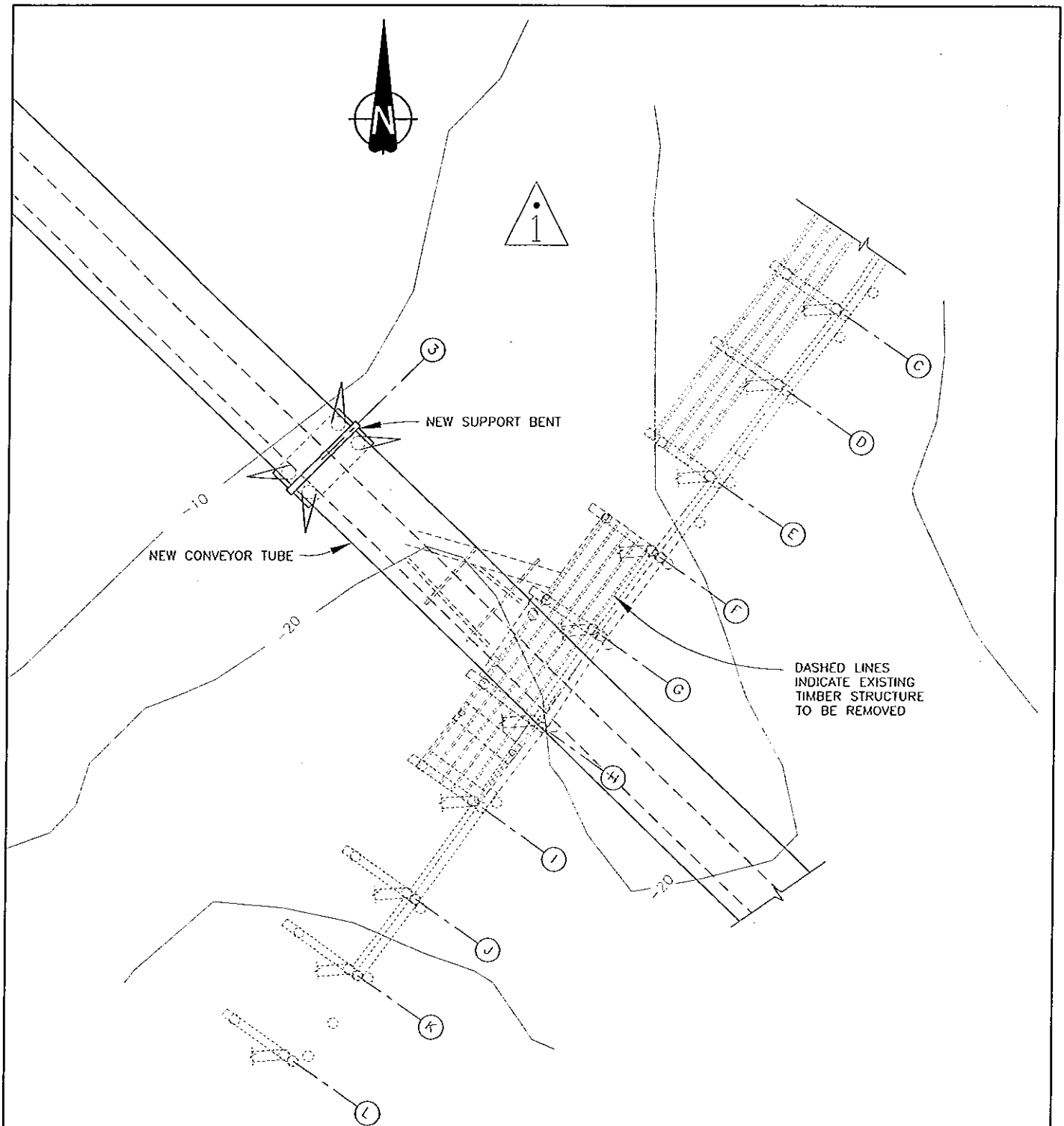


PROPOSED NEW CONVEYOR TUBE PLAN

PURPOSE:
PROVIDE MOORAGE FOR VESSELS TO RECEIVE SAND AND GRAVEL BEING TRANSFERRED OFF-SHORE

DATUM: MLLW

# MAURY ISLAND PIER MODIFICATIONS

SCALE: 1"=20'

NAME: NORTHWEST AGGREGATES

ADDRESS: 5975 E. MARGINAL WAY S.
P.O. BOX 1730
SEATTLE, WA 98111

PROPOSED: REPLACEMENT BARGE LOADING STRUCTURE

IN: EAST PASSAGE

AT: MAURY ISLAND

COUNTY OF: KING

APPLICATION BY: NORTHWEST AGGREGATES

SHEET 9 OF 19 DATE: NOVEMBER 2003

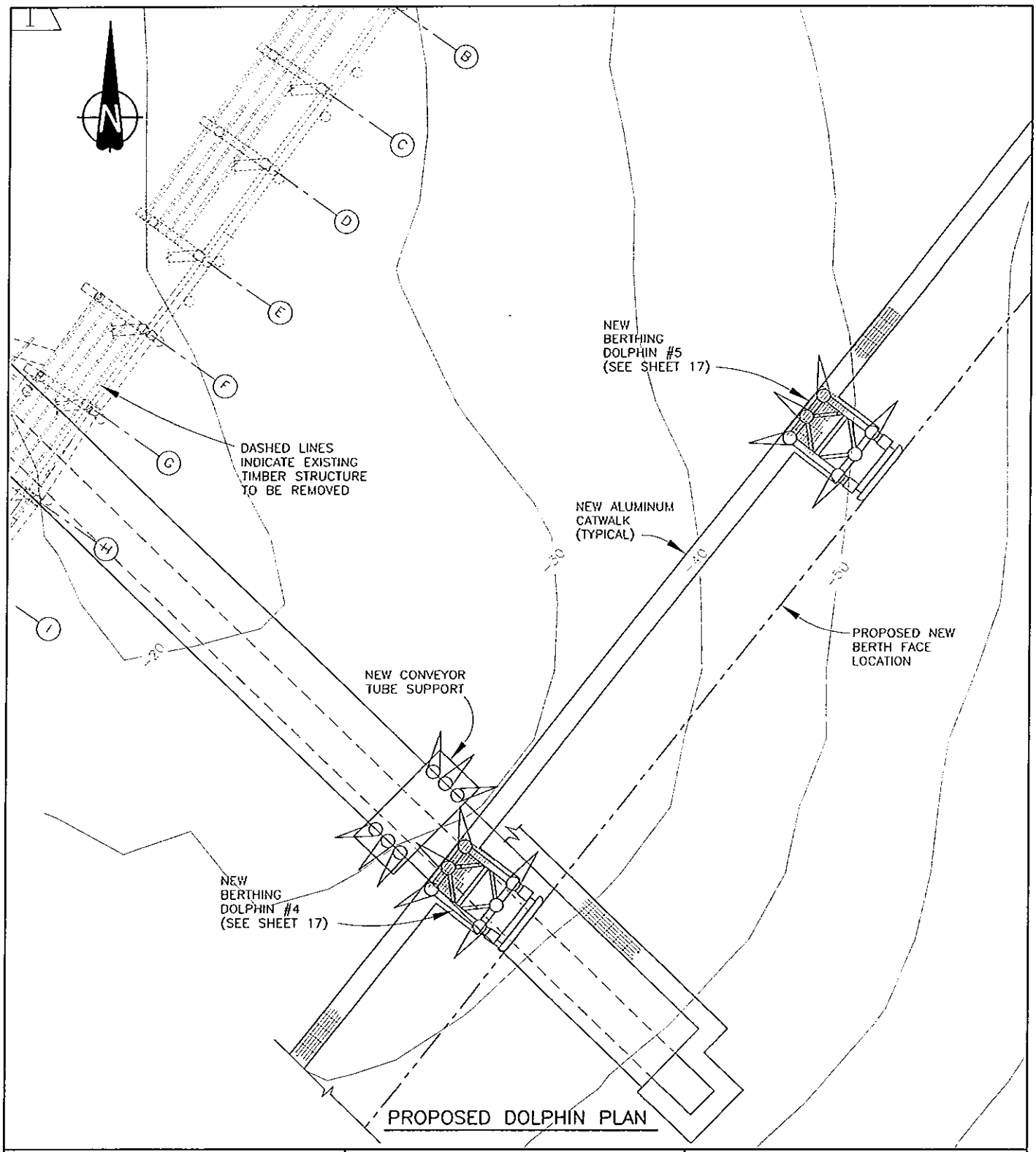


PURPOSE:
PROVIDE MOORAGE FOR VESSELS TO RECEIVE SAND AND GRAVEL BEING TRANSFERRED OFF-SHORE

DATUM: MLLW

# MAURY ISLAND PIER MODIFICATIONS

SCALE: 1"=20'

NAME: NORTHWEST AGGREGATES

ADDRESS: 5975 E. MARGINAL WAY S.
P.O. BOX 1730
SEATTLE, WA 98111

PROPOSED: REPLACEMENT BARGE LOADING STRUCTURE

IN: EAST PASSAGE
AT: MAURY ISLAND
COUNTY OF: KING
APPLICATION BY: NORTHWEST AGGREGATES

SHEET 10 OF 19 DATE: NOVEMBER 2003

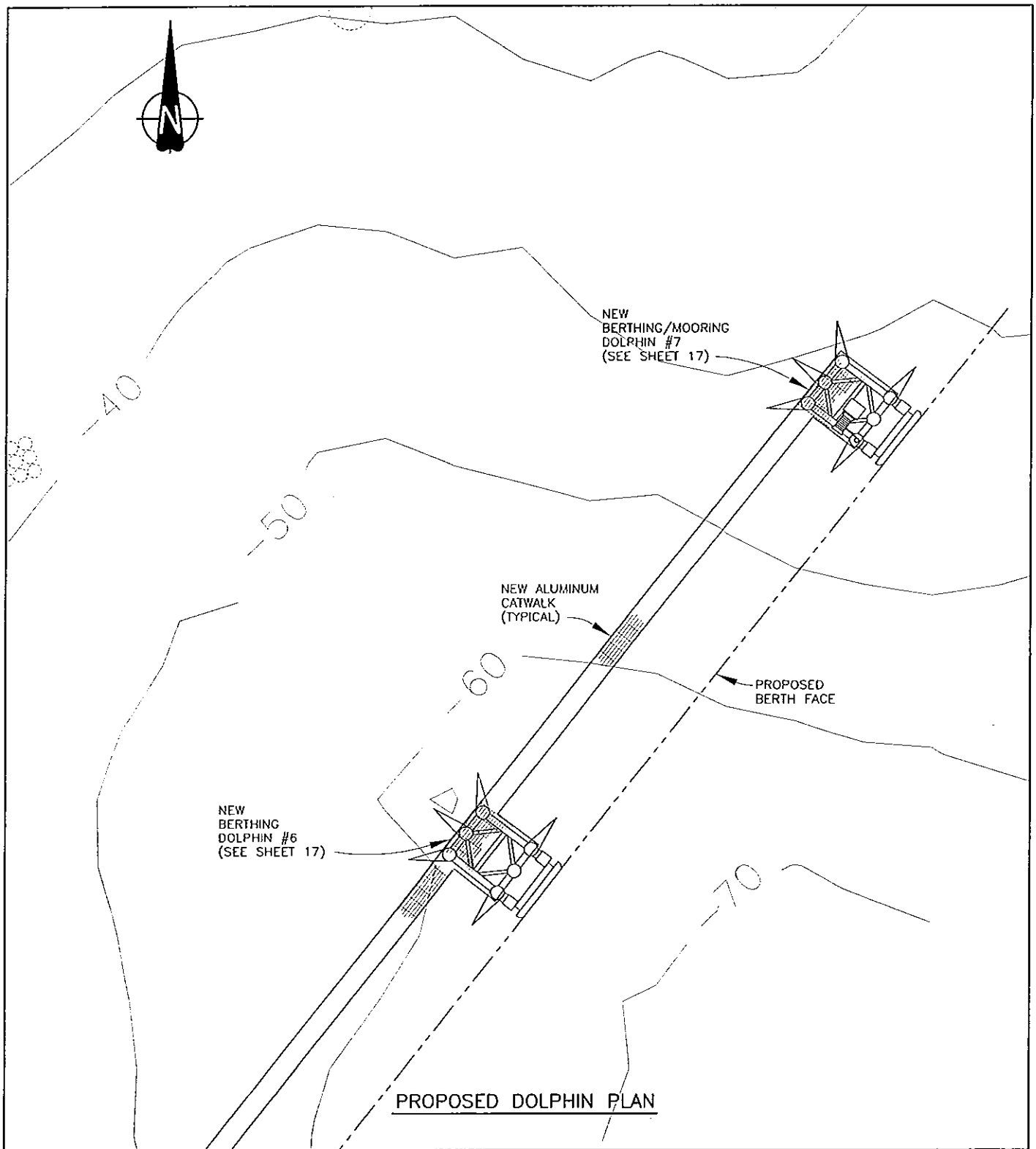


PROPOSED DOLPHIN PLAN

PURPOSE:
PROVIDE MOORAGE FOR VESSELS TO RECEIVE SAND AND GRAVEL BEING TRANSFERRED OFF-SHORE

DATUM: MLLW

# MAURY ISLAND PIER MODIFICATIONS

SCALE: 1"=20'

NAME: NORTHWEST AGGREGATES

ADDRESS: 5975 E. MARGINAL WAY S.
P.O. BOX 1730
SEATTLE, WA 98111

PROPOSED: REPLACEMENT BARGE LOADING STRUCTURE

IN: EAST PASSAGE

AT: MAURY ISLAND

COUNTY OF: KING

APPLICATION BY: NORTHWEST AGGREGATES

SHEET 11 OF 19 DATE: NOVEMBER 2003

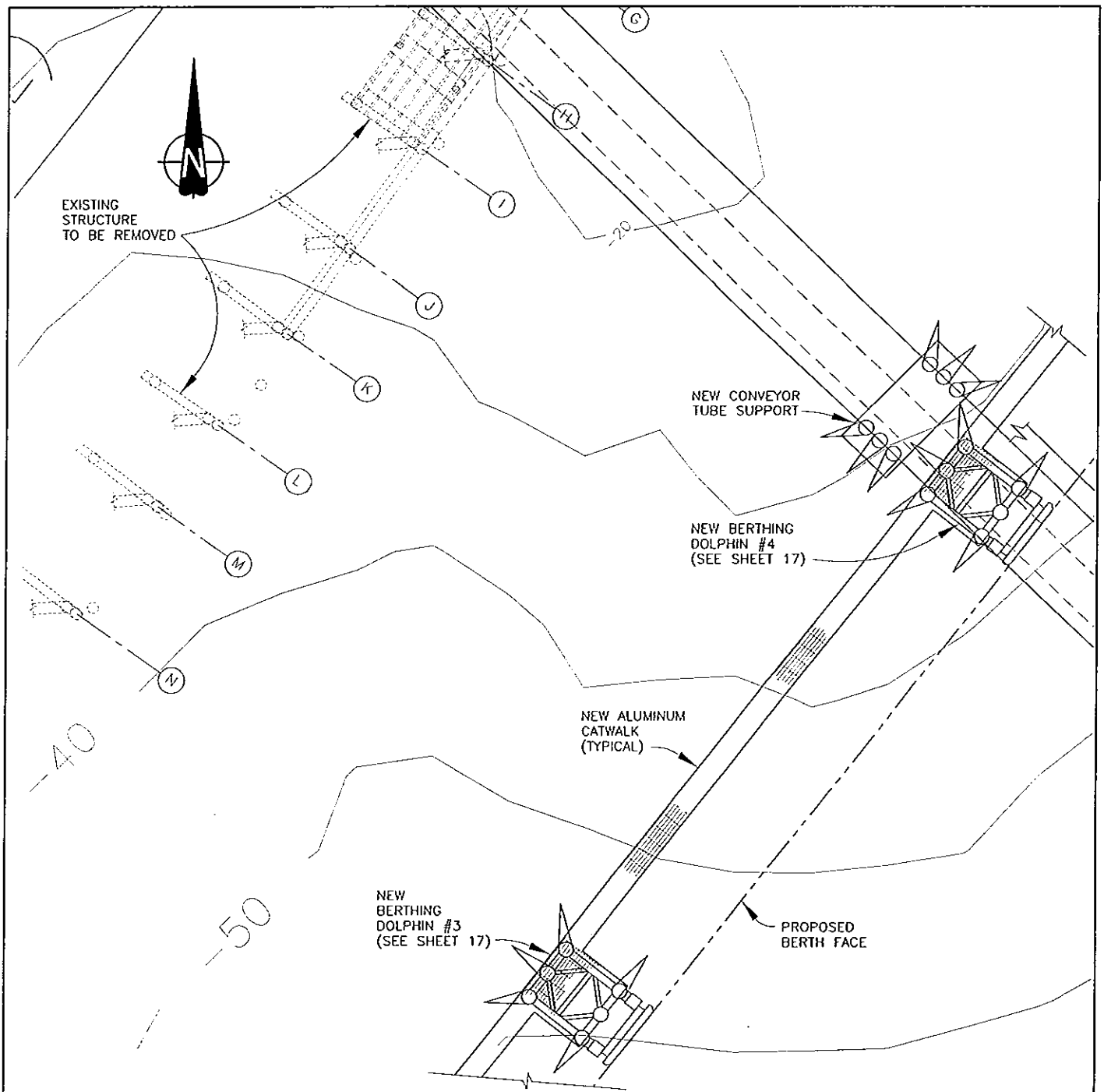


## PROPOSED DOLPHIN PLAN

PURPOSE:
PROVIDE MOORAGE FOR VESSELS TO RECEIVE SAND AND GRAVEL BEING TRANSFERRED OFF-SHORE

DATUM: MLLW

# MAURY ISLAND PIER MODIFICATIONS

SCALE: 1"=20'

NAME: NORTHWEST AGGREGATES

ADDRESS: 5975 E. MARGINAL WAY S.
P.O. BOX 1730
SEATTLE, WA 98111

PROPOSED: REPLACEMENT BARGE LOADING STRUCTURE

IN: EAST PASSAGE

AT: MAURY ISLAND

COUNTY OF: KING

APPLICATION BY: NORTHWEST AGGREGATES

SHEET 12 OF 19 DATE: NOVEMBER 2003

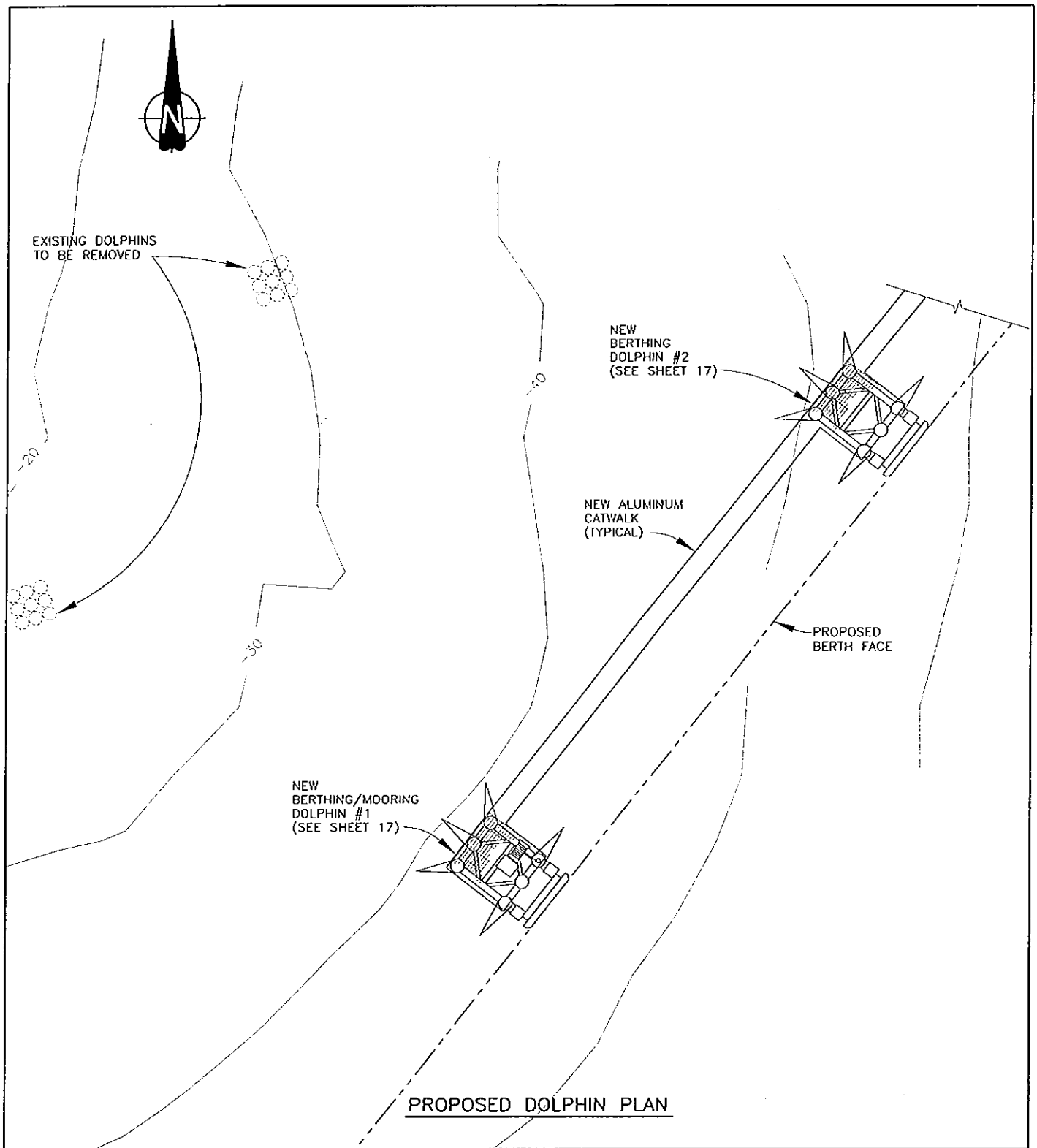


PROPOSED DOLPHIN PLAN

PURPOSE:
PROVIDE MOORAGE FOR VESSELS TO RECEIVE SAND AND GRAVEL BEING TRANSFERRED OFF-SHORE

DATUM: MLLW

# MAURY ISLAND PIER MODIFICATIONS

SCALE: 1"=20'

NAME: NORTHWEST AGGREGATES

ADDRESS: 5975 E. MARGINAL WAY S.
P.O. BOX 1730
SEATTLE, WA 98111

PROPOSED: REPLACEMENT BARGE LOADING STRUCTURE

IN: EAST PASSAGE

AT: MAURY ISLAND

COUNTY OF: KING

APPLICATION BY: NORTHWEST AGGREGATES

SHEET 13 OF 19 DATE: NOVEMBER 2003

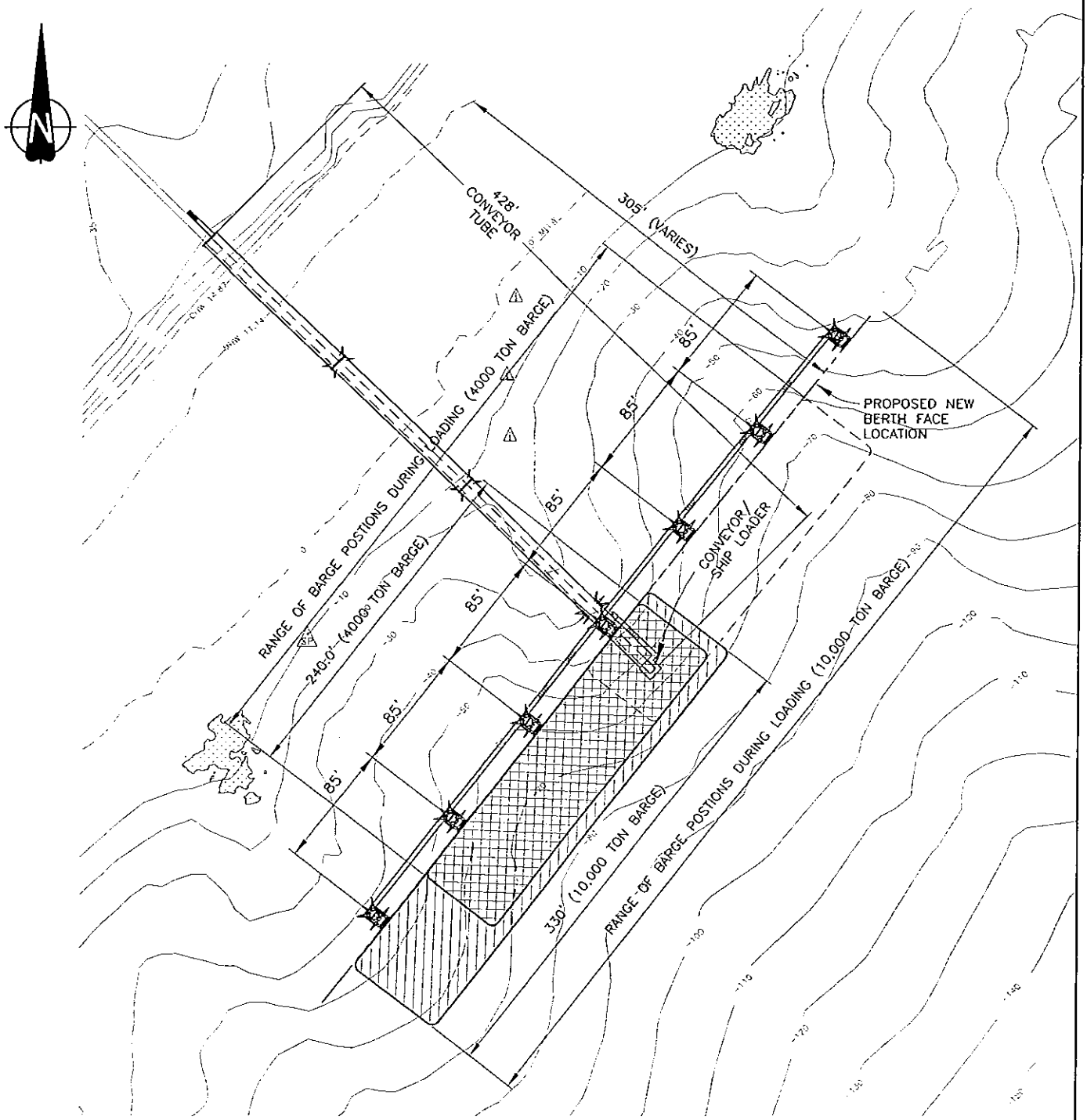


PROPOSED BARGE WARPING PLAN

| | | |
|---|---|---|
| PURPOSE:<br>PROVIDE MOORAGE FOR VESSELS TO RECEIVE SAND AND GRAVEL BEING TRANSFERRED OFF-SHORE<br><br>DATUM: MLLW | MAURY ISLAND<br>PIER MODIFICATIONS<br><br>SCALE: 1"=100'<br>NAME: NORTHWEST AGGREGATES<br>ADDRESS: 5975 E. MARGINAL WAY S.<br>P.O. BOX 1730<br>SEATTLE, WA 98111 | PROPOSED: REPLACEMENT BARGE LOADING STRUCTURE<br><br>IN: EAST PASSAGE<br>AT: MAURY ISLAND<br>COUNTY OF: KING<br>APPLICATION BY: NORTHWEST AGGREGATES<br><br>SHEET 14 OF 19 DATE: NOVEMBER 2003 |

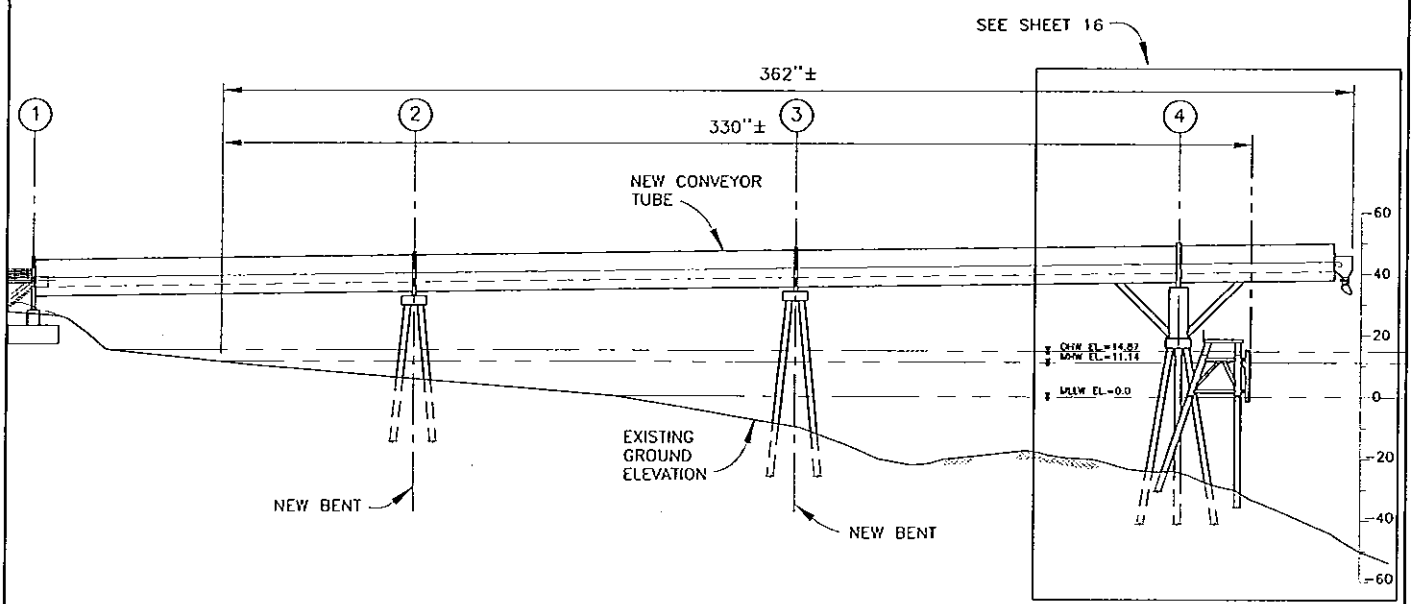


PROPOSED BARGE LOADING CONVEYOR ELEVATION

PURPOSE:
PROVIDE MOORAGE FOR VESSELS TO RECEIVE SAND AND GRAVEL BEING TRANSFERRED OFF-SHORE

DATUM: MLLW

# MAURY ISLAND PIER MODIFICATIONS

SCALE: 1"=60'

NAME: NORTHWEST AGGREGATES
ADDRESS: 5975 E. MARGINAL WAY S.
P.O. BOX 1730
SEATTLE, WA 98111

PROPOSED: REPLACEMENT BARGE LOADING STRUCTURE

IN: EAST PASSAGE
AT: MAURY ISLAND
COUNTY OF: KING
APPLICATION BY: NORTHWEST AGGREGATES

SHEET 15 OF 19 DATE: NOVEMBER 2003

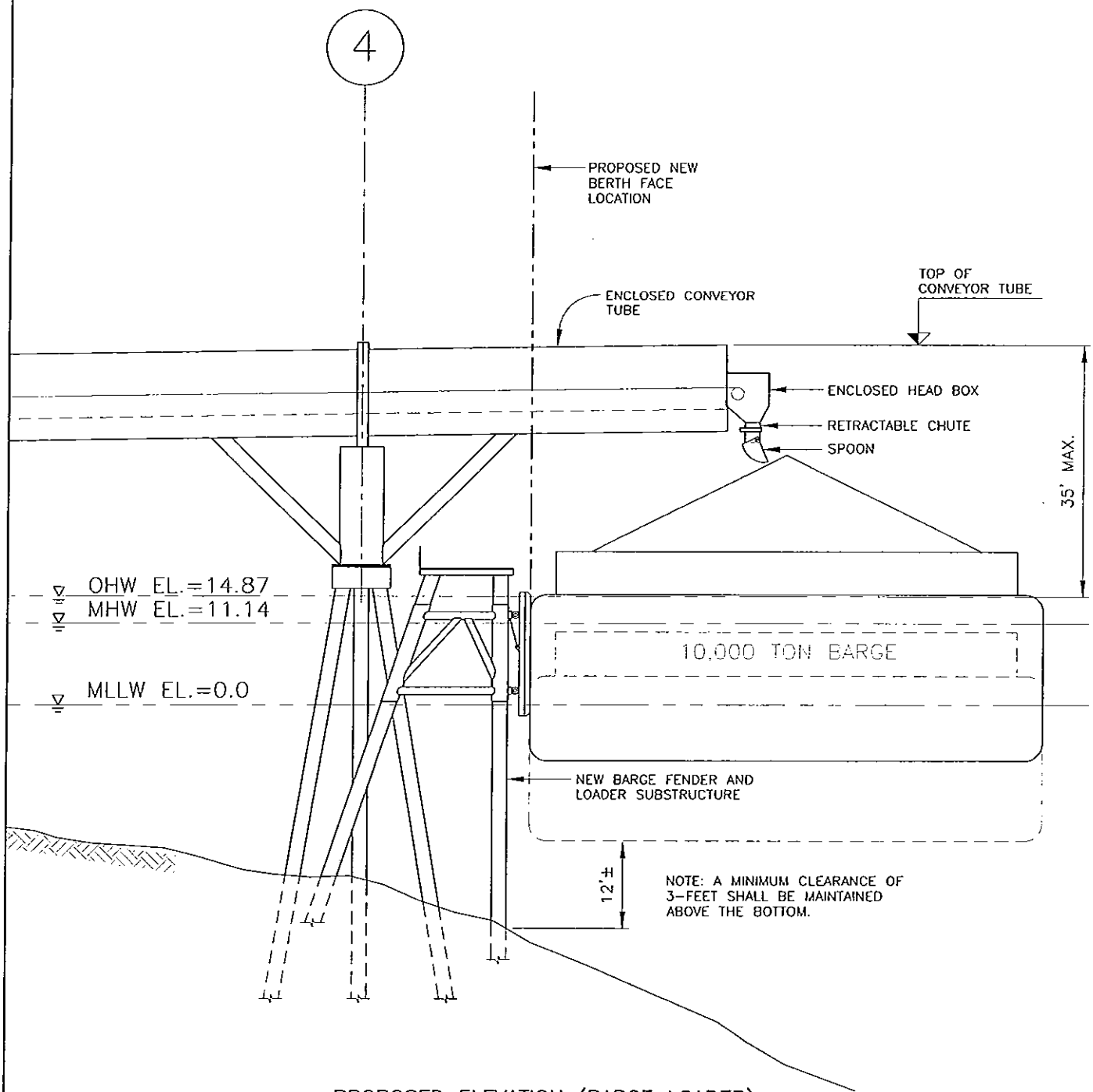


PROPOSED ELEVATION (BARGE LOADER)

PURPOSE:
PROVIDE MOORAGE FOR VESSELS TO RECEIVE SAND AND GRAVEL BEING TRANSFERRED OFF-SHORE

DATUM: MLLW

# MAURY ISLAND PIER MODIFICATIONS

SCALE: 1"=20'

NAME: NORTHWEST AGGREGATES
ADDRESS: 5975 E. MARGINAL WAY S.
P.O. BOX 1730
SEATTLE, WA 98111

PROPOSED: REPLACEMENT BARGE LOADING STRUCTURE

IN: EAST PASSAGE
AT: MAURY ISLAND
COUNTY OF: KING
APPLICATION BY: NORTHWEST AGGREGATES

SHEET 16 OF 19 DATE: NOVEMBER 2003

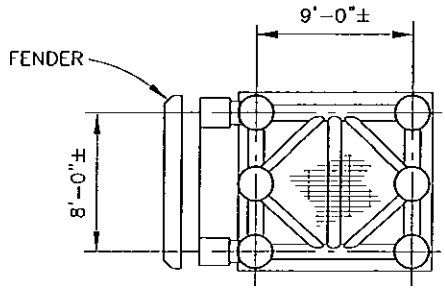


PLAN

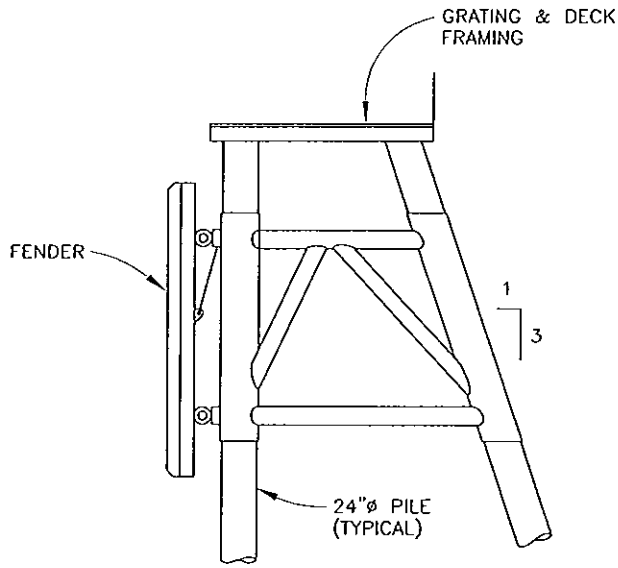


ELEVATION
(DOLPHINS #1 TO #7)

PURPOSE:
PROVIDE MOORAGE FOR VESSELS TO RECEIVE SAND AND GRAVEL BEING TRANSFERRED OFF-SHORE

# MAURY ISLAND PIER MODIFICATIONS

SCALE: 3/32"=1'-0"

NAME: NORTHWEST AGGREGATES

ADDRESS: 5975 E. MARGINAL WAY S.
P.O. BOX 1730
SEATTLE, WA 98111

PROPOSED: REPLACEMENT BARGE LOADING STRUCTURE

IN: EAST PASSAGE
AT: MAURY ISLAND
COUNTY OF: KING
APPLICATION BY: NORTHWEST AGGREGATES

SHEET 17 OF 19 DATE: NOVEMBER 2003

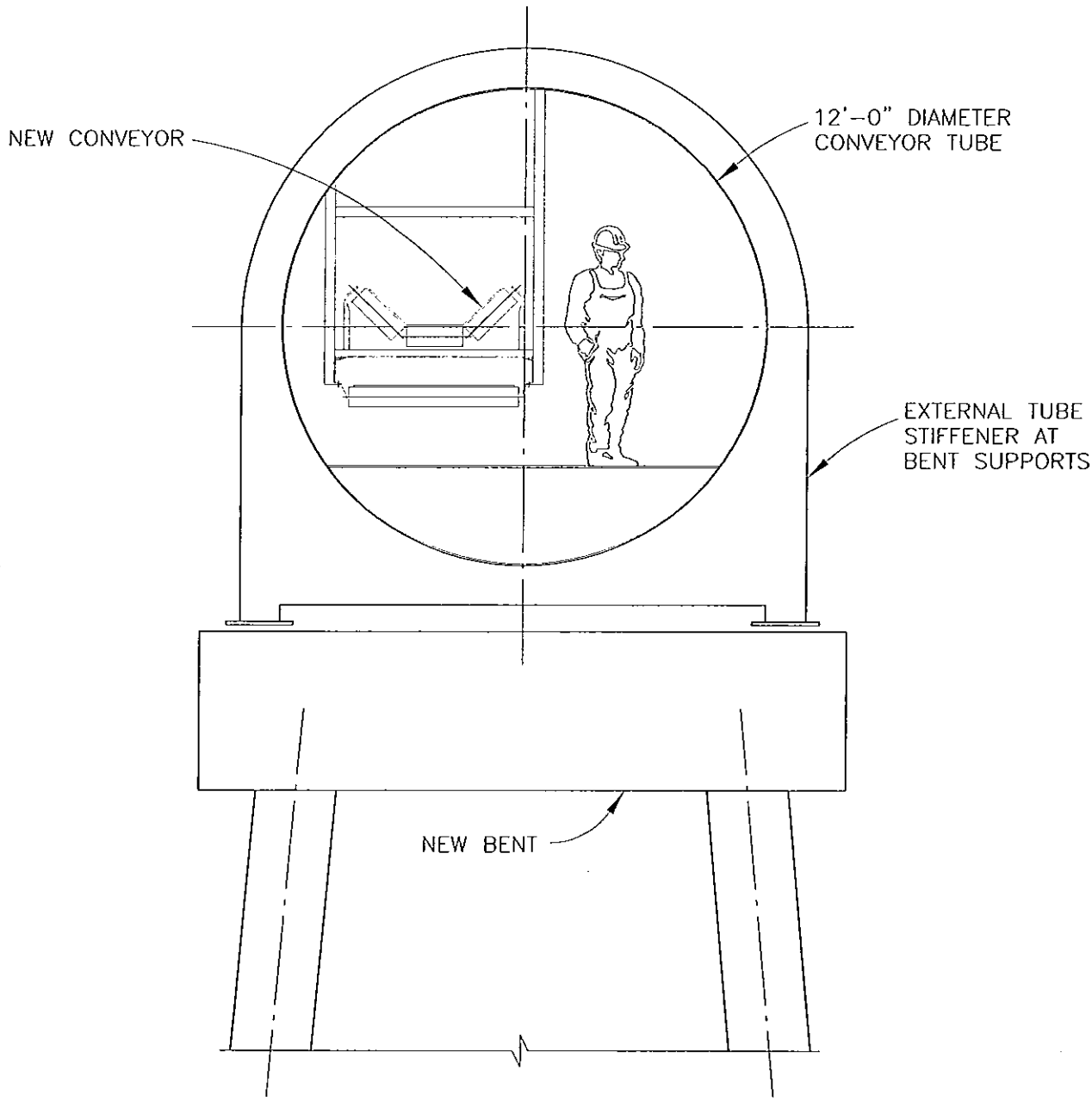


SECTION A / 8

PURPOSE:
PROVIDE MOORAGE FOR VESSELS TO RECEIVE SAND AND GRAVEL BEING TRANSFERRED OFF-SHORE

# MAURY ISLAND PIER MODIFICATIONS

SCALE: NOT TO SCALE

NAME: NORTHWEST AGGREGATES

ADDRESS: 5975 E. MARGINAL WAY S.
P.O. BOX 1730
SEATTLE, WA 98111

PROPOSED: REPLACEMENT BARGE LOADING STRUCTURE

IN: EAST PASSAGE
AT: MAURY ISLAND
COUNTY OF: KING
APPLICATION BY: NORTHWEST AGGREGATES

SHEET 18 OF 19 DATE: NOVEMBER 2003

| PILE SUMMARY TABLE | | | | | |
|---|---|---|---|---|---|
| STRUCTURE | PILE TYPE | TOTAL NUMBER OF EXISTING PILES | NUMBER OF TIMBER PILES TO BE REMOVED | NUMBER OF STEEL REPLACEMENT PILES ** | TOTAL NUMBER OF PILES AFTER REPAIRS ** |
| CONVEYOR TRESTLE | VERTICAL | 26 | 26 | 8 TO 14 | 8 TO 14 |
| PIER | VERTICAL | 32 | 32 | 0 | 0 |
| | BATTER | 18 | 18 | 0 | 0 |
| FENDER SYSTEM | FENDER | 21 | 21 | 0 | 0 |
| DOLPHINS | VERTICAL | 105 | 105 | 28 TO 42 | 28 TO 42 |
| SUBMERGED DOLPHINS | CLUSTER | 26 | 26 | 0 | 0 |
| TOTAL | | 228 PILES | 228 PILES | 36 TO 56 PILES | 36 TO 56 PILES |

| GROSS SURFACE AREA TABLE (TOTAL SF) | | | | | | | | |
|---|---|---|---|---|---|---|---|---|
| STRUCTURE | EXISTING PILES | REMOVED PILES | **ADDED PILES | ** AFTER MODIFICATIONS | EXISTING TIMBER DECK/WALKWAY | REMOVED TIMBER DECK/WALKWAY | ADDED STRUCTURE | FINAL STRUCTURE |
| CONVEYOR TRESTLE (LOWER LEVEL) | 27.1 | 27.1 | 25.1 TO 44.0 | 25.1 TO 44.0 | 2640 | 2640 | 0 | 0 |
| PIER (LOWER LEVEL) | 62.2 | 62.2 | 0 | 0 | 2520 | 2520 | 0 | 0 |
| FENDER SYSTEM | 23.5 | 23.5 | 0 | 0 | | | 0 | 0 |
| DOLPHIN | 127.4 | 127.4 | 88 TO 131.9 | 88 TO 131.9 | | | 980 | 980 |
| SUBMERGED DOLPHINS | 33.2 | 33.2 | 0 | 0 | | | 0 | 0 |
| CONVEYOR TRESTLE (UPPER LEVEL) | | | | | 3410 | 3410 | 5136 | 5136 |
| PIER | | | | | 370 | 370 | 1680* | 1680* |
| TOTALS | 273.4 | 273.4 | 113.1 TO 175.9 | 113.1 TO 175.9 | 8940 | 8940 | 7796 | 7796 |

** THE FINAL NUMBER OF PILES AND THE CORRESPONDING PILE AREA WILL BE DETERMINED DURING FINAL DESIGN AFTER DETAILED GEOTECHNICAL INFORMATION HAS BEEN OBTAINED BY SOIL BORINGS OR TEST PILES.

* OPEN-GRATED STEEL WITH 75% OPEN AREA

PURPOSE:
PROVIDE MOORAGE FOR VESSELS TO RECEIVE SAND AND GRAVEL BEING TRANSFERRED OFF-SHORE

# MAURY ISLAND PIER MODIFICATIONS

SCALE: NOT TO SCALE

NAME: NORTHWEST AGGREGATES
ADDRESS: 5975 E. MARGINAL WAY S.
P.O. BOX 1730
SEATTLE, WA 98111

PROPOSED: REPLACEMENT BARGE LOADING STRUCTURE

IN: EAST PASSAGE
AT: MAURY ISLAND
COUNTY OF: KING
APPLICATION BY: NORTHWEST AGGREGATES

SHEET 19 OF 19 DATE: NOVEMBER 2003

STATE OF WASHINGTON
DEPARTMENT OF ECOLOGY
*P.O. Box 47600 • Olympia, Washington 98504-7600*
*(360) 407-6000 • TDD Only (Hearing Impaired) (360) 407-6006*

STATE OF WASHINGTON
DEPARTMENT OF ECOLOGY

Notice of Application for
Certification of Consistency with the
Washington Coastal Zone Management Program

Date: December 13, 2004

Notice is herby given that a request has been filed with the Department of Ecology, pursuant to the requirements of Section 307© of the federal Coastal Zone Management Act of 1972(16 U.S.C. 1451), to certify that the project described in the U.S. Army Corps of Engineers Public Notice No. 200001094 will comply with the Washington State Coastal Zone Management Program and that the project will be conducted in a manner consistent with that Program.

Any person desiring to present views on the project pertaining to the project's compliance or consistency with the Washington State Coastal Zone Management Program may do so by providing written comments within 30 days of the above publication date to:

Federal Permit Coordinator
Department of Ecology
SEA Program
Post Office Box 47600
Olympia, Washington 98504-7600