US Army Corps
of Engineers
Seattle District

Public Notice of Application for Permit

Regulatory Branch
Post Office Box 3755
Seattle, Washington 98124-3755
Telephone (206) 764-3495
ATTN: Ron Wilcox, Project Manager

Public Notice Date: January 27, 2005
Expiration Date: February 27, 2005
Reference: 200401176
Name: Babich, Randall; Arabella's

Interested parties are hereby notified that an application has been received for a Department of the Army permits in accordance with Section 10 of the Rivers and Harbors Act of March 3, 1899, for certain work described below and shown on the enclosed drawings.

APPLICANT: Mr. Randall Babich
2914 Harborview Drive
Gig Harbor, Washington 98335
Telephone: (253) 884-4355

Arabella's South Dock
3323 Harborview Drive
Gig Harbor, Washington 98335
ATTN: Mr. John Moist
Telephone: (253) 851-1793

AGENT: Layton & Sell, Inc., P.S.
12515 Willows Road, Suite 205
Kirkland, Washington 98034-8795
ATTN: Mr. Jeffrey A. Layton, P.E.
Telephone: (425) 825-1735

LOCATION: Two project locations sited approximately 1/3 of a mile apart (Babich and Arabella) in Gig Harbor, at Gig Harbor, Washington.

WORK: construction of a new marine facility at the Babich site includes: installation of a 10 foot by 100 foot concrete float, a 4 foot by 45 foot aluminum ramp, drive six 18-20 inch steel guide piling, and convert 600 square feet of an existing net and gear storage building to a mini-mart general store for boaters only. At the Arabella site work includes: reconfiguration of an existing L-shaped float 15 feet northward attaching it to an existing pier, drive four 20-inch steel guide piles and installation of a 4 foot by 26-foot aluminum bridge.

PURPOSE: to provide a marine fueling facility at the Babich site and to provide additional accessible vessel moorage at the Arabella site.

ADDITIONAL INFORMATION: the concrete floating dock, aluminum ramp and four steel piling for the Babich site will be relocated by tug from the Arabella site 1/3 of a mile north.

ENDANGERED SPECIES: The Endangered Species Act (ESA) requires federal agencies to consult with the National Marine Fisheries Service (NMFS) and/or U.S. Fish and Wildlife Service (USFWS) pursuant to Section 7 of ESA on all actions that may affect a species listed (or proposed for listing) under the ESA as threatened or endangered or any designated critical habitat. The Puget Sound chinook (*Oncorhynchus tshawytscha*), threatened; Coastal/Puget Sound bull trout (*Salvelinus confluentus*), threatened; Hood Canal summer chum (*Oncorhynchus keta*), threatened; Steller sea lion (*Eumetopias jubatus*), threatened; Humpback Whale

(*Megaptera novaeangliae*), endangered; Bald eagle (*Haliaeetus leucocephalus*) threatened; Marbled murrelet (*Brachyramphus marmoratus*), threatened; Southern Resident Killer whale (Orcinus Orca), proposed threatened in the state of Washington, may occur in the proposed project area. For Puget Sound chinook and Coastal/Puget Sound bull trout, critical habitat has been proposed.

A preliminary determination indicates that the activity "may affect, not likely to adversely affect" endangered or threatened species, or their critical habitat, designated or proposed under the Endangered Species Act of 1973. Informal consultation under Section 7 of the ESA has been initiated with the NMFS and/or the USFWS.

ESSENTIAL FISH HABITAT: The Magnuson-Stevens Fishery Conservation and Management Act, as amended by the Sustainable Fisheries Act of 1996, requires all Federal agencies to consult with the NMFS on all actions, or proposed actions, permitted, funded, or undertaken by the agency, that may adversely affect Essential Fish Habitat (EFH). The proposed action would impact approximately 1300 square feet of EFH for Pacific salmon, Groundfish, and Coastal Pelagic Species in the project area.

The U.S. Army Corps of Engineers (Corps) has determined that the proposed action will not adversely affect designated EFH for federally managed fisheries in Washington waters. No further EFH consultation is necessary.

CULTURAL RESOURCES: The District Engineer has reviewed the latest published version of the National Register of Historic Places, lists of properties determined eligible and other sources of information. There are no recorded historic properties within the permit area. The permit area has been so extensively modified by modern development that little likelihood exists for the proposed project to impinge upon an undisturbed historic property. The District Engineer invites responses to this public notice from Native American Nations or tribal governments; Federal, State, and local agencies; historical and archeological societies; and other parties likely to have knowledge of or concerns with historic properties in the area. This public notice initiates consultation under Section 106 of the National Historic Preservation Act (36 CFR 800.4[a] [3]), with any Tribe that has information or concerns with historic properties in the proposed permit area.

PUBLIC HEARING: Any person may request, in writing, within the comment period specified in this notice, that a public hearing be held to consider this application. Requests for public hearings shall state, with particularity, the reasons for holding a public hearing.

EVALUATION: The decision whether to issue a permit will be based on an evaluation of the probable impacts, including cumulative impacts, of the proposed activity on the public interest. That decision will reflect the national concern for both protection and utilization of important resources. The benefits, which reasonably may be expected to accrue from the proposal, must be balanced against its reasonably foreseeable detriments. All factors which may be relevant to the proposal will be considered, including the cumulative effects thereof; among those are conservation, economics, aesthetics, general environmental concerns, wetlands, historic properties, fish and wildlife values, flood hazards, floodplain values, land use, navigation, shoreline erosion and accretion, recreation, water supply and conservation, water quality, energy needs, safety, food and fiber production, mineral needs, considerations of property ownership, and, in general, the needs and welfare of the people.

The U.S. Army Corps of Engineers is soliciting comments from the public; Native American Nations or tribal governments; Federal, State, and local agencies and officials; and other interested parties in order to consider and evaluate the impacts of this activity. Any comments received will be considered by the Corps to determine whether to issue, modify, condition or deny a permit for the work. To make this decision, comments are used to assess impacts on endangered species, historic properties, water quality, general environmental effects, and the other public interest factors listed above. Comments are used in the

preparation of an Environmental Assessment and/or an Environmental Impact Statement pursuant to the National Environmental Policy Act. Comments are also used to determine the need for a public hearing and to determine the overall public interest of the activity.

ADDITIONAL EVALUATION: The State of Washington is reviewing this work (for consistency with the approved Washington Coastal Zone Management Program) (and for compliance with the applicable State and Federal water quality standards pursuant to Section 401 of the Clean Water Act).

This proposal is the subject of Shorelines Substantial Development Permit, being processed by the City of Gig Harbor.

COMMENT AND REVIEW PERIOD – Conventional mail or e-mail comments on this public notice will be accepted and made part of the record and will be considered in determining whether it would be in the public interest to authorize this proposal. In order to be accepted, e-mail comments must originate from the author's e-mail account and must include on the subject line of the e-mail message the permit applicant's name and reference number as shown below. All e-mail comments should be sent to ronald.j.wilcox@usace.army.mil. Conventional mail comments should be sent to U.S. Army Corps of Engineers, Regulatory Branch, Post Office Box 3755, Seattle, Washington, 98124-3755. Both conventional mail and e-mail comments must include the permit applicant's name and reference number, as shown below, and the commentor's name, address, and phone number. All comments whether conventional mail or e-mail must reach this office, no later than the expiration date of this public notice to ensure consideration. Please include the following name and reference number:

Babich, Randall; Arabella's, 200401176

Encl
Drawings (11)

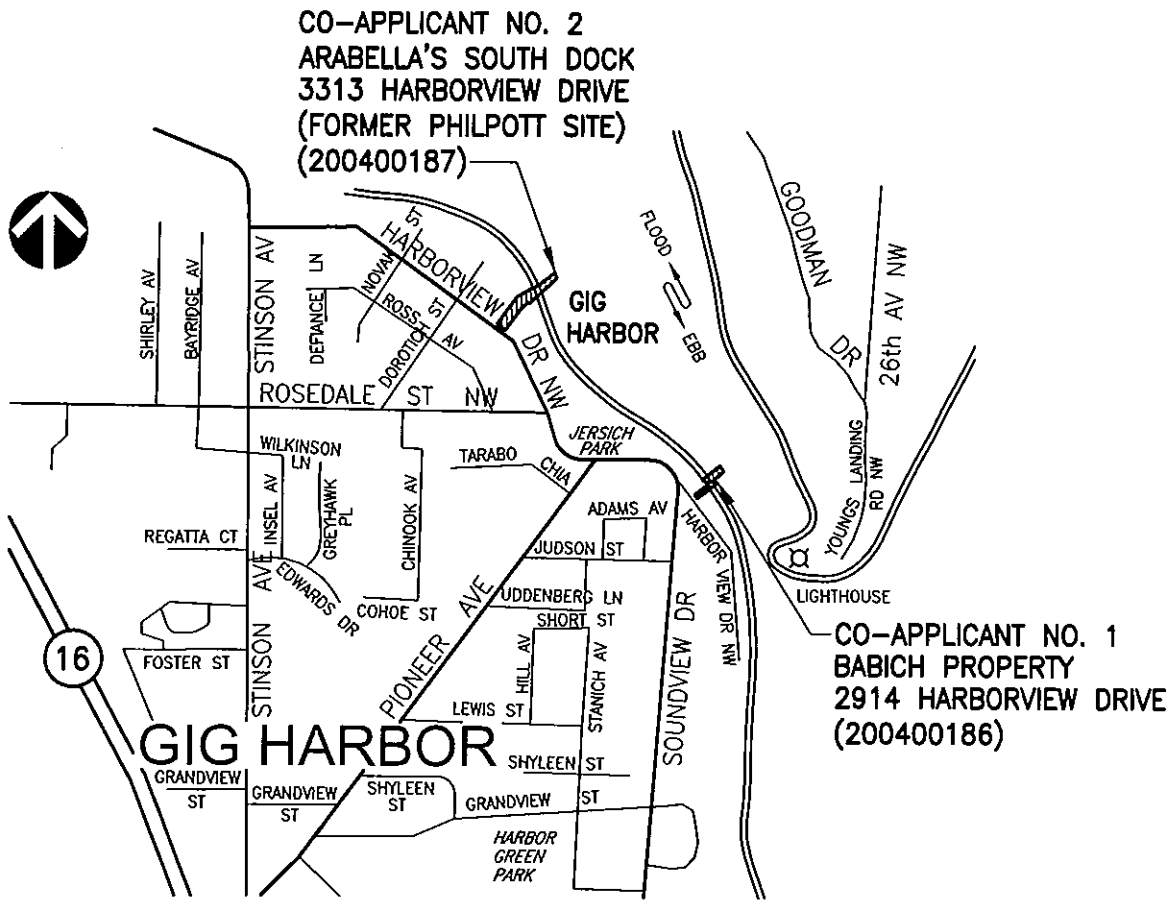

VICINITY MAP

1/8 1/2 MILE

0 1/4

PROJECT LOCATION: BABICH PROPERTY
3313 HARBORVIEW DRIVE
LAT: = 47°19'45"
LONG: = 122°34'38"

PROJECT LOCATION: ARABELLAS SOUTH DOCK
2914 HARBORVIEW DRIVE
LAT = 47°20'20"
LONG = 122°35'24"

PURPOSE: PROPOSED MARINE FUEL FACILITY RELOCATION AND MOORAGE RECONFIGURATION

DATUM: MLLW=0.00'

200400186
AND
200400187

PROPOSED MARINE FUEL FACILITY
RELOCATION AND MOORAGE
RECONFIGURATION
IN: GIG HARBOR
AT: GIG HARBOR
COUNTY: PIERCE
STATE: WASHINGTON
APPL. BY: RANDALL BABICH &
GIG HARBOR MARINA INC.
SHEET: 1 OF 11 DATE: 12/12/2003
REV: 02/13/2004, 07/26/04

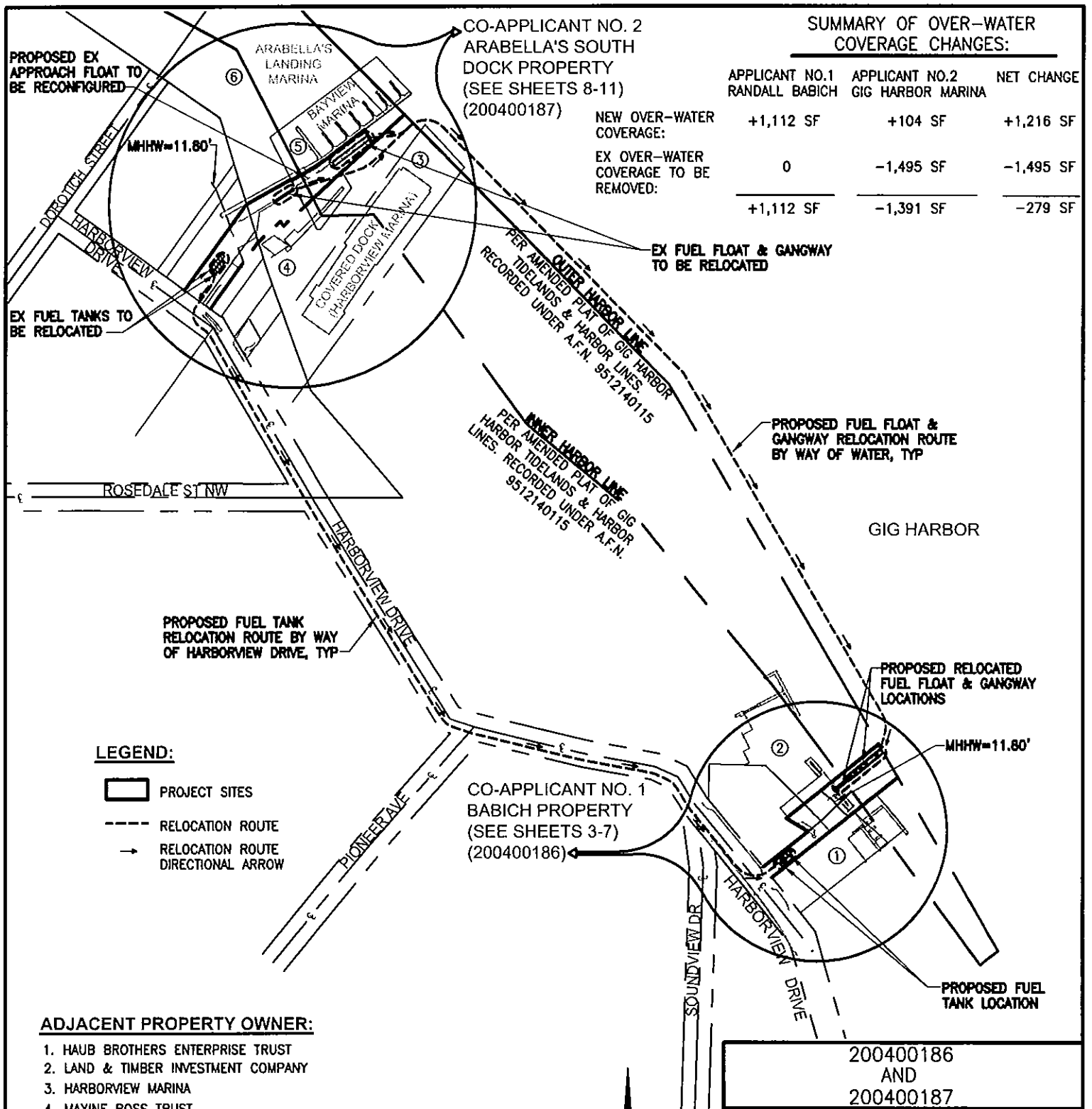

SUMMARY OF OVER-WATER COVERAGE CHANGES:

	APPLICANT NO.1 RANDALL BABICH	APPLICANT NO.2 GIG HARBOR MARINA	NET CHANGE
NEW OVER-WATER COVERAGE:	+1,112 SF	+104 SF	+1,216 SF
EX OVER-WATER COVERAGE TO BE REMOVED:	0	-1,495 SF	-1,495 SF
	+1,112 SF	-1,391 SF	-279 SF

200400186
AND
200400187

PROPOSED MARINE FUEL FACILITY
RELOCATION AND MOORAGE
RECONFIGURATION
IN: GIG HARBOR
AT: GIG HARBOR
COUNTY: PIERCE
STATE: WASHINGTON
APPL. BY: RANDALL BABICH &
GIG HARBOR MARINA INC.
SHEET: 2 OF 11 DATE: 12/12/2003
REV: 02/13/2004, 07/26/04

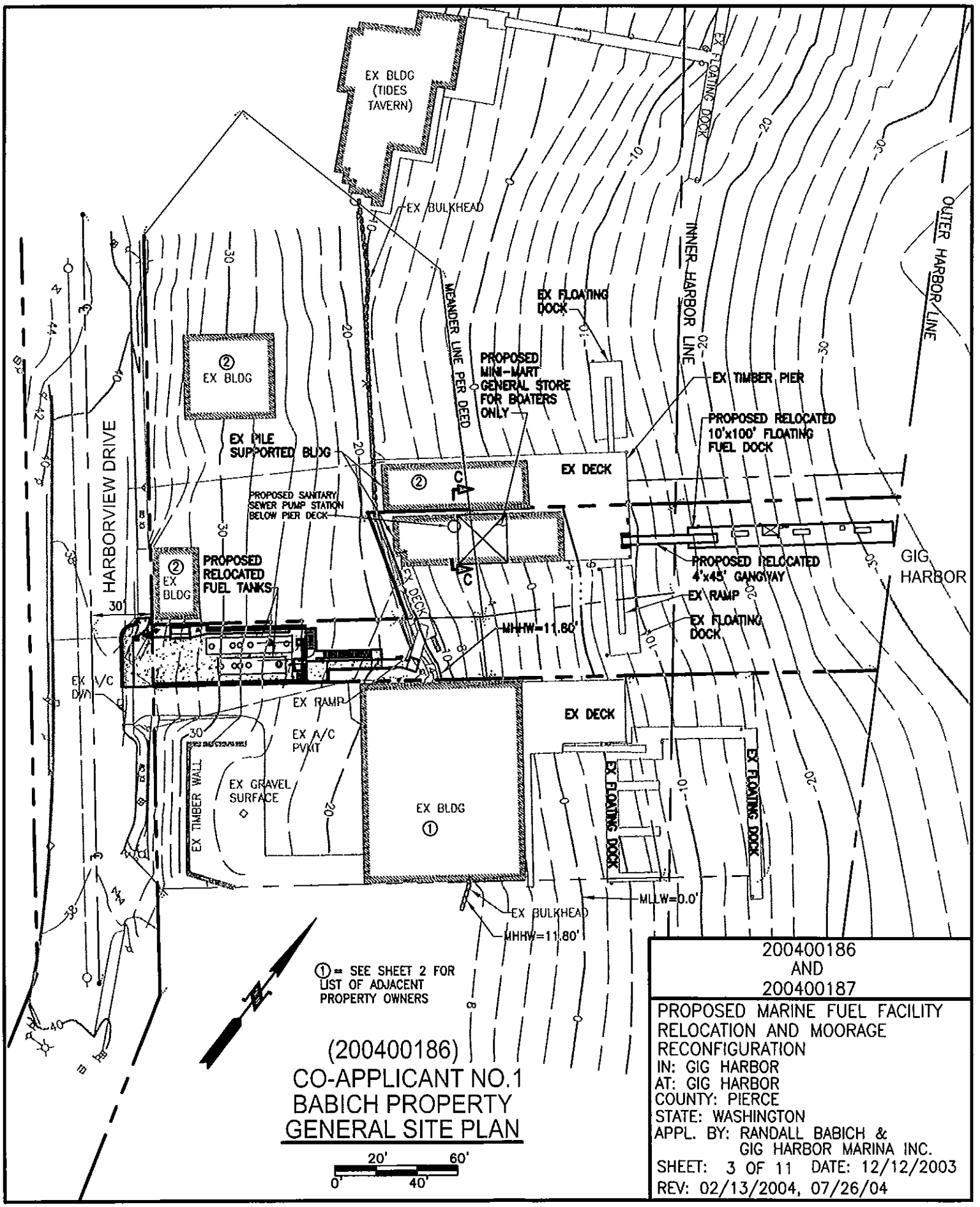
EX BLDG (TIDES TAVERN)
EX FLOATING DOCK
EX BULKHEAD
INNER HARBOR LINE
OUTER HARBOR LINE
MEANDER LINE PER DEED
EX FLOATING DOCK
PROPOSED MINI-MART GENERAL STORE FOR BOATERS ONLY
EX TIMBER PIER
PROPOSED RELOCATED 10'x100' FLOATING FUEL DOCK
EX BLDG
EX PILE SUPPORTED BLDG
EX DECK
PROPOSED SANITARY SEWER PUMP STATION BELOW PIER DECK
HARBORVIEW DRIVE
PROPOSED RELOCATED FUEL TANKS
EX BLDG
PROPOSED RELOCATED 4'x45' GANGWAY
GIG HARBOR
EX RAMP
EX FLOATING DOCK
MHHW=11.80'
EX DECK
EX RAMP
EX A/C PVKIT
EX GRAVEL SURFACE
EX TIMBER WALL
EX BLDG
EX FLOATING DOCK
EX FLOATING DOCK
MLLW=0.0'
EX BULKHEAD
MHHW=11.80'
① = SEE SHEET 2 FOR LIST OF ADJACENT PROPERTY OWNERS
(200400186)
CO-APPLICANT NO.1
BABICH PROPERTY
GENERAL SITE PLAN
20' 60'
0' 40'
200400186
AND
200400187
PROPOSED MARINE FUEL FACILITY
RELOCATION AND MOORAGE
RECONFIGURATION
IN: GIG HARBOR
AT: GIG HARBOR
COUNTY: PIERCE
STATE: WASHINGTON
APPL. BY: RANDALL BABICH &
GIG HARBOR MARINA INC.
SHEET: 3 OF 11 DATE: 12/12/2003
REV: 02/13/2004, 07/26/04

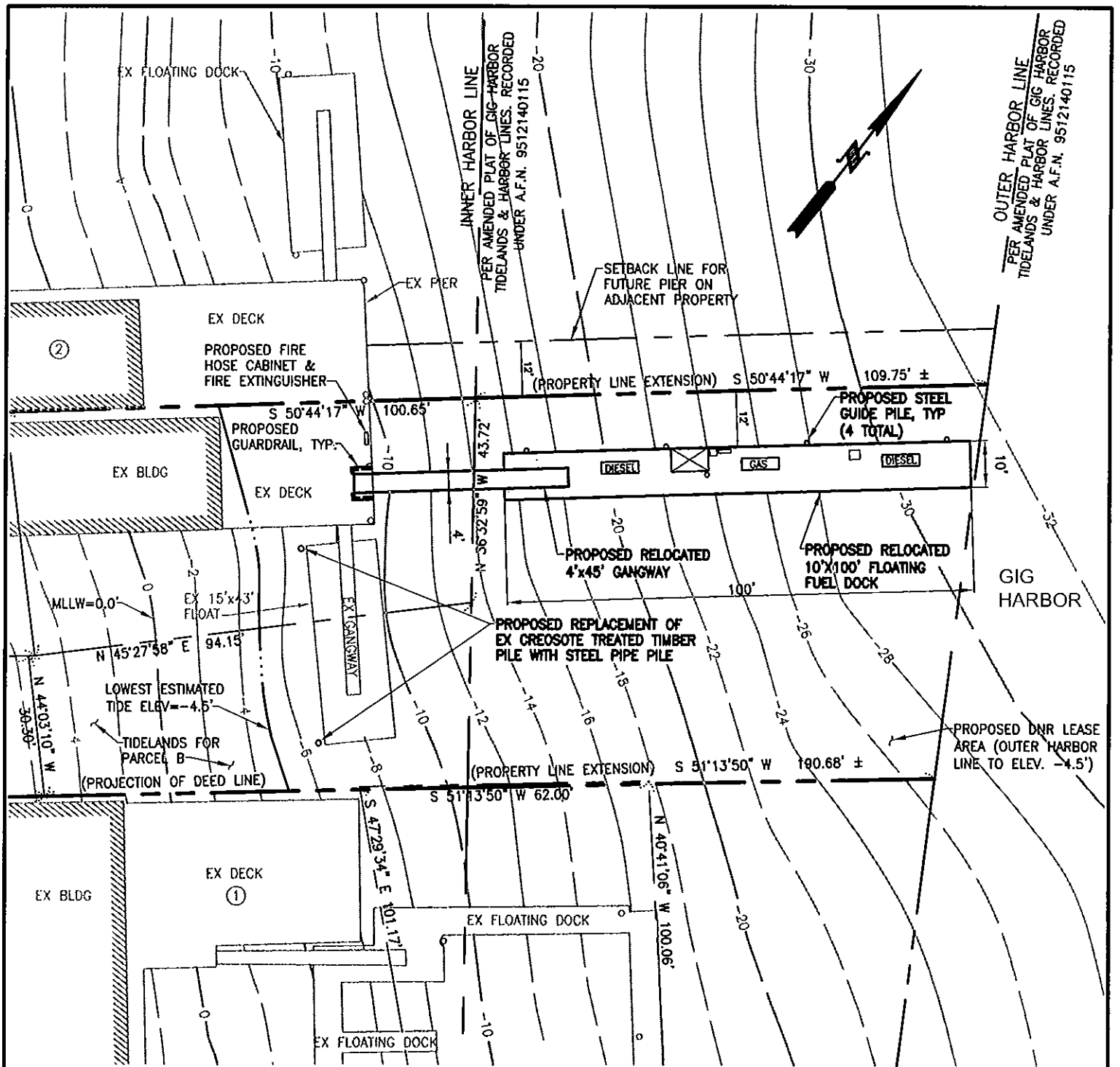

(200400186)
CO-APPLICANT NO.1
BABICH PROPERTY
SITE PLAN VIEW

10' 30'
0' 20'

200400186
AND
200400187

PROPOSED MARINE FUEL FACILITY
RELOCATION AND MOORAGE
RECONFIGURATION
IN: GIG HARBOR
AT: GIG HARBOR
COUNTY: PIERCE
STATE: WASHINGTON
APPL. BY: RANDALL BABICH &
GIG HARBOR MARINA INC.
SHEET: 4 OF 11 DATE: 12/12/2003
REV: 02/13/2004, 07/26/04

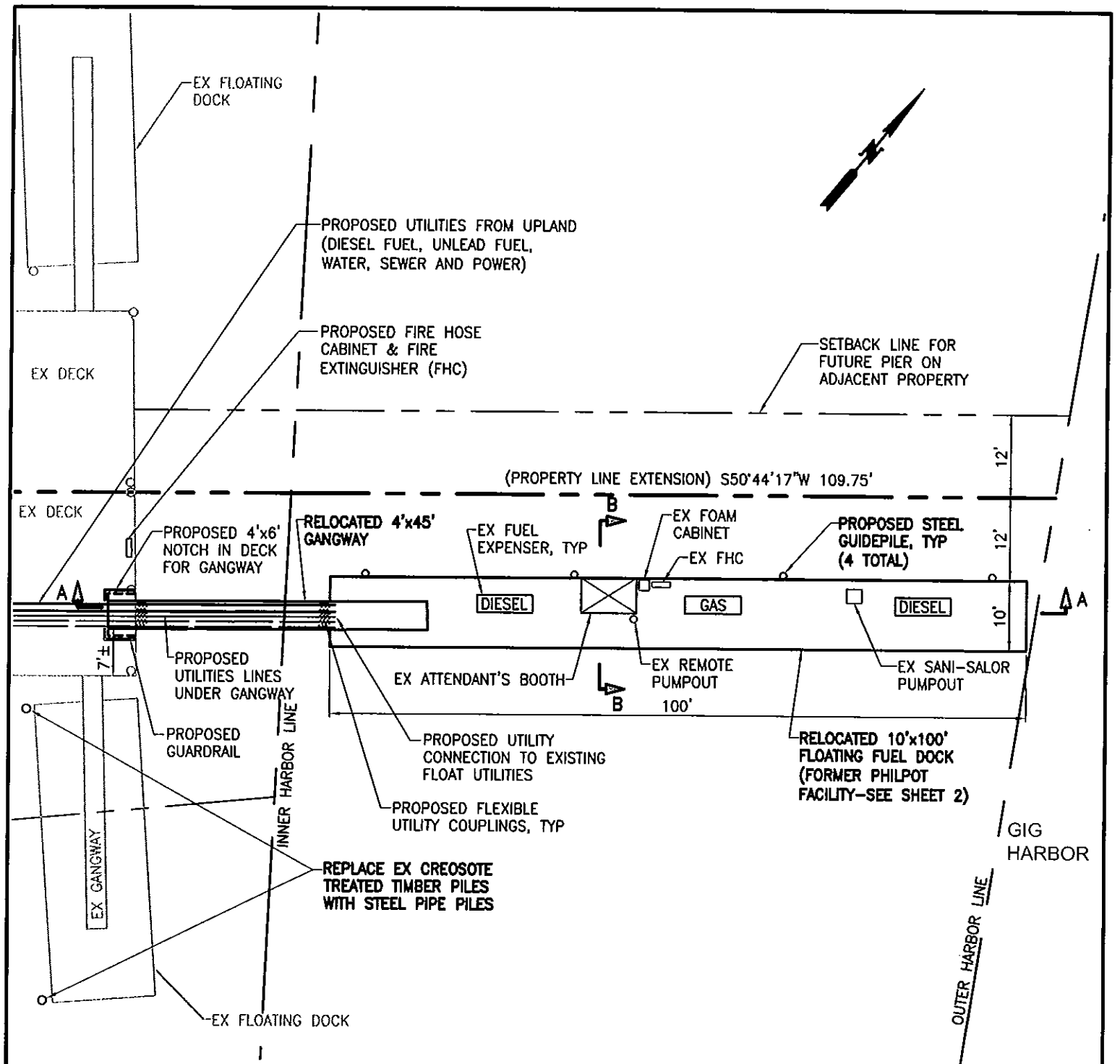

(200400186)
CO-APPLICANT NO.1
BABICH PROPERTY
DETAIL PLAN VIEW

5' 15'
0' 10' 20'

200400186
AND
200400187

PROPOSED MARINE FUEL FACILITY
RELOCATION AND MOORAGE
RECONFIGURATION
IN: GIG HARBOR
AT: GIG HARBOR
COUNTY: PIERCE
STATE: WASHINGTON
APPL. BY: RANDALL BABICH &
GIG HARBOR MARINA INC.
SHEET: 5 OF 11 DATE: 12/12/2003
REV: 02/13/2004, 07/26/04

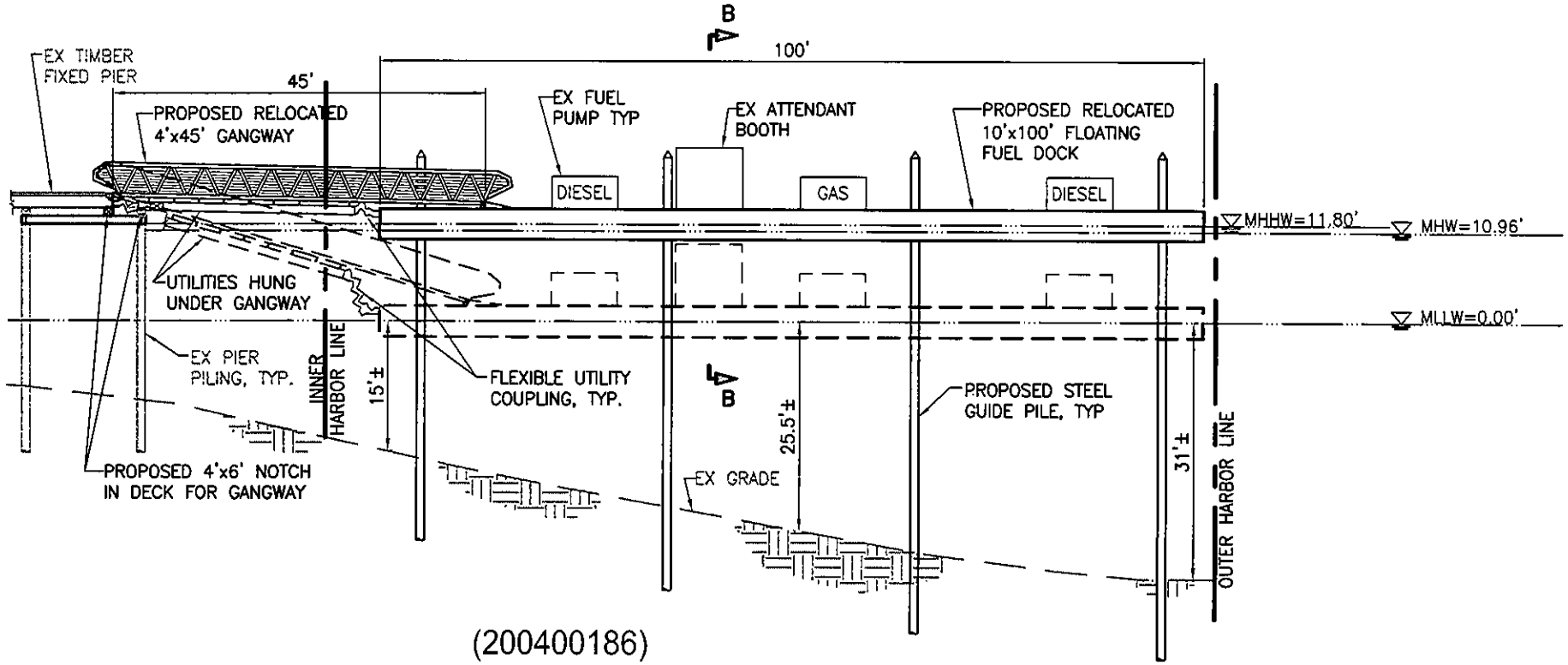

(200400186)

SECTION A-A: RELOCATED FUEL FLOAT

(BABICH PROPERTY)

5' 15'
0' 10' 20'

(NOTE: EX TIMBER VAPOR BARRIER ON NORTH SIDE NOT SHOWN IN SECTION A-A, SEE SECTION B-B)

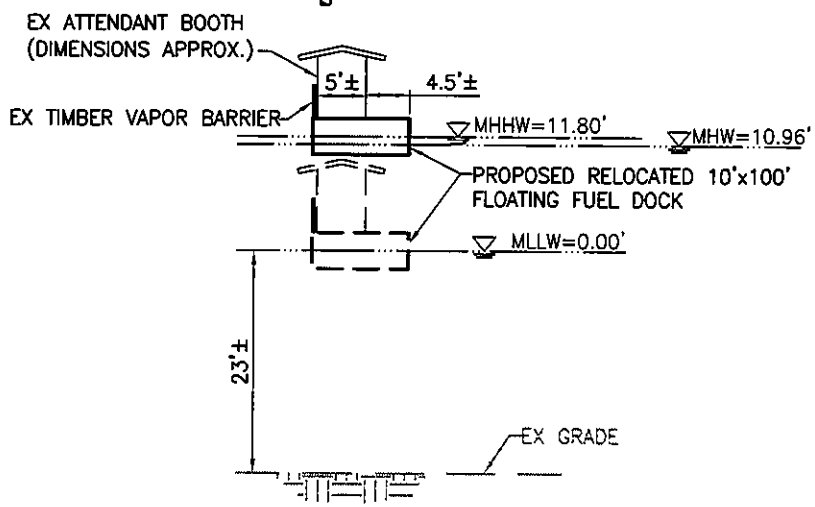

(200400186)

SECTION B-B: RELOCATED FUEL FLOAT

(BABICH PROPERTY)

5' 15'
0' 10' 20'

200400186
AND
200400187

PROPOSED MARINE FUEL FACILITY
RELOCATION AND MOORAGE
RECONFIGURATION
IN: GIG HARBOR
AT: GIG HARBOR
COUNTY: PIERCE
STATE: WASHINGTON
APPL. BY: RANDALL BABICH & GIG HARBOR MARINA INC.
SHEET: 6 OF 11 DATE: 12/12/2003
REV: 02/13/2004, 07/06/04

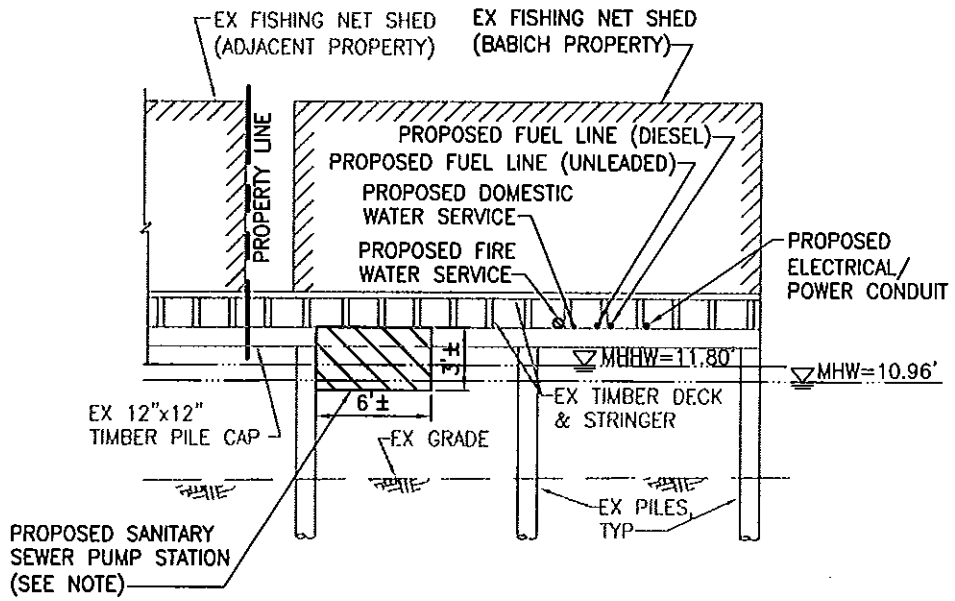

(200400186)

SECTION C-C: UTILITIES UNDER PIER

(BABICH PROPERTY)

5'

0' 10'

NOTE: PROPOSED SANITARY SEWER PUMP STATION SHALL BE SECURED TO EXISTING PILE, PILE CAP &/OR STRINGERS.

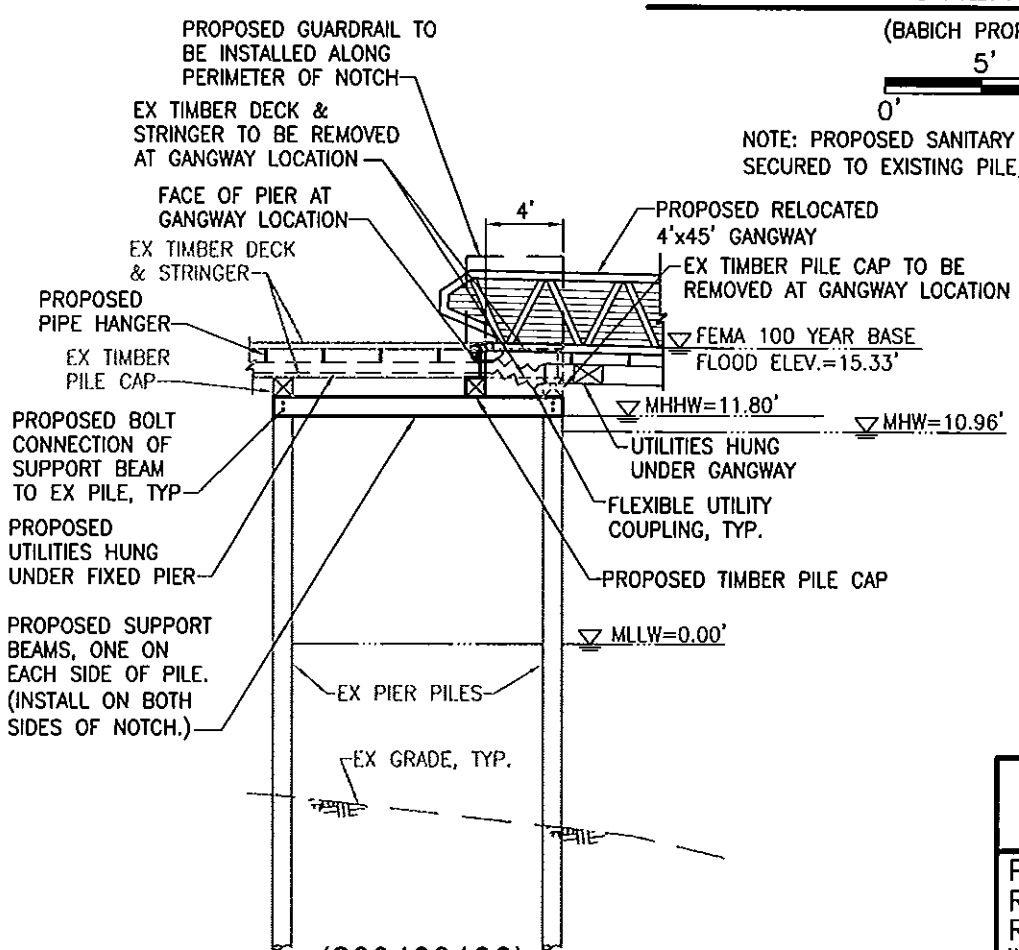

(200400186)

PROPOSED NOTCH IN EX DECK FOR GANGWAY

(BABICH PROPERTY)

5'

0' 10'

200400186
AND
200400187

PROPOSED MARINE FUEL FACILITY RELOCATION AND MOORAGE RECONFIGURATION
IN: GIG HARBOR
AT: GIG HARBOR
COUNTY: PIERCE
STATE: WASHINGTON
APPL. BY: RANDALL BABICH & GIG HARBOR MARINA INC.
SHEET: 7 OF 11 DATE: 12/12/2003
REV: 02/13/2004, 07/06/04

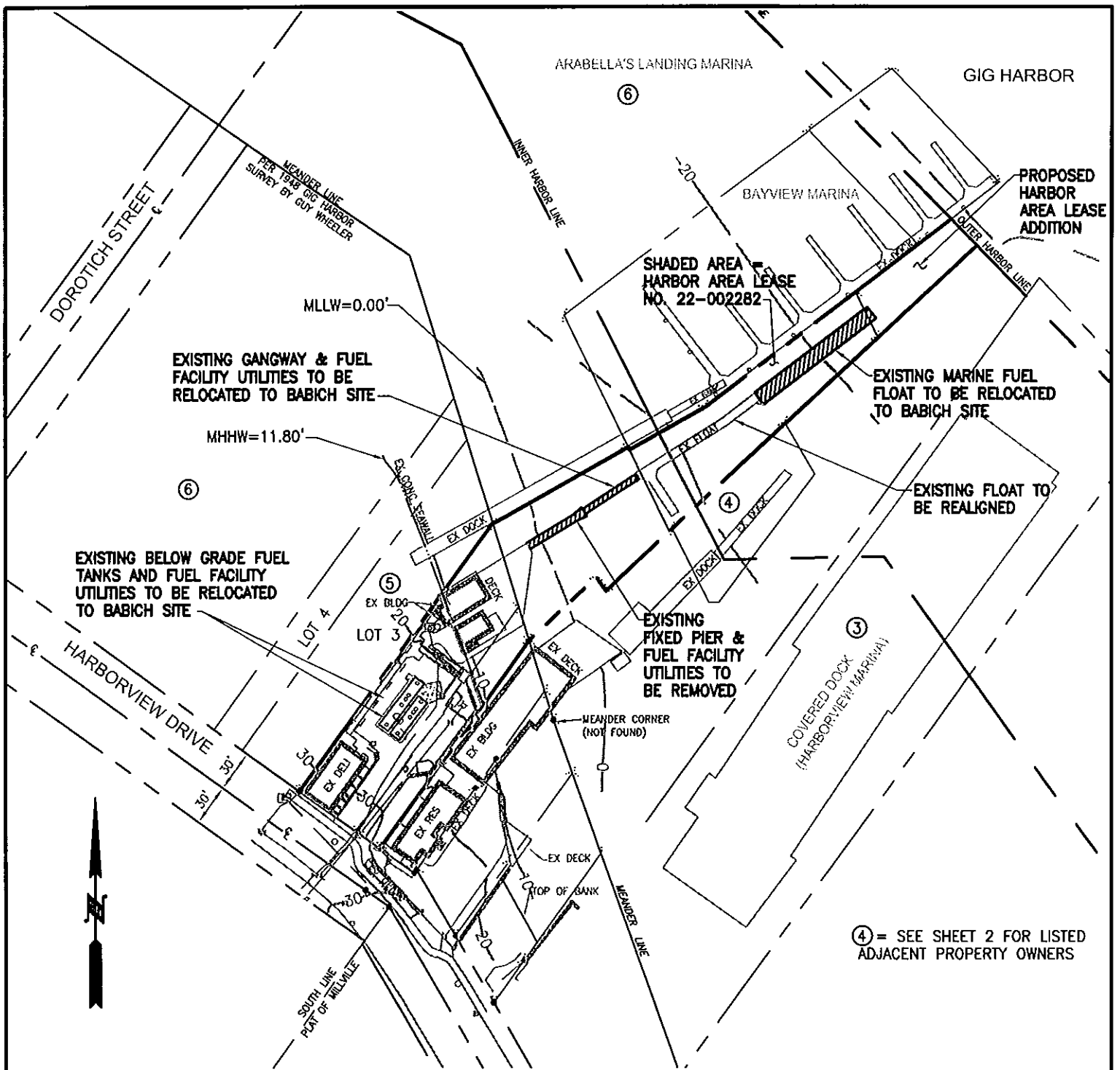

(200400187)
CO-APPLICANT NO. 2
ARABELLA'S SOUTH DOCK
GENERAL SITE PLAN

25' 75'
0' 50' 100'

200400186
AND
200400187

PROPOSED MARINE FUEL FACILITY RELOCATION AND MOORAGE RECONFIGURATION
IN: GIG HARBOR
AT: GIG HARBOR
COUNTY: PIERCE
STATE: WASHINGTON
APPL. BY: RANDALL BABICH & GIG HARBOR MARINA INC.
SHEET: 8 OF 11 DATE: 12/12/2003
REV: 02/13/2004, 07/26/04

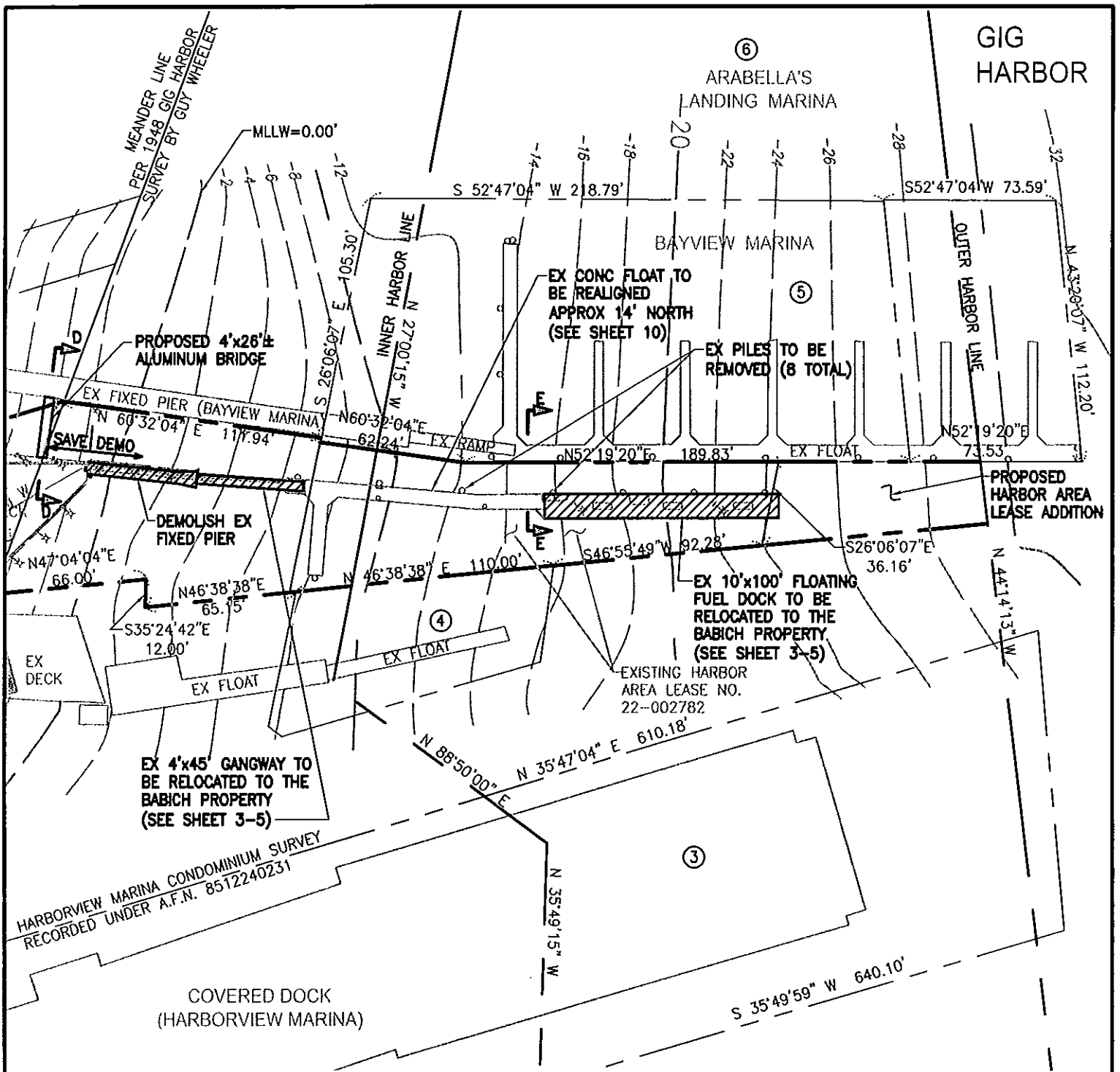

(200400187)
CO-APPLICANT NO. 2
ARABELLA'S SOUTH DOCK
SITE PLAN

0' 20' 40' 60'

200400186
AND
200400187

PROPOSED MARINE FUEL FACILITY RELOCATION AND MOORAGE RECONFIGURATION
IN: GIG HARBOR
AT: GIG HARBOR
COUNTY: PIERCE
STATE: WASHINGTON
APPL. BY: RANDALL BABICH & GIG HARBOR MARINA INC.
SHEET: 9 OF 11 DATE: 12/12/2003
REV: 02/13/2004, 07/26/04

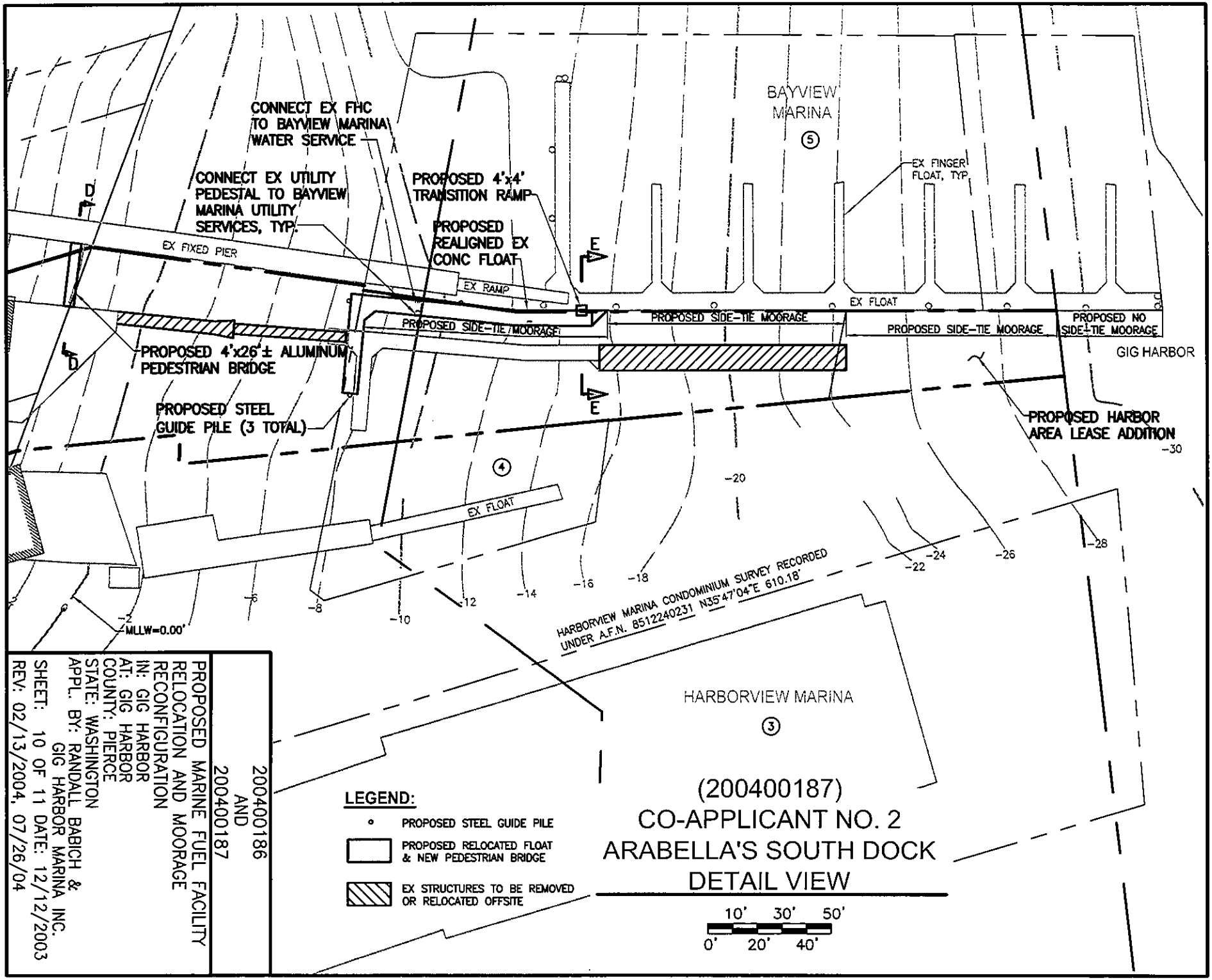
CONNECT EX FHC TO BAYVIEW MARINA WATER SERVICE
CONNECT EX UTILITY PEDESTAL TO BAYVIEW MARINA UTILITY SERVICES, TYP.
PROPOSED 4'x4' TRANSITION RAMP
PROPOSED REALIGNED EX CONC FLOAT
BAYVIEW MARINA
5
EX FINGER FLOAT, TYP.
EX FIXED PIER
EX RAMP
EX FLOAT
PROPOSED SIDE-TIE MOORAGE
PROPOSED SIDE-TIE MOORAGE
PROPOSED SIDE-TIE MOORAGE
PROPOSED NO SIDE-TIE MOORAGE
GIG HARBOR
PROPOSED 4'x26'± ALUMINUM PEDESTRIAN BRIDGE
PROPOSED STEEL GUIDE PILE (3 TOTAL)
PROPOSED HARBOR AREA LEASE ADDITION
4
EX FLOAT
HARBORVIEW MARINA CONDOMINIUM SURVEY RECORDED UNDER A.F.N. 8512240231 N35°47'04"E 610.18'
HARBORVIEW MARINA
3
MLLW=0.00'
-2
-6
-8
-10
-12
-14
-16
-18
-20
-22
-24
-26
-28
-30
D
E
LEGEND:
PROPOSED STEEL GUIDE PILE
PROPOSED RELOCATED FLOAT & NEW PEDESTRIAN BRIDGE
EX STRUCTURES TO BE REMOVED OR RELOCATED OFFSITE
(200400187)
CO-APPLICANT NO. 2
ARABELLA'S SOUTH DOCK
DETAIL VIEW
10' 30' 50'
0' 20' 40'
200400186
AND
200400187
PROPOSED MARINE FUEL FACILITY
RELOCATION AND MOORAGE
RECONFIGURATION
IN: GIG HARBOR
AT: GIG HARBOR
COUNTY: PIERCE
STATE: WASHINGTON
APPL. BY: RANDALL BABICH & GIG HARBOR MARINA INC.
SHEET: 10 OF 11 DATE: 12/12/2003
REV: 02/13/2004, 07/26/04

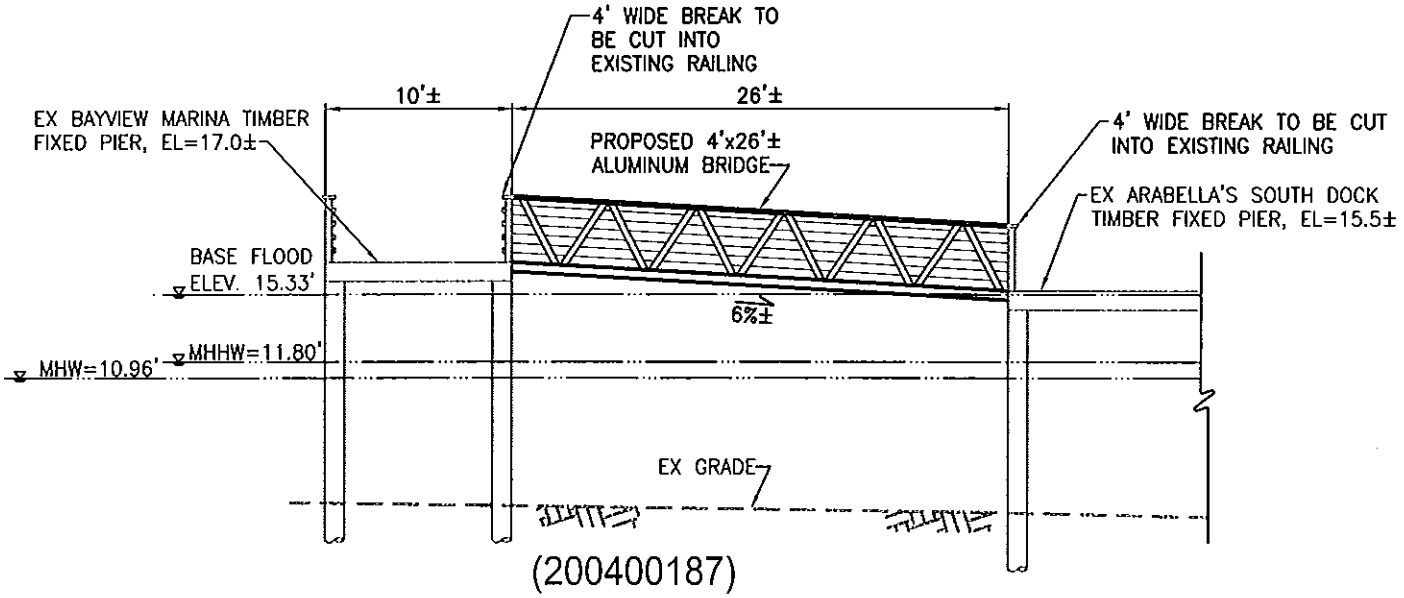

(200400187)

SECTION D-D: PROPOSED BRIDGE

(CO-APPLICANT NO. 2 – ARABELLA'S SOUTH DOCK PROPERTY)

5'
0' 10'

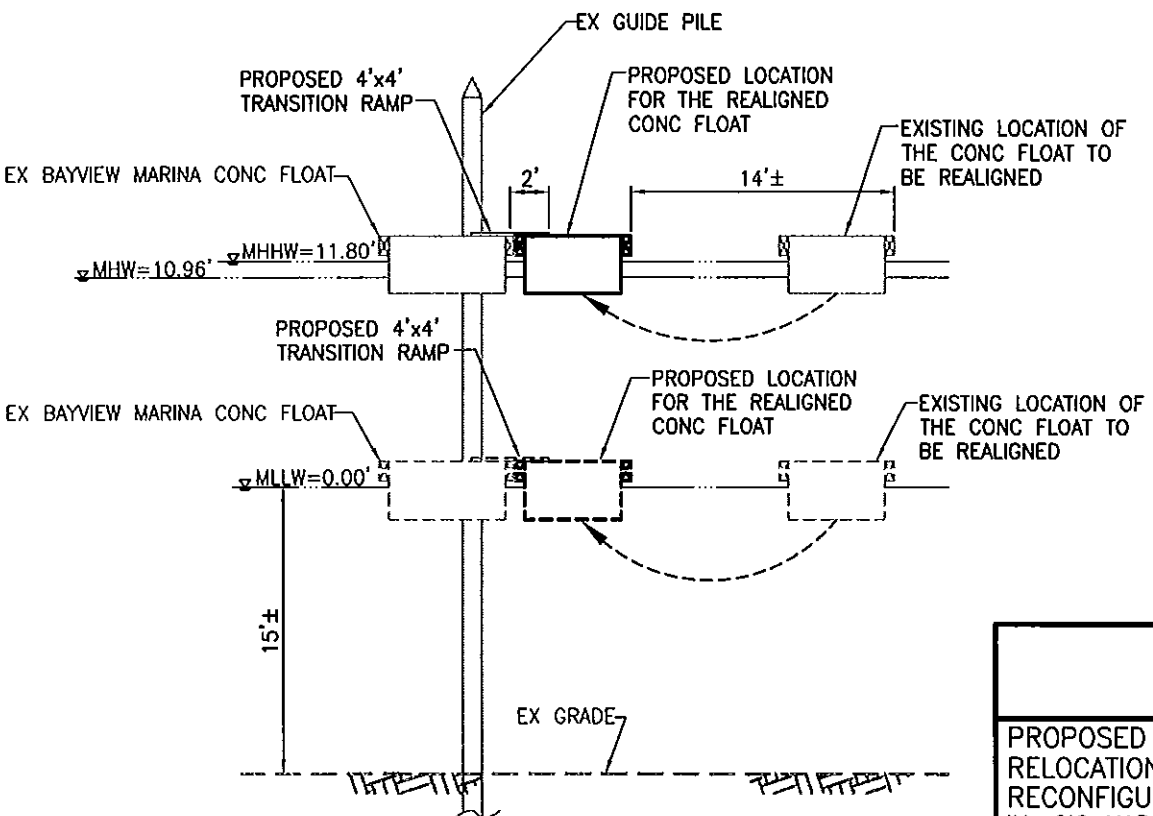

(200400187)

SECTION E-E: RELOCATED FLOAT

(CO-APPLICANT NO. 2 – ARABELLA'S SOUTH DOCK PROPERTY)

5'
0' 10'

200400186
AND
200400187

PROPOSED MARINE FUEL FACILITY RELOCATION AND MOORAGE RECONFIGURATION
IN: GIG HARBOR
AT: GIG HARBOR
COUNTY: PIERCE
STATE: WASHINGTON
APPL. BY: RANDALL BABICH & GIG HARBOR MARINA INC.
SHEET: 11 OF 11 DATE: 12/12/2003
REV: 02/13/2004, 07/06/04

STATE OF WASHINGTON
DEPARTMENT OF ECOLOGY
P.O. Box 47600 • Olympia, Washington 98504-7600
(360) 407-6000 • TDD Only (Hearing Impaired) (360) 407-6006

STATE OF WASHINGTON
DEPARTMENT OF ECOLOGY

Notice of Application for
Certification of Consistency with the
Washington Coastal Zone Management Program

Date: January 27, 2005

Notice is herby given that a request has been filed with the Department of Ecology, pursuant to the requirements of Section 307© of the federal Coastal Zone Management Act of 1972 (16 U.S.C. 1451), to certify that the project described in the U.S. Army Corps of Engineers Public Notice No. 200401176 will comply with the Washington State Coastal Zone Management Program and that the project will be conducted in a manner consistent with that Program.

Any person desiring to present views on the project pertaining to the project's compliance or consistency with the Washington State Coastal Zone Management Program may do so by providing written comments within 30 days of the above publication date to:

Federal Permit Coordinator
Department of Ecology
SEA Program
Post Office Box 47600
Olympia, Washington 98504-7600