US Army Corps
of Engineers
Seattle District

Public Notice of Application for Permit

Regulatory Branch
Post Office Box 3755
Seattle, Washington 98124-3755
Telephone (206) 764-3495
ATTN: Susan Powell, Project Manager

Public Notice Date: December 22, 2004
Expiration Date: January 22, 2005
Reference: 200401222
Name: Holmes Harbor Community Partners, LLC

Interested parties are hereby notified that an application has been received for a Department of the Army permit in accordance with Section 10 of the Rivers and Harbors Act of March 3, 1899, for certain work described below and shown on the enclosed drawings.

APPLICANT - Holmes Harbor Community Partners, LLC
15921 Northeast 8th Street
Bellevue, Washington 98008
ATTN: Mr. Mark Schuster
Telephone: (425) 562-0456

AGENT - Waterfront Construction
205 NE Northlake Way, Suite 230
Seattle, Washington 98105
ATTN: Mr. David Douglas
Telephone: (206) 548-9800

LOCATION – In Holmes Harbor near Freeland, Island County, Washington.

WORK – Construct a pier, and install a ramp and float.

PURPOSE – Provide moorage for customers of a restaurant, golf course, and proposed inn, and, for home owners in the Holmes Harbor Community Development and other property owners in the area on a space available, seasonal fee basis.

ADDITIONAL INFORMATION – Portions of a dilapidated pier and ramp, and associated piling currently exist at the site. Prior to construction of the new structure, remaining components of the former structure will be removed. Work outside of U.S. Army Corps of Engineers' (Corps) jurisdiction includes the construction of rock bulkheads landward of the existing north and south timber bulkheads, the repair of a portion of the bulkhead above the plane of mean high water, and the installation of anchored logs north of the bulkhead, landward of mean high water. The north and south timber bulkheads will be removed after construction of the rock bulkheads.

ENDANGERED SPECIES – The Endangered Species Act (ESA) of 1973, as amended, requires assessment of potential impacts to listed and proposed species. The bald eagle *(Haliaeetus leucocephalus)* threatened, Puget Sound chinook salmon *(Oncorhynchus tshawytscha)* threatened, Hood Canal summer chum *(Oncorhynchus keta)* threatened, coastal/Puget Sound bull trout *(Salvelinus confluentus)* threatened, marbled murrelet *(Brachyramphus marmoratus)* threatened, Steller sea lion *(Eumetopias jubatus)* threatened, humpback

whale *(Megaptera novaeangliae)* endangered, and leatherback sea turtle *(Dermochelys coriacea),* endangered in the state of Washington, occur in the proposed project area. For marbled murrelet, critical habitat has been designated. After receipt of comments from this public notice, the Corps will evaluate the potential impacts to the bald eagle, chinook salmon, bull trout, chum, marbled murrelet, Steller sea lion, humpback whale, and leatherback sea turtle.

ESSENTIAL FISH HABITAT – The Magnuson-Stevens Fishery Conservation and Management Act (MSA), as amended by the Sustainable Fisheries Act of 1996, requires all Federal agencies to consult with the National Marine Fisheries Service (NMFS) on all actions, or proposed actions, permitted, funded, or undertaken by the agency, that may adversely affect Essential Fish Habitat (EFH). EFH for Pacific salmon, groundfish, and coastal pelagic Species occurs in the project area. The proposed action would impact approximately 0.2 acres of EFH for these species.

If the Corps determines that the proposed action may adversely affect EFH for federally-managed fisheries in Washington waters, the Corps will initiate EFH consultation with the NMFS. The Corps' final determination relative to project impacts and the need for mitigation measures is subject to review by and coordination with the NMFS.

CULTURAL RESOURCES – The District Engineer has reviewed the latest published version of the National Register of Historic Places, lists of properties determined eligible and other sources of information. The following is current knowledge of the presence or absence of historic properties and the effects of the undertaking upon these properties:

There are no recorded historic properties within the permit area.

The District Engineer invites responses to this public notice from Native American Nations or tribal governments, Federal, State, and local agencies, historical and archeological societies, and other parties likely to have knowledge of or concerns with historic properties in the area.

PUBLIC HEARING – Any person may request, in writing, within the comment period specified in this notice, that a public hearing be held to consider this application. Requests for public hearings shall state, with particularity, the reasons for holding a public hearing.

EVALUATION – The decision whether to issue a permit will be based on an evaluation of the probable impact, including cumulative impacts of the proposed activity on the public interest. That decision will reflect the national concern for both protection and utilization of important resources. The benefits which reasonably may be expected to accrue from the proposal must be balanced against its reasonably foreseeable detriments. All factors which may be relevant to the proposal will be considered, including the cumulative effects thereof; among those are conservation, economics, aesthetics, general environmental concerns, wetlands, historic properties, fish and wildlife values, flood hazards, floodplain values, land use, navigation, shoreline erosion and accretion, recreation, water supply and conservation, water quality, energy needs, safety, food and fiber production, mineral needs, considerations of property ownership, and, in general, the needs and welfare of the people.

The Corps is soliciting comments from the public; Federal, Native American Nations or tribal governments, State, and local agencies and officials; and other interested parties in order to consider and evaluate the impacts of this activity. Any comments received will be considered by the Corps to determine whether to issue, modify, condition or deny a permit for the work. To make this decision, comments are used to assess impacts on endangered species, historic properties, water quality, general environmental effects, and the other public interest factors listed above. Comments are used in the preparation of an Environmental Assessment and/or an Environmental Impact Statement pursuant to the National Environmental Policy Act. Comments are

also used to determine the need for a public hearing and to determine the overall public interest of the activity.

ADDITIONAL EVALUATION – The State of Washington is reviewing this work for consistency with the approved Washington Coastal Zone Management Program.

This proposal is the subject of Shorelines Substantial Development Permit No. SDP-LAA 35904, being processed by Island County.

COMMENT AND REVIEW PERIOD – Conventional mail or e-mail comments on this public notice will be accepted and made part of the record and will be considered in determining whether it would be in the public interest to authorize this proposal. In order to be accepted, e-mail comments must originate from the author's e-mail account and must include on the subject line of the e-mail message the permit applicant's name and reference number as shown below. All e-mail comments should be sent to Susan.M.Powell@usace.army.mil. Conventional mail comments should be sent to U.S. Army Corps of Engineers, Regulatory Branch, Post Office Box 3755, Seattle, Washington, 98124-3755. Both conventional mail or e-mail comments must include the permit applicant's name and reference number, as shown below, and the commentor's name, address, and phone number. All comments whether conventional mail or e-mail must reach this office, no later than the expiration date of this public notice to ensure consideration. Please include the following name and reference number:

Holmes Harbor Community Partners, LLC
200401222

Encl
Drawings (14)

STATE OF WASHINGTON
DEPARTMENT OF ECOLOGY
P.O. Box 47600 • Olympia, Washington 98504-7600
(360) 407-6000 • TDD Only (Hearing Impaired) (360) 407-6006

STATE OF WASHINGTON
DEPARTMENT OF ECOLOGY

Notice of Application for
Certification of Consistency with the
Washington Coastal Zone Management Program

Date: December 22, 2004

Notice is herby given that a request has been filed with the Department of Ecology, pursuant to the requirements of Section 307© of the federal Coastal Zone Management Act of 1972 (16 U.S.C. 1451), to certify that the project described in the U.S. Army Corps of Engineers Public Notice No. 200401222 will comply with the Washington State Coastal Zone Management Program and that the project will be conducted in a manner consistent with that Program.

Any person desiring to present views on the project pertaining to the project's compliance or consistency with the Washington State Coastal Zone Management Program may do so by providing written comments within 30 days of the above publication date to:

Federal Permit Coordinator
Department of Ecology
SEA Program
Post Office Box 47600
Olympia, Washington 98504-7600

2004 01222

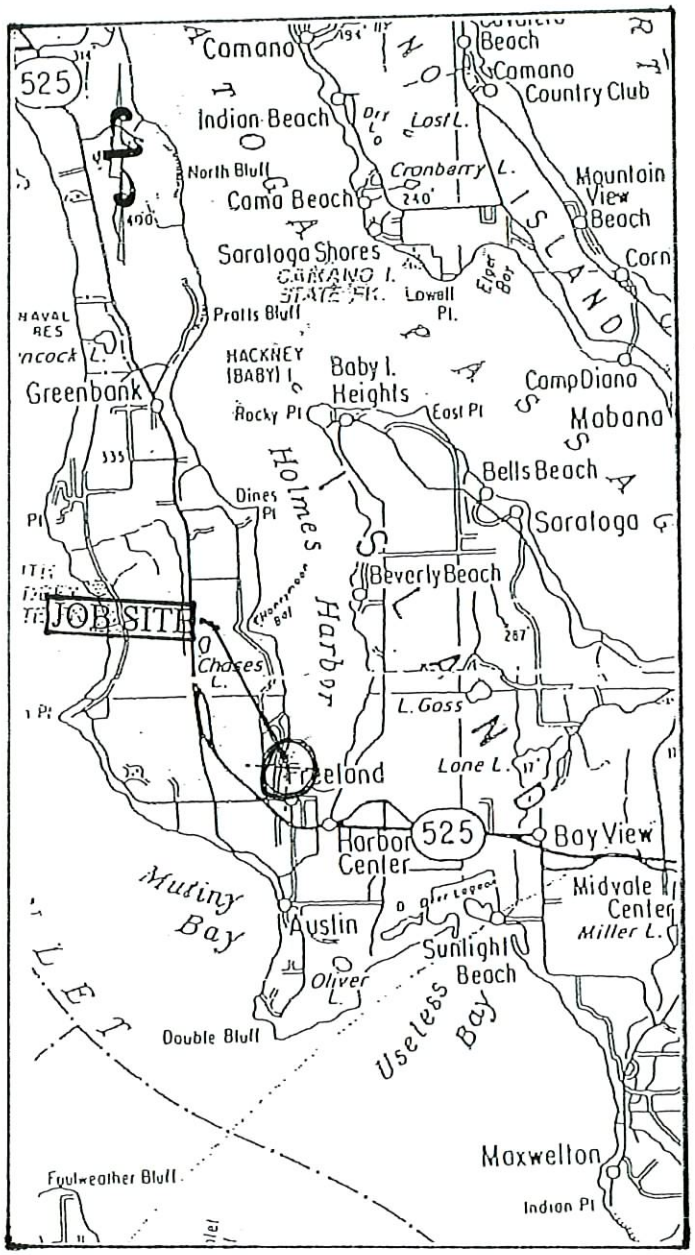

VICINITY MAP/NO SCALE

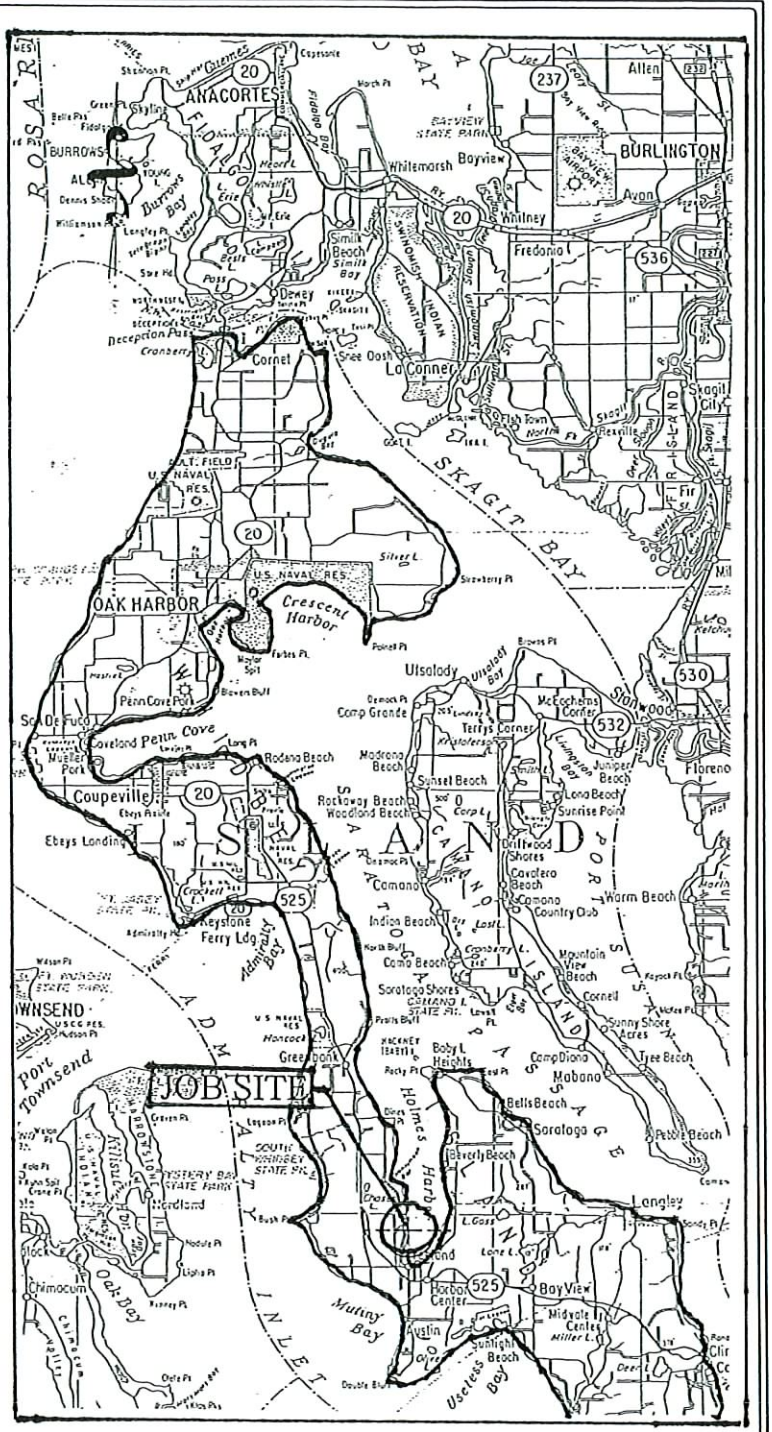

AREA MAP/NO SCALE

1/4 SEC: NW3-29N-02E
PARCEL#: R22903-205-4500
LAT: 48°-01'-05"
LONG: 122°-32'-10"

PROJECT DESIGNED BY:
Waterfront Construction Inc.
205 NE NORTHLAKE WAY, Suite 230
SEATTLE, WA. 98105 (206) 548-9800

2004 01222

ADJACENT OWNERS: ① BAR D INVESTMENTS LLC 5021 RALPH RD FREELAND, WA. 98249 ② GARY R SWANSON 1399 SCENIC HEIGHTS RD FREELAND, WA. 98249	PROPOSED: RE-ESTABLISH FIXED PIER, RAMP, AND FLOAT PIER. REPAIR/REPLACE BULKHEAD. REPAIR ACCESS PATH, AND PROVIDE TOE PROTECTION.	APPLICANT: HOLMES HARBOR COMMUNITY PARTNERS, LLC
	PURPOSE: PROVIDE COMMUNITY MOORAGE AND PROVIDE EROSION PROTECTION.	SITE ADD. 5023 HARBOR HILLS DRIVE FREELAND, WA. 98249-9798
		MAIL ADD. 15921 NE 8TH ST, SUITE 200 BELLEVUE, WA. 98008
		DATUM: M.H.W.= 10.59'
APPLICATION#:	DWG#: 03-3250-A.1-1	SHEET: 1 OF: 14 DATE: 9-8-04

Rev - 9-20-04

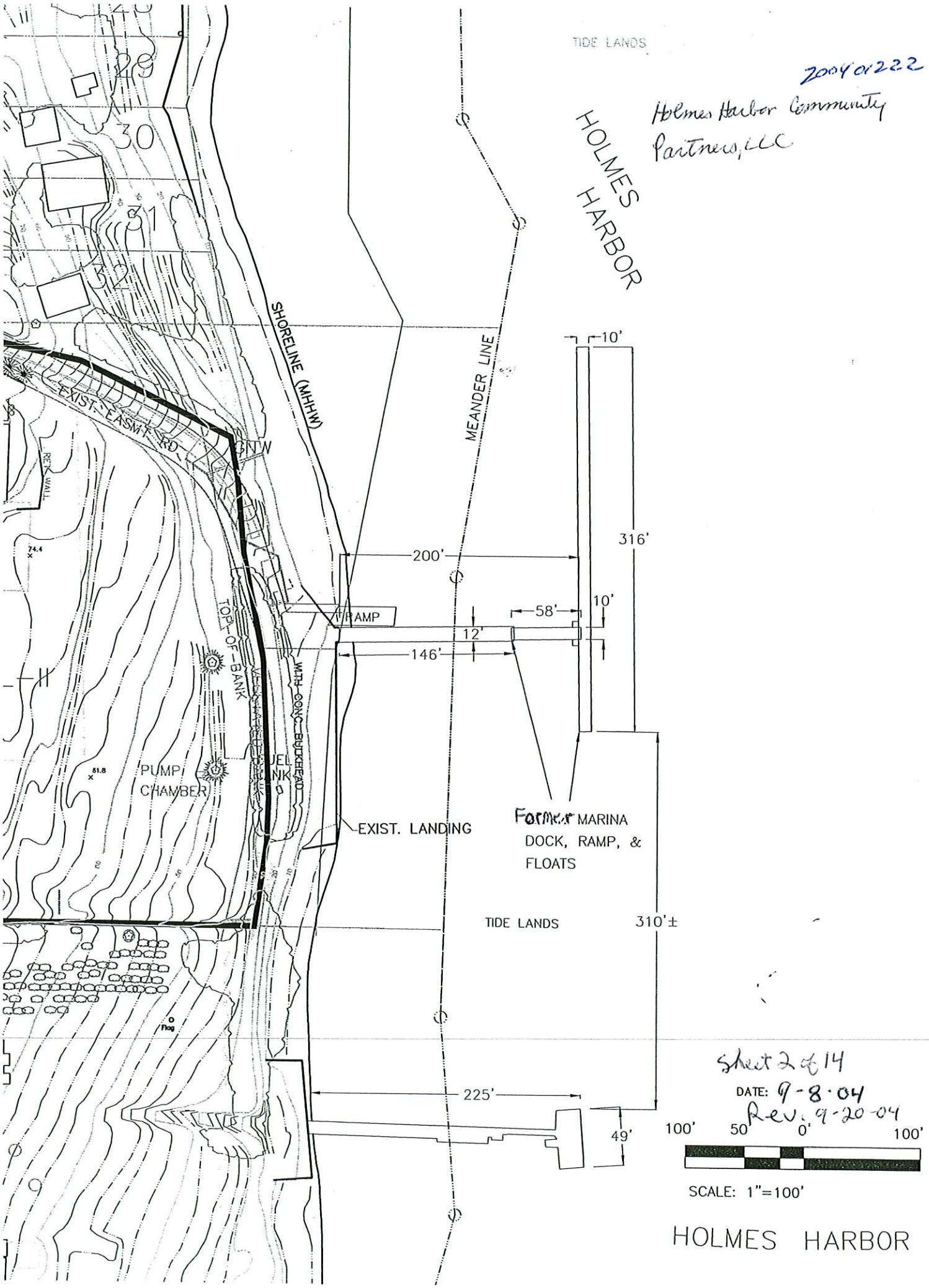
TIDE LANDS
2004 01222
Holmes Harbor Community Partners, LLC
HOLMES HARBOR
SHORELINE (MHHW)
MEANDER LINE
EXIST. EASMT. RD.
GNW
RET. WALL
74.4
10'
316'
200'
RAMP
58'
10'
12'
146'
TOP-OF-BANK
WITH CONC. BULKHEAD
PUMP CHAMBER
51.8
EXIST. LANDING
Former MARINA DOCK, RAMP, & FLOATS
TIDE LANDS
310'±
Flag
225'
49'
Sheet 2 of 14
DATE: 9-8-04
Rev. 9-20-04
100' 50 0' 100'
SCALE: 1"=100'
HOLMES HARBOR

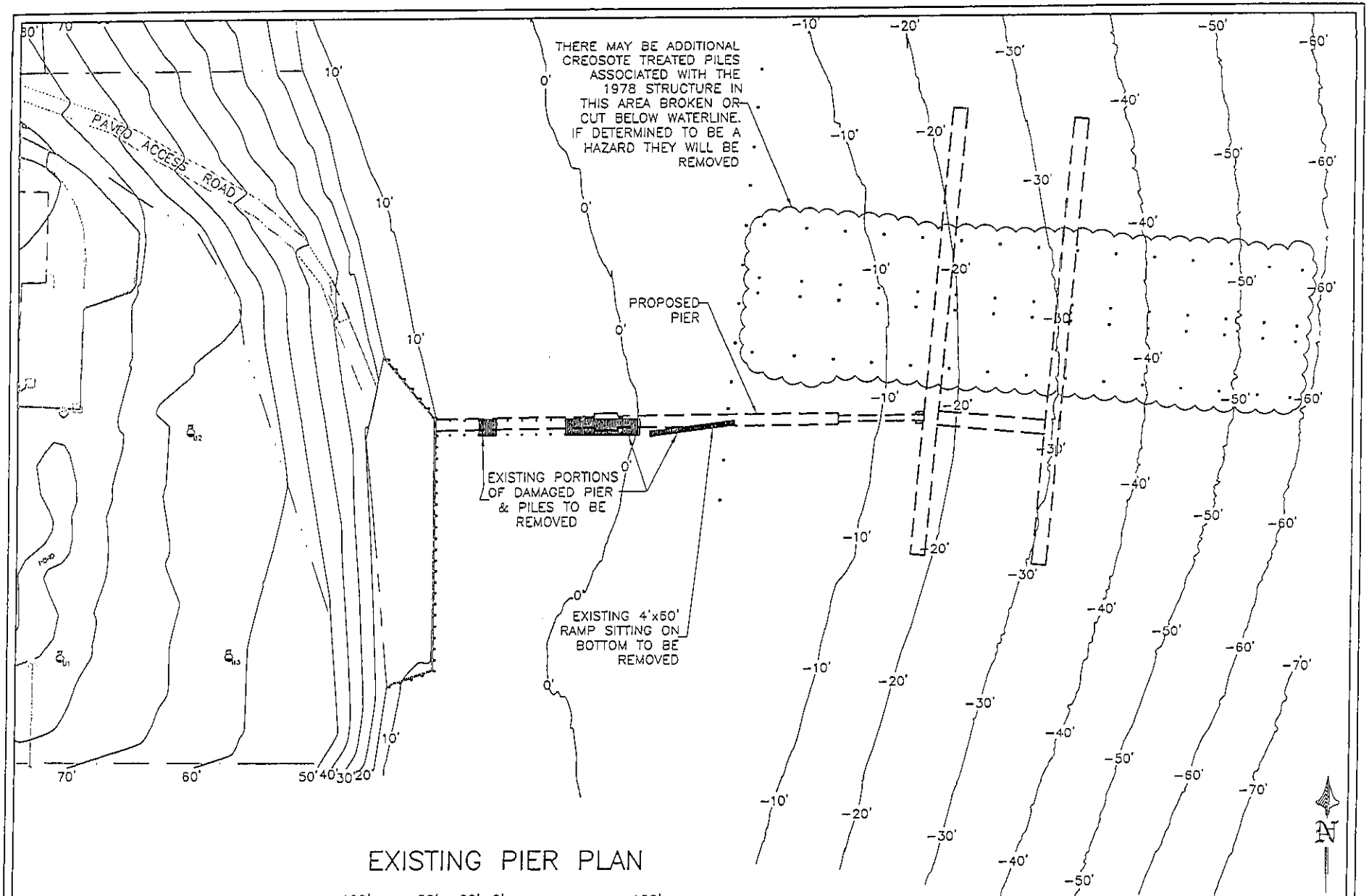

EXISTING PIER PLAN

100' 50' 20' 0' 100'

SCALE: 1"=100'

EXISTING CONDITIONS:
THERE ARE ONLY TWO SECTIONS OF THE PIER REMAINING WITH ALL 28 CREOSOTE TREATED PILES. THE GANGWAY RAMP HAS DROPPED INTO THE TIDELANDS BELOW. THE OLD FLOATS HAVE BEEN REMOVED BUT 24 OF THE PILES ARE STILL VISIBLE. THERE MAY BE ADDITIONAL PILES FROM THE ORIGINAL MOORAGE STRUCTURE THAT HAVE BEEN CUT OR BROKEN OFF BELOW THE WATERLINE. THE EXISTING BULKHEAD HAS VERTICAL CREOSOTE PILES WITH HORIZONTAL CREOSOTE TREATED TIMBERS. A PORTION OF THE SOUTH END OF THE BULKHEAD HAS BEEN DAMAGED. THE TOE OF SLOPE ADJACENT TO THE ACCESS ROAD HAS SLOUGHED AND DAMAGED THE ACCESS ROAD.

PROPOSED: RE-ESTABLISH FIXED PIER, RAMP, AND FLOAT PIER. REPAIR/REPLACE BULKHEAD.	
IN: HOLMES HARBOR, WHIDBEY ISLAND	
AT: FREELAND	REVISED:
APPLICANT: HOLMES HARBOR COMMUNITY PARTNERS, LLC 5023 HARBOR HILLS DRIVE FREELAND, WA. 98249-9798	
SHEET: 3 OF: 14	
DATE: 9-8-04	DWG#: 03-3250-A.7-1

Rev 9-20-04 20040122L

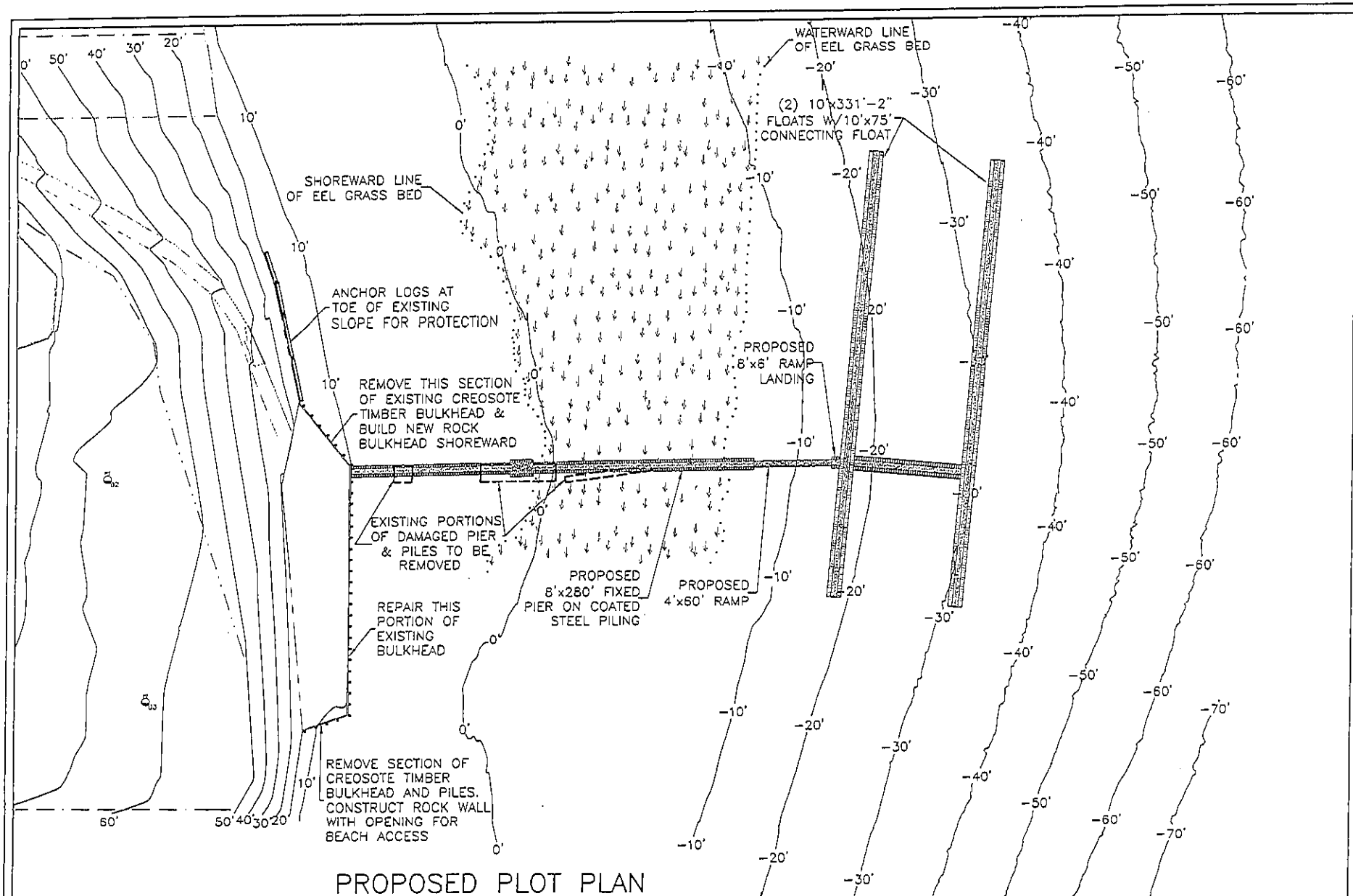

PROPOSED PLOT PLAN

100' 50' 20' 0' 100'

SCALE: 1"=100'

PROPOSAL IS TO REMOVE THE REMAINING (2) SECTIONS OF THE OLD PIER STRUCTURE. REMOVE ALL OF THE PIER & FLOAT PILES REMOVE 2 DAMAGED SECTIONS OF THE EXISTING BULKHEAD. CONSTRUCT NEW ROCK BULKHEAD IN THE AREA OF THE REMOVED SECTIONS. ONE BULKHEAD SECTION WILL HAVE AN ACCESS TO BEACH AND TIDELANDS. CONSTRUCT A NEW FIXED PILE PIER 8'x280' WITH A 12'x16' VIEWING PLATFORM 110' FROM SHORE. CONNECT A NEW 4'x60' RAMP DOWN TO (2) 10'x331'-2" FLOATS WITH A 10'x75' CONNECTING FLOAT.

PROPOSED: RE-ESTABLISH FIXED PIER, RAMP, AND FLOAT PIER. REPAIR/REPLACE BULKHEAD.	
IN: HOLMES HARBOR, WHIDBEY ISLAND	
AT: FREELAND	REVISED:
APPLICANT: HOLMES HARBOR COMMUNITY PARTNERS, LLC 5023 HARBOR HILLS DRIVE FREELAND, WA. 98249-9798	
SHEET: 4 OF: 14	
DATE: 9-8-04	DWG#: 03-3250-A.8-1

Rev. 9-20-04 20040222

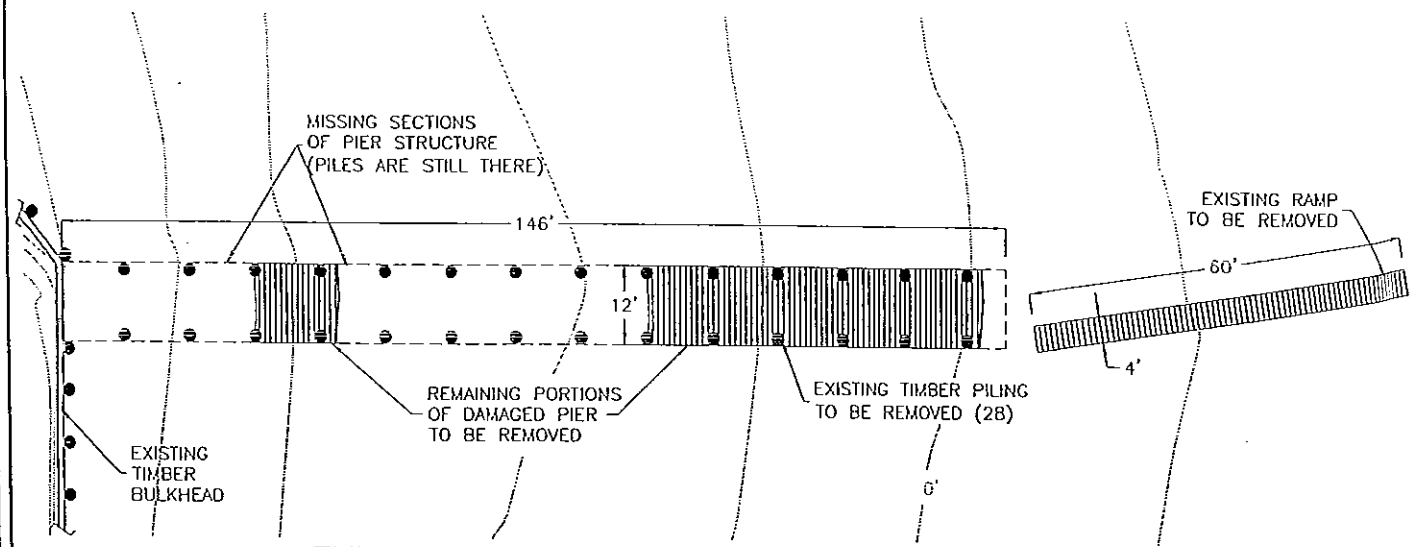

EXISTING PIER DETAIL VIEW

SCALE: 1"=30'

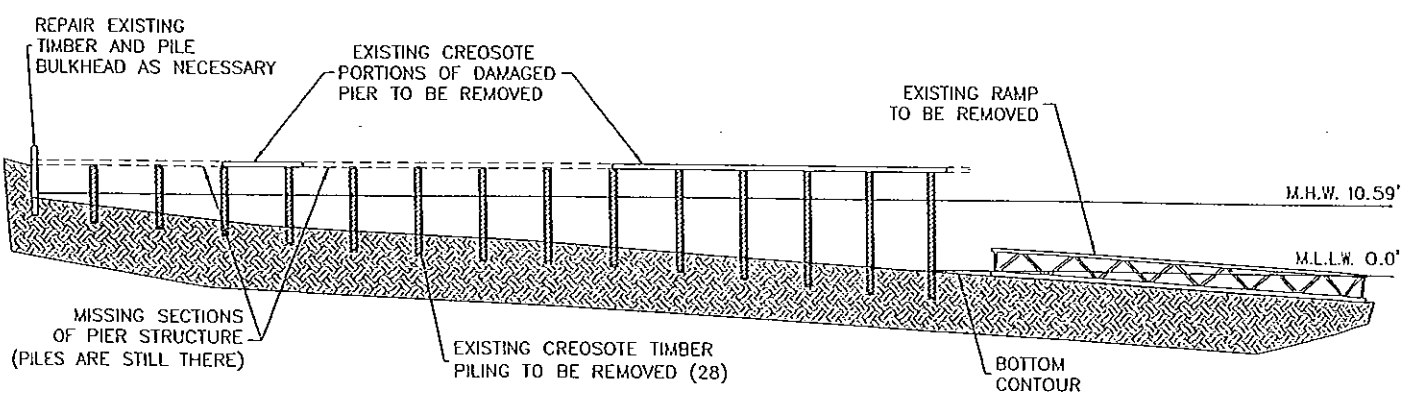

EXISTING PIER ELEVATION VIEW

30' 15' 0' 30'

SCALE: 1"=30'

PROPOSED PROJECT INCLUDES REMOVING
REMAINING PIER SECTIONS, PILES, AND RAMP.

PROPOSED: RE-ESTABLISH FIXED PIER, RAMP, AND FLOAT PIER. REPAIR/REPLACE BULKHEAD.	
IN: HOLMES HARBOR, WHIDBEY ISLAND	
AT: FREELAND	REVISED:
APPLICANT: HOLMES HARBOR COMMUNITY PARTNERS, LLC 5023 HARBOR HILLS DRIVE FREELAND WA. 98249-9798	
SHEET: 5 OF: 14	
DATE: 9-8-04	DWG#: 03-3250-A.10-1

Rev: 9-20-04 2004 01222

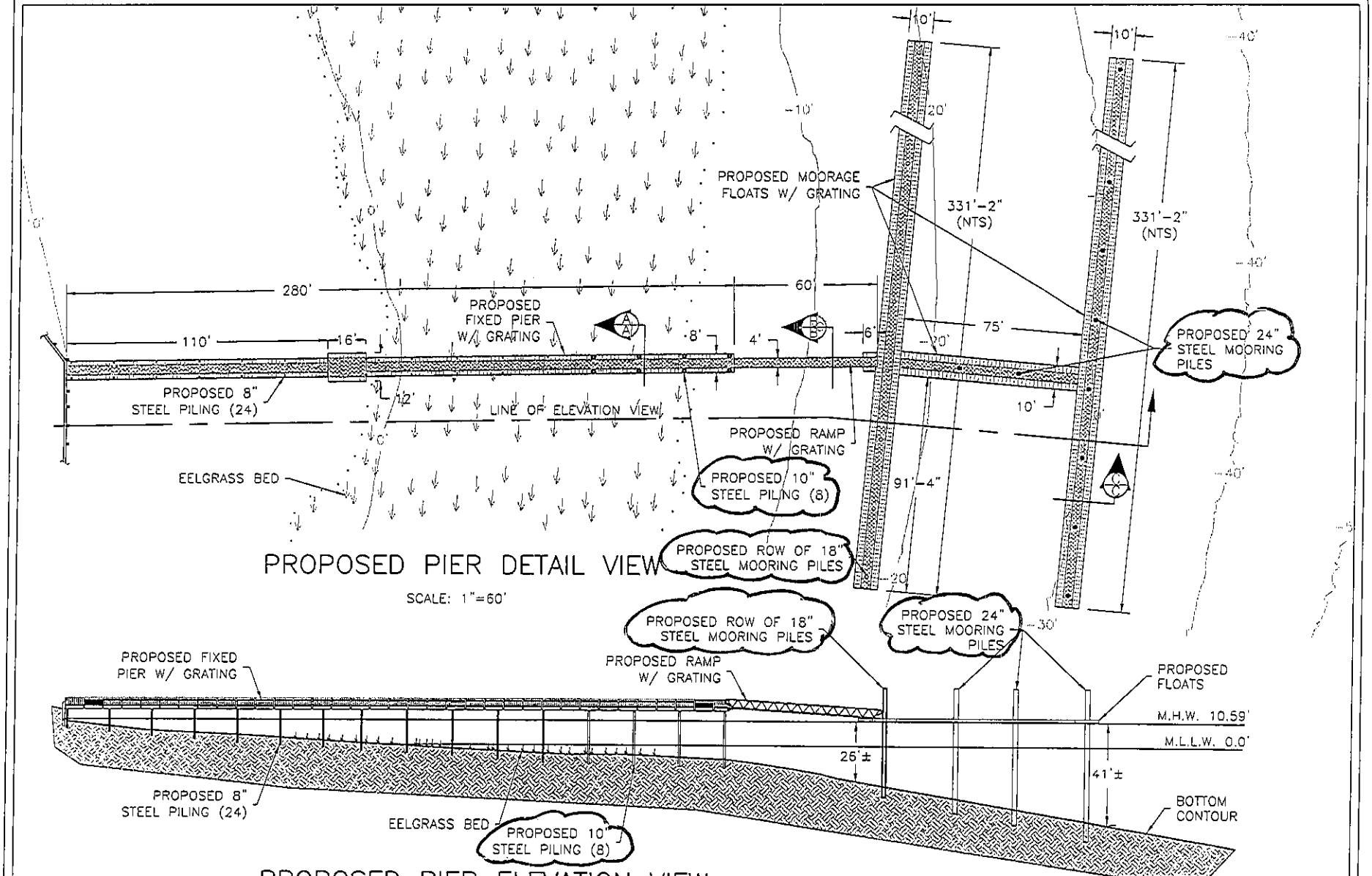

PROPOSED PIER DETAIL VIEW

SCALE: 1"=60'

PROPOSED PIER ELEVATION VIEW

60' 45' 30' 15' 0' 60'

SCALE: 1"=60'

REVISED
9-20-2004

DRIVE (32) NEW 8"ø AND 10"ø COATED STEEL PILES AND CONSTRUCT NEW FIXED PILE PIER 8'x280' WITH A 16'x12' VIEWING PLATFORM. CONNECT A 4'x60' RAMP DOWN TO A 6'x8' LANDING FLOAT. THE LANDING FLOAT WILL ATTACH TO (2) 10'x331'-2" MOORAGE FLOATS WITH A 10'x75' CONNECTING FLOAT BETWEEN THEM. FLOATS TO BE SECURED BY (28) STEEL PILES.

PROPOSED: RE-ESTABLISH FIXED PIER, RAMP, AND FLOAT PIER. REPAIR/REPLACE BULKHEAD.	
IN: HOLMES HARBOR, WHIDBEY ISLAND	
AT: FREELAND	APPLICATION#:
APPLICANT: HOLMES HARBOR COMMUNITY PARTNERS, LLC 5023 HARBOR HILLS DRIVE FREELAND, WA. 98249-9798	
SHEET: 6 OF: 14	
DATE: 9-8-04	DWG#: 03-3250-A.11-1

20040122

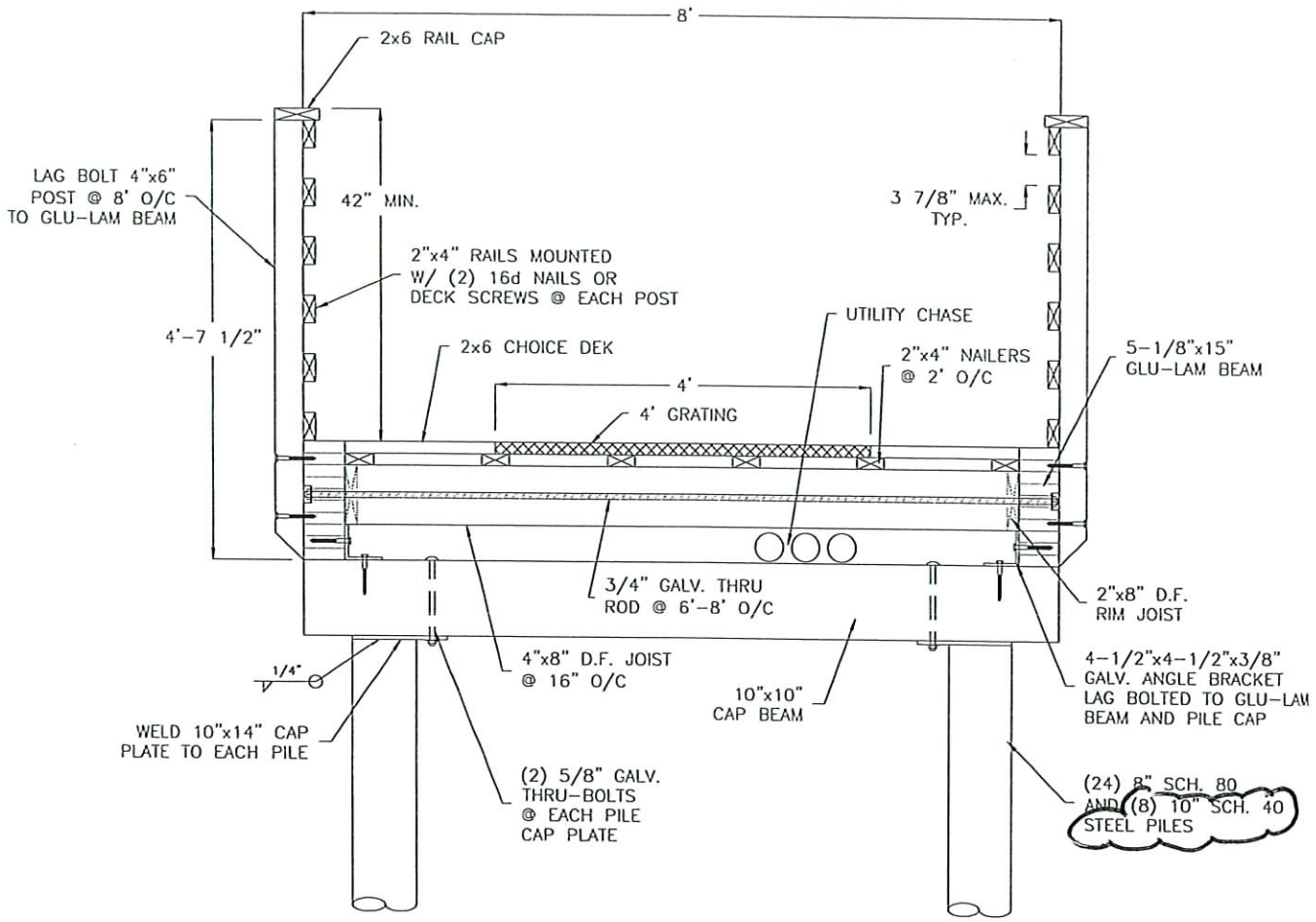

FIXED PIER SECTION A-A

2' 1' 6" 0' 2'

SCALE: 1/2"=1'

HOLMES HARBOR FIXED PIER, FLOAT AND BULKHEAD MATERIAL LIST		
PART	SPECIFICATIONS	TREATMENT
FIXED PIER DECKING	2"x6" CHOICEDEK COMPOSITE	NONE
FIXED PIER RAIL CAP	2"x6" D.F. #1	ACZA
FIXED PIER SIDE RAIL	2"x4" D.F. #1	ACZA
FIXED PIER HAND RAIL POST	4"x6" D.F. #1	ACZA
FIXED PIER GRATING	MOLDED PLASTIC	NONE
FIXED PIER NAILER	2"x4" D.F. #1	ACZA
FIXED PIER CAP BEAM	10"x10" D.F. #1	ACZA
FIXED PIER STRINGER	5-1/8"x15" D.F. #1 GLU-LAM BEAM	ACZA
FIXED PIER JOIST	4"x8" D.F. #1	ACZA
FIXED PIER RIM JOIST	2"x8" D.F. #1	NONE
FIXED PIER PILING (24)	8" SCH. 80 STEEL	GALVANIZED OR EPOXY COATED
FIXED PIER PILING (8)	10" SCH. 40 STEEL	GALVANIZED OR EPOXY COATED
FIXED PIER THRU ROD	3/4" STEEL	GALVANIZED
ALL HARDWARE	SOLID STEEL	GALVANIZED

REVISED
9-20-2004

200401222

PROPOSED: RE-ESTABLISH FIXED PIER, RAMP, AND FLOAT PIER. REPAIR/ REPLACE BULKHEAD.	
IN: HOLMES HARBOR, WHIDBEY ISLAND	
AT: FREELAND	REVISED:
APPLICANT: HOLMES HARBOR COMMUNITY PARTNERS, LLC 5023 HARBOR HILLS DRIVE FREELAND, WA. 98249-9798	
SHEET: 7 OF: 14	
DATE: 9-8-04	DWG#: 03-3250-A.12-1

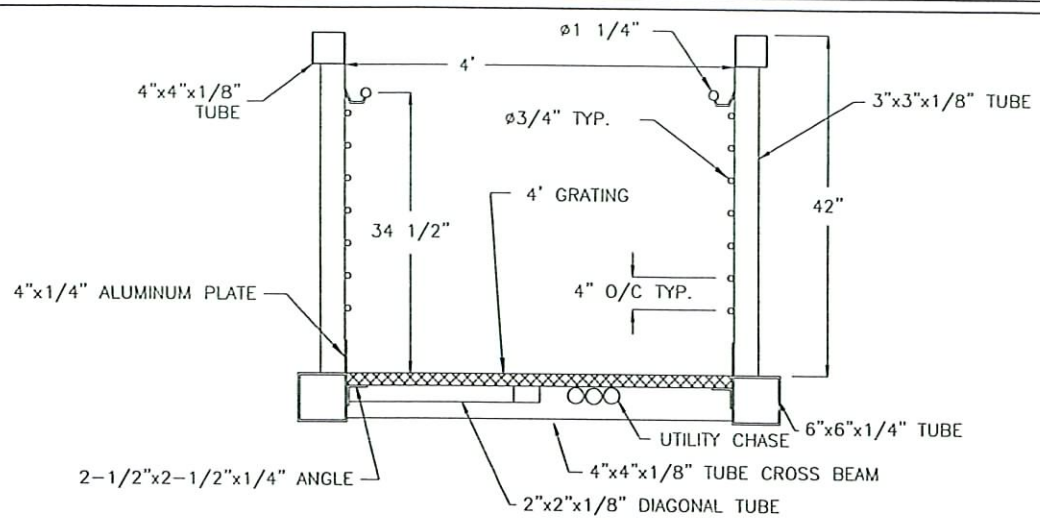

RAMP SECTION B-B

SCALE: 1/2"=1'

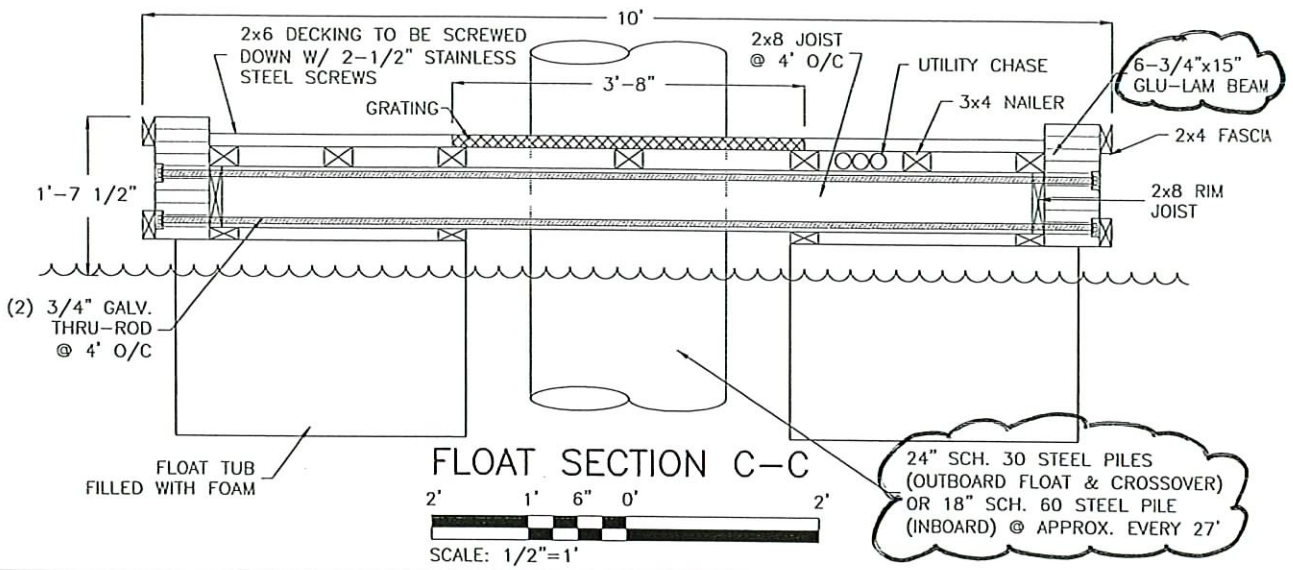

FLOAT SECTION C-C

2' 1' 6" 0' 2'

SCALE: 1/2"=1'

HOLMES HARBOR FIXED PIER, FLOAT AND BULKHEAD MATERIAL LIST

PART	SPECIFICATIONS	TREATMENT
RAMP	4"x4" & 3"x3" ALUMINUM ANGLE	NONE
FLOAT DECKING	2"x6" CHOICEDEK COMPOSITE	NONE
FLOAT GRATING	MOLDED PLASTIC	NONE
FLOAT NAILER	3"x4" D.F. #1	ACZA
FLOAT STRINGER	6-3/4"x15" D.F. #1 GLU-LAM BEAM	ACZA
FLOAT JOIST	DOUBLE 2"x8" D.F. #1	ACZA
FLOAT DIAGONAL JOIST	3"x8" D.F. #1	ACZA
FLOAT RIM JOIST	2"x8" D.F. #1	ACZA
FLOAT FASCIA	2"x4" D.F. #1	ACZA
FLOAT FLOATATION	HIGH DENSITY FOAM FILLED	PLASTIC SHELL W/ FULLY ENCLOSED FOAM
IN BOARD FLOAT PILING (13)	18" SCH. 60 STEEL	GALVANIZED OR EPOXY COATED
CROSSOVER & OUTBOARD FLOAT PILING (15)	24" SCH. 30 STEEL	GALVANIZED OR EPOXY COATED
FLOAT THRU ROD	3/4" STEEL	GALVANIZED
ALL HARDWARE	SOLID STEEL	GALVANIZED

REVISED
9-20-2004
20040122

PROPOSED: RE-ESTABLISH FIXED PIER, RAMP, AND FLOAT PIER. REPAIR/ REPLACE BULKHEAD.	
IN: HOLMES HARBOR, WHIDBEY ISLAND	
AT: FREELAND	REVISED:
APPLICANT: HOLMES HARBOR COMMUNITY PARTNERS, LLC 5023 HARBOR HILLS DRIVE FREELAND, WA. 98249-9798	
SHEET: 8 OF: 14	
DATE: 9-8-04	DWG#: 03-3250-A.13-1

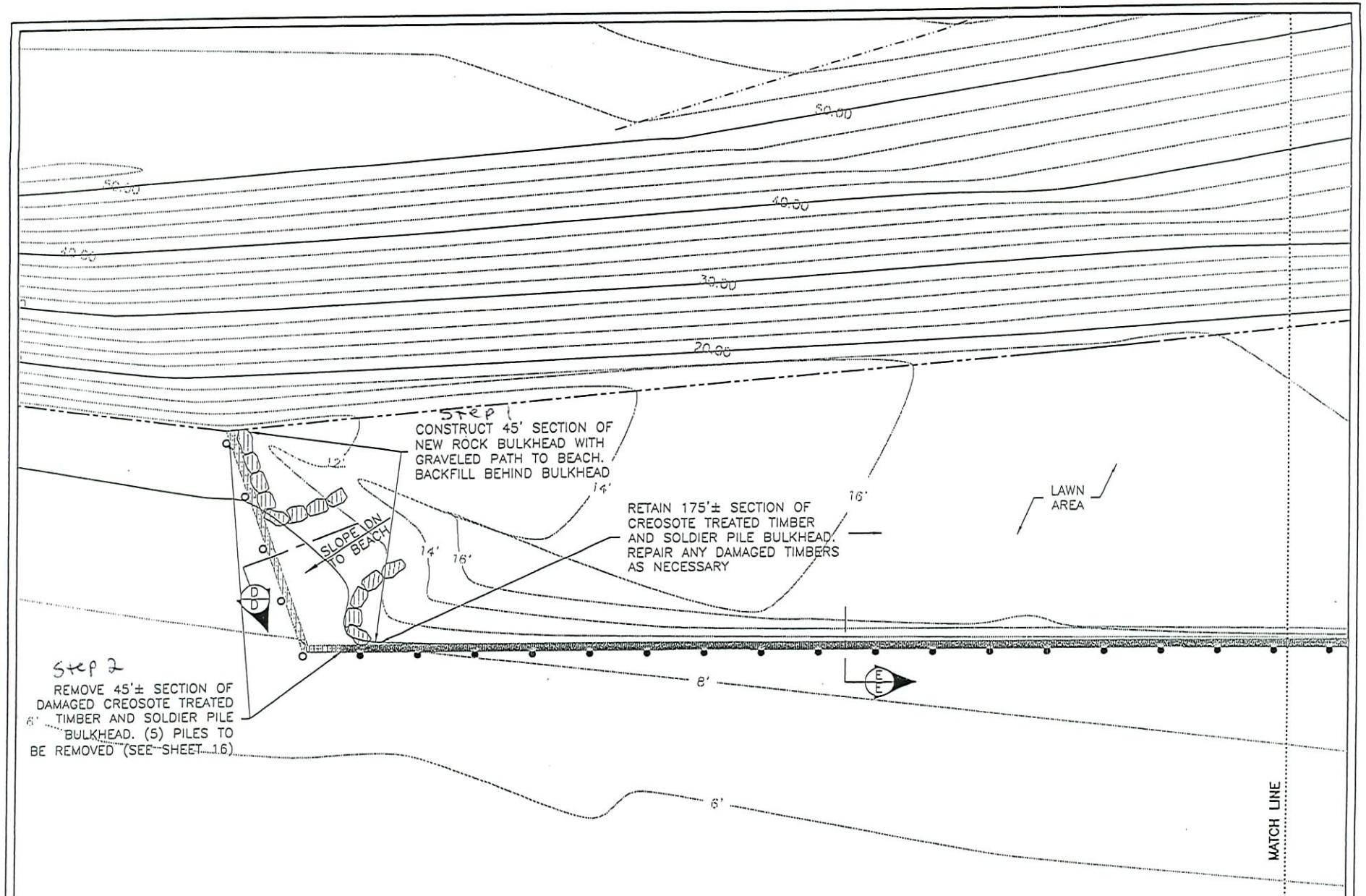

SOUTH BULKHEAD DETAIL

20' 15' 10' 5' 0' 20'

SCALE: 1"=20'

PROPOSED: RE-ESTABLISH FIXED PIER, RAMP, AND FLOAT PIER. REPLACE BULKHEAD.	
IN: HOLMES HARBOR, WHIDBEY ISLAND	
AT: FREELAND	REVISED:
APPLICANT: HOLMES HARBOR COMMUNITY, LLC 5023 HARBOR HILLS DRIVE FREELAND, WA. 98249-9798	
SHEET: 9 OF: 14	
DATE: 9-8-04	DWG#: 03-3250-A.14-1

Rev. 9-20-04 2004 01222

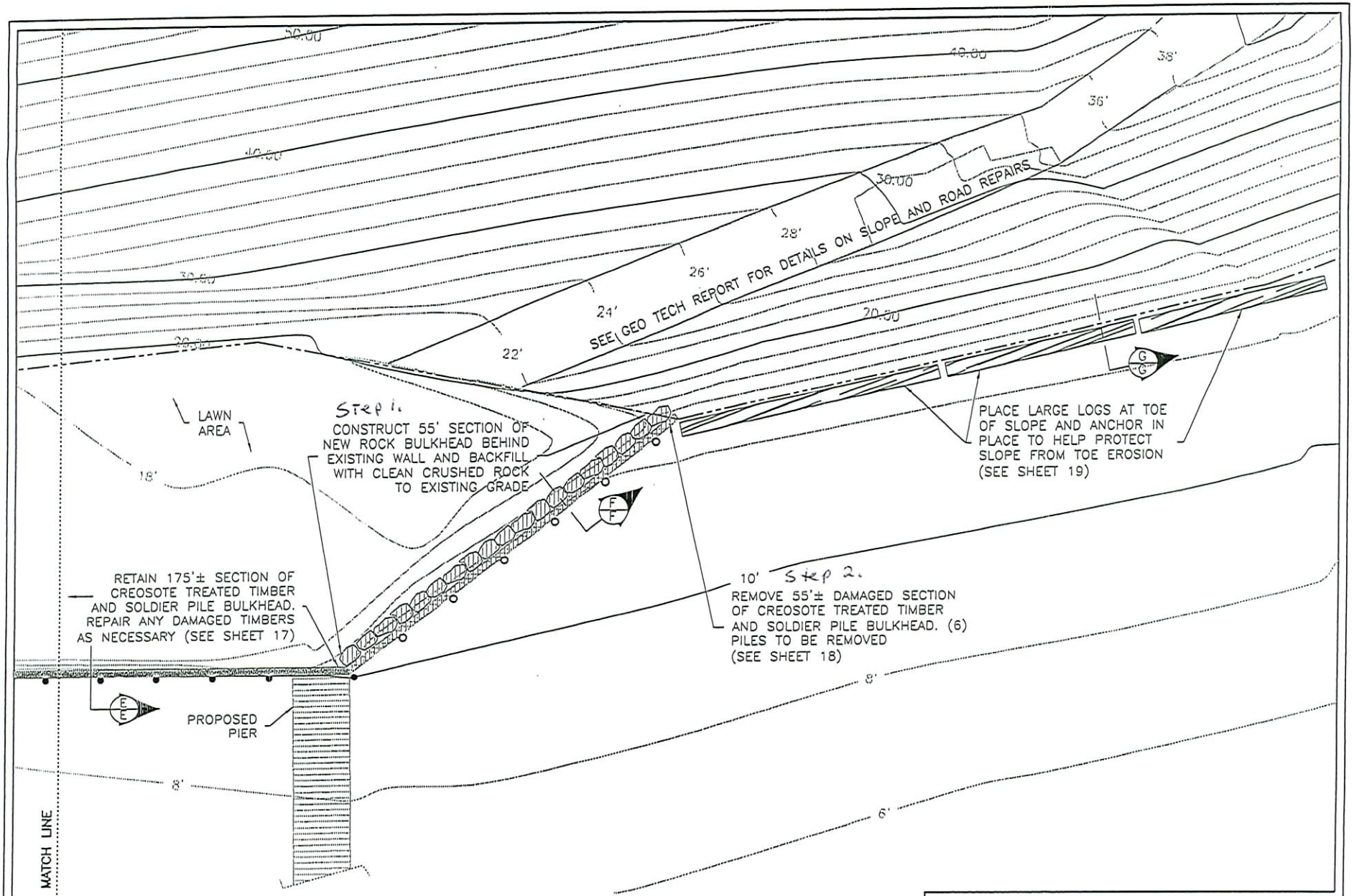

NORTH BULKHEAD DETAIL

20' 15' 10' 5' 0' 20'

SCALE: 1"=20'

PROPOSED: RE-ESTABLISH FIXED PIER, RAMP, AND FLOAT PIER. REPLACE BULKHEAD.	
IN: HOLMES HARBOR, WHIDBEY ISLAND	
AT: FREELAND	REVISED:
APPLICANT: HOLMES HARBOR COMMUNITY, LLC 5023 HARBOR HILLS DRIVE FREELAND, WA. 98249-9798	
SHEET: 10 OF: 14	
DATE: 9-8-04	DWG#: 03-3250-A.15-1

Rev 9-20-04 2004 0122 22

HOLMES HARBOR FIXED PIER, FLOAT AND BULKHEAD MATERIAL LIST		
PART	SPECIFICATIONS	TREATMENT
BASE ROCKS	5 TO 6 MAN SIZED BASALT	N/A
LAYERED ROCKS	3 TO 4 MAN SIZED BASALT	N/A
BACKFILL ROCKS	4" TO 6" CRUSHED BASALT RIP RAP	N/A
TOPPING ROCKS	1" TO 2" CRUSHED BASALT RIP RAP	N/A

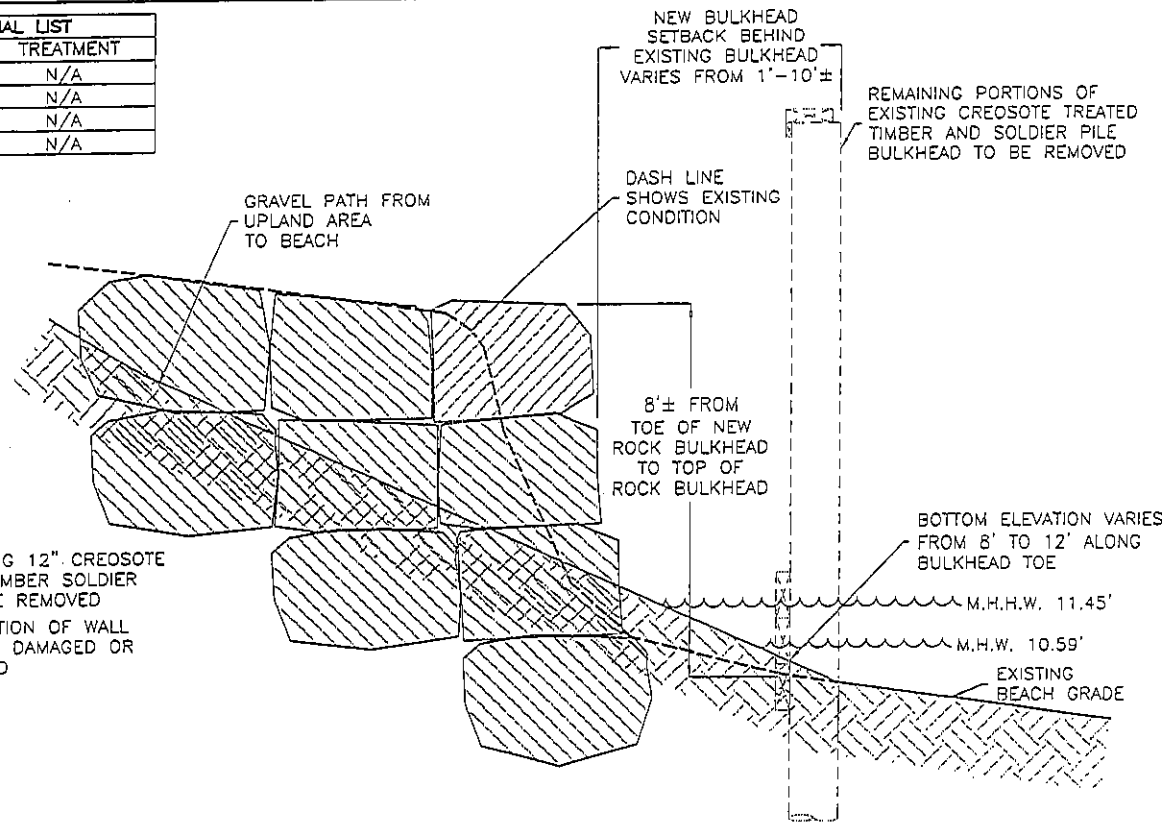

PROPOSED SECTION D–D

4' 3' 2' 1' 0' 4'

SCALE: 1/4"=1'

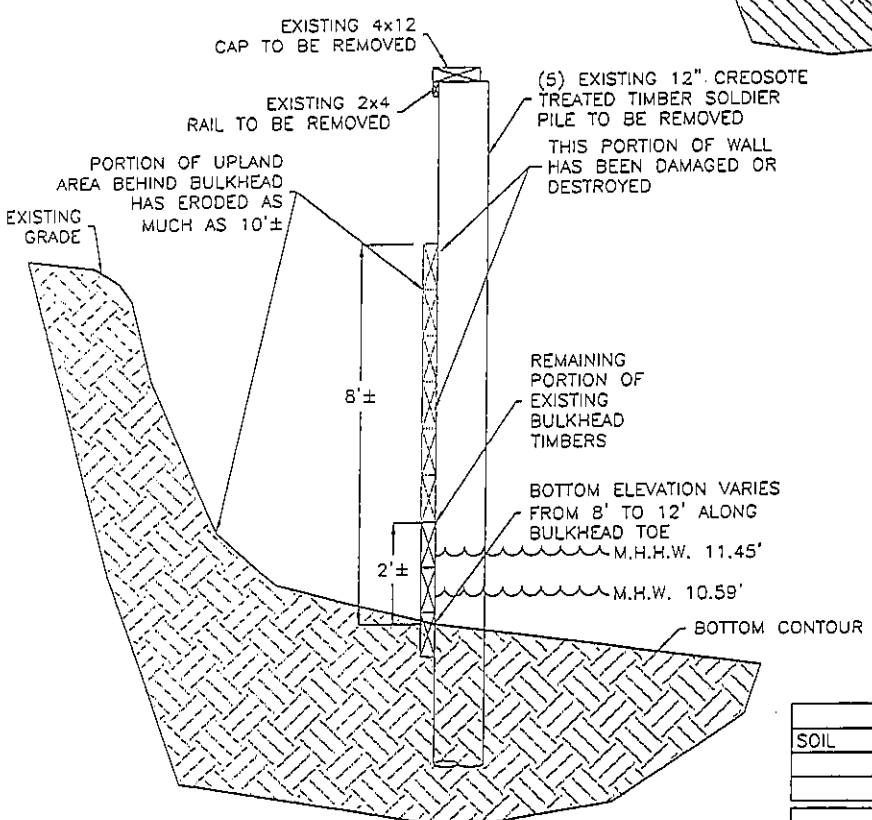

EXISTING SECTION D–D

SCALE: 1/4"=1'

CUT	
SOIL	25 C/Y
TOTAL=	25 C/Y

FILL	
ROCKERY	55 C/Y
BACKFILL	30 C/Y
TOP SOIL	5 C/Y
TOTAL=	90 C/Y

PROPOSED: RE-ESTABLISH FIXED PIER, RAMP, AND FLOAT PIER. REPAIR/REPLACE BULKHEAD.

IN: HOLMES HARBOR, WHIDBEY ISLAND

AT: FREELAND | REVISED:

APPLICANT: HOLMES HARBOR COMMUNITY PARTNERS, LLC
5023 HARBOR HILLS DRIVE
FREELAND, WA. 98249-9798

SHEET: 11 OF: 14

DATE: 9-8-04 | DWG#: 03-3250-A.16-1

Rev. 9-20-04 2004 01222

HOLMES HARBOR FIXED PIER, FLOAT AND BULKHEAD MATERIAL LIST		
PART	SPECIFICATIONS	TREATMENT
BULKHEAD TIMBER	4"x12" D.F. #1	ACZA
BASE ROCKS	5 TO 6 MAN SIZED BASALT	N/A
ALL HARDWARE	SOLID STEEL	GALVANIZED

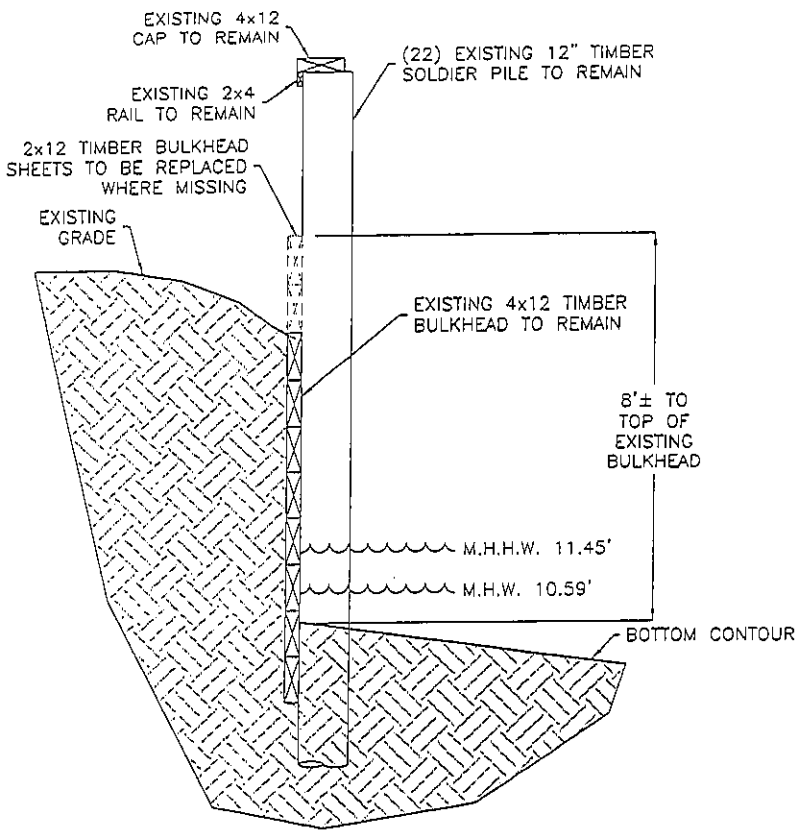

EXISTING SECTION E–E

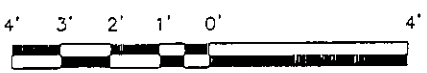

SCALE: 1/4"=1'

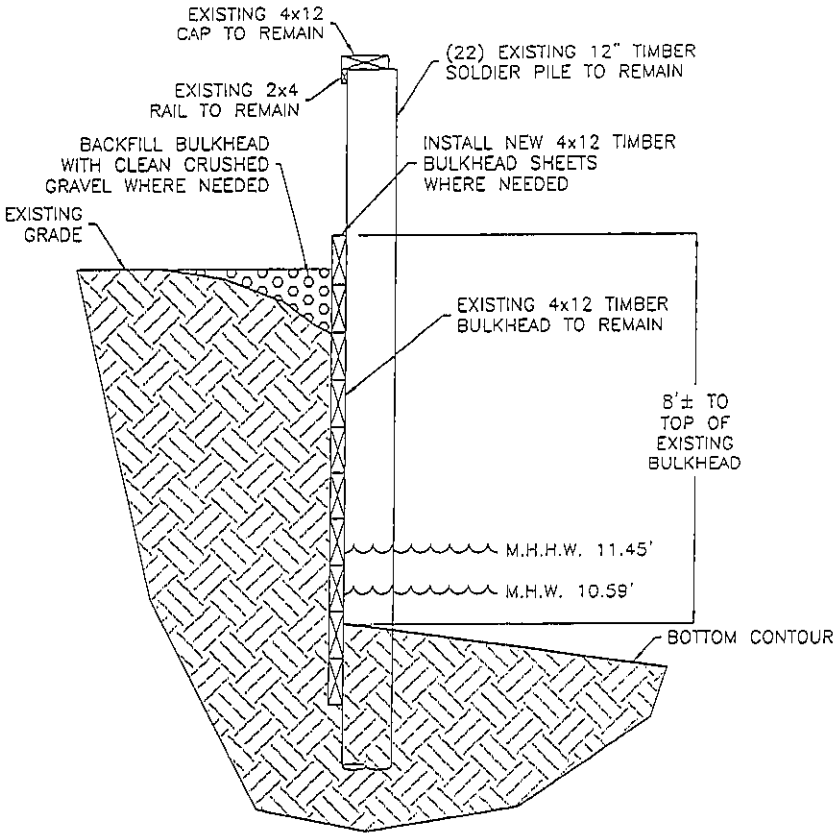

PROPOSED SECTION E–E

SCALE: 1/4"=1'

CUT	
SOIL	0 C/Y
TOTAL=	0 C/Y

FILL	
BACKFILL	20 C/Y
TOTAL=	20 C/Y

PROPOSED: RE-ESTABLISH FIXED PIER, RAMP, AND FLOAT PIER. REPAIR/REPLACE BULKHEAD.
IN: HOLMES HARBOR, WHIDBEY ISLAND
AT: FREELAND | REVISED:
APPLICANT: HOLMES HARBOR COMMUNITY PARTNERS, LLC
5023 HARBOR HILLS DRIVE
FREELAND, WA. 98249-9798
SHEET: 12 OF: 14
DATE: 9-8-04 | DWG#: 03-3250-A.17-1

Rev. 9-20-04 R004 01222

HOLMES HARBOR FIXED PIER, FLOAT AND BULKHEAD MATERIAL LIST		
PART	SPECIFICATIONS	TREATMENT
BASE ROCKS	5 TO 6 MAN SIZED BASALT	N/A
LAYERED ROCKS	3 TO 4 MAN SIZED BASALT	N/A
BACKFILL ROCKS	4" TO 6" CRUSHED BASALT RIP RAP	N/A
TOPPING ROCKS	1" TO 2" CRUSHED BASALT RIP RAP	N/A

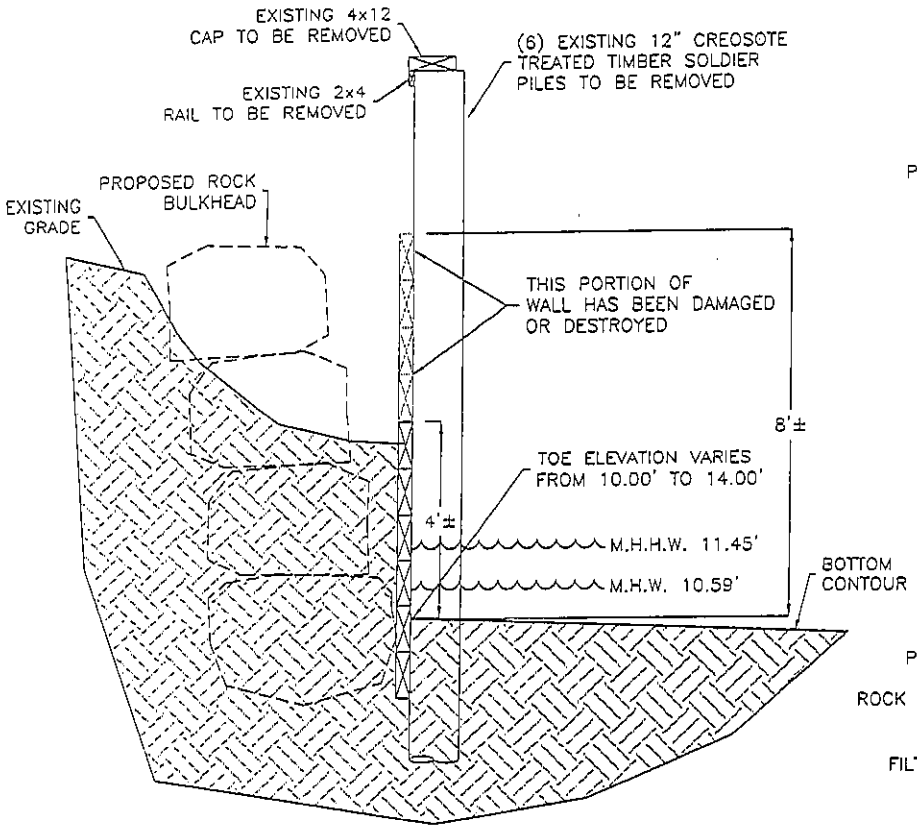

EXISTING SECTION F–F

4' 3' 2' 1' 0' 4'

SCALE: 1/4"=1'

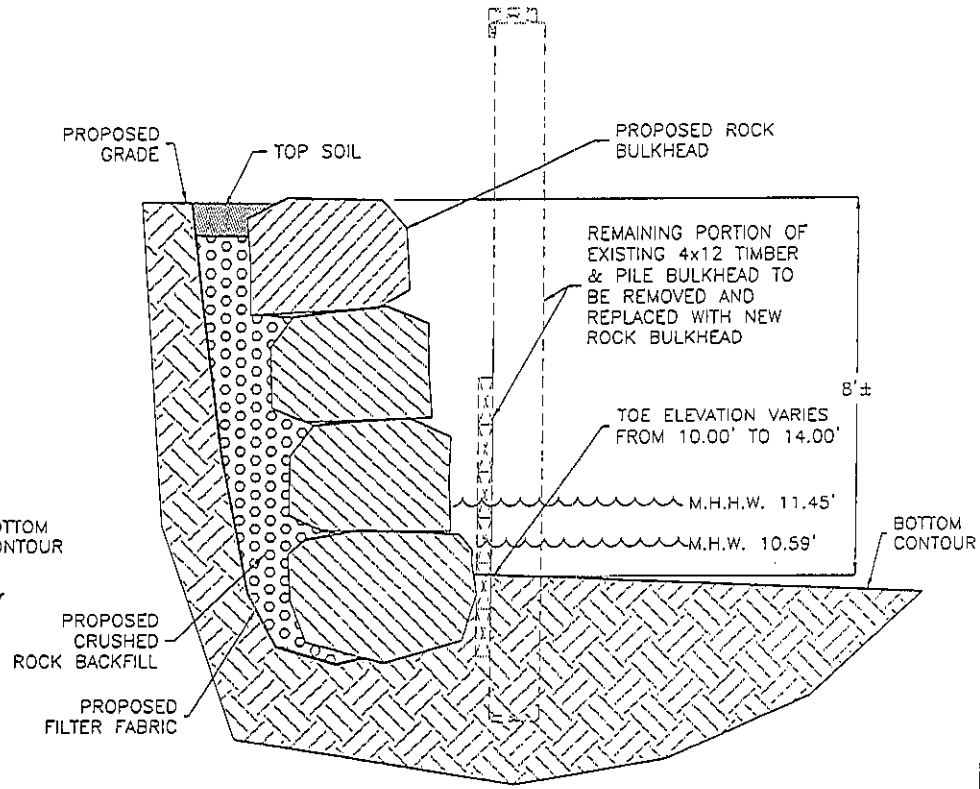

PROPOSED SECTION F–F

SCALE: 1/4"=1'

CUT	
SOIL	50 C/Y
TOTAL=	50 C/Y

FILL	
ROCKS	78 C/Y
BACKFILL	46 C/Y
TOP SOIL	5 C/Y
TOTAL=	129 C/Y

PROPOSED: RE–ESTABLISH FIXED PIER, RAMP, AND FLOAT PIER. REPAIR/REPLACE BULKHEAD.

IN: HOLMES HARBOR, WHIDBEY ISLAND

AT: FREELAND | REVISED:

APPLICANT: HOLMES HARBOR COMMUNITY PARTNERS, LLC
5023 HARBOR HILLS DRIVE
FREELAND, WA. 98249–9798

SHEET: 13 OF: 14

DATE: 9–8–04 | DWG#: 03–3250–A.18–1

Rev 9-20-04 20040122

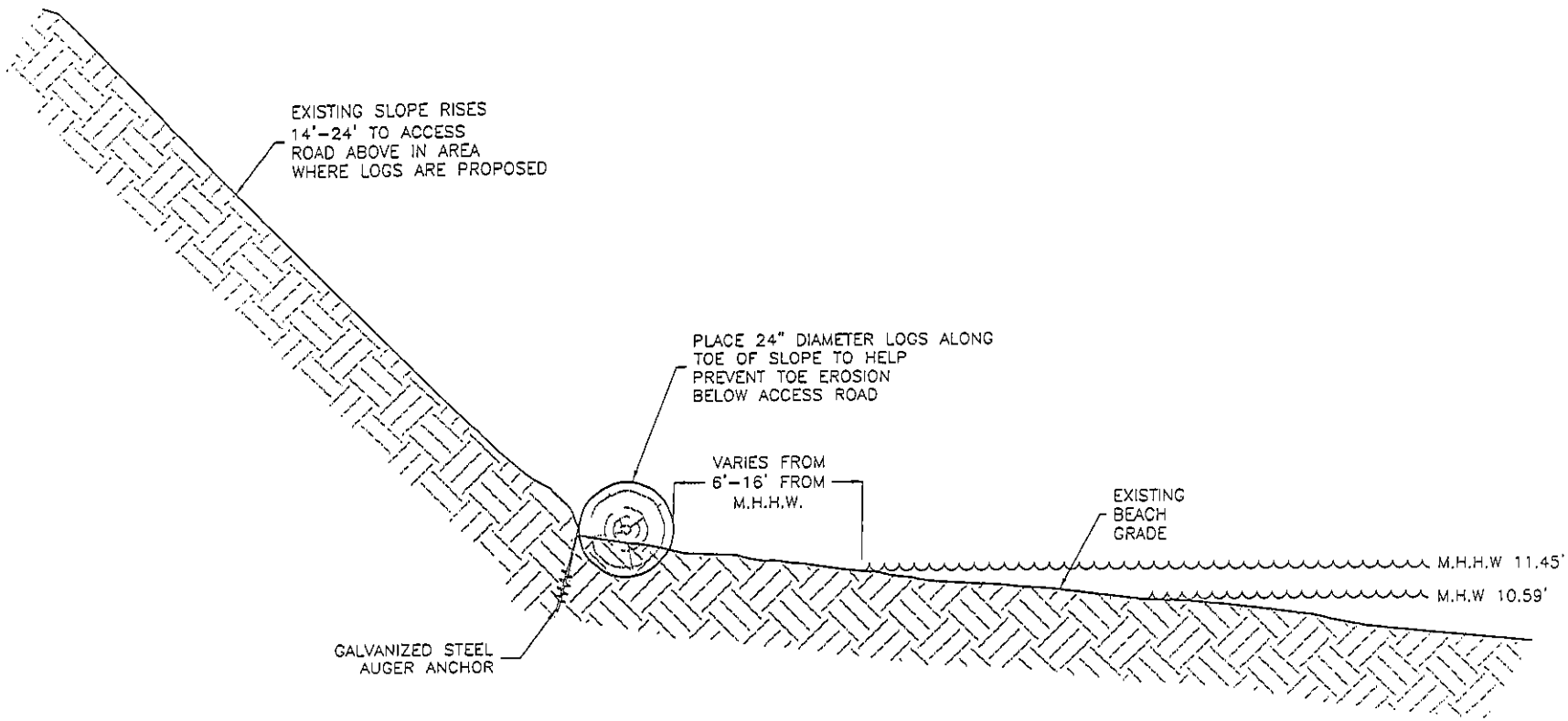

SECTION G-G

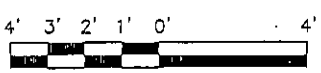

SCALE: 3/16"=1'

HOLMES HARBOR FIXED PIER, FLOAT AND BULKHEAD MATERIAL LIST		
PART	SPECIFICATIONS	TREATMENT
TOE PROTECTION LOG	24" DIAMETER	NONE
TOE PROTECTION LOG ANCHOR	STEEL	GALVANIZED

PROPOSED: RE-ESTABLISH FIXED PIER, RAMP, AND FLOAT PIER. REPAIR/REPLACE BULKHEAD.	
IN: HOLMES HARBOR, WHIDBEY ISLAND	
AT: FREELAND	REVISED:
APPLICANT: HOLMES HARBOR COMMUNITY PARTNERS, LLC 5023 HARBOR HILLS DRIVE FREELAND, WA. 98249-9798	
SHEET: 14 OF: 14	
DATE: 9-8-04	DWG#: 03-3250-A.19-1

Rev. 9-20-04 200401222