Howard A. Hanson Dam
Additional Water Storage Project

Section 902 Post Authorization Change Validation Study – Fish Passage

King County, Washington

APPENDIX B

ENGINEERING

PART 2 OF 2

Final Integrated Validation Report and

Supplemental Environmental Impact Statement

US Army Corps of Engineers®
Seattle District

TACOMA POWER | TACOMA WATER | TACOMA RAIL
TACOMA PUBLIC UTILITIES

Howard A. Hanson Dam
Additional Water Storage Project

Section 902 Post Authorization Change Validation Study – Fish Passage

King County, Washington

APPENDIX B-10

2008 95% DESIGN DOCUMENTATION REPORT

Final Integrated Validation Report and

Supplemental Environmental Impact Statement

US Army Corps of Engineers
Seattle District

TACOMA POWER | TACOMA WATER | TACOMA RAIL
TACOMA PUBLIC UTILITIES

95% IEPR Design Documentation Report

Additional Water Storage Project, Fish Passage Facility

Howard Hanson Dam
Green River, Washington

October 2009



INDEPENDENT EXTERNAL PEER REVIEW

prepared by

US Army Corps of Engineers®
Seattle District

TABLE OF CONTENTS

Chapter/Paragraph **Page No.**

EXECUTIVE SUMMARY XII

CHAPTER 1 GENERAL DESCRIPTION 1

1.1 AUTHORIZATION 1
1.2 BACKGROUND AND SCOPE OF HHD AWS PROJECT 1
1.3 EXISTING FACILITY 3
1.3.1 Location 3
1.3.2 History and Authorized Purpose 3
1.3.3 Dam 3
1.3.4 Outlet Works 3
1.3.5 Spillway 4
1.3.6 Auxiliary Buildings 4
1.3.7 Roads 4
1.3.8 Reservoir 4
1.3.9 Project Operation 5
1.4 SITE GEOLOGY 6
1.5 NEW FISH PASSAGE FACILITY 6
1.5.1 Background and Need 6
1.5.2 Scope of Fish Passage Facility 8
1.5.3 Summary of New Features and Operation 8
1.6 FISH PASSAGE TECHNICAL COMMITTEE 11
1.6.1 Feasibility Level Design 11
1.6.2 Preliminary Engineering and Design Phase 12
1.6.3 Construction Phase 12
1.7 OPERATIONAL DESIGN FEATURES (CHANGES IN WATER STORAGE) 12
1.8 MONITORING 13
1.9 GENERAL DESIGN CRITERIA 13
1.9.1 General Guides and Codes 14
1.9.2 Corps of Engineers Guidance Documents 14
1.9.3 Structural Loads 15
1.9.4 Soil and Rock Parameters 15
1.9.5 Hydraulic Design 15
1.10 REFERENCES 16

CHAPTER 2 HYDROLOGIC ANALYSES 25

2.1 WATER MANAGEMENT - GENERAL 25
2.2 EXISTING WATER SUPPLY DIVERSION 25
2.3 STREAM FLOW MEASUREMENTS 26
2.4 TACOMA WELLS 26
2.5 WASHINGTON STATE INSTREAM FLOWS 27
2.6 AGREEMENT BETWEEN MUCKLESHOOT INDIAN TRIBE AND TACOMA 28

2.7 SECTION 1135 RESTORATION STORAGE 30
2.8 FLOOD CONTROL 30

CHAPTER 3 FISHERIES 34

3.1 GENERAL 34
3.2 GREEN RIVER FISHERIES 34
3.2.1 Upper Green River habitat 35
3.2.2 Juvenile downstream migration 35
3.3 FISH PASSAGE OBJECTIVES 36
3.4 DOWNSTREAM FISH FACILITY OPERATION 37
3.4.1 Fishing Season 37
3.4.2 Fish Collection 37
3.4.3 Incline Fish Screen and Bypass 38
3.4.4 Fish Well and Hoist 38
3.4.5 Monitoring Facility 39
3.4.6 Downstream Release 40
3.6 ATTRACTION FLOW 41
3.7 TEMPERATURE MANAGEMENT 41
3.8 DEBRIS 42
3.5 UPSTREAM FISH PASSAGE 43
3.9 MONITORING AND ADAPTIVE MANAGEMENT PROGRAM 43
3.10 REFERENCES 44

CHAPTER 4 (RESERVED) **54**

CHAPTER 5 HYDRAULIC DESIGN **55**

5.1 HYDRAULIC DESIGN CRITERIA 55
5.1.1 Operational Criteria *56*
5.1.2 Collector Horn *56*
5.1.3 Dewatering Screen *56*
5.1.4 Bypass and Fish Collection *57*
5.2 PHYSICAL HYDRAULIC MODEL STUDIES 57
5.2.1 1:50 Scale General Model *59*
5.2.2 1:15 Scale Model *61*
5.2.3 Previous 1:8 Scale Model (ENSR 2003a) *66*
5.2.4 Final 1:8 Scale Model (AECOM 2009) *66*
5.2.6 Model Fish Well *70*
5.2.7 Torque Testing *71*

5.3 HYDRAULIC DESIGN 71
5.3.1 Trashrack Design 71
5.3.2 Entrance Well 73
5.3.3 Dewatering Stoplogs 73
5.3.4 Wet Well 73
5.3.5 Wet Well Refill Pipe and Features 74
5.3.6 Fish Collector Array 74
5.3.7 Fish Well 81
5.3.8 Attraction Water Conduit (AWC) and Features 82
5.3.9 Wet Well Plumbing 90
5.3.10 Operational Bulkheads 90
5.3.11 Hydraulic Design Summary 91
5.4 REFERENCES 92

CHAPTER 6 GEOTECHNICAL DESIGN 95

6.1 GENERAL 95
6.2 GEOTECHNICAL DESIGN CRITERIA 95
6.3 GEOTECHNICAL DESIGN FOR THE NEW FISH PASSAGE FACILITY 96
6.3.1 Geotechnical Investigations 97
6.3.2 Instrumentation – Existing Structures, Rock Pillar and Excavation 98
6.3.3 Existing Outlet Tunnel Liner Strengthening and Drain Hole Cleaning 102
6.3.4 Relocated Access Road 102
6.3.5 Excavation, Slope Treatment, and Foundation Treatment 103
6.3.6 Attraction Water Conduit 104
6.3.7 Personnel Access Tunnel 105
6.3.8 Water Control Measures 105
6.3.9 Estimation of Horizontal Soil Pressures from Backfill Between the FPF and the Excavation Walls 106
6.3.10 Construction Material Sources 106
6.3.11 Excavation Material Disposal 106
6.4 REFERENCES 106

CHAPTER 7 STRUCTURAL DESIGN 109

7.1 STRUCTURAL DESIGN CRITERIA 109
7.2 FEATURE DESCRIPTION 110
7.2.1 Existing Cofferdam (Phase I) 110
7.2.2 Existing Cofferdam Trashrack (Phase I) 110
7.2.3 Wet Well 111
7.2.4 Inclined Fish Screen (IFS) and Inclined Fish Screen Enclosure. 111
7.2.5 Fish Well 112
7.2.6 Valve/Gate Chambers and Tower 112
7.2.7 Pedestrian Bridge 113
7.2.8 Stoplogs 113
7.2.9 Gantry Crane and Support Platform 114
7.2.10 Attraction Water Conduit 115
7.2.11 Emergency Gate 115
7.2.12 Regulating Gate 115

7.2.13 Monitoring Station *116*
7.2.14 Boat Gate *116*
7.2.15 Fish Passage Debris Boom *117*
7.3 DESIGN CONSIDERATIONS 118
7.3.1 Personnel Access *118*
7.3.2 Safety *118*
7.3.3 Concrete *118*
7.3.4 Tunnel construction *119*

CHAPTER 8 CIVIL DESIGN 120

8.1 DESIGN CRITERIA 120
8.2 FEATURE DESCRIPTION 120
8.2.1 Project Master Plan *120*
8.2.2 Road Design *120*
8.2.3 Utilities *121*
8.2.4 Monitoring Station *124*
8.2.5 Administration Building (Volume 3) *124*
8.2.6 Maintenance Building (Volume 3) *125*

CHAPTER 9 ARCHITECTURAL DESIGN 127

9.1 GENERAL 127
9.2 CRITERIA REFERENCES 127
9.3 DESIGN CRITERIA 127
9.3.1 Exterior Influences *127*
9.4 BASIC ANALYSIS 129
9.4.1 Master Plan/Future Expansion *129*
9.4.2 Interior Composition *129*
9.4.3 Accessibility *130*
9.4.4 Fire Protection and Life Safety *130*
9.5 BUILDING SYSTEMS, MATERIAL AND EQUIPMENT 131
9.5.1 General *131*
9.5.2 Concrete *131*
9.5.3 Thermal and Moisture Protection *131*
9.5.4 Doors and Windows *131*
9.5.5 Finishes *131*
9.5.6 Furnishings *131*
9.5.7 Color Selection *132*

CHAPTER 10 MECHANICAL DESIGN 133

10.1 DESIGN CRITERIA 133
10.1.1 Life Cycle Design *134*
10.1.2 Material Selection *135*
10.1.3 Minimum Factors of Safety *135*
10.1.4 Pipe Velocities *136*
10.1.5 Pressure Testing *136*
10.2 FEATURE DESCRIPTION 136
10.2.1 Cofferdam *136*

10.2.2 Attraction Water Conduit (AWC) *138*
10.2.3 Chambers Connected to the Wet Well *139*
10.2.4 Inclined Fish Screen (IFS) *141*
10.2.5 Fish Collector Miter Gates *142*
10.2.6 Fish Bypass Pipes *142*
10.2.7 Other Features Upstream of the Tower *143*
10.2.8 Fish Well *144*
10.2.9 Tower *150*
10.3 HYDRAULIC POWER EQUIPMENT 151
10.3.1 Conventional Hydraulic Power Equipment *152*
10.3.2 Water Hydraulic Power Equipment *152*
10.4 FISH PASSAGE CONTROLS 154
10.4.1 FPF Refill and Shutdown *154*
10.4.2 FPF Operation *155*
10.4.3 Control Room Monitors *157*
10.5 HEATING, VENTILATING, AND AIR CONDITIONING 157
10.5.1 General *157*
10.5.2 Functional and Technical Requirements. *157*
10.5.3 Design Conditions. *158*
10.5.4 Design Objectives and Provisions *159*
10.5.5 Calculations *159*
10.6 PLUMBING 160
10.6.1 General *160*
10.6.2 Functional and Technical Requirements *160*
10.6.3 Calculations *160*
10.7 FIRE PROTECTION, DETECTION AND SMOKE CONTROL SYSTEMS 161
10.7.1 Fire Protection System Requirements *161*
10.7.2 Initiation Devices *161*
10.7.3 Combined Standpipe and Sprinkler System *161*
10.7.4 Stairwell Pressurization System and Gallery Smoke Exhaust Systems *162*
10.8 OTHER EQUIPMENT 163
10.8.1 Elevator *163*
10.8.2 Miscellaneous *163*

CHAPTER 11 ELECTRICAL DESIGN 165

11.1 DESIGN CRITERIA 165
11.2 ELECTRICAL DISTRIBUTION SYSTEM 166
11.2.1 Existing Conditions *166*
11.2.2 Proposed New Distribution System *166*
11.2.3 Load Analysis *167*
11.3 SUPPORT FACILITIES 167
11.3.1 Existing Tower *167*
11.3.2 Administration Building *167*
11.3.3 Maintenance Building *168*
11.4 FISH PASSAGE FACILITY 168
11.4.1 Interior Electrical Distribution *168*
11.4.2 Lighting *168*

11.4.3 Wiring Methods *169*
11.4.4 Controls *169*
11.4.5 Communications *169*
11.4.6 Generator *170*
11.4.7 Fish Monitoring and Transport Station *170*

CHAPTER 12 MONITORING STATION DESIGN 171

12.1 COMPONENT AND SYSTEM DESIGN 173
12.1.1 Lift Hopper *173*
12.1.2 Lift Hopper Docking Station *173*
12.1.3 Holding Tanks *174*
12.1.4 Truck Transfer Tanks *174*
12.1.5 Transfer Flumes *174*
12.1.6 Diverter Gates *175*
12.1.7 Water Control Structures *175*
12.1.8 Indoor Fish Processing Tanks and Equipment *175*
12.1.9 Fish Counting Provisions *175*
12.1.10 Life Support Water Supply System *176*
12.1.11 Flume Wetting Water Supply System *177*
12.1.12 Utility Water Supply System *179*
12.1.13 Monitoring Station Drain System *180*
12.1.14 Compressed Air Systems *182*
12.1.15 Holding Tank Crowders *182*
12.1.16 Heating and Lighting *182*
12.1.17 Pumping Systems *182*
12.2 CONTROLS 183
12.2.1 Transfer Operation Controls *183*
12.2.1 Lift Hopper Controls *183*
12.3 FLOOD AND OFF SEASON PROCEDURES 185
12.3.1 Off Season Procedures *185*
12.3.1 Flooding Procedures *186*

CHAPTER 13 OPERATION AND MAINTENANCE 186

13.1 FLOOD OPERATIONS 186
13.2 RESERVOIR REFILL 187
13.3 RESERVOIR DRAWDOWN 187
13.4 LOW FLOW AUGMENTATION 188
13.5 TEMPERATURE MANAGEMENT 188
13.6 DEBRIS MANAGEMENT 189
13.6.1 Containment and Defense Facilities *189*
13.7 FISH HANDLING 189
13.7.1 Proposed Periodicity of Fish Passage Facility Operation *190*
13.8 DAILY OPERATIONS 196
13.8.1 Normal *196*
13.8.2 Emergency *196*
13.9 REFERENCES 197

CHAPTER 14 REAL ESTATE 200

14.1 GENERAL DESCRIPTION 200
14.2 CONSTRUCTION PHASES 200
14.3 POOL RAISE, FISH AND WILDLIFE MITIGATION AND RESTORATION SITES 200
14.4 EXTENSION OF EXISTING UNDERGROUND DRAINAGE TUNNEL 201
14.5 GEOTECHNICAL WORK AREAS AND BUILDINGS ON CORPS-OWNED LANDS 201
14.6 GEOTECHNICAL WORK AREA DISPOSAL SITE OUTSIDE CORPS-OWNED LANDS 201
14.7 ESTATES, GENERAL 202
14.8 STANDARD ESTATES 203
14.8.1 Fee Estate 203
14.8.2 Road Easement 203
14.8.3 Pipeline Easement 203
14.8.4 Temporary Disposal Easement 204
14.8.5 Temporary Work Area Easement 204
14.9 NON-STANDARD ESTATES 204
14.9.1 Drainage Wells and Underground Drainage Tunnel 205
14.9.2 Modifications for Environmental Restoration and Mitigation 205

CHAPTER 15 COST ENGINEERING 207

15.1 COST ESTIMATE 207

CHAPTER 16 CONSTRUCTION CONSIDERATIONS 208

16.1 OPERATION AND MAINTENANCE DURING CONSTRUCTION 208
16.1.1 Reservoir Refill and Flow Augmentation 208
16.1.2 Fish Handling 208
16.2 ENVIRONMENTAL COMPLIANCE 208
16.3 ENDANGERED SPECIES ACT 210
16.3.1 Programmatic Biological Assessment 210

CHAPTER 17 (CONCRETE MATERIALS INVESTIGATION) 211

17.1 CONCRETE MATERIALS INVESTIGATION 211

CHAPTER 18 ENVIRONMENTAL DOCUMENTATION 212

18.1 ENVIRONMENTAL COMPLIANCE 212
18.2 ARCHAEOLOGICAL AND HISTORIC RESOURCES 213
18.3 CLEAN WATER ACT 213
18.4 ENDANGERED SPECIES ACT 213

CHAPTER 19 VALUE ENGINEERING 215

CHAPTER 20 TECHNICAL REVIEW 216

20.1 INTERNAL QUALITY CONTROL REVIEW (QC) 216
20.2 INDEPENDENT TECHNICAL REVIEWS (ITR): 216
20.3 BIDDABILITY, CONSTRUCTIBILITY, OPERABILITY AND ENVIRONMENTAL (BCOE) REVIEW 216

CHAPTER 21 OUTLINE SPECS 217

DIVISION 1 FRONTS 217
DIVISION 2 SITEWORK 217

DIVISION 3 CONCRETE 219
OTHER 219
DEBRIS BOOM 219
MECHANICAL 220
ELECTRICAL 220

FIGURES

FIGURE 1-1. VICINITY AND AREA MAPS 17
FIGURE 1-2. TOPOGRAPHIC LOCATION, HOWARD A. HANSON DAM PROJECT 18
FIGURE 1-3. PROJECT SITE MAP 19
FIGURE 1-4. LONGITUDINAL SECTION OF FISH PASSAGE FACILITY 20
FIGURE 1-5. FISH PASSAGE FACILITY PLAN – EL. 1181 FEET (MONITORING STATION, FLUMES AND FISH HOISTING EQUIPMENT NOT SHOWN) 21
FIGURE 1-6. THREE-DIMENSIONAL VIEW OF INTAKE STRUCTURE 23
FIGURE 1-7. SIMULATED TYPICAL RANGE IN HAH RESERVOIR ELEVATIONS UNDER PHASE I AWSP**ERROR! BOOKMARK NOT DEFI**
FIGURE 2-1. FLOOD CONTROL STORAGE CURVE FOR HOWARD A. HANSON DAM RESERVOIR 32
FIGURE 5-1. COMPUTED BYPASS DISCHARGE RATING CURVE. 77
FIGURE 5-2. ATTRACTION WATER CONDUIT RADIAL GATE RATING CURVE REFERENCED TO WET WELL WATER SURFACE ELEVATION. 85
FIGURE 5-3. WATER SURFACE PROFILE PREDICTIONS USING HEC-RAS AND PHYSICAL MODEL RESULTS FOR FLOW SCENARIO (1) 86
FIGURE 5-4. WATER SURFACE PROFILE PREDICTIONS USING HEC-RAS AND PHYSICAL MODEL RESULTS FOR FLOW SCENARIO (2) 87
FIGURE 5-5. WATER SURFACE PROFILE PREDICTIONS USING HEC-RAS AND PHYSICAL MODEL RESULTS FOR FLOW SCENARIO (3) 87
FIGURE 5-6. AWC COMPUTED CAVITATION INDEX VALUES D/S OF THE RADIAL GATE 88
FIGURE 13-1. TIMING OF FRESHWATER LIFE PHASES OF SELECTED SALMONID SPECIES IN THE GREEN/DUWAMISH BASIN. 193
FIGURE 13-2. FLOOD CONTROL STORAGE CURVE FOR HOWARD A. HANSON RESERVOIR. 194

TABLES

TABLE 2-1. CHRONOLOGY OF EVENTS AFFECTING STREAM FLOW 25
TABLE 2-2. STREAMGAGE LOCATIONS AND AVERAGE DISCHARGE 26
TABLE 2-3. INSTREAM FLOW CONTROL LOCATIONS 27
TABLE 2-4. INSTREAM FLOWS FOR FUTURE WATER RIGHTS IN THE GREEN RIVER BASIN 28
TABLE 2-5 AUBURN INSTREAM FLOW BY WEATHER CONDITION 29
TABLE 2-6. PALMER INSTREAM FLOW BY SEASON 29
TABLE 2-7. AUBURN INSTREAM FLOW BY SEASON 29
TABLE 5.1 ASSUMED SCREEN LOSS COEFFICIENTS 79
TABLE 5.2 SINGLE COLLECTOR HEAD LOSS DUE TO SCREEN OBSTRUCTION 80
TABLE 5.3 COLLECTOR FLOW SPLIT DUE TO SCREEN OBSTRUCTION 80
TABLE 5-4. SUMMARY OF FISH PASSAGE FACILITY HYDRAULIC DESIGN RECOMMENDATIONS 91
TABLE 6-1. TABLE OF FPF GEOTECHNICAL DESIGN ELEMENTS 97
TABLE 6-2. INSTRUMENTATION THRESHOLD VALUES AND LIMITING VALUES 100
TABLE 9-1. ESTIMATED SQUARE FOOTAGES, ADMINISTRATION BUILDING 129
TABLE 13-1. PROPOSED SCHEDULE OF OPERATION OF DOWNSTREAM FISH PASSAGE FACILITY (MODULAR INCLINED SCREEN) 195
TABLE 13-2. ESTIMATED PERCENT OF TIME THAT FISH PASSAGE FACILITY WILL BE OPERATED UNDER THREE GIVEN CONDITIONS (USACE RECORDS: JANUARY 1, 1962 – FEBRUARY 9, 1999) 196

TABLE 14-1. PHASE I PROJECT REAL ESTATE INTERESTS 202
TABLE 14-2. PHASE II PROJECT REAL ESTATE INTERESTS 202
TABLE 18-1. STATUS OF PROJECT WITH APPLICABLE LAWS AND STATUTES
TABLE 18-2. SUMMARY DETERMINATION OF EFFECT FOR HHD CONTINUED O&M AND AWS PROJECT

APPENDICES

Appendix A	Glossaries
Appendix B	Geotechnical Baseline Report
Appendix C	Monitoring and Adaptive Management Plan
Appendix D	Juvenile Fish Screening Criteria, NMFS
Appendix E	Architectural Design Catalog Cuts
Appendix F	Mechanical Design Calculations and Catalog Cuts
Appendix G	Civil Design Calculations
Appendix H	Structural Design Calculations [not included this submittal]
Appendix I	Hydraulic Design Calculations [not included this submittal]
Appendix J	Electrical Design Calculations and Catalog Cuts
Appendix K	Cofferdam Safety Memorandum
Appendix L	Post-Feasibility Design Changes

PLATES

(DRAWING SHEETS ARE BOUND SEPARATELY)

EXECUTIVE SUMMARY

This draft Design Documentation Report (DDR) documents the 2009 95% Design and anticipated construction activities for a new fish passage facility at Howard A. Hanson Dam (HHD), on the Green River, Washington. The fish passage facility is a major component of the Additional Water Storage (AWS) Project at the dam. Implementation of the AWS Project was authorized by the Water Resources Development Act of 1999 following a Pre-construction and Engineering Design agreement reached in March of that year.

The Additional Water Storage Project is the preferred alternative resulting from a feasibility study and report, including Environmental Impact Statement, which was initiated by Seattle District, US Army Corps of Engineers, at the request of Tacoma Public Utilities (TPU). The City of Tacoma has a water right, issued by the Washington Department of Ecology, for the city's Second Supply Project and has requested that water diverted under the authority of this right be stored annually at the project. Begun in August 1989, the feasibility study determined that HHD could be used to supply additional water to meet the Municipal and Industrial (M&I) water supply needs of the Puget Sound area and provide downstream and upstream ecosystem restoration for fish and wildlife in the Green River watershed. In 1994 the scope of the study was expanded to include ecosystem restoration. During the study, the Corps and TPU worked closely with other federal and state resource agencies and the Muckleshoot Indian Tribe (MIT).

The feasibility study found that the preferred alternative for accomplishing the objectives is a dual-purpose water supply and ecosystem restoration project with phased implementation:

- Phase I, storage of 20,000 acre-feet (ac-ft) for M&I water supply; and
- Phase II, additional storage of 2,400 ac-ft for M&I water supply and 9,600 ac-ft for low-flow augmentation (LFA).

Phase I includes construction of all mitigation features having to do with raising the pool to elevation 1167 feet and all ecosystem restoration features. These features include the fish passage facility, right dam abutment seepage mitigation, and Phase I fish and wildlife habitat mitigation. All habitat mitigation features have been completed. Phase 1 water storage was initiated in 2007. Phase 1 project features yet to be completed include the fish passage facility and several habitat restoration projects. Phase II includes construction of all remaining project mitigation features required for a pool raise to elevation 1177 feet. With the additional 2,400 ac-ft of M&I water plus 9,600 ac-ft of LFA water to be stored under Phase II, a combined total of 32,000 ac-ft of additional water supply will be stored at HHD.

This DDR discusses only the design of the Phase I fish passage facility. The design includes the following new features:

- an entrance well and trashrack;
- a vertical array of five fixed collectors, each consisting of a collector horn and an inclined dewatering screen;

- a fish well fed by a fish bypass from the fish collectors;
- a fish basket, hoist, and truck docking station to transport fish to downstream release areas;
- an attraction water conduit tunnel;
- a personnel access tunnel connecting the outlet tower and FPF at approximately elevation 1074; and
- an access and vent shaft tower, with access bridge to tower and work platform.

The non-federal sponsor pays 100 percent of the cost allocable to M&I water supply and 35 percent of the cost allocable to ecosystem restoration with the federal government paying the remaining 65 percent of the cost allocable to ecosystem restoration. Fish passage facility cost is allocated primarily to the federal government. The City of Tacoma is responsible for a percentage of facility costs related to the additional water storage in the reservoir.

Restoration of downstream fish passage through the HHD Project is the keystone of the ecosystem restoration. The fish passage facility represents a major investment with an equally significant benefit to the anadromous fishery resources in the basin, providing improved utilization of over 106 miles of upstream salmonid habitat. The storage of an additional 32,000 ac-ft of water for M&I water, as proposed in the ultimate development, will provide a stable, cost-effective water supply for Tacoma and vicinity well into the twenty-first century.

CHAPTER 1 GENERAL DESCRIPTION

1.1 AUTHORIZATION

Howard A. Hanson Dam (HHD) Project was authorized by the Rivers and Harbors Act of 1950 (Public Law 516, 81st Congress, 2nd Session, 17 May 1950) to provide flood control, downstream low-flow augmentation (LFA), irrigation, and municipal and industrial (M&I) water supply. The combined Feasibility Study (FS) and Environmental Impact Statement (EIS) for Additional Water Storage (AWS) were authorized under Section 216, Public Law 91-611, Review of Completed Projects, River, Harbor and Flood Control Act of 1970. In March 1999, a Pre-construction and Engineering Design agreement was signed, and the project was authorized in August by the Water Resources Development Act of 1999.

1.2 BACKGROUND AND SCOPE OF HHD AWS PROJECT

The basic design of the Additional Water Storage Project is based on the preferred alternative identified in the feasibility study and report and environmental impact statement, which was initiated by Seattle District, US Army Corps of Engineers (USACE, the Corps), at the request of Tacoma Public Utilities (TPU). The project sponsor, City of Tacoma, was issued a water right in 1986 by the Washington Department of Ecology for up to 100 cubic feet per second (cfs) from the Green River for the city's Second Supply Water Project (SSWR). The city requested that additional storage for the water be provided at Howard Hanson Dam.

Begun in August 1989, the feasibility study determined that HHD could be used to supply additional water to meet the Municipal and Industrial (M&I) water supply needs of the Puget Sound area, and provide downstream and upstream ecosystem restoration for fish and wildlife in the Green River watershed. The scope of the feasibility study was expanded in 1994, in response to a change in federal law, to include ecosystem restoration as a second project purpose. During the study, the Corps and TPU worked closely with other federal and state resource agencies, and the Muckleshoot Indian Tribe (MIT).

The feasibility study found that the preferred alternative for accomplishing the objectives is a dual-purpose water supply and ecosystem restoration project with phased implementation:

- Phase I, storage of 20,000 acre-feet (ac-ft) for M&I water supply; and
- Phase II, additional storage of 2,400 ac-ft for M&I water supply and 9,600 ac-ft for low-flow augmentation (LFA).

The Phase I pool raise includes construction of all mitigation features having to do with raising the pool to elevation (el.) 1167 feet, and all ecosystem restoration features. This includes a fish passage facility, right dam abutment seepage mitigation, and Phase I fish and wildlife habitat mitigation. The Phase II pool raise includes construction of all remaining project mitigation

features required for a pool raise to el. 1177 feet. With the additional 2,400 ac-ft of M&I water plus 9,600 ac-ft of LFA water to be stored under Phase II, a combined total of 32,000 ac-ft of additional water will be stored at HHD.

The feasibility study recommended that the existing HHD project be modified to include the following features:

- new fish collection and transport facility including: a wet well, a fish collector, a fish well, an attraction water discharge conduit, a fish transport pipeline and fish monitoring station;
- mitigation features including management of riparian forests, planting of water-tolerant vegetation and maintenance of instream habitat in Phase I and Phase II;
- ecosystem restoration features other than fish passage including gravel nourishment, a side channel reconnection project, and river and stream habitat improvements;
- right abutment drainage remediation;
- new access bridge and access road;
- new buildings, or additions to existing buildings, including administration and maintenance buildings;
- change in reservoir operation (Phase I) to store 20,000 ac-ft of M&I water to el. 1167 feet in the spring for release in the summer and fall; and
- change in reservoir operation (Phase II) to store an additional 12,000 ac-ft of water, 2,400 ac-ft for M&I water supply and 9,600 ac-ft of water for LFA, to el. 1177 feet in the spring for release in the summer and fall.

This DDR discusses only the design of the Phase I fish passage facility. The design has been developed to 95 percent. This DDR also discusses changes and refinements to the fish passage facility design that occurred subsequent to approval of the feasibility design.

A new pipeline (Pipeline No. 5) has been constructed by Tacoma Public Utilities to transport stored water to regional customers in connection with the HHD AWS Project. TPU was granted a permit under Section 404 of the Clean Water Act to construct Pipeline No. 5. Tacoma operates an unfiltered surface water supply in compliance with EPA requirements. Protection of water quality during fish facility project construction and operation is therefore of critical importance.

Restoration of fish passage through the HHD Project is the keystone of the ecosystem restoration component of the project. It is also a primary component of the salmon recovery plan approved by the National Marine Fisheries Service for recovery of Puget Sound Chinook salmon and steelhead both listed as threatened under the Endangered Species Act. The fish passage facility represents a major investment with an equally significant benefit to the anadromous fishery resources in the basin. The storage of an additional 32,000 ac-ft of water as proposed in the ultimate development will provide a stable, cost-effective water supply for Tacoma and vicinity for many years to come.

1.3 EXISTING FACILITY

1.3.1 Location

The Howard A. Hanson Dam Project is located on the Green River 35 miles southeast of Seattle, 25 miles east of Tacoma, 7 miles upstream from Kanaskat (see Figures 1-1 and 1-2 at the end of the chapter). The dam itself is at river mile 64.5. The project lies entirely within the City of Tacoma municipal watershed and is closed to the public.

1.3.2 History and Authorized Purpose

Howard Hanson Dam was constructed in the late 1950s and put into operation in 1961. The project was authorized to provide flood control, downstream low-flow augmentation, irrigation, and M&I water supply. The irrigation and water supply portions of the authorization were never implemented. The HHD Project has provided an estimated $695 million in flood damage prevention through 1996, and allowed for billions of dollars worth of commercial and industrial development in the protected floodplain, resulting in employment opportunities, while allowing Tacoma to meet its drinking water quality objectives.

At present, the Corps stores approximately 24,200 ac-ft of water behind HHD for downstream LFA during the summer and fall; 1,200 ac-ft is held in dead storage for a total volume of 25,400 ac-ft. An additional 5,000 ac-ft of water for LFA is authorized through a Section 1135 restoration project. Tacoma Public Utilities presently diverts up to 113 cfs of water, at their diversion dam, to provide M&I water to Tacoma under their first diversion water right (FDWR) claim. TPU is also authorized to divert 100 cfs of M&I water under its Second Supply Water Right (SSWR). This 100 cfs SSWR is conditioned by the state-established minimum instream flows and the Muckleshoot Indian Tribe/Tacoma Public Utilities (MIT/TPU) Agreement, which establishes minimum instream flows for the Green River through each calendar year. Flow constraints in the MIT/TPU Agreement exceed the current state established minimum flows.

1.3.3 Dam

Howard A. Hanson Dam is an earth-filled structure composed of rolled rock fill, sand and gravel core, drain zones, and rock shell protection. An overview of the project site is shown in Figure 1-3 at the end of this chapter. The embankment at the crest (el. 1228 feet NGVD) is 235 feet high and 500 feet long and has an inclined core of sand and gravel material.

1.3.4 Outlet Works

The existing outlet works consist of a gate tower and intake structure with two radial gates, a 19-foot-diameter concrete horseshoe-shaped outlet tunnel, a gate-controlled bypass, and a stilling basin. Radial gate inverts are at el. 1035 feet NGVD. The 900-foot-long outlet tunnel

passes normal flow released for project regulation. Low-flow releases during the summer conservation period are made through a 48-inch bypass conduit with an entrance intake invert at el. 1069 feet. This outlet has a capacity of approximately 500 cfs at maximum conservation pool (el. 1141 feet).

1.3.5 Spillway

The existing spillway is anchored in rock on the left abutment and in a concrete monolith adjacent to the embankment. The spillway is a concrete ogee overflow section with two 30-foot-high by 45-foot-wide tainter gates to control major flood flows and prevent overtopping of the dam. The spillway crest elevation is 1176 feet. The downstream chute has a curved alignment and is paved for a distance of 712 feet downstream from the weir. The tainter gates permit surcharge to el. 1206 feet. Spillway discharge for the routed probable maximum flood (PMF) is 108,000 cfs with an associated maximum reservoir elevation of 1223.9 feet.

1.3.6 Auxiliary Buildings

There are currently three buildings on the project site.

- administration building, located in a fenced compound on the right dam abutment;
- fuel dispensing station and flammable materials storage building, located approximately 200 feet north of the administration building on Access Road A;
- maintenance building, located on the left abutment.

1.3.7 Roads

The project site includes various gravel-surfaced roads, which provide access to the dam, stilling basin, intake structures, and the reservoir.

1.3.8 Reservoir

The reservoir (conservation pool) extends approximately 4.5 miles eastward from the dam along the main river channel and 2 miles northerly up the main tributary of the North Fork of the Green River. The reservoir is normally maintained at minimum level (about el. 1070 feet) from the end of October to the end of February to provide flood control storage space. The reservoir provides 106,000 ac-ft of flood control storage at el. 1206 feet. Beginning around March the reservoir begins to fill to a maximum pool el. of 1141 feet to provide summer and early fall low-flow augmentation. During selected drought years, storage is brought to 1147 feet or 30,400 ac-ft as a result of the Section 1135 ecosystem restoration project. At full conservation pool level, the summer/fall reservoir impounds 25,400 ac-ft (30,400 ac-ft if the pool elevation reaches el. 1147) with a surface area of 732 acres: 24,200 ac-ft available for LFA and 1200 ac-ft in dead storage. The reservoir operational goals are to store excess storm flows, prevent late fall/winter

flooding and provide additional water from storage for low-flow periods in the summer and fall for conservation of fish resources.

In 2007, phase 1 water storage to 1167 ft was initiated and will be an annual project element. Implementation of the AWS project also resulted in annual storage of the 5,000 acre-ft of section 1135 water from 1141 ft to 1147 ft.

1.3.9 Project Operation

Flows are regulated manually by adjusting gate controls at the dam with direction from the Corps' Seattle District Water Management Section. The reservoir is kept as low as possible (essentially empty) during the flood season so that runoff from the watershed above project can be impounded as needed. The highest pool elevation ever attained was 1189 ft in 2008.. To date, it has not been necessary to use the spillway. The reservoir is drawn down, in normal years, to an elevation around 1070 feet by November 1 to provide full flood storage capacity in the reservoir.

During flood events, flow at Auburn is regulated to a maximum of 10,000 cfs while the flood is rising and a maximum 12,000 cfs during flood recession. Operations during recession are usually structured to release impounded flood water at a rate which ensures safe discharge within channel capacity in the downstream area and minimizes damage to levees from sloughing during evacuation of storage. Flood control operations are in accordance with the project's congressional authorization, so there is little flexibility to operate for other purposes during the flood season.

Floating debris is collected during periods of high water by stationary booms at the dam. Larger floating or sunken debris usually passes through the outlet tunnel and passes downstream, although it may lodge against the intake structure trashrack. This debris is removed periodically from the trashrack. The debris which is collected at the stationary booms is removed when reservoir conditions permit and is towed by barge to temporary holding areas. When water conditions permit, the reservoir is raised 3 to 5 feet above the normal full conservation pool to facilitate movement of debris to the upper holding areas. When the pool level has been lowered and ground conditions permit, the booms and salvageable material are removed. Until recently, the remainder has been sawed and piled by bulldozers for burning. With implementation of the Section 1135, AWS projects, and the Tacoma Water Habitat Conservation Plan, virtually all wood will be used in some fashion for environmental restoration.

Aside from flood control operation, during the late spring, summer, and early fall, the project has some operational flexibility within the parameters of the authorized used of the dam. Throughout the years that HHD has been in operation, many downstream changes have occurred in area land use, recreation, fisheries, resource allocation, and environmental awareness. All of these external influences have resulted in operational changes and manipulations, primarily manifested in the refill timing of the conservation pool and instream flow needs. The intent of operational changes is to provide the most responsive and equitable utilization of water amongst sometimes competing resource users.

1.4 SITE GEOLOGY

The Green River valley at the dam site is characterized by a present day post-glacial canyon, in which the dam is located, and a deeper, older, buried channel immediately to the north. During the latest interglacial period, the Green River cut its channel approximately 150 feet deeper than at present resulting in overly steep side slopes and collapse of the eastern valley slope. Several episodes of deposition, erosion, and landslides may have followed. The present gorge beneath the dam was cut as a result of river blockage by the last massive landslide off the northeast valley wall. Today this landslide is a major landform forming part of the right abutment of the dam. The present river channel has been eroded to approximately el. 1000 feet at the dam. Bedrock locally rises to approximately 1,150 feet on the right (north valley side) abutment. However, in most of the right abutment area, bedrock is near or below 1,000 feet with the rock surface dipping to about el. 900 feet in the localized buried channel. The rock on the right abutment is hydrothermally altered and weaker than most of the rock forming the left abutment. Landslide debris overlies the bedrock surface at the dam site and forms the upper portion of the right abutment.

Tertiary age volcanic rocks characterize the bedrock at the dam site. Locally, these rocks are known as the Eagle Gorge Andesite and regionally, they correlate with the Fifes Peak formation of early Miocene age. Regional dip of the bedrock is roughly 35 degrees southeast. In the vicinity of the new fish passage facility, the bedrock is composed of andesite and basaltic andesite flows, pyroclastic flows, tuffs, and breccias with acidic dikes and sills. Few mappable structures and stratigraphic patterns exist in this vicinity due to the depositional environment of the volcanic rocks and subsequent intense faulting, shearing, and hydrothermal alteration of the bedrock. For a more detailed description of the geology, hydrogeology and engineering rock properties of the left abutment rock mass, see the Geotechnical Baseline Report (Appendix B). For additional detail on the right abutment geology, see the Right Abutment Seepage Single Row Grout Curtain Foundation Report (USACE 2003).

The soils overlying the left abutment rock adjacent to the fish passage facility are non-homogeneous, consisting of medium dense to very dense silty sandy gravel, medium dense to very dense silty sand, and loose to dense sandy silt and silty sand. It is anticipated the distribution of these materials will vary across the site.

1.5 NEW FISH PASSAGE FACILITY

(Refer to Figures 1-4, 1-5 and 1-6 at the end of this chapter.)

1.5.1 Background and Need

The outlet works at HHD were designed to pass water for flood control in a hydraulically efficient manner without regard to passing fish. The two low-level entrances to the flood control tunnel at el. 1035 feet provide for flood control releases from the reservoir, and the 48-inch-

diameter low-flow bypass at el. 1069 feet provides for releases during the summer low-flow augmentation period. When HHD was constructed in the early 1960s there were no migrating fish runs in the upper river. The Tacoma Diversion Dam located 3 miles downstream provided a physical barrier separating the upper river from the lower river and prevented upstream migration of adult fish past the diversion. In the 1980s state resource agencies and the MIT began planting juvenile steelhead, coho, and Chinook in the upper river above HHD. Since there are no provisions for fish passage at the dam, water and outmigrating fish are passed from the reservoir through the two regulating outlets: the 48-inch low-flow bypass and the 19-foot outlet tunnel that is controlled by two radial gates.

When the reservoir is operating near the flood control pool elevation of 1070 feet, also known as the turbidity pool, downstream migrants are expected to pass relatively safely through the two 10-foot by 12-foot tunnel control gates and into the open channel flow of the flood control tunnel. However, as the reservoir rises during spring refill, submergence of the tunnel entrances hampers the ability of fish to locate the outlet to the reservoir passage (Dilley and Wunderlich 1992, 1993). During the summer high pool, the low-flow bypass is opened and also becomes submerged by as much as 75 feet. The geometry of the 48-inch bypass at its downstream end includes short radius elbows, a side opening into a 36-inch bypass (which is used once every 5 to 10 years for stilling basing inspection and repairs), and a vertical slide gate. These features are not conducive to safe juvenile salmonid bypass. Similar conditions of low attraction flow and deep submergence of the outlet at other reservoir projects have been linked to poor fish passage.

Under these conditions, fish may have difficulty locating the outlet, and thus may stay in the reservoir until the next flood control season when the pool is drawn down again. If they do reach and pass through the low-flow outlet under high head, the hydraulic conditions throughout the low-flow outlet conduit and control gate at the downstream end are such that very few fish survive the passage. As part of the AWS study, tests were conducted to determine rough estimates of survival through the flood control sluices and through the low-flow outlet. In addition, tracking studies were conducted to determine the ability of the fish to sense the outlet flow and actively seek it from the upstream limits of the reservoir. Vertical distribution studies were conducted to determine the distribution of fish throughout the vertical plane in the near vicinity of the outlet. The data and results of these studies are included in Appendix F, Part 1, of the AWS Project Feasibility Report, US Army Corps of Engineers (USACE 1998). The overall survival rate for fish outmigrating through these existing outlets is low, less than 70%. The injury rate is above 40%. Fish pass safely through the radial gates when the reservoir pool is less than about el. 1080 feet.

The new fish passage facility is designed to greatly increase survival though the reservoir and dam by providing safe passage through the dam itself, a near surface outlet, and large attraction flows so fish can easily locate the outlet. It is expected that the proposed fish passage will substantially improve the survival rate of juveniles migrating through it. An improved survival rate is necessary to accomplish the project goal of self-sustaining fish runs.

1.5.2 Scope of Fish Passage Facility

The fish passage facility will consist of new structures intended to pass migrating juvenile fish downstream through the dam. It will also be capable of passing adults migrating downstream including steelhead kelts. It is not intended to pass migrating adult fish upstream through the dam. The local sponsor completed a "trap and haul" facility in 2004 at the Tacoma diversion dam that is designed to provide upstream adult fish passage.

1.5.3 Summary of New Features and Operation

1.5.3.1 Design Features

Design features of the fish passage facility are (refer to Figures 1-4 through 1-6):

- an intake structure, entrance well and trashrack;
- a collector array consisting of five similar collectors set at equal spacing in a vertical column, with each collector comprised of a collector horn and an inclined screen within a screen enclosure;
- a fish well fed by a fish bypass pipe from each fish collector;
- a fish collection basket set within the fish well;
- a wet well connecting fish collectors to the attraction water conduit
- an attraction water conduit (AWC) with a radial regulating gate and a vertical emergency closure gate;
- a fish monitoring facility and fish truck transports;
- an access and vent shaft tower, with access bridge to tower and work platform;
- a crane, on rails spanning the deck of the new and existing outlet works; and
- all necessary mechanical, electrical, and hydraulic equipment.

A new administration building and maintenance building will also be constructed.

1.5.3.2 Fish Passage Facility Operation

Currently, the entire Green River flow must pass through the existing outlet works intake structure and, in extreme floods, over the spillway. Upon completion of the new fish passage facility, as much as 1,200 cfs may flow through new fish passage facility. The new intake structure and wet well for the fish passage facility will be located south (to the left looking downstream) of the existing intake tower.

Essentially, the fish passage facility will operate as a fish/water separator. The fish are separated from project outflow by an inclined screen contained within each collector and bypassed to the fish well. When either a time or fish density threshold is reached, a basket is hoisted through the fish well water column collecting fish and containing them in a small holding tank. The basket is raised above the surface of the facility deck, at which point fish and water are

discharged to a holding tank or a truck transfer tank. From the holding tank they may be diverted to the monitoring facility and from the truck transfer tanks they can be loaded into a transport truck and and conveyed to the river downstream.

The facility will provide for the operation of a single collector The individual features of the fish passage facility are described briefly in the following paragraphs. Additional engineering design details, configuration and dimensions of these features are discussed in the following chapters and detailed on the design drawings.

1.5.3.3 Trashrack, Entrance Well, and Wet Well

A full-height fixed steel trashrack is attached at the flared end of the entrance well structure to protect the fish passage facility from debris. The upstream end of the entrance well is flared to a width of 36.3 feet, and the right edge abuts the left side of the existing intake tower trashrack structure. The entrance well is that portion of the pool between the trashrack and the collector array. Operational bulkheads are located downstream of the inclined fish screens. The operational bulkheads are rectangular steel gates that are raised or lowered in position by hydraulic cylinders to prevent flow through the idle collectors.

1.5.3.4 Fish Collector Array

The fish collector array is a column of five geometrically similar fish collectors set one upon the other at equal spacing. The collectors are designed to operate in the fully submerged, pressurized condition. The collector consists of the horn, an inclined screen and fish bypass. The inclined screen is a dewatering screen that guides fish towards the entrance to the fish bypass conduit. The inclined screen will be hinged at the center to allow it to rotate for cleaning by backflushing. Sensors will be used to monitor flows and pressure differentials caused by debris accumulation on the screens. The fish bypass conduit transports fish bypass flow from the fish collector into the fish well.

1.5.3.5 Fish Well

The fish well is essentially a holding tank for fish that have been extracted from facility discharge flow. Fish enter the fish well through a collector bypass pipe. A basket, similar to a colander in function, is located in the bottom of the fish well. A fixed screen in the bottom of the fish well serves as a physical barrier to prevent fish from entering the well drain and valve network. The basket will be hoisted through the water column at given time or fish density thresholds collecting fish and a small portion of water as it rises up and out of the fish well. The fish will be discharged into a holding tank or truck at the top of the fish passage facility. The fish may be extracted from the holding tank at the monitoring facility, or be trucked for passage to the river downstream.

The well is 19 feet long by 17 feet wide with a floor elevation of 1044 feet. The well is approximately rectangular with a plan area of about 315 square feet. This means that a single fish well will be receiving on the order of 50 to 70 cfs for the duration of the hoisting cycle. Inflow velocities will be on the order of 5 ft/sec and 7 ft/sec at bypass discharges of 25 cfs and 35 cfs, respectively. The fish hopper will have an opening floor to allow it to be lowered back into the

fish well with the floor open to capture fish that had been collected in the fish well during the previous hoisting cycle. The hopper is lowered to the bottom of the fish well and the floor gradually closed. The floor scrapes the intake screen at the bottom of the fish well collecting any debris that deposited during the hoist cycle and ensuring that all fish are captured in the hopper.

1.5.3.6 Monitoring Station

The monitoring station is located in the new facility tower at the 1194 elevation. Holding tanks and flumes connecting the fish hopper, holding tanks, truck transfer, and monitoring station are outside the tower on a steel deck.. Fish can be sent directly into a holding tank for truck transfer or routed to a series of holding tanks for later examination. Fish can be separated by size before being routed to the latter holding tanks. Inside the tower, there is small anesthetizing tank, work-up table, and recovery tank.

1.5.3.7 Attraction Water Conduit (AWC)

The attraction water conduit (AWC) is a new outlet works tunnel that connects the fish passage facility to the existing outlet tunnel. It will be regulated by a radial gate and will also have an emergency control gate located just upstream of the radial gate. The attraction water conduit begins at the downstream end of the wet well structure, with a base elevation matching the wet well base elevation of 1029 feet. The AWC exits the wet well through a curved transition at the downstream end of the wet well and turns toward the existing outlet tunnel, which it joins at a confluence with an invert elevation and slope common with that of the flood control tunnel.

1.5.3.9 Access and Vent Shaft Tower, Gate Chamber, Access Bridge and Work Platform

The new intake tower will house the gate chamber, an air vent shaft, and access shaft, mechanical and electrical equipment, elevator, and the monitoring facility. The rectangular air vent shaft rises alongside the access shaft and is designed to provide the air required for free surface discharge within the AWC.

Presently, personnel can access the lower mechanical spaces in the flood control tower by way of a door and a stair starting at the el. 1140 level. With the fish passage facility, the areas adjacent to the flood control tower will be filled to el. 1181 feet. To avoid an additional 40 feet of stairs to descend and climb to and from the lower mechanical spaces, personnel will be able to use the elevator in the new tower, descend to the lower gallery of the fish passage facility and walk across to the old tower at el. 1067. An egress at el. 1181 feet is planned for the old tower for emergency purposes to replace the existing egress at 1140, which will be covered.

A 12-person capacity elevator will be installed within the tower to accommodate the tower operators and maintenance personnel. It will be used for transporting tools, small machinery and personnel between levels. The elevator will address project safety concerns by providing the capacity to transport an injured employee, lying on a stretcher, out of the tower.

A pedestrian access bridge at el. 1228 feet will provide utility and personnel access to the new tower, and will connect to the existing intake tower access bridge with an expansion joint.

A concrete maintenance or work platform is designed adjacent to the wet well and fish well structure to provide a work area for repair and maintenance of the stoplogs, the fish collector components, and the trashrack.

1.5.3.10 Buildings

Two new buildings associated with the fish passage facility design will be constructed: an administration building and a maintenance building addition. The maintenance building will provide a ventilated, heated and secure workspace for routine maintenance and repair work. It will also provide space for storing tools, spare parts, and maintenance supplies.

1.5.3.11 Cofferdam

A temporary cofferdam is required to construct the fish passage facility. Current authorization and operational agreements preclude lowering the reservoir to a "run-of-the-river" condition for the duration of project construction. This restriction effectively prevents dewatering the forebay in order to construct the lowermost components of the fish passage facility. The cofferdam will allow reservoir elevations of up to el. 1167 feet during the construction period. The cofferdam will become the upstream portion of the fish passage facility structure. The dewatering stoplogs of the cofferdam will allow work in the dry behind the cofferdam for reservoir elevations up to 1169 feet. The cofferdam construction was completed in 2006.

1.6 FISH PASSAGE TECHNICAL COMMITTEE

1.6.1 Feasibility Level Design

In 1989, a five-person Fish Passage Technical Committee (FPTC) was created to assist in formulating concepts, developing and evaluating alternatives, and selecting a final design for improving fish passage through the anticipated larger and deeper HHD reservoir. The five members were selected by the resource agencies, the Muckleshoot Indian Tribe (MIT), City of Tacoma, and Corps representatives as having the experience and technical expertise in dealing with fish passageways. Together, this group had over 150 years of research, design and evaluation experience. This FPTC included Ken Bates of the Washington Department of Fish and Wildlife (WDFW), Steve Rainey of the National Marine Fisheries Service (NMFS), Ed Donahue of Fish Pro, Inc., Phil Hilgert of Beak (now with R2 Resource Consultants), and Milo Bell, who was a retired fisheries researcher and consulting fisheries engineer.

In 1990, the FPTC produced the report entitled *Howard A. Hanson Dam Fish Passage Alternatives for Proposed New Operating Rule Curve*. This report recommended studies and methodologies for evaluating fish passage alternatives and provided initial fish passage design criteria. In 1992 the FPTC was reactivated to assist in developing, evaluating, and selecting a feasibility level fish passage concept for the proposed project. The Corps took the lead in preparing design concepts of possible fish passage facilities under the guidance of the FPTC.

During this process, resource agencies and MIT representatives participated as observers and participants to the interaction between the Corps designers and FPTC. In the winter of 1996, the FPTC provided final input in evaluating and selecting among the final fish passage alternatives.

Besides consideration of passage alternatives, the FPTC report also provided a framework of baseline studies necessary to assess the existing state of downstream fish passage at HHD as well as provide insights into potential changes in passage with the HHD AWS Project. These recommended fish studies resulted in a series of Baseline interagency monitoring studies performed by the US Fish and Wildlife Service (USFWS), WDFW, the MIT, the Corps and the City of Tacoma. These studies have provided additional guidance in development of design criteria and evaluation of the fish passage alternatives.

1.6.2 Preliminary Engineering and Design Phase

Continuing the process initiated during the Feasibility Study, the FPTC met throughout the course of the PED design process to review updated design concepts and recommend changes to better meet the requirements of the project. Design refinements to the approved feasibility design resulted from subsequent meetings of the FPTC and closer examination of the design.

1.6.3 Construction Phase

Throughout the design process, the FPTC has been periodically consulted about design changes, been requested to provide feedback on specific aspects of the design, or reviewed design reports. This continues to the current day. The FPTC are expected to review and provide feedback on the 95% design.

Representatives of the FPTC now include four continuing members, Ken Bates, Ed Donahue, Phil Hilgert, and Larry Swenson. Ken Bates now works as a consulting engineer and has been hired directly by Seattle District. Ed Donahue and Phil Hilgert have also been hired directly by Seattle District to continue their representation on the FPTC. Larry Swenson, NMFS fish passage engineer, is the sole regulatory agency representative on the FPTC.

1.7 OPERATIONAL DESIGN FEATURES (CHANGES IN WATER STORAGE)

Under Phase I, an additional 20,000 ac-ft of M&I water will be stored in the spring for release during the summer and fall to supply up to 100 cfs (65 mgd) of Tacoma's Second Supply water right. The water surface elevation would be 1167 feet. Tacoma will not divert SSWR water during the spring reservoir refill, but will allow it to be stored behind Howard Hanson Dam for use in summer and fall when there is a greater need for the water. It is assumed that the 5,000 ac-ft of water stored for low-flow augmentation, initially during drought years under the Section 1135 project, will be stored every year, through adaptive management, by the time Phase I is implemented.

Water storage will be adaptively managed so that downstream fisheries resources are not adversely affected. This could include earlier or later refill periods depending on snow pack, rainstorms, weather forecasts, and fisheries needs. A resource committee is established that will adaptively manage the refill.

1.8 MONITORING

Adaptive management and monitoring is a critical link to agency and tribal acceptance of regional water supply plans and for implementation of the AWS Project. There are several goals of the fish passage monitoring plan. They include 1) fish facility testing to ensure safe fish passage through the new facility, 2) long term operational monitoring to verify the facility is operating properly at any given time, and 3) reservoir monitoring to verify successful fish passage through the larger reservoir. The facility is also designed to accommodate fish tagging for fisheries management purposes. Fisheries management is not an objective of this monitoring plan. The local resource management agencies, the Washington Department of Fish and Wildlife and the Muckleshoot Tribe, are expected to fund any fish tagging or additional monitoring associated with fisheries management. The detailed monitoring plan can be found in Appendix C. More detailed study plans will be written prior to each element of the monitoring plan.

1.9 GENERAL DESIGN CRITERIA

The following represent over-arching project objectives:

- provide for unrestricted operation of the existing flood control outlet facilities at all pool elevations;
- provide for positive and complete closure of all fish passage facility outlet works during the flood control season, if necessary;
- ensure that the existing spillway discharge characteristics are not adversely affected by construction of the juvenile fish passage facility.
- provide emergency closure capability of all operating conduits within the fish passage outlet works;
- provide for variable elevation withdrawal of near-surface flows under full additional water supply pool elevation operating range for enhanced fish passage success; and
- provide for fish capture and transport within biological criteria for all pool elevations within the existing conservation pool and additional water supply operating range.

More detailed design criteria for specific aspects of the fish passage facility design are cited in the individual chapters.

1.9.1 General Guides and Codes

The following codes are used in the design of the fish passage facility:

General Design:	Minimum Design Loads For Buildings and Other Structures; ANSI/ACE 7-95; American Society of Civil Engineers (ACE)
Bridges:	Standard Specifications for Highway Bridges, 15th Edition with Interim Publications, 1995; American Society of State Highway and Transportation Officials (AASHTO).
Buildings:	ACE 7-98. Minimum Design Loads for Buildings and other Structures. TI 809-04. Seismic Design for Buildings.
Concrete:	Building Code Requirements for Structural Concrete, ACI 318-95; American Concrete Institute (ACI).
Reinforcing Steel:	Specification A615, latest revision; American Society for Testing and Materials (ASTM).
Structural Steel:	Steel Construction Manual, Allowable Stress Design, 9th Edition, 1989; American Institute of Steel Construction (AISC).
Other metals:	Various specifications, latest revision; American Society for Testing and Materials.
Welding:	Structural Welding Code-Steel, D1.1; American Welding Society (AWS).

1.9.2 Corps of Engineers Guidance Documents

The following publications of the Corps are used in the design of the fish passage facility:

USACE, 1983. Design Memorandum Supplement No. 26; Earthquake Analysis of Howard A. Hanson Dam; September 1983.

USACE, 1996. Howard A. Hanson Dam Additional Water Storage Project Feasibility Report; Appendix E: Fish Passage Facility and Reservoir Slope Stability Geotechnical Report; 02 August 1996.

USACE, 1983. Seismic Design and Evaluation of Intake Towers, ETL 1110-2-339; 31 March 1993.

USACE, 1990. Howard Hanson Dam Fish Passage Technical Committee; Howard A. Hanson Dam Fish Passage Alternatives for Proposed New Operating Rule Curve; November 1990.

USACE, 1998. Technical Instruction, Load Assumptions for Buildings, TI 809-01, Headquarters US Army Corps of Engineers; 3 August 1998.

USACE, 1995. Ecosystem Restoration in Civil Works Programs (Draft), EC 1165-2-201; 1 June, 1995.

USACE, 1980. EM 1110-2-1602, Hydraulic Design of Reservoir Outlet Works. Department of the Army. 15 October 1980.

USACE, revised 1987. Hydraulic Design Criteria. Corps of Engineers Civil Works Investigations – Hydraulics, Item CW 804. US Army Engineer Waterways Experiment Station, Vicksburg, Mississippi, USA.

USACE, 1991. EM 1110-2-1601, Hydraulic Design of Flood Control Channels. Department of the Army. 1 July 1991.

USACE, 2000. EM 1110-2-2702, Design of Spillway Tainter Gates: Department of the Army. 1 January 2000.

1.9.3 Structural Loads

Refer to Chapter 7.

1.9.4 Soil and Rock Parameters

Details of the soil and rock mass characteristics and engineering properties of soil and rock in the vicinity of the proposed fish passage facility can be found in the project Geotechnical Baseline Report (GBR) included as Appendix B.

1.9.5 Hydraulic Design

There are two basic design considerations for hydraulic features of the proposed structures. The first objective was to develop an acceptable hydraulic design, and the second was to develop the most economically feasible and fish-friendly fish passage facility for downstream migrant anadromous fish. The fish passage system needed to meet operating conditions at HHD required by the Fish Passage Technical Committee (FPTC) to help resolve issues and develop an acceptable fish passage design for the project. The FPTC met throughout the course of the design process to review updated designs and recommend changes to better meet requirements of the project. Specific hydraulic and biological design criteria and guidance are discussed in Chapter 5, Hydraulic Design. The general fish passage facility hydraulic design satisfies the hydraulic criteria set forth in the following USACE guidance:

USACE, 1980. EM 1110-2-1602, Hydraulic Design of Reservoir Outlet Works. Department of the Army. 15 October 1980.

USACE, revised 1987. Hydraulic Design Criteria. Corps of Engineers Civil Works Investigations – Hydraulics, Item CW 804. US Army Engineer Waterways Experiment Station, Vicksburg, Mississippi, USA.

USACE, 1991. EM 1110-2-1601, Hydraulic Design of Flood Control Channels. Department of the Army. 1 July 1991.

USACE, 2000. EM 1110-2-2702, Design of Spillway Tainter Gates: Department of the Army. 1 January 2000.

1.10 REFERENCES

Brett, J.R. and D.F. Alderdice. 1958. Research on guiding young salmon at British Columbia field stations. Journal of Fisheries Research Board of Canada Bulletin 117.

Haro, A., M. Odeh, J. Noreika, and T. Castro-Santos. 1998. Effect of water acceleration on downstream migratory behavior and passage of Atlantic salmon smolts and juvenile American shad at surface bypasses. Transactions of the American Fisheries Society 127: 118-127.

Johnson, R.L., G.E. Johnson, S.M. Anglea, S.L. Blanton, M.A. Simmons, S. Thorsten, E.A. Kudera, J.R. Skalski, and J. Thomas. 1998. Fixed location hydroacoustic evaluation of the prototype surface bypass structures at Lower Granite Dam. Report to the U.S. Army Corps of Engineers, Walla Walla, Washington, Contract DACW68-96-D0002, 103 p. (Available from Battelle's Northwest Pacific Division, P.O. Box 999, Richland, WA 99352.)

National Marine Fisheries Service. 2000. White Paper: Passage of Juvenile and Adult Salmonids Past Columbia and Snake River Dams. Northwest Fisheries Science Center, National Oceanic and Atmospheric Administration, Seattle, Washington.

Figure 1-1. Vicinity and Area Maps

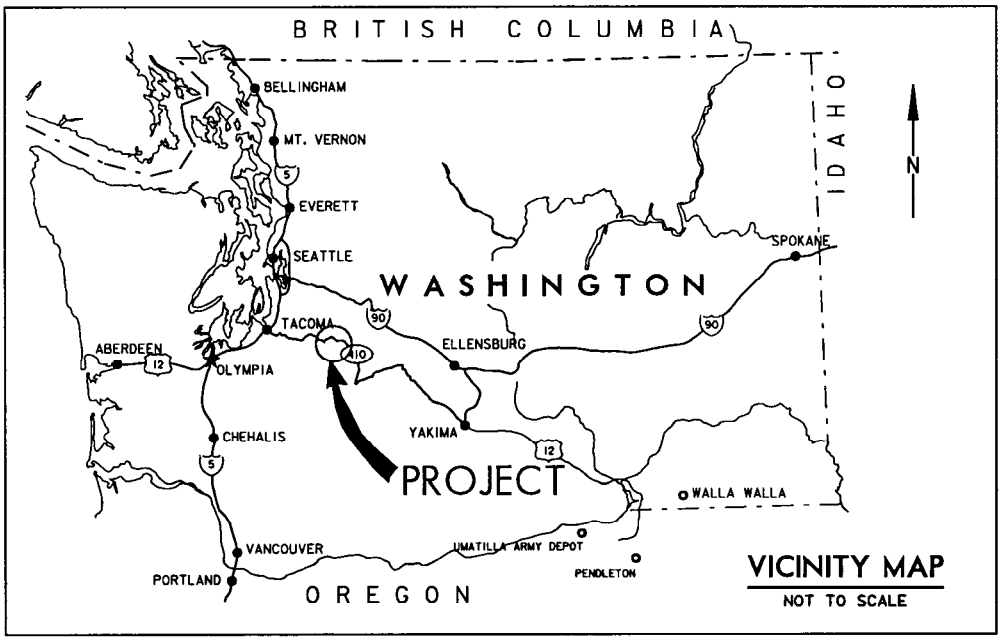

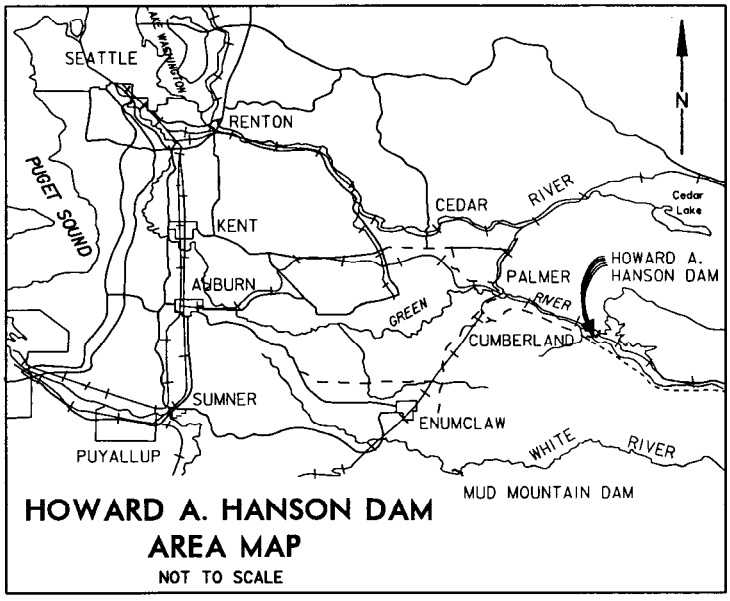

Figure 1-2. Topographic Location, Howard A. Hanson Dam Project

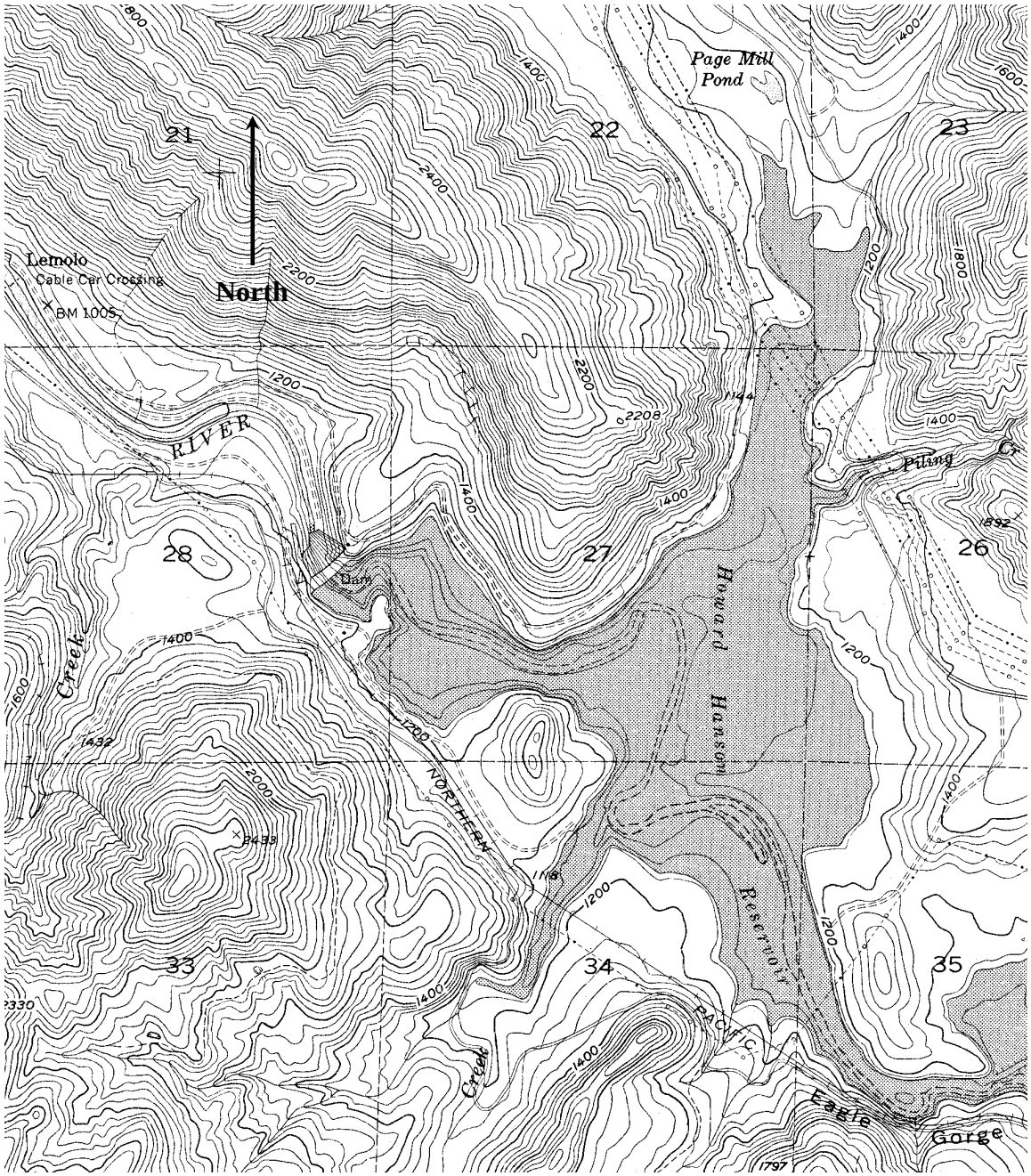

Figure 1-3. Project Site Map

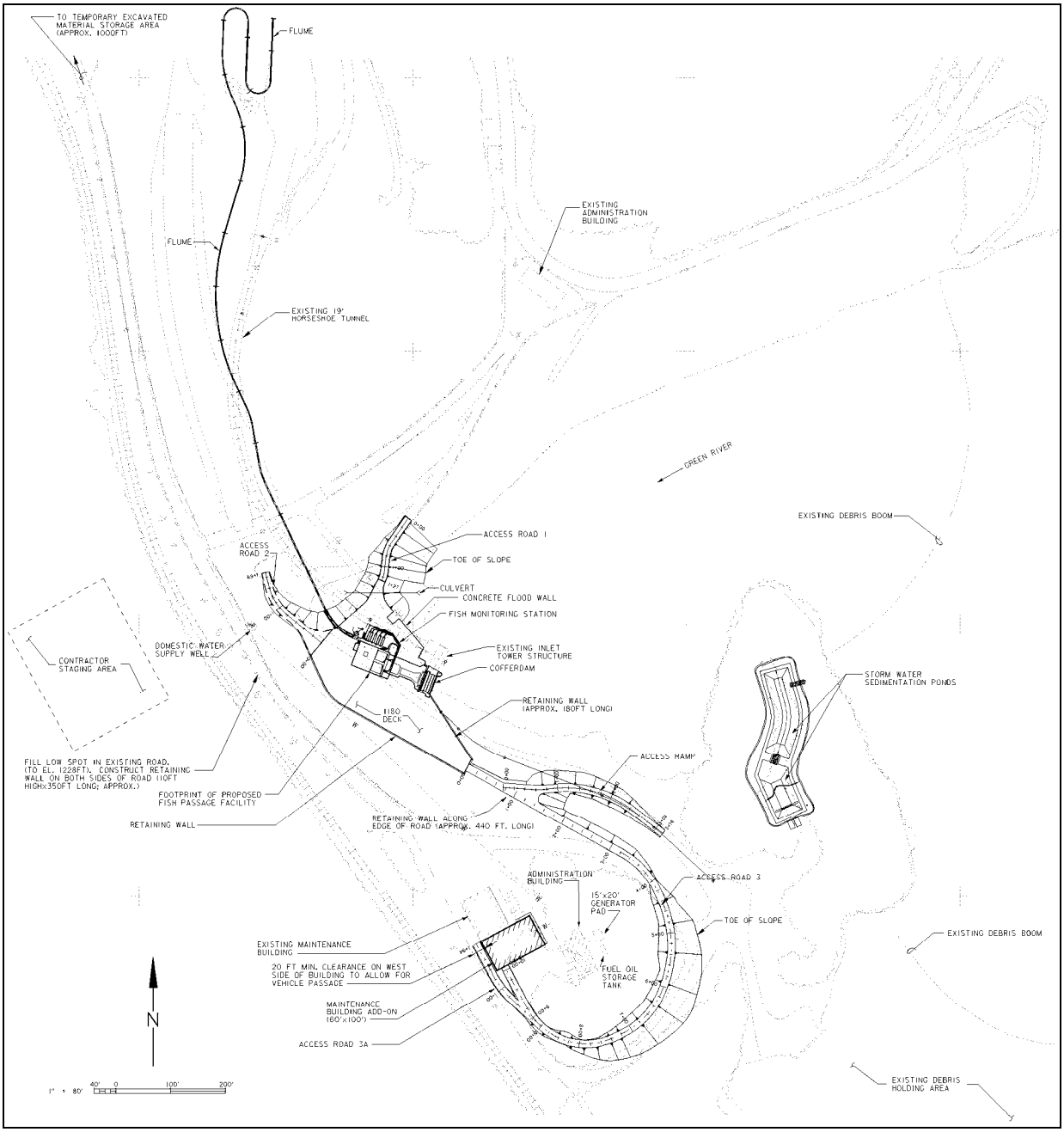

Figure 1-4. Longitudinal section of Fish Passage Facility

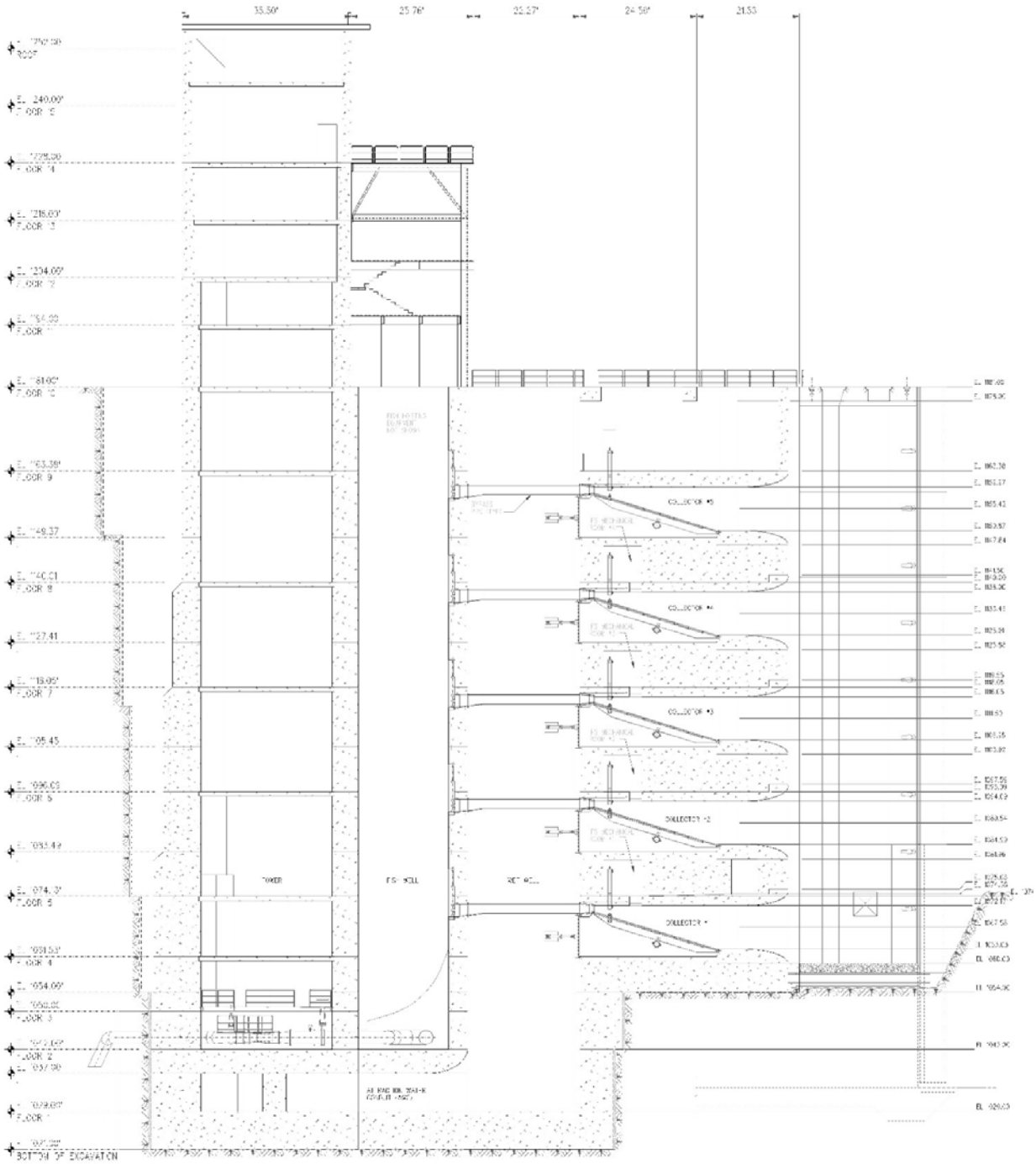

Figure 1-5. Fish Passage Facility Plan – el. 1181 feet (Monitoring Station, Flumes and Fish Hoisting Equipment not shown)

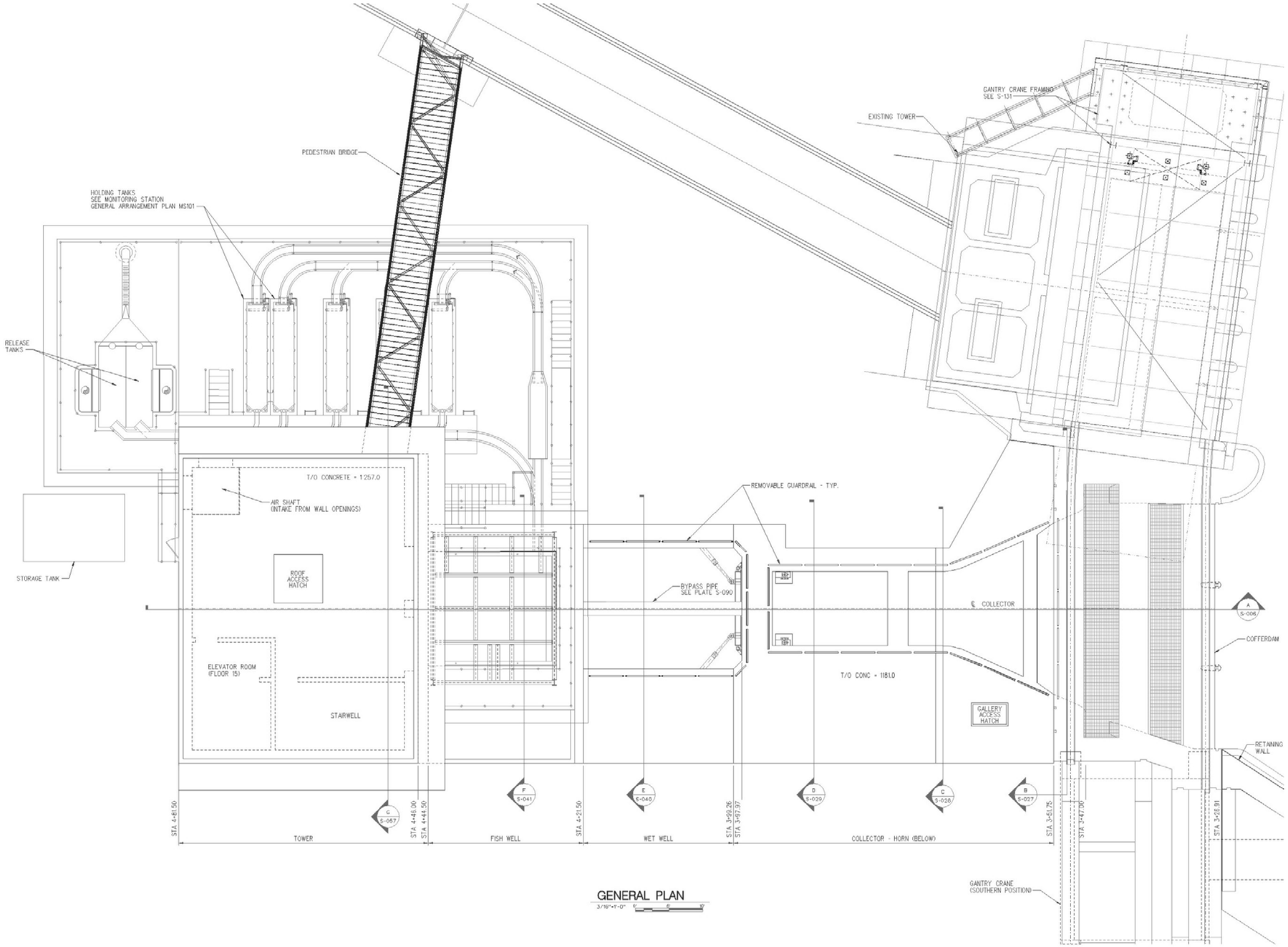

This page intentionally blank.

Figure 1-6. Three-dimensional view of intake structure

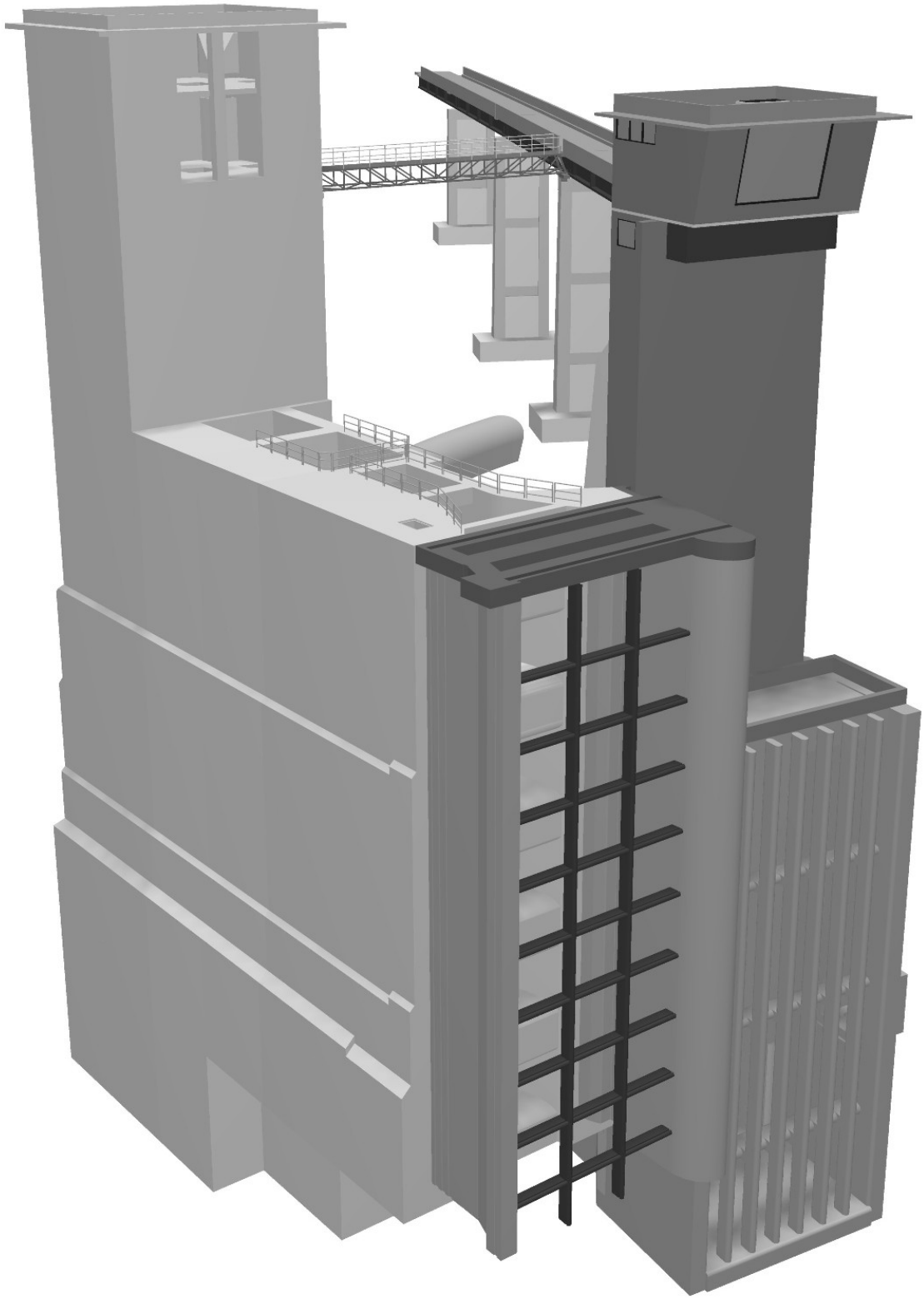

CHAPTER 2 HYDROLOGIC ANALYSES

2.1 WATER MANAGEMENT - GENERAL

A chronology of events affecting the quantity and measurement of stream flow in the Green River was compiled in a report titled, *Hydrologic Summary for the Green River Restoration Reconnaissance Report*. Table 2-1 lists pertinent events.

TABLE 2-1. CHRONOLOGY OF EVENTS AFFECTING STREAM FLOW

Date	Stream flow Event
1913	Diversion by City of Tacoma for water supply, initially 31 cfs, expanded to 113 cfs as City grew.
Oct. 1931	Begin record of streamgage, "Green River near Palmer."
1933	Tacoma registered a water right claim for 400 cfs from Green River.
Aug. 1936	Begin record of streamgage, "Green River near Auburn."
Oct. 1961	Begin record of streamgage, "Green River below Howard A. Hanson Dam."
Dec. 1961	Begin record of streamgage, "Howard A. Hanson Reservoir near Palmer."
Dec. 1961	Begin flood control & conservation storage operation of HHD.
June 1963	End record of streamgage, "Green River near Palmer."
July 1963	Begin record of streamgage, "Green River at Purification Plant near Palmer."
1977	Tacoma completes well field in North Fork valley that can pump 113 cfs.
April 1980	Washington State establishes instream flows at Palmer and Auburn.
July 1995	Establishment of Tacoma and Muckleshoot Agreement for diversion & flows.
March 1996	Environmental Assessment of Sec. 1135 F&W Restoration at HHD

The following discussion relates some significant historical changes to measurement of stream flows on the Green River with regard to the Additional Water Storage (AWS) Project.

2.2 EXISTING WATER SUPPLY DIVERSION

The main source of water for the City of Tacoma is the Green River. Diversion of water from this source began in year 1913 at a rate of about 31 cfs. Tacoma Water Division has expanded the diversion according to need so that, by 1955, approximately 113 cfs was being diverted. The diversion takes place about 30 miles east of Tacoma near Palmer, 3.5 miles downstream of Howard Hanson Dam. The drainage area tributary to the intake point encompasses 231 square miles. Surface water is diverted from the Green River by means of a concrete dam 17 feet high and 152 feet long. The intake structure at the north end of the dam carries water through a short tunnel into a settling basin. From the basin, water is conducted by gravity through the transmission line to McMillin Reservoir near Puyallup and then into the city.

Two well systems contribute to this system. One of these, the In-City well field in south Tacoma, is principally used for peaking purposes. The other, along the North Fork of the Green River, is used when turbidity conditions in the Green River make the water unacceptable for consumption. The only treatment given Green River water is disinfection. Water filtration is not required due to the availability of high quality water with low turbidity from the protected watershed.

2.3 STREAM FLOW MEASUREMENTS

Green River stream flows below the dam are measured at three locations. The first streamgage is 0.7 miles downstream where the drainage area increases from 220 square miles (at the dam) to 221 square miles. This streamgage is used in water management as the outflow from the reservoir. The period of record for stream measurements started in October 1960. The next streamgage is 4.1 miles downstream from the dam where the drainage area is 231 square miles. This gage is significant because it is 0.7 miles downstream of Tacoma's diversion dam and measures the instream flow after diversion. Stream measurements began at this site near Palmer in July 1963. Prior to July 1963, the gage was at a site 1.8 miles upstream where it measured flow above the diversion since October 1931. The next and last location of stream flow measurement on the main stem is 32.5 miles below the dam near Auburn where the drainage area is 399 square miles (1.8 times the drainage basin size at the dam). Table 2-2 provides the locations of the streamgages.

TABLE 2-2. STREAMGAGE LOCATIONS AND AVERAGE DISCHARGE

Location	River Mile	Square Mile Area	Average Discharge (cfs)	Avg. Discharge per Sq. Mi. (cfs)
H.A. Hanson Reservoir near Palmer	64.5	220	n/a	
below H.A. Hanson Reservoir	63.8	221	1008	4.6
at Purification Plant, near Palmer (near diversion site)	60.3	231	1067	4.6
Newaukum Creek near Black Diamond	0.8	27.4	60.4	2.2
Big Soos Creek near Auburn	0.9	66.7	126	1.9
Green River near Auburn	32	399	1439	3.6

2.4 TACOMA WELLS

Tacoma completed the installation of a well field along the North Fork of the Green River in 1977. When turbidity levels on the Green River exceed 5 NTU (Nephelometric Turbidity Units), the surface supply is supplemented or diluted by the North Fork well supply. The well field consists of six wells spaced between 250 and 300 feet apart. The North Fork well field is hydraulically connected to the river. Tacoma's instantaneous withdrawal from the combination of North Fork wells and the Green River

may not exceed 113 cfs. Details on well operation are beyond the scope of this report, but can be found in Tacoma's reports on their Water System Plan.

2.5 WASHINGTON STATE INSTREAM FLOWS

In April 1980, the State of Washington Department of Ecology established administrative rules and instream flows at both the Palmer and Auburn gages (Table 2-3) according to their Instream Resources Protection Program for the Green-Duwamish River Basin. Future water right holders subject to regulation will not be allowed to continue diversion when flows fall below the instream flows. This also applies to diversion of natural flow at HHD reservoir to storage under future water rights.

The instream flows provide varying degrees of protection levels. Instream flow hydrographs have been developed for two locations in the Green River Basin (Table 2-4). Normal and critical year curves are supplied for the Palmer station only. They are intended to apply to the proposed future release schedule of HHD to the extent practically and legally possible and an additional water supply diversion proposed by the City of Tacoma. Management of the normal and critical year curves will be the responsibility of the director or his designee, and violation of these flows or levels will only be allowed if overriding public interest will be served.

The presence of HHD on the Green River creates potential opportunity for additional future stored water and future water rights. The instream flow program recognizes that impoundment of surface waters in HHD reservoir is an available means of appropriating additional water resources in the Green River basin. Though the dam is a federal project and is exempt from state control, the use of stored waters is subject to the state's authority in issuing water rights. A secondary application will be required for parties applying for beneficial use of water stored in a reservoir. Such a secondary application must refer to the reservoir as its source of water supply and show documentary evidence that an agreement has been reached with the owners of the reservoir to impound enough water for the purposes of the application.

TABLE 2-3. INSTREAM FLOW CONTROL LOCATIONS

Control Location	USGS Gage Number	River Mile	Stream Management Reach
Green River near Auburn	12113000	32.0	From influence of mean annual high tide at low instream flow levels (approximately River Mile 11.0) to USGS Gage #12106700
Green River near Palmer	12106700	60.4	From USGS Gage #12106700 to headwaters.

TABLE 2-4. INSTREAM FLOWS FOR FUTURE WATER RIGHTS IN THE GREEN RIVER BASIN

Month	Day	12113000 Normal Year Green River near Auburn	12106700 Normal Year Green River near Palmer	12106700 Critical Year Green River near Palmer
Jan.	1	650	300	300
	15	650	300	300
Feb.	1	650	300	300
	15	650	300	300
Mar.	1	650	300	300
	15	650	300	300
Apr.	1	650	300	300
	15	650	300	300
May	1	650	300	300
	15	650	300	300
June	1	650	300	300
	15	650	300	210
July	1	550	150	150
	15	300	150	150
Aug.	1	300	150	150
	15	300	150	150
Sept.	1	300	150	150
	15	300	150	150
Oct.	1	300	190	150
	15	350	240	150
Nov.	1	550	300	190
	15	550	300	240
Dec.	1	650	300	300
	15	650	300	300

2.6 AGREEMENT BETWEEN MUCKLESHOOT INDIAN TRIBE AND TACOMA

In 1995, a written agreement was reached between the Muckleshoot Indian Tribe and the City of Tacoma regarding the Green/Duwamish river system. The Muckleshoots are a federally recognized Indian tribe with rights and responsibilities for the management of fish and wildlife resources and other natural resources of the Green/Duwamish river system. The City of Tacoma is the owner and operator of the municipal water system downstream of HHD through its Department of Public Utilities, Water Division. The agreement settles Muckleshoot claims against Tacoma arising out of Tacoma's municipal water supply operations on the Green River, including Tacoma's First and Second Supply Water Right diversions. The agreement establishes the commitment and framework for a long term cooperative working relationship between the Muckleshoot Indian Tribe and Tacoma concerning the Green River. The Corps is not a party to the agreement; however, the Corps considers the instream flow requirements and other conditions of the Green River during its water management operations.

Tacoma will constrain water withdrawals under its First Diversion Water Right to provide guaranteed minimum continuous instream flows during the period July 15 to the end of flow augmentation from HHD at the Auburn USGS gage as defined by weather conditions during the summer months (Table 2-5). The determination of wet, average, dry, and drought weather conditions is aided by the use of reference zones within HHD reservoir that show available storage by date. The tabulation of the zones is too detailed for presentation in this report and is available in the Water Management Section of the Corps' Seattle District office. Before a decision is made to drop the instream flows from 250 to 225 cfs, consultation among the resource agencies, Muckleshoot Indian Tribe, Corps of Engineers, and Tacoma will explore alternatives to lowering the minimum continuous instream flow.

TABLE 2-5 AUBURN INSTREAM FLOW BY WEATHER CONDITION

Summer Weather Condition	Auburn Instream Flow
Wet Years	350 cfs
Wet to Average Years	300 cfs
Average to Dry Years	250 cfs
Drought Years	250 to 225 cfs depending on the severity of the drought

Tacoma will meet the continuous instream flow requirements at Auburn and Palmer (Tables 2-6 and 2-7) whenever it is withdrawing water from the Green River with its Second Supply Water Right (SSWR) diversion. Tacoma's exercise of its SSWR will be constrained by the minimum flow requirements identified in Tables 2-6 and 2-7 or by the minimum flows prescribed by the State (Table 2-4), whichever are greater.

TABLE 2-6. PALMER INSTREAM FLOW BY SEASON

Season by Dates	Palmer Instream Flow
July 15 to September 15	200 cfs
September 16 to October 31	300 cfs
November 1 to July 14	300 cfs

TABLE 2-7. AUBURN INSTREAM FLOW BY SEASON

Season by Dates	Auburn Instream Flow
July 15 to September 15	400 cfs
September 16 to July 14	N/A (defaults to values in Table 2-4)

The agreement acknowledges that the operation of HHD for fish conservation is designed to protect against a drought that has a probability of occurrence of once in 50 years. While maintaining that standard, the parties agree that the operations should be modified during the summer to provide additional flows in the Green River for fish. Tacoma agrees that if the Corps modifies existing operations of HHD to

release more water during the summer months and if fall precipitation does not occur in sufficient quantities to meet the instream flow requirements of the MIT/Tacoma agreement, Tacoma will restrict its withdrawals of water from the Green River by its First Diversion to allow the Corps to recoup water required to maintain its federally mandated minimum instream flows. Tacoma may rely on its well capacity to meet its demand requirements during the period it restricts its Green River withdrawals.

The "Agreement between the Muckleshoot Indian Tribe and the City of Tacoma Regarding the Green/Duwamish River System (MIT and TPU Agreement)" is one of the last steps before construction starts on Tacoma's SSWR diversion Pipeline No. 5. The SSWR diversion pipeline is not part of the AWS Project; it becomes part of the baseline conditions. The MIT and TPU Agreement provides an elaborate set of rules and conditions that must be met before water can be diverted to the SSWR diversion pipeline. The MIT and TPU Agreement also includes special conditions to use groundwater withdrawal as a trade-off for withdrawal by the first diversion pipeline according to seasonal operating zones defined for HHD reservoir. The MIT and TPU Agreement exists outside the realm of the Additional Water Storage Project; it does not specify any release of stored water at HHD reservoir. The agreement does mention that Tacoma will pursue the sponsorship of approximately 5,000 ac-ft for low-flow augmentation during drought years.

2.7 SECTION 1135 RESTORATION STORAGE

The Environmental Assessment of the Section 1135 Fish and Wildlife Restoration Project was in a preliminary draft form as of September 1997. This restoration project includes a modification of HHD storage operations with the intermittent addition of 5,000 ac-ft to its conservation storage during years of low snow pack, estimated to occur approximately once every 5 years. The extra storage is included in some of the provisions of the Muckleshoot and Tacoma Agreement.

All of the features listed above are considered "existing conditions" just prior to the implementation of the additional storage and its operating conditions. Instream flows observed in the past are not existing conditions because they do not include diversions to the SSWR pipeline and restoration flows provided by the additional 5,000 ac-ft of storage. A detailed description of the Green River system operation that includes the MIT and TPU Agreement and Section 1135 Restoration Project is to be provided by Tacoma's engineering consultant.

2.8 FLOOD CONTROL

Storage of up to 106,000 ac-ft (up to pool el. 1206 feet) is allocated for flood control from approximately October through February or early March. This is the same flood control space as described in the original project description. Space requirements during the transition months, October and late February/early March, are evaluated during real-time conditions to determine the imperative of providing 100 percent of the flood control allocation. The reservoir is kept as low as possible during the flood season so that runoff from the Green River watershed above the dam can be impounded to keep the discharge at Auburn below 12,000 cfs. Flood control storage space is not needed outside of the late fall/winter period because the river channel is adequate to handle runoff during this period. The flood

control zone is illustrated in Figure 2-1. The curves enclose the upper boundary of space required for flood control on the Green River. The actual slope of the October-through-December curve is variable, depending on the duration of the low-flow season and the onset of fall rain.

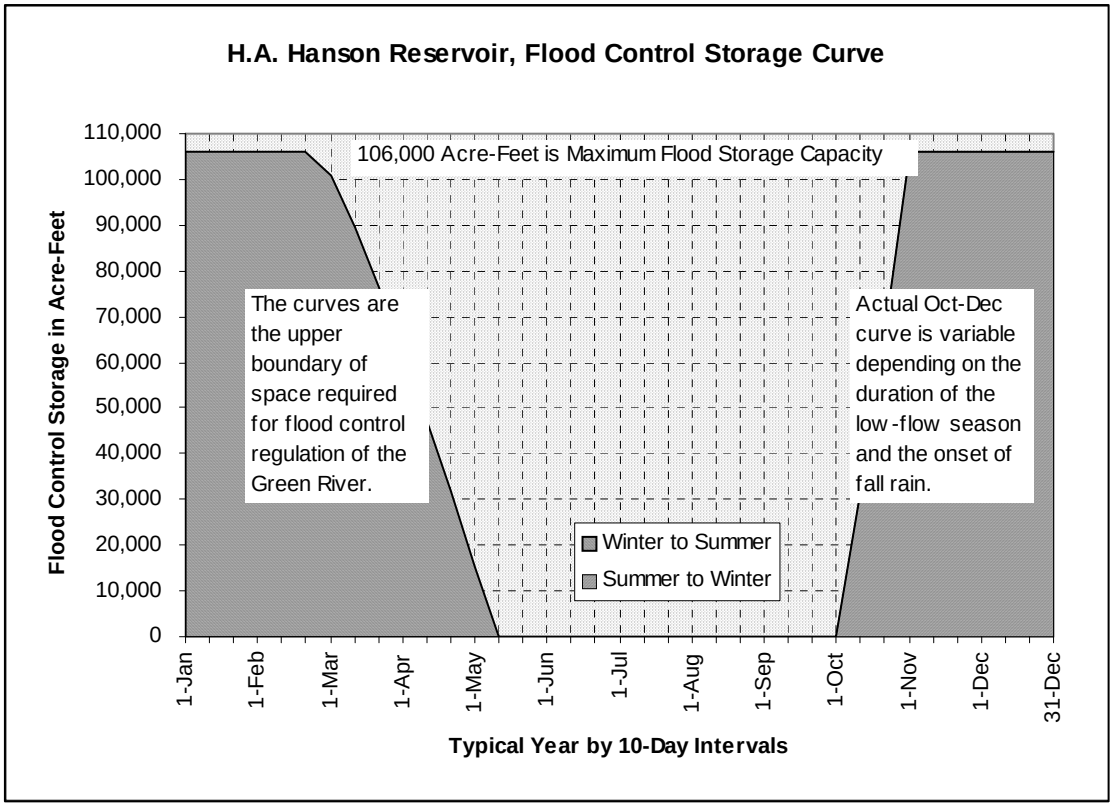

Figure 2-1. Flood Control Storage Curve for Howard A. Hanson Dam Reservoir

Water control during construction of the AWS Project will present unique challenges due to the added constraint of needing to meet the variable and often changing needs of construction in addition to the need to meet existing water management objectives (i.e., flood control, conservation pool management). Communication and coordination between the Water Management Section, operations personnel, and construction representatives will occur at least daily as needed to ensure that critical information such as weather forecasts, expected reservoir inflows, planned construction activities and planned reservoir operations are shared and discussed. Communication and coordination are expected to be especially critical during the late fall and winter of 2005-2006 when a low reservoir elevation (1,075 to 1,080 feet) will be needed to facilitate construction of a coffer dam to assist with the construction of the fish passage facility. During this period, the Reservoir Control Center (RCC) will be staffed during off-hours as needed to help maintain a low reservoir elevation to facilitate construction activities. Because one of the primary authorizations of Howard Hanson dam is to provide flood control, it is anticipated that the project will be required to provide flood control periodically during construction. In these instances, the Water Management Section will provide as much notification as possible to the Corps' construction representatives to allow them to work with the contractor to coordinate evacuation of equipment and prepare the construction site as needed for possible inundation. Aside from flood control operations, there will also be occasions when the reservoir inadvertently rises above the critical construction elevation due to the extreme difficulty in maintaining a low reservoir elevation during the late fall/winter season. In

these instances, advance notification will be provided to the Corps' construction representatives as feasible to allow them to coordinate evacuation of equipment and to prepare the site as needed for possible inundation.

CHAPTER 3 FISHERIES

3.1 GENERAL

The purpose of the Howard Hanson Dam (HHD) fish facility is to provide downstream fish passage at Howard Hanson Dam which is at river mile (RM) 64.5 of the Green River, Washington. Upstream fish passage will occur via a trap and haul constructed at the Tacoma diversion dam at RM 61 (Figure 3.1). Downstream fish passage is complicated by flood control and water storage project authorities that result in a reservoir that varies in elevation by nearly 100 ft over the course of a year. During the winter flood control season generally from the end of October until the end of February, a minimal reservoir is held at the dam. The reservoir elevation during this time is typically below 1080 ft except during a flood. Fish passage below this reservoir elevation is generally considered to be satisfactory through the existing flood control tunnel. Limited testing with juvenile steelhead in 2008 has confirmed this assumption. Beginning around the end of February , water storage begins and the reservoir begins to fill. The reservoir elevation typically reaches 1080 ft by the first week of March on its way up to 1167 ft which is achieved is generally reached around June 1 (Figure 3.2). Phase 2 of the Additional Water Storage Project would result in a maximum reservoir elevation of 1177 ft. It is currently uncertain whether phase 2 will be implemented. The fish facility is designed to begin operation when the reservoir is above 1080 ft and is therefore expected to operate from approximately March 1 until the end of October.

3.2 GREEN RIVER FISHERIES

The primary anadromous fish species in the Green River are steelhead, Chinook, coho, chum, and pink salmon. A few sockeye salmon and bull trout can also be found. Bull trout are occasionally caught in the river, but there is no documented bull trout spawning in the Green River watershed. Anadromous cutthroat trout are also likely. The primary resident species expected at the HHD fish facility are cutthroat trout, rainbow trout, and mountain whitefish (Corps, unpublished data). Table 3.1 lists fish species that have been found in the Green River (R2 2004, Masuda, et al. 1968, USFS 1996, and Wunderlich and Toal 1992).

In recent years, pink salmon have been the most abundant anadromous species in the river. The pink salmon population is an odd year run and has seen a dramatic increase in recent years from very few in 2001 to about 1 million escapement in 2007. Chinook salmon escapement goal is 5,800 fish. In 2006, the total escapement estimate was 10,157. This was at the higher end of the escapement range for the last 20 years. In 2008, Chinook escapement was 5,971 (WDFW 2008). Since 1990, the escapement goal has been reached in all but four years (Paul Hage 2009). There is both a winter and summer run steelhead run in the Green River. The summer run is thought to be entirely hatchery supported. The winter run

escapement goal is 2,000 fish. Since 1990, this goal has been achieved only five years (WDFW 2008). The 2008 escapement was 833.

Anadromous fish were isolated from the upper Green River after completion of the Tacoma diversion dam in 1913. Beginning in the early 1980's, hatchery coho, and Chinook salmon were planted above HHD. The final year of these efforts was 2006. In addition, small numbers of juvenile and adult steelhead were planted above HHD in the early 1990's. Steelhead numbers ranged from 22 to 133 adults. In 2007, approximately 1,400 adult pink salmon were transported above HHD to test the upstream trap and haul completed at the Tacoma diversion dam. In 2008, approximately 60 adult coho salmon were transported upstream to study their migration through the reservoir. The downstream success and timing of progeny from the adults transported upstream is not known. Juvenile pink salmon were identified in the reservoir at HHD beginning in April 2007 (Corps, unpublished data).

3.2.1 Upper Green River habitat

The Upper Green River watershed above HHD consists of 220 square miles of potential habitat. This is about 45% of the total Green River watershed area. The recovery goal for Chinook salmon established by the Final WRIA 9 Salmon Habitat Plan (August 2005) is 27,000 spawning adults in the Green River. The HHD fish facility is an integral component of this recovery strategy

An analysis presented in the project Feasibility Report and Environmental Impact Statement (FR) calculated a total of 106 accessible stream miles above the dam that was potentially useable by steelhead, coho, and Chinook salmon. FR estimates for smolt production and adult escapement in the upper Green River Watershed are:

	Smolts	**Adult Escapement**
Coho	161,705	6,468
Steelhead	25,257	1,339
Fall Chinook	890,000	2,277
Spring Chinook	279,971	1,342

Historical estimates for production from the upper watershed range from 9,000 – 25,000 coho, 500 – 5,200 steelhead, and 150 - 300 spring Chinook (Grete and Salo 1986). Between 1911 and 1914, fish were trapped immediately below the newly constructed Tacoma diversion dam. The average return for coho during these years was 5,600 fish. The average steelhead return was 1,699 fish.

3.2.2 Juvenile downstream migration

Several studies were conducted in the early and mid-1990's evaluating juvenile migration through HHD reservoir and passage through the dam. Since this work evaluated hatchery fish planted above the dam, it is not expected to be indicative of the timing of naturally produced fish. This data will therefore not be detailed here, but can be found in the FR. One notable observation from this work was large

numbers of juvenile fish moving downstream through the dam in the fall. Juvenile salmon were also consistently collected in the Tacoma water diversion in the fall. This is likely the result of migration delay related to the reservoir and low level outlet, and/or the lowering of the reservoir in the fall. It is uncertain if this will be observed after the new fish facility is constructed. If significant juvenile rearing occurs in the reservoir, there may be a significant amount of fish passage occurring in the fall as the reservoir is drawn down.

The timing of the juvenile downstream migration through HHD reservoir can be approximated based on migration patterns in the lower river. A screw trap has been installed in the Green River at RM 34.5 annually since 2000. Timing in the upper river is expected to be similar to this or slightly later due to colder incubation temperatures.

Screw trap data from the lower river generally indicates a bimodal migration pattern for juvenile Chinook that extends from February or sooner until July (Figure 3.3). Juvenile Chinook have been observed in the estuary as early as January.

Juvenile coho numbers are generally low until about mid-April when the catch noticeably increases. The peak is generally in early May and then declines noticeably by the end of May. A noticeable bump in coho generally occurs in February. This has been attributed ti with-basin movement prior to smoltification (WDFW 2003).

Juvenile rainbow trout/steelhead are generally captured at the screw trap from January until the end of June. Peaks have been observed at the end of January/early February and end of April to end of May (Figure 3.4).

As a result of pink salmon being transported above HHD in fall 2007, juvenile pink salmon were observed in the HHD reservoir in spring 2008. Pink salmon began appearing by the last week of April. This timing is slightly later than that observed for pink salmon at the RM 34.5 screw trap in 2006 and 2004 (Figure 3.5).

3.3 FISH PASSAGE OBJECTIVES

Fish Guidance Efficiency (FGE) is defined by the project Biological Opinion (BO) from the National Marine Fisheries Service (NMFS) as the proportion of migrating fish entering the reservoir that are safely and effectively passed around the dam. The estimated FGE for the combined HHD and reservoir is 86% for juvenile coho, 88% for steelhead, and 64% for Chinook salmon. These are project objectives for fish passage established in the BO. The objective stated in the FR is to develop self-sustaining runs of these species above the reservoir. In addition to the fish facility, additional habitat measures such as wood debris islands have been constructed in the reservoir to increase juvenile fish refuge areas with the objective of improving survival through the reservoir.

As stated in the FR, “The goal of the proposed fish facility is to allow a 95% survival rate of juveniles migrating through it.” This number is a target for passage through the fish facility itself and is considered a general target by NMFS for fish passage facilities. This number is separate from the FGE numbers identified above.

Additional parameters important to meeting the above objectives include:

- Minimizing juvenile outmigrant delay in the reservoir and facility forebay
- Minimizing the rate of refill and thereby maximizing reservoir velocities during the juvenile outmigration
- Regulating reservoir and downstream water temperature to match inflow temperature.

3.4 DOWNSTREAM FISH FACILITY OPERATION

3.4.1 Fishing Season

The fish facility is designed to provide downstream fish passage when reservoir elevations are above 1080 ft between the end of February and the end of October. The period from November 1 to the end of February is considered flood control season, and the reservoir is generally held below 1080 ft to provide flood storage. Below 1080 ft, it is assumed fish passage will occur successfully through the existing 18 ft flood control tunnel (FPTC 1990). This will be confirmed through additional study. There are two scenarios where fish passage is not likely to occur, 1) during the flood control season when the fish facility is offline and high flows push the reservoir above 1080 ft, and 2) during the fish passage season when the fish facility is online and inflow is greater than 4,000 cfs. A 4,000 cfs inflow is a critical threshold that marks a transition from fish facility operation to flood control operation that may occur during the early spring.

During the flood control season, certain sensitive equipment (electronics, PIT tag readers, etc.) will be removed and stored at a secure location so that damage is not incurred during a flood. The facility will be reassembled at the end of February when water storage begins and flood season has passed.

The fish facility is expected to be staffed 20 hrs per day during the juvenile outmigration period which is anticipated to be March through July. This will include 2 operations technicians to manage bulkheads and hoist, 2 fisheries technicians to monitor and transport fish, and 1-2 fish truck drivers. There will be 2 x 10 hr shifts per day, 7 days per week. Outside of the March to July period, staffing will be reduced to 1 x 8/10 hr shift per day 7 days/week. In addition there will be 1 FTE fish biologist to oversee fisheries activity, conduct monitoring, coordinate with the fishery co-managers and Tacoma, and write annual monitoring reports. Staffing is expected to vary somewhat from this preliminary plan depending on actual fish passage activity and operational experience.

3.4.2 Fish Collection

The fish facility contains a vertical array of five fish collectors that allow for near-surface fish collection as the reservoir rises and falls throughout the year. Each fish collector contains an inclined screen that diverts fish into a bypass pipe and fish well. A 17 ft by 19 ft basket within the fish well is used to hoist fish up to a monitoring station above the main operating deck, from which fish are transported via truck below the dam.

Fish facility operation will begin when the reservoir reaches 1080 ft. This elevation is required to pass 600 cfs through the collector. At lower elevations, the facility can be operated but less flow will pass through the collector. When project discharge is greater than 600 cfs, flow in excess of 600 cfs will be

routed through the existing tunnel. When the reservoir reaches 1100 ft, a second 600 cfs capacity collector becomes available for operation. As the reservoir increases, flow will gradually be shifted to higher collectors. Table 3.2 illustrates reservoir elevations and approximate dates that the various collectors are expected to come on-line. It also describes depths to the various collectors at certain reservoir elevations.

Actual flow through the collector(s) will be dependent on the discharge goal at the time. Discharge is based on inflow, water storage requirements, potential for flood, and fisheries activity. A maximum of two collectors will be operated at any one time for a maximum of 1,200 cfs passed through the fish facility. When outflow is 600 cfs or less, only one collector will be operated. Outflow in excess of 1,200 cfs will be routed through the existing tunnel. Typically the collector(s) nearest the surface will be operated since this is where fish are expected to be. It is possible to operate two non-adjacent collectors. However, this will likely be limited to late summer to address temperature concerns in the downstream river. Actual collector operation will likely be refined somewhat as experience is gained operating the facility and passing fish.

As the reservoir increases and fishing shifts to higher elevations, miter gates will be closed behind the screens of the non-operating collectors. Flow will therefore not occur through a closed collector, but fish will still be able to swim in and out of the screen enclosure area and the bypass.

3.4.3 Incline Fish Screen and Bypass

The bulk of flow through each collector will pass through an incline screen and into a wet well ultimately joining the existing 18 ft tunnel. Between 25 and 35 cfs will be directed to a bypass pipe that leads to the fish well. Fish will be directed by the incline screen into the bypass pipe and fish well. Optimal flow in the bypass will be determined through experience with the facility and monitoring. Important variables include fish capture velocities, fish size, potential injury, and turbulence in the fish well.

At 600 cfs average velocities over the screen are 6 feet/second (fps). At 200 cfs the average velocity is 2 fps. More detail about the screen and screen velocities can be found in chapter 5. The bypass maintains an 8 fps capture velocity at 25 cfs regardless of the total flow into the collector.

Each fish screen will contain multiple viewing portals allowing direct observation of the screen and the bypass entrance. A video camera will be relay images from these portals to the control station and other computers throughout the facility. This data will be used to manage cleaning of the screen and to evaluate the screen for fish injury and effectiveness. Each screen will pivot to allow periodic cleaning.

3.4.4 Fish Well and Hoist

The fish well is one large chamber 17 ft x 19 ft that extends from elevation 1042 ft to 1181 ft. Water elevation in the fish well is dependent on the reservoir elevation. Each of the five bypass pipes from the various collectors empties into the fish well. As the reservoir fills and fishing progresses to higher elevations in the reservoir, slide gates on the fish well side of the bypass are closed. At all times, water elevation in the wet well will be higher than the elevation of an active bypass pipe. There will thus be no waterfall effect into the fish well.

As fish accumulate in the fish well they will be removed by a basket that spans the area of the fish well. The default position of the basket will be at the bottom of the fish well. The basket will be raised when sufficient fish are collected or after a certain period of time has elapsed. The hoist consists of perforated screen/plate and a fish collection tank that holds 96 cu. ft. As fish are hoisted, the angle of the perforated plate directs fish to the holding tank. When the hoist reaches the surface, all fish are contained in the 96 cu. ft. bucket. This bucket mates to a flume directing fish through the monitoring facility.

During a hoist cycle, the collectors and bypass remain operational and fish continue to be collected in the fish well. The hoist is designed so that when it is re-deployed, the screen is in the open position allowing it to pass below any fish in the fish well. The hoist will therefore operate in a manner similar to a dip net. In the event large quantities of fish are collected over a very short time, the hoist will allow only partial fish collection so as not to overcrowd fish in the monitoring station, the hoist bucket, or transport trucks. The 96 cu. ft. hoist tank is designed to hold a maximum of 132 lbs fish. This is a density of 0.2 lbs per gallon. The dip net style hoist also allows flexibility to keep fish in the large volume of the fish well in the event of some mechanical or truck breakdown, and still be able to remove fish safely.

Operation of the hoist will largely be driven by fish density in the in the fish well. Hydroacoustic technology will be used to count fish as they enter the fish well. Transducers will be installed on the fish well wall either directly opposite each bypass entrance or perpendicular to each bypass entrance to the fish well. Equipment will be calibrated to detect fish targets in the immediate vicinity of the bypass entrance so as not to double count fish already present in the fish well. A real-time (every 10-15 minutes) count of fish will be generated that can be used to manage hoist operations. The design cycle time for the hoist is 40 minutes. This is the quickest fish can be removed from the fish well.

3.4.5 Monitoring Facility

All fish collected in the fish facility will pass through the monitoring facility. Fish are emptied from the hoist into a flume that can be set to bypass all fish directly to the truck holding tank or fish can be diverted to holding tanks for monitoring. Additional detail about the monitoring facility can be found in chapter 12.

The primary purpose of the monitoring facility is to verify that the fish facility is passing fish safely. Fish will be evaluated for injury to verify that 1) the facility initially passes fish safely downstream, and 2) that ongoing operations continue to pass fish safely. Any injuries detected will feedback to operating conditions and a system check to identify and remedy the problem.

The facility is designed to accommodate fish tagging for fisheries management purposes. Fisheries management is not an explicit objective of the Corps or project monitoring plan. The local co-managers are expected to fund any fish tagging or additional monitoring associated with fisheries management.

Fish will be separated by size when the flume system is set to route from the hoist to the monitoring facility holding tanks. Since fish may be kept in holding tanks for some period of time (hours to days) for monitoring purposes, it is desirable to separate out adult predators and to further separate smolts and fry to decrease stress. Separation may further be used to isolate adult fallbacks that might then

be taken back upstream instead of trucked below the dam. The facility includes a direct bypass to the truck that has no fish separation.

Fish facility troubleshooting protocol:

It is expected that debris may become lodged in certain locations of the facility that could lead to fish injury. Mechanical or other facility problems may also occur that could result in fish injury. The facility design contains a certain amount of flexibility to address such problems without stopping fish passage. Fish will periodically be inspected at the monitoring facility to ensure safe fish passage. The troubleshooting protocol will be used to investigate and eliminate the source of injury. This protocol will likely be modified after some experience with operating the facility.

If fish injury is detected, the following stepwise protocol will be followed to identify and remedy the problem:

1. Visually inspect the fish hoist and flume apparatus downstream of the hoist for debris and other sources of potential fish injury.

2. Visually inspect the incline screen through viewing portal(s) and/or rotate incline screen to clean.

3. If debris has accumulated at the bypass pipe, operations will be modified to dislodge this debris. This may include increasing/decreasing flow through the bypass up to 35 cfs, or backflushing the bypass by decreasing fish well outflows and lowering the wet well elevation.

4. If currently operating one collector, **s**witch flow through a different collector.

5. If currently operating two collectors, switch operation to a single collector and the flood control tunnel. Isolate problem collector by alternately switching flow between two previous operating collectors. If problem collector is identified, either avoid use of this collector, or use one of the strategies identified above to move debris through the collector and bypass.

6. If injury persists:
    a. Problem is likely occurring downstream in the fish well, fish hoist apparatus, or fluming system. This should be reexamined visually for debris or other problems.
    b. It is possible that both collectors and are causing injury. Switching operation to a third collector (if possible) can be attempted to eliminate this possibility.

7. Stop fish passage and switch flow to the flood control tunnel, dewater fish facility, and inspect to locate and remedy problem.

3.4.6 Downstream Release

Fish collected at the facility will be separated by size and transported downstream via truck. The primary release point is planned near the Tacoma watershed office at approximately river mile 60. This is the preferred release location by the resource managers because it transports fish around both HHD at RM 64.5 and the Tacoma diversion dam at RM 61. A design is currently being developed. This will

likely include several concrete raceways connected to a release pipe and a small pump station. The release facility will be managed to allow for volitional release of fish. After a maximum time period of about 24 hrs, fish will be forced out of the raceways and into the river.

During periods of low fish passage, it is anticipated that 1-2 transport cycles will be required per day. These are anticipated to occur at the end of the day placing fish into the release facility just after dusk. At this time fish from the previous day will be forced out into the river. During periods with greater numbers of fish, the cycle time will be increased depending on the number of fish received up to the design cycle time of 40 minutes. The release facility will be designed to contain at least four transport cycles of fish.

3.6 ATTRACTION FLOW

A primary objective of the project is to maximize flow through the fish facility. By maximizing fish attraction flows through the fish facility, fish are expected to more readily locate the fish facility outlet thereby reducing migration delay and residualization in the reservoir. Limited attraction flow has historically been a fish passage problem at dam facilities.

The fish facility is expected to operate between March and November of each year depending on reservoir elevation. When the reservoir is above approximately 1080 ft, flow is routed through the fish facility. Only one collector can be used until the reservoir reaches about 1100 ft, at which time a second collector is available. Each collector has a capacity of 600 cfs. When two collectors are operating, the facility has a capacity of 1200 cfs. This is approximately the median discharge at the project during the spring juvenile salmon outmigration period from roughly March to July. Based on table 3.3, it is expected that the majority of flow during the spring will be routed through the fish passage facility. The top of the flood control tunnel is elevation 1047 ft. When discharge is greater than 1,200 cfs, the balance of flow will be routed through the flood control tunnel. At lower reservoir elevations early in the year (March), it is possible that fish will detect flow through the tunnel. This would be most likely during the initial start of the facility when the reservoir is below 1100 ft and when only one fish collector is operating. As indicated in table 3.3, median discharge in March is about 1,000 cfs. Therefore the majority of flow is still expected to be passing through the fish facility. The higher elevation of the fish facility collector relative to the tunnel will likely also attract fish to that location relative to the tunnel.

3.7 TEMPERATURE MANAGEMENT

As a result of the low elevation flood control tunnel, HHD has historically released water from the bottom of the reservoir. During the spring and early summer this water is relatively cold while the upper parts of the reservoir get progressively warmer as the summer continues. As the cold water reservoir is gradually depleted during the summer, this can result in warmer water being released in the late summer and fall when adult salmon return to spawn in the lower river.

The new fish facility will be capable of drawing water from 1 of 5 elevations in the reservoir (i.e. every 22 ft). This will allow for a release that is more consistent throughout the year and that potentially

matches incoming water temperatures. Each collector is capable of passing between 200 and 600 cfs. It will be possible to pass some combination of flow from two collectors at different elevations, for example, 200 cfs from the top collector and 200 cfs from the bottom collector. Flow is expected to be close to evenly distributed between two operating collectors with variation less than 5%. This activity is expected to be refined over time as more experience is gained with mixing and matching flows from various elevations. In order to monitor this activity, temperature will be monitored at each collector elevation, at a location immediately downstream, and above the reservoir.

Temperature is also an important consideration for collecting fish. Most fish are expected to be collected in the spring. However, there will likely be a small percentage of fish passing the facility over the entire period of operation. During the summer as the reservoir heats up, fish were found distributed at deeper elevations relative to earlier in the year (USFWS 1993). The fish facility collectors can be operated to account for this change in fish distribution. For example, if monitoring data indicates fish are primarily located 30 ft below the surface, a collector nearest this elevation can be operated.

Finally, the city of Tacoma has indicated a preference for passing water at depth rather than from the surface during the mid-late summer due to water quality concerns. In August, algae are relatively common in the near surface of the reservoir. Collecting water from below this elevation will result in water free of algae for the Tacoma water supply intake at RM 61. This objective is largely consistent with the fish passage and temperature goals identified above. As more experience is gained operating the facility and addressing the various stakeholder interests, operations may be modified to best achieve all objectives.

3.8 DEBRIS

Debris is likely to present unique challenges to the fish facility. As a mitigation measure, all vegetation was retained around the reservoir to provide fisheries habitat. As a result, the first few years of operation are likely to see relatively high debris loads reaching the fish facility. In addition, the Green River and tributaries above the reservoir may contribute large amounts of debris (trees, leaves, needles) annually depending on the severity of winter floods.

The primary objective for debris management is to keep debris away from the fish facility and flood control tunnel. This is currently accomplished by a series of log booms. Several log booms will be added to the reservoir to keep debris from the fish facility. The next line of defense against debris is a trashrack placed at the entrance to the fish collectors. The trash rack grid size is 6 inches horizontal by 18 inches vertical. This will keep larger debris from entering the facility. Debris that makes it through the trash rack will either be caught on the screen or pass through the bypass pipe into the fish well. The bypass opening is designed to be larger than the opening of the trashrack. Debris that collects on the incline screen will be removed periodically by rotating the screen. This will direct debris down into the fish well or into the bypass. The frequency of screen rotation will be determined based on experience with debris. Changes in pressure across the screen as well visual observation will be used to determine this frequency. A downside to screen rotation is that fish entering the facility during a screen rotation will likely enter the fish well where survival is expected to be low. Screen rotation is expected to take approximately 2-3 minutes. The entrance to the bypass pipe is the most likely place for debris to collect.

This area will be monitored visually and by pressure sensors. If an adverse condition occurs where debris is lodged in the bypass, steps that can be taken to remove debris include:

1. Rotate the screen to change hydraulic conditions around bypass to move the debris.
2. Increase flow and velocity through the bypass.
3. Shift operation to a different fish collector.

3.5 UPSTREAM FISH PASSAGE

Upstream fish passage is the responsibility of Tacoma Public Utilities (TPU). TPU has constructed an upstream trap and haul at the Tacoma diversion dam at RM 61. Limited operation for testing purposes has been initiated including the transport of 1,419 pink salmon above HHD in 2007 and 72 coho salmon released above HHD in 2008. The purpose of the latter release was to study fish migration through reservoir to help determine appropriate future release locations. The release point for adult fish transported above the dam is uncertain at this time. A number of tributaries feed the reservoir including the North Fork Green River, Gale Creek, and Charley Creek (Figure 3.1). Consequently, there is a desire to maximize use of all available habitat by releasing adults at the downstream end of the reservoir as opposed to the mainstem Green River upstream of the reservoir. This may have some effect on the number of adult fish that 'fall back' and are collected at the downstream fish facility. Ultimately, decisions about adult release will be made by WDFW and MIT and implemented by TPU. The Corps will assist this effort as necessary.

Regardless of the release location, it is expected that some percent of adults placed above HHD will fall back and be captured by the downstream fish facility. The facility is designed to separate these individuals from any downstream migrants and hold them for short periods of time. These fish can then be transported downstream or alternatively sent back upstream. The Corps anticipates receiving guidance from the fishery co-managers on how to handle these fish. Adult fall back can occur in the fall as Chinook, coho, and pink salmon are transported upstream. During this time, few juvenile fish are expected at the facility. Adult steelhead will be transported upstream in the winter and spring. Adult steelhead that arrive at the downstream facility could be the result of fall back or they could be kelts that have already spawned. Kelts will be transported downstream. Steelhead that fall back could be delivered either upstream of downstream. The Corps will be responsible for transporting any adults downstream.

3.9 MONITORING AND ADAPTIVE MANAGEMENT PROGRAM

Adaptive management and monitoring is a critical link to agency and tribal acceptance of regional water supply plans and for implementation of the AWS Project. There are several goals of the fish passage monitoring plan. They include 1) fish facility testing to ensure safe fish passage through the new facility, 2) long term operational monitoring to verify the facility is operating properly at any given time, and 3) reservoir monitoring to verify successful fish passage through the larger reservoir. More detail on the monitoring plan can be found in Appendix C.

Several questions remain about the optimal incline fish screen design for the fish facility. As a result of this uncertainty, the cost of the screen assembly, and the fact fish behavior/interaction with the screen can't be effectively modeled, a phased construction approach is planned whereby only two screens would initially be constructed. A 'full scale' test of the two screens will follow. Test results will be used to select one of the two constructed screens or alternatively modify the screen apparatus prior to a second round of testing. A final screen alternative will then be selected and incorporated into the five fish collectors. This approach will provide greater assurance the facility will meet the objective to successfully and efficiently pass fish downstream. More detail on the testing protocol and rationale for this approach can be found in Appendix C.

3.10 REFERENCES

Fish Passage Technical Committee. 1990. Howard Hanson Dam Fish Passage Alternatives for Proposed New Operating Rule Curve. 25 p.

Hage, P. 2009. Harvest Management Program unpublished data. Muckleshoot Indian Tribe.

Matsuda, R.I., G.W. Isaac and R.D. Dalseg. 1968. Fishes of the Green-Duwamish River. Municipality of Metropolitan Seattle, Water Quality Series #4.

U.S. Forest Service. 1996. Green River Watershed Analysis. North Bend Ranger District, Mt. Baker-Snoqualmie National Forest. North Bend, WA.

Washington Department of Fish and Wildlife. 2008. Chinook Salmon and Steelhead spawner survey data and escapement estimate. Unpublished data.

Washington Department of Fish and Wildlife. 2003. 2003 Juvenile Salmonid Production Evaluation Report. Green River, Wenatchee River, and Cedar Creek. November 2004. Prepared for The Washington Salmon Recovery Funding Board.

Wunderlich, R.C. and C. M. Toal. 1992. Potential effects of inundating salmonid tributary habitat due to increased impoundment at Howard Hanson Dam. U.S. Fish and Wildlife Service. Olympia, Washington. 65 p.

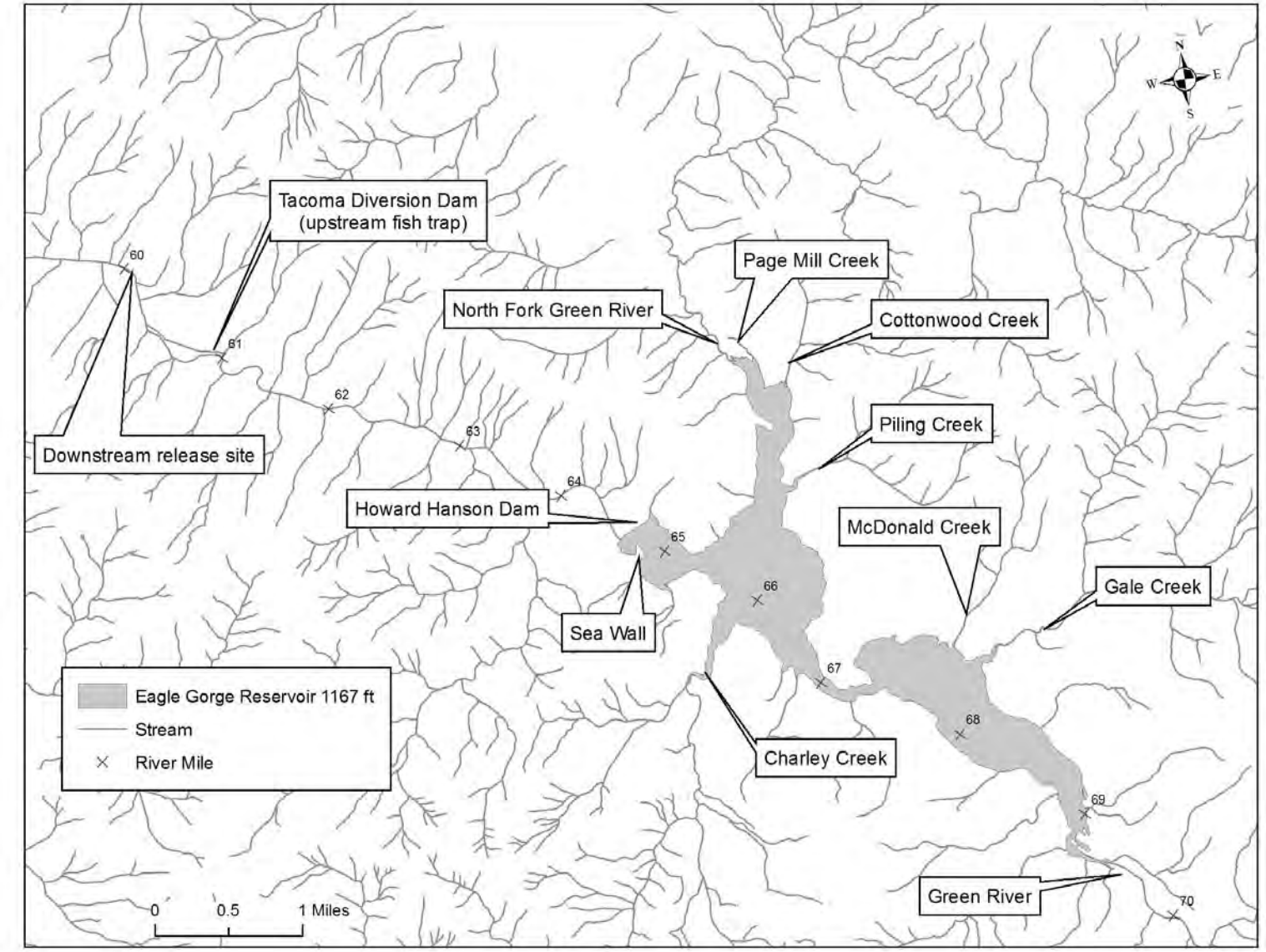

Figure 3.1. General project map indicating major tributaries and downstream release site.

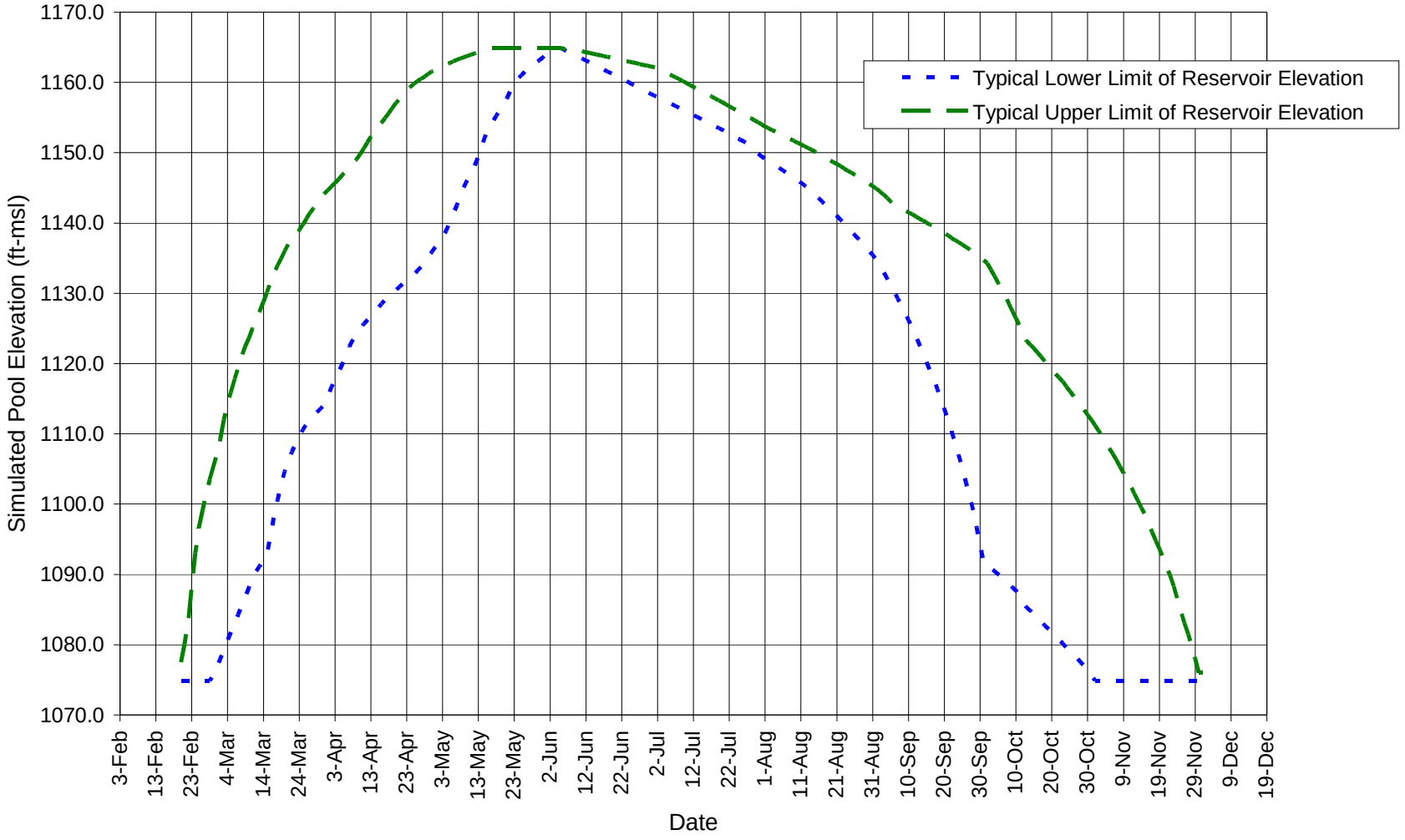

Figure 3.2. Simulated Typical Range in HAH Reservoir Elevations Under Phase I AWSP

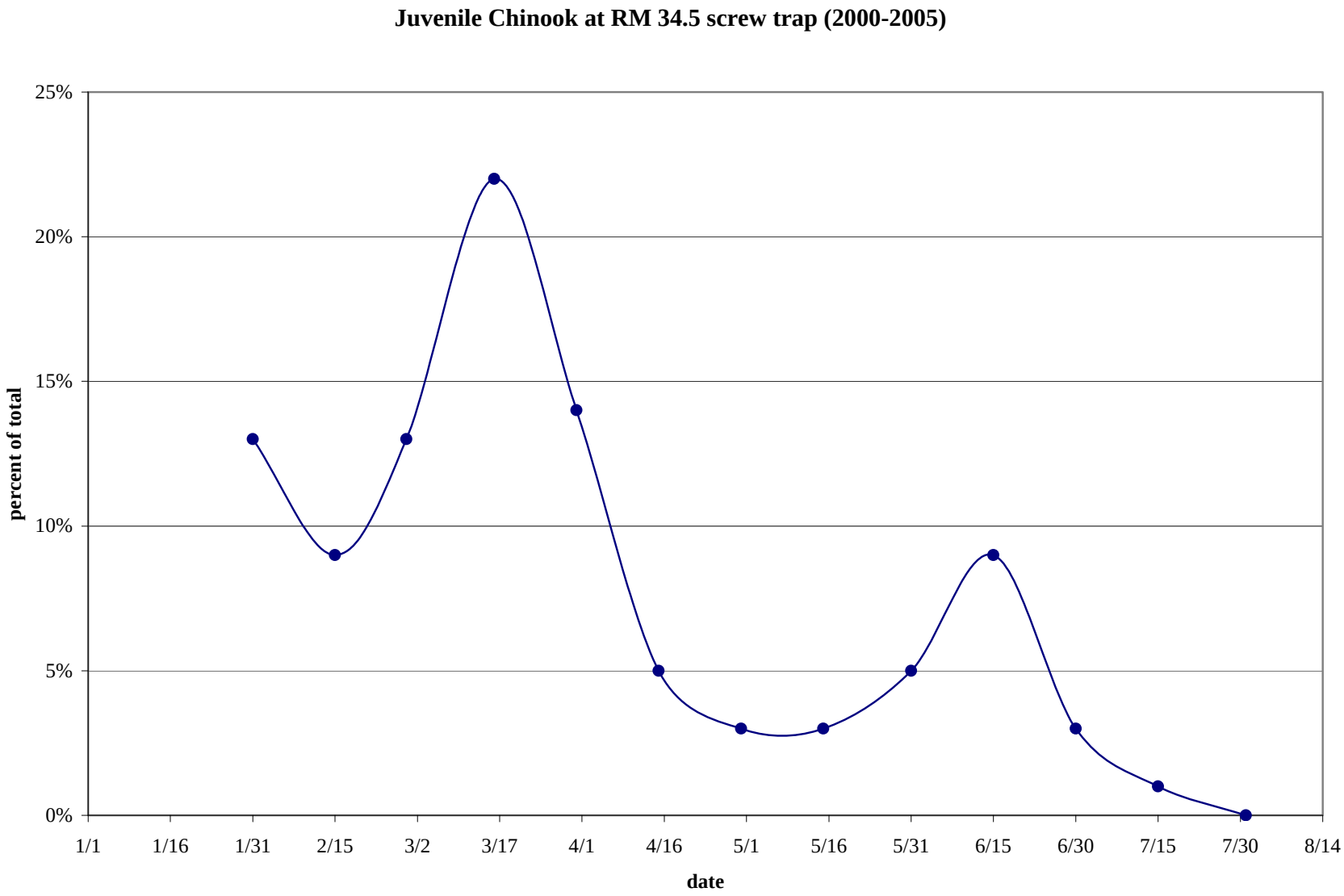

Figure 3.3. Lower Green River Chinook salmon timing at RM 34.5 screw trap

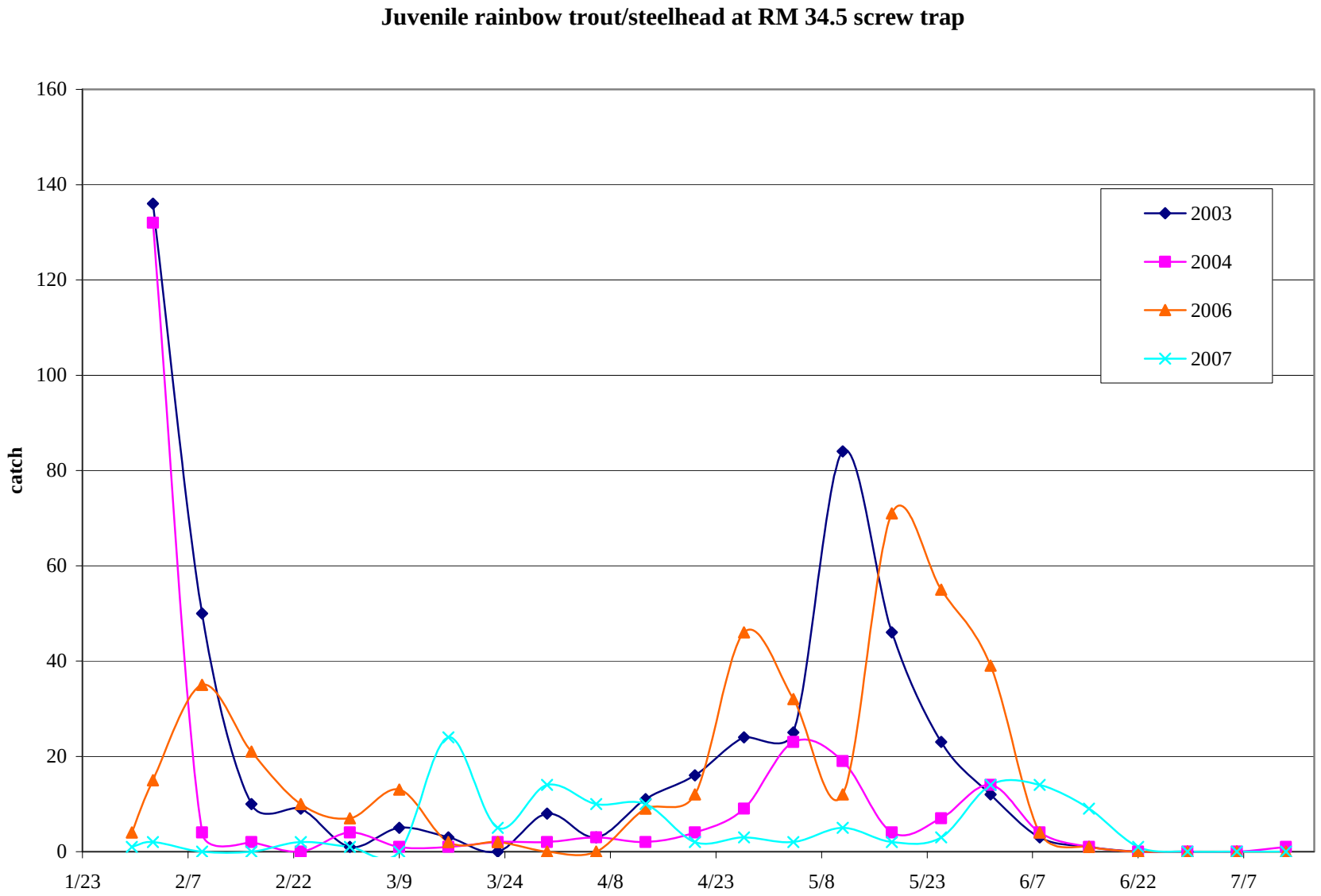

Figure 3.4. Lower Green River rainbow trout/steelhead timing at RM 34.5 screw trap

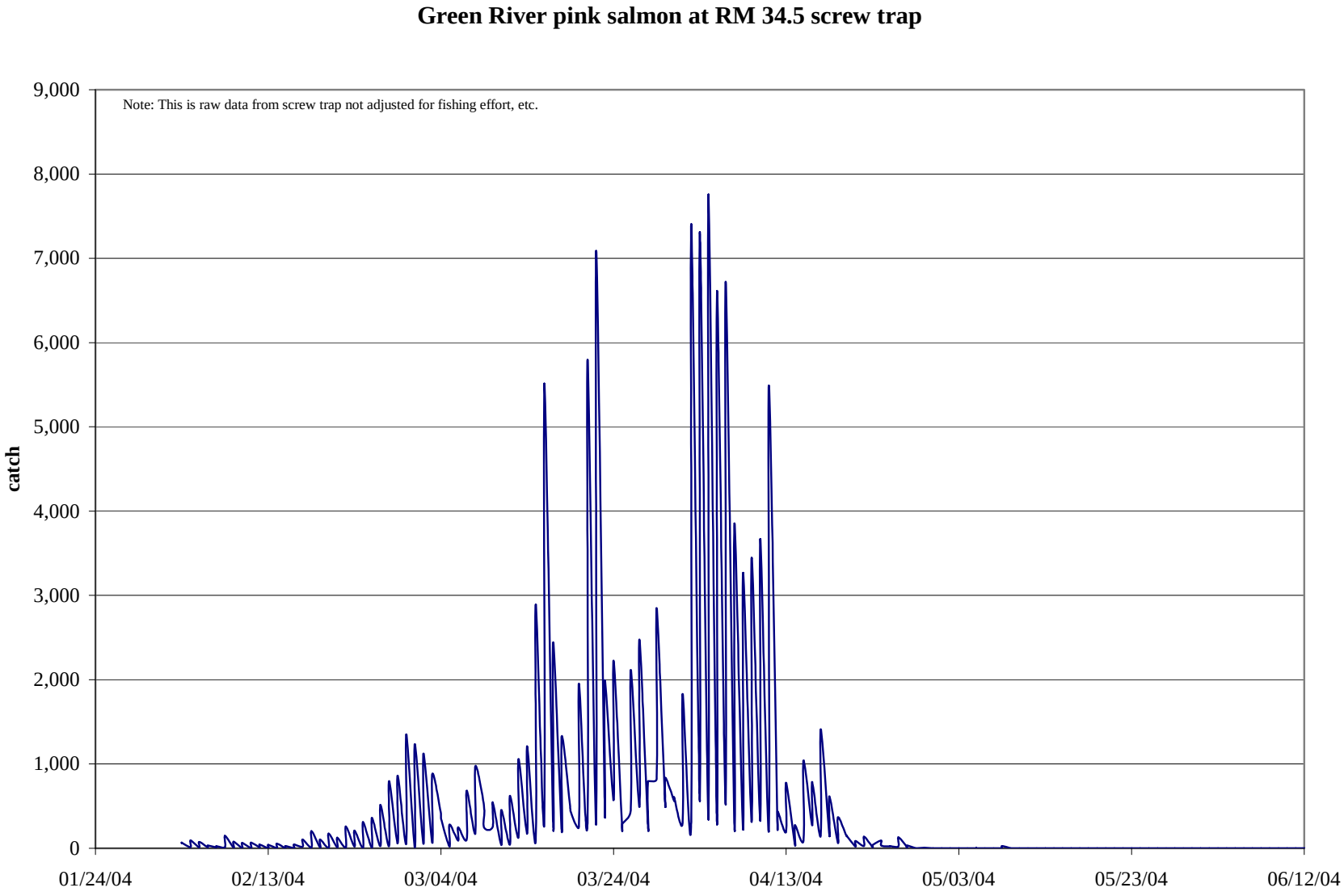

Figure 3.5. Lower Green River pink salmon timing at RM 34.5 screw trap, 2004

Table 3.1 Fish species found in the Green River

Common Name	Scientific Name
Chum salmon	*Oncorhynchus keta*
Coho salmon	*O. kisutch*
Chinook salmon	*O. tshawytscha*
Pink salmon	*O. gorbuscha*
Sockeye salmon	*O. nerka*
Steelhead trout	*O. mykiss*
Cutthroat trout	*O. clarkii*
Dolly Varden	*Salvelinus malma*
Bull trout	*S. confluentus*
Brook trout	*S. fontinalis*
Mountain whitefish	*Prosopium williamsoni*
Largescale sucker	*Catastomus*
Longnose sucker	*Catastomus catastomus*
Pacific lamprey	*Lampetra tridentata*
Western brook	*Lampetra richardsoni*
River lamprey	*Lampetra ayresi*
Longnose dace	*Rhinichthys cataractae*
Speckled dace	*R. osculus*
Northern pikeminnow	*Ptychocheilus*
three-spine stickleback	*Gasterosteus aculeatus*
Prickly sculpin	*Cottus asper*
Torrent sculpin	*Cottus rhotheus*
Riffle sculpin	*Cottus gulosus*
coastrange sculpin	*Cottus aleuticus*
mottled sculpin	*Cottus bairdi*

Table 3.2. Depths fish are required to dive in order to enter various fish collectors.

5 fixed collectors

collector	collector depth (screen room) base	centerline	top	estimated pool elevation for operation at 600 cfs [1]	projected date elevation reached (phase 1)	projected date elevation reached (phase 2)	depth to **top** of collector at start of operation	depth to **base** of collector at start of operation	depth to **top** of collector before switch to next higher collector	depth to **base** of collector before switch to next higher collector
tunnel	1035		1047	1070 [2]	na	na	23	35	32.1	44.1
1	1063.0	1067.6	1072.1	1079.1	2/20 - 3/4	2/16 - 3/1	7.0	16.1	29.0	38.1
2	1085.1	1089.6	1094.2	1101.2	2/27 - 3/18	2/24 - 3/9	7.0	16.1	28.9	38.0
3	1107.0	1111.5	1116.1	1123.1	3/9 - 4/7	3/5 - 3/20	7.0	16.1	29.0	38.1
4	1129.0	1133.5	1138.1	1145.1	4/3 - 5/8	3/22 - 4/17	7.0	16.1	29.0	38.1
5	1151.0	1155.5	1160.1	1167.1	5/16 - 6/4	4/24 - 5/3	7.0	16.1	17 [3]	26 [3]

5 fixed collectors - phase 1 reservoir 1167ft max

collector	projected dates of operation [4]	number of days in use	# days fish required to dive < 10 ft to top of collector	# days fish required to dive > 10 ft to top of collector	# days fish required to dive > 20 ft to top of collector	rate pool rising (ft/day)
tunnel	11/1 - 3/4					
1	2/20 - 3/18	26	3.5	22.5	10.7	0.8
2	2/27 - 4/7	40	5.5	34.5	16.3	0.5
3	3/9 - 5/8	60	8.2	51.8	24.5	0.4
4	4/3 - 6/4	62	8.5	53.5	25.4	0.4
5	5/16 - 6/5	20	20.0	0.0	0.0	0.0
	total days:		45.7	162.3	76.8	

5 fixed collectors - phase 2 reservoir 1177ft max

collector	projected dates of operation [4]	number of days in use	# days fish required to dive < 10 ft to top of collector	# days fish required to dive > 10 ft to top of collector	# days fish required to dive > 20 ft to top of collector	rate pool rising (ft/day)
tunnel	11/1 - 3/1					
1	2/16 - 3/9	21	2.9	18.1	8.6	1.0
2	2/24 - 3/20	25	3.4	21.6	10.2	0.9
3	3/5 - 4/17	43	5.9	37.1	17.6	0.5
4	3/22 - 5/3	42	5.7	36.3	17.2	0.5
5	4/24 - 7/20	88			0.0	na
	total days:		28.5	113.1	53.5	

Notes:

[1] Assumes 7ft of reservoir above top of collector before operation can begin in order to avoid vortexes. This is based on current modeling data. Further modeling and actual operation may allow operation at less submergence.

[2] Minimum reservoir elevation c

[3] Maximum depth for phase 2 reservoir is 1177ft.

[4] Assumes operation of only one collector passing 600 cfs. In order to pass 1200 cfs the next lower collector must also be used. This will not change minimum depths.

[5] Assumes reservoir will stay at 1167 during this period. Less than 600 cfs will pass through collector if below 1167ft.

[6] From 3/30 - 4/5 and 8/21 - 9/1.

[7] Phase 2 full reservoir 1177ft is expected 4/15.

Table 3.3. Median discharge at Howard Hanson Dam 1961 - 2003

Howard Hanson Dam median discharge 1961-2003												
date	October	November	December	January	February	March	April	May	June	July	August	September
1	273	497	1040	808	1060	919	1150	1350	802	471	248	243
2	280	521	1010	803	1040	865	1120	1260	910	476	244	241
3	284	633	1130	807	1050	883	1100	1240	850	472	244	241
4	321	667	1390	880	985	845	1110	1350	750	451	241	239
5	311	774	1210	909	1130	835	1270	1180	701	447	241	241
6	312	694	1080	920	1100	895	1290	1250	676	421	241	239
7	344	655	1140	1070	1110	919	1310	1360	621	414	241	240
8	348	754	1030	893	1050	865	1400	1250	620	404	239	239
9	352	901	910	1040	1050	834	1430	1160	580	414	241	240
10	349	776	1000	921	1020	946	1420	1120	554	414	242	241
11	349	815	1180	963	953	941	1340	1150	560	402	242	241
12	347	872	1170	970	904	930	1240	1120	565	371	241	239
13	345	936	1150	980	942	900	1230	1110	560	369	243	241
14	336	980	1170	1190	950	925	1300	1190	527	357	242	250
15	335	901	1090	1170	920	995	1290	1240	560	369	243	249
16	337	816	1110	1150	907	974	1260	1330	560	357	244	248
17	353	845	1070	1150	990	977	1210	1230	521	331	244	248
18	352	934	1090	1100	1010	1010	1150	1160	488	324	243	247
19	359	879	1070	1200	990	985	1130	1170	464	304	244	254
20	367	891	982	1030	970	925	1170	1150	490	279	243	260
21	353	1070	964	1050	982	945	1130	1010	504	279	243	260
22	364	1030	990	921	1040	1050	1100	982	477	277	244	258
23	400	914	984	1070	1110	1090	1090	945	472	264	242	258
24	408	920	1010	1000	1070	1120	1100	945	499	264	242	265
25	438	1190	1000	970	995	960	1090	925	486	263	242	286
26	420	1110	910	949	1170	925	1170	915	463	260	244	289
27	453	1150	799	853	1060	1040	1230	953	465	256	244	287
28	453	1150	823	909	945	1050	1230	851	440	257	244	287
29	441	1290	830	1050	1040	1030	1230	885	451	248	241	285
30	445	1140	835	1170		1100	1250	820	430	249	241	282
31	446		793	1160		1100		825		248	244	

CHAPTER 4 (RESERVED)

CHAPTER 5 HYDRAULIC DESIGN

5.1 HYDRAULIC DESIGN CRITERIA

There are two basic design considerations for hydraulic features of the proposed structures. The first objective is to develop an acceptable hydraulic design, and the second is to develop an economically feasible and fish-friendly passage facility for downstream migrant anadromous fish.

Fish passage facility features are subject to standard Corps hydraulic design guidance where applicable, including (but not necessarily limited to) the following.

EM 1110-2-1602 Hydraulic Design of Reservoir Outlet Works.

EM 1110-2-1601 Hydraulic Design of Flood Control Channels.

HDC Hydraulic Design Criteria, Sections 000-700 inclusive.

EM 1110-2-1603 Hydraulic Design of Spillways.

EM 1110-2-1402 Hydrologic Engineering Requirements for Reservoirs.

EM 1110-2-2105 Design of Hydraulic Steel Structures.

EM 1110-2-2701 Design of Vertical Lift Gates.

ER 1110-2-1156 Dam Safety Organization, Responsibilities, and Activities.

ER 1110-8-2 (FR) Inflow Design Floods for Dams and Reservoirs.

NMFS has not developed specific hydraulic design criteria for inclined screens of the type employed here, since the method of passing fish in the pressurized regime over inclined screens (e.g., Eicher Screens and Modular Inclined Screens) is considered to be experimental. In such instances, NMFS "encourages research and development" and has prescribed an experimentation and demonstration process necessary for NMFS support of a permanent facility. The process includes literature research, coordination, laboratory research, and prototype evaluation to develop and demonstrate a design (NMFS 1995) that meets or exceeds efficiencies demonstrated by positive-exclusion screen and bypass systems (PSEBS)[1]. Seattle District has followed this process through planning and design by:

4. Extensive literature review, consultation, and technology exchange regarding existing and experimental inclined screen facilities.
5. Establishment of the Fish Passage Technical Committee, consisting of recognized fisheries experts and representatives of pertinent regulatory agencies, for the various purposes of: (a) study plan and criteria development assistance, (b) planning and design consultation, (c) planning and design review, (d) coordination assistance, and in some instances (e) element design.

[1] Specific measures of performance are not provided, however, 'guidance efficiency of over 98%' is mentioned with respect to PSEBS in the position statement guidance. 'Guidance efficiency' is undefined.

6. Execution of an extensive physical hydraulic model studies program.
7. Formulation of prototype evaluation plans.

Based on the process outlined above, Project Delivery Team Members developed hydraulic and biologic design criteria in consultation with the Fish Passage Technical Committee. Criteria either do not exist, or have not been adopted by the Project Delivery Team, for the monitoring and transport facility. The following guidelines were used in selecting the fish passage facility configuration. These guidelines are not necessarily fixed criteria, and may be changed as the design progresses, if warranted by new research and agency coordination.

5.1.1 Operational Criteria

- Design operating pool range el. 1080 to 1177 feet.
- Design operating discharge range 230 cfs to 1,250 cfs.
- Primary debris control should be with a forebay log boom.
- Fish to be collected in the vicinity of their predominant vertical distribution in reservoir at any specific time or condition.
- Controlled “acceleration” approaching collection intakes and bypass entrance.

5.1.2 Collector Horn

- Design discharge criteria: Design flow specified as 600 cfs per collector; 1200 cfs total for two collectors.
- Water velocity gradient upstream of the screen (in the collector horn) of 0.3 feet per second per linear foot of approach, when velocity is between 2 and 6 feet per second. A higher gradient is acceptable when velocity is above the fish capture velocity (6 fps).
- No water pressure below atmospheric pressure in fish pathway.

5.1.3 Dewatering Screen

- For optimum debris shedding, bar screen is oriented perpendicular to flow.
- Screen angle of approximately 17 degrees.
- Maximum mean water velocity of 6-8 fps.
- No unacceptable noise or vibration caused by the fish screen / porosity plate assembly.
- Ratio of velocity normal to the screen to average upstream enclosure velocity (Vn / Vo) must be less than 0.45.
- Ratio of screen sweeping velocity to screen normal velocity (Vs / Vn) must be above 2.2.
- Fish screen bar spacing limited to a maximum of 2.1 mm.

- Minimum screen bar width of 0.068 inches (1.75 mm).
- Fish screen porosity of 40% to 60%.
- Bar screen and perforated plate assembly must meet the above guidelines, without exceeding a headloss of 5 to 6 feet (measured from forebay to wet well).

5.1.4 Bypass and Fish Collection

- No pumping of fish.
- Constant bypass flow.
- No negative pressure.
- Pipe radius of curvature > 3 pipe diameters.
- Smooth wall and joints required for all conduits and channels.
- No constrictions that may cause rapid pressure change, direct impact of injury to fish, or may cause collection of debris.
- No slow-action closure valves (e.g., butterfly or gate type) within the bypass system to include no partially open valve operation. Rapid action pinch valves or equivalent with no partially open operation are the preferred alternative.
- Maximum velocity = 25 fps for full pipe flow.
- For discharge between 200 and 600 cfs, facility must provide juvenile fish capture velocity of 6 fps or higher at the downstream end of the fish screen, at the entrance to the fish bypass conduit.
- Limit fish well turbulence.
- Energy dissipation in the fish well of 4 ft-lbs per second per cubic foot of fish well volume (or less), at a total discharge of up to 70 cfs.
- Access necessary to check locations of possible debris accumulation.
- Fish to be attracted or guided to bypass.

5.2 PHYSICAL HYDRAULIC MODEL STUDIES

A physical modeling program was conducted to assist in the design of the fish passage facility. The program involved four separate model studies:

8. A general model at 1:50 (model : prototype) scale to verify the hydraulic performance of the Howard Hanson Dam spillway for the existing project configuration when the fish passage facility is constructed, as well as to investigate the potential for pressurization within the existing flood control tunnel. These studies were completed in June 2000 (NHC 2000).

9. A sectional model at 1:15 scale to investigate the overall fish passage facility design, the existing and with-project flood control outlet works performance, and forebay approach flow characteristics. These model studies were completed in March 2003 (ENSR 2003).
10. A screen model at 1:8 scale to investigate in detail the hydraulics of the collector horn, screen enclosure and inclined screen, fish collector bypass, and fish well. These model studies were completed on a preliminary design in March, 2003 (ENSR 2003a). However, due to subsequent design changes, a new study was initiated in 2004 and is ongoing.
11. A "fish lock" (now referred to as a fish well) model for the purpose of investigating the behavior of juvenile salmonids within a turbulent flow field. This study was completed in August 2001 (Ramey *et al.* 2001).

The general objectives of the scale physical hydraulic models (1-3 above) were to assist in the final design and evaluate the hydraulic performance of the fish passage facility to ensure that hydraulic and biological design criteria are met. Specific objectives were to:

- Determine approach flow conditions to the fish passage structure over the full range of pool elevations and with various combinations of simultaneous operation of the flood control tunnel and the fish passage structure (see 5.2.2.1).
- Verify that design of the confluence between the flood control tunnel and the fish attraction water conduit provides acceptable flow conditions: no adverse spiraling of water in the tunnel downstream from the confluence, no cavitation-generating low pressures, etc. (see 5.2.2.6).
- Evaluate flow conditions within the wet well chamber through the full range of pool elevations and fish passage facility flows (see 5.2.2.3).
- Evaluate general hydraulic conditions over the entire length of the attraction water conduit and develop water conduit rating curves (see 5.2.2.5)
- Evaluate the velocity field in the horn and along the inclined screen, and modify the screen and support structure to achieve a satisfactory velocity field on the screen (see 5.2.3.2).
- Investigate hydraulic conditions at the inclined screen when it is rotated to a cleaning position (see 5.2.3.3).
- Confirm/assist in developing an acceptable design of the transition section from the inclined screen to the fish bypass, and develop the fish bypass discharge relationship for various head differentials between reservoir and fish well water surface elevations (see 5.2.3.5).
- Characterize the depth of the turbulent regime in the fish well chamber (see 5.2.2.7).

Substantial design and operational changes were proposed and adopted by the Project Delivery Team for the FPF while the original 1:8 model studies (completed in March 2003) were in progress. Additional design modifications have been adopted as a result of specific model study results. These changes necessitated a new 1:8 scale physical hydraulic model investigation. This ongoing work will study the effect of proposed design changes on:

- flow properties of the wet well and approaching the attraction water conduit (AWC) inlet;
- flow patterns near the inclined screens;
- bypass discharge and near-screen velocity field attributes;
- flow in the fish collector bypass conduit;
- head loss and flow control attributes of the operational bulkheads;
- the bypass discharge rating curve;
- AWC radial gate discharge rating curve; and
- inclined screen performance during dual collector operations.

Additional tests may be conducted to evaluate revised confluence geometries; evaluation of alternative screen types on flow and head loss properties in enclosure; debris accumulation on screen and the efficacy of screen cleaning by rotation; and evaluation of the three dimensional turbulent flow regime within the fish well due to increased fish bypass discharge. If undesirable conditions are revealed during these studies, the models may be used to assist in remedial design.

Completed model investigations are addressed in following paragraphs. Investigation elements are summarized as to purpose, findings, and status. The ramifications of design modifications with respect to the completed model studies are addressed in turn. Recommendations regarding each element are proposed as necessary. The reader is referred to the detailed model study reports for more information (see references).

5.2.1 1:50 Scale General Model

A 1:50 scale model was constructed and tested in the Vancouver, B.C., laboratory of Northwest Hydraulic Consultants, and results have been presented in a final report (NHC 2000). The model was used to evaluate potential impacts of the then proposed fish passage facility on spillway capacity, and to evaluate the potential for pressurized flow within the existing flood control tunnel. The fish passage facility was represented by geometry only; it was not constructed to pass water, as the study purpose did not require that water be passed through it. The facility alignment, grading plan, tower size, and geometry have since been modified, and questions have been raised regarding how these changes would change interpretation of the general model study's findings. These questions are reported and addressed in Appendix I. The findings of the model study investigation are reported below.

Much of the following discussion is adapted from Chapter 5 of NHC's final model study report (NHC 2000).

The existing spillway was not modeled prior to its construction, so the 1:50 model was used to verify the spillway discharge rating curves for the existing geometry and then for the new geometry with the fish passage facility located within the approach to the existing spillway. Model results showed good agreement to the Corps-calculated spillway rating curve for un-gated operation but suggested the Corps rating underestimates the head required to pass discharges in excess of 100,000 cfs by about 0.5 feet. The proposed fish passage facility results in a rise in the spillway head/discharge rating curve of about 1.8 feet at 20,000 cfs (pool el. 1222 feet) to

approximately 0.5 feet at 125,000 cfs. Existing and with-project rating curves are shown in Appendix I. Nappe profiles are essentially unchanged from those for the existing condition.

The model revealed that intermittent contact between the nappe and the bottom of the fully open gate lip occurs at maximum gate opening with a spillway discharge of 100,000 cfs,. Contact between the nappe increases as discharge increases until gate controlled conditions develop at about 110,000 cfs. For the existing conditions, spillway discharge is about 113,000 cfs when the pool elevation is 1228 feet, the published dam crest elevation; with the fish passage facility in place, the corresponding discharge is 110,000 cfs. The spillway discharge required for routing of Probable Maximum Flood (PMF) is 108,000 cfs (USACE 2001). This means that for the existing condition and under the present extreme flood event operating rules (USACE 2001), the project would be at the verge of overtopping in order to pass the required PMF spillway discharge due to gate lip impingement and a subsequent shift in control from gate lip to orifice conditions. At discharges in excess of 108,000 cfs, existing gate-lip impingement impacts on the spillway rating curve result in increases in pool elevation of 2.5 feet or more, depending on discharge, than possible with un-gated, with-project conditions.

The model revealed that far-field spillway approach flow approach patterns are similar for the existing and with-project geometries, as the majority of flow approaches the spillway in a direction parallel to the dam face. Near-field (in the vicinity of the existing outlet works and outlet works access bridge) existing local velocities are increased by 10 to 75 percent.. The highest velocity increases are located near bridge pier 2 of the existing flood control tower access bridge and in the near vicinity of the fish passage facility. Approach flows to the right spillway bay are highly non-uniform for both configurations, due to the flow dropping and turning into the spillway from along the face of the dam embankment. The rapid change in flow direction and flow control near the right gate causes flow separation and high velocities near the north abutment of the spillway.

Model results indicate the flows over the spillway lowered tailwater elevations at the flood control tunnel outlet portal and allow the tunnel to operate as a free surface open channel over its entire length with spillway discharges up to the PMF. However, the model study report recommends that tests be performed at a larger scale ratio and with the tunnel geometry correctly simulated (using the actual horseshoe cross-section vs. the rectangular section used in the 1:50 model) to more properly consider air bulking and spiral flow over the tunnel crown that possibly could cause the tunnel to intermittently pressurize. In the absence of these more inclusive model studies, NHC recommends limiting existing flood control tunnel discharge to 10,000 cfs during times of concurrent spillway discharge. These recommendations were adopted by the Seattle District and subsequently folded into the 1:15 scale physical hydraulic model testing program as discussed in the next paragraph.

The issues of existing gate lip impingement phenomena, the with-project spillway gate rating curve shift, changed with-project conditions, spillway approach flow conditions, and tunnel outlet capacity are central to the dam safety purpose and are being discussed and coordinated by the Seattle District staff with design team input. Appendix I discusses design team findings in more detail.

5.2.2 1:15 Scale Model

The 1:15 scale physical model studies were conducted in Redmond, Washington, by ENSR Intl. and included elements of both the existing flood control tunnel and the preliminary 35% design (since revised) fish passage facility. Flood control outlet works include a portion of the forebay, the existing flood control tower intake structure and trash rack, radial gates, flood control tunnel, and stilling basin. Fish passage facility elements include the intake section and trash rack; a single, vertically adjustable (or "hoisted") collector and dewatering screen assembly with bypass; a fish well, wet well; attraction water conduit and AWC radial gate; and FCT-AWC confluence. Preliminary testing capability provided for a prototype operational elevation range of el. 1080 feet to 1225 feet and total prototype discharge to nearly 16,000 cfs. Discharge to 1,300 cfs was run through the hoisted collector. Dedicated fish passage facility tests required construction modifications that reduced the maximum prototype operating elevation to el. 1180 feet.

Though the design of the fish passage facility has changed since these studies were conducted, most notably in evolving from the single hoisted collector to the multiple collector array scheme, the changes have been judged as being either insignificant with respect to the study's findings, or, where there is some question as to the hydraulic significance of the changes, the 1:8 model will serve to prove the performance of the revised design. Therefore, the 1:15 scale model has served its purpose and has been demolished. Portions of the model, including (1) the existing outlet works control gates, (2) the flood control tunnel and AWC confluence, (3) the AWC and AWC regulating gate, and (4) the flood control tunnel transition to the stilling basin, have been retained by Seattle District in the event that future flood control tunnel performance studies are deemed necessary by the District.

A number of tasks were executed using the 1:15 model and are reported in detail elsewhere (ENSR 2003). These tasks are summarized in turn below and also discussed in terms of future physical modeling needs as necessary.

5.2.2.1 Approach Flow Conditions

Preliminary investigations were conducted to ascertain the uniformity of approach flow conditions. These revealed separation of flow along the right (downstream orientation) facility approach wall extending from the trash rack to the fish collector entrance. This was deemed undesirable as a potential area for predator holding. A series of wall and trash rack geometry modifications were attempted in the model in order to minimize flow separation, and a satisfactory elliptical approach wall geometry was identified and adopted to the present design.

5.2.2.2 Fish Horn, Inclined Screen Enclosure, and Deflector Conditions

These fish collector elements, expressed in order upstream to downstream, comprise the fish collector. Preliminary testing with dye showed well behaved flow conditions throughout. Pressures were measured external to the collector and internal to the deflector hood. External pressures and pressures within the deflector hood varied hydrostatically.

The presently proposed collector design consists of a vertical array of collectors. The design discharge of each collector in the array is approximately half the design discharge of the hoisted collector that was modeled. The array will not accommodate a deflector hood and it has been deleted. Thus, the design loading conditions are significantly changed from that modeled. The deletion of the deflector hood is of some concern, due to reduced wet well size and the need to operate two collectors, as wet well turbulence could propagate effects to flow properties over the operating inclined screens.

More detailed inclined screen flow property evaluations were conducted using the 1:8 model; these are discussed elsewhere in this report. Additional recommendations regarding these elements are put forth in the appropriate sections in the 1:8 model investigation summaries.

5.2.2.3 Wet Well Hydraulic Conditions

Investigations were conducted to determine the effects of wet well hydraulic conditions on the stability of the collector and to identify any adverse conditions at or approaching the inlet to the attraction water conduit. The wet well water surface was determined to be generally quiescent. Pressure measurements suggested that wet well conditions would have little potential to influence the stability of the hoisted collector.

Subsurface vortices formed intermittently near the sidewalls upstream of the AWC entrance and extended to just upstream of the radial gate. The vortices were not considered to be a factor for gate stability due to their transient, moving nature and because they did not extend to the regulating gate. Pressures measured at the AWC bell-mouth transition yielded pressure drop coefficients similar to those published in EM 1110-2-1602 (USACE 1980).

The proposed fish collector array and bypasses result in a significantly altered wet well geometry and reduced wet well volume in comparison to the modeled scheme. Quantitative evaluations are recommended for the presently proposed design in the upcoming 1:8 scale model studies to verify desirable hydraulic conditions in the wet well/AWC inlet The 1:8 scale model will be utilized to understand whether wet well extents of the present design result in adverse effects to flow properties over the inclined screen.

5.2.2.4 AWC Hydraulic Conditions

Pressures were measured at the bell-shaped inlet to the AWC. Water surface measurements were obtained for a combination of pool discharge combinations. Pressure drop coefficients at the AWC inlet were in general agreement with EM 1110-2-1602 (USACE 1980) pressure drop coefficients, and free surface flow conditions downstream of the radial gate were verified throughout the prototype operating range.

5.2.2.5 Attraction Water Conduit (AWC) Radial Gate Rating

Clear water (no debris) radial gate rating curves were developed and confirm the design intent of gate control for the maximum discharge/low pool scenario. The gate at this condition is not required per design intent to operate at no greater than 80 percent open. The gate rating

derived from the model studies agrees well, over a range of pool elevations, with gate ratings developed in accordance with EM 1110-2-1602, Hydraulic Design of Reservoir Outlet Works.

The proposed fish collector array results in a significantly altered wet well geometry and reduced wet well volume versus that modeled. The proposed operational scheme also calls for both single and dual collector operation. These changes dictate that the energy grade line at the gate must be different than for the conditions modeled, and the unique geometry of the wet well render prediction of an accurate gate rating curve uncertain. Further 1:8 scale model studies are proposed to revise the AWC radial gate rating curves for both single and dual collector operations.

5.2.2.6 AWC - Flood Control Tunnel (FCT) Confluence Performance

The confluence joins two gate-controlled conduits that will be operated singly or jointly for variable discharge under heads exceeding 120 feet. The FCT gate sills are at el. 1035 feet NGVD, and the AWC gate sill is at el. 1029 feet NGVD. Maximum operating AWC discharge is 1,200 cfs, with maximum AWC and FCT combined operating discharge at 4,000 cfs. Site, structural, and cost constraints dictate that the confluence be located where the FCT is in horizontal curvature. Flow conditions are highly varied at the confluence. The design intents are to minimize the potential for cavitation-induced damage, to maintain requisite FCT discharge capacity under open-channel conditions, and to identify and rectify a-priori conditions that represent chronic reparations expenditures. Effects of the confluence with respect to FCT capacity are discussed in the section dedicated to the Flood Control Tunnel Pressurization Threshold question.

Preliminary, qualitative testing suggested that changes to the confluence design were warranted. Modifications to the confluence decreased the angle of intersection of the AWC-FCT confluence, matched the confluence invert surfaces, raised the roofline of the AWC for a good portion of its length, and increased the radius of the arc segment joining the left walls of the conduits.

Observation of the modified confluence indicates that when operated alone, AWC flow will impact the opposite, or right, wall of the FCT and spiral counter-clockwise over about 75 feet of the crown of the FCT. The FCT, when operated alone, requires about 8,000 cfs to spiral, clockwise, over the crown for a slightly longer distance. FCT flow expands at the AWC outlet and will impact the left wall and ceiling edge of the AWC union. Joint AWC-FCT outlet operations manifest either a standing wave in the midst of the tunnel or, for conditions at which FCT discharge exceeds AWC discharge, a standing wave at the left wall of the tunnel. These findings do not represent an intractable design concern, and performance was deemed satisfactory.

Quantitative testing was conducted with the modified confluence. Instantaneous pressures of 11.5 psi were recorded of AWC flow impacting the right wall of the FCT, and instantaneous pressures to 23 psi were recorded of FCT flow impacting the left wall surfaces of the AWC. These findings do not suggest the need for special surface treatments to resist hydraulic impact effects.

Pressure measurements were also used to compute cavitation indices at various locations in the confluence. From a cavitation potential standpoint, the condition where the AWC operates alone represents the worst-case condition. When operated alone, AWC computed cavitation indices were indicative of high cavitation potential in the vicinity of the arc segment joining the left walls of the AWC and the FCT over most of the anticipated AWC operating range. These findings represented a design concern. The confluence geometry has since been revised by eliminating the arc segment such that the AWC walls remain parallel to the FCT confluence.

Further physical model evaluations of the confluence are not perceived to be necessary.

5.2.2.7 Fish Well Turbulence

Qualitative measures were documented including the use of dye to estimate the depth of turbulence in the fish well. General flow patterns exhibited a slow, counter-clockwise downward spiral due to the asymmetric bypass discharge in conjunction with the well drain. Observations of dye diffusion suggested that an area approximately 20-25 feet or more below the bypass entrance to the well might be considered qualitatively turbulent. This implies that at low operating pool elevations, the majority of the well volume might be considered qualitatively turbulent. Note for reference that for these model studies, the well bottom is at el. 1042 feet NGVD, and the bypass centerline at the well wall was approximately 6 feet below the pool water surface elevation. Therefore, it can be concluded that the pool elevation at which the majority of the volume of the well might be considered qualitatively non-turbulent would be approximately el. 1100.

With-project operating rule curves and the generalized fish migration diagrams published elsewhere suggest that this pool elevation should be attained near the beginning of the downstream juvenile migration season. This conclusion will be generally applicable to the present design, excepting during dual collector operations. A slightly different hypothesis based on the present design is that when collector three is the lowest operating collector, a majority of a fish well's volume might be considered quiescent. When this is not the case, some flexibility exists to modify collector operations if fish well turbulence is shown to be an issue in the prototype.

Three-dimensional laser Doppler velocimeter (LDV) measurements were obtained and suggested a preponderance of volume at resultant velocity of 0.6 fps or less. This is one measure which may be compared to the sustained swimming speeds of the target juvenile salmonids in order to infer their sustained holding capability in the well environment as a function of water temperature. The result obtained by this measure is satisfactory, though similar uncertainty exists in this regard due to changes in design and uncertainty as to the size of the smallest fish that would enter the facility.

The present fish well design provides for 40 % greater volume than the 15' x 15' modeled design, with plan dimensions of about 17 feet x 19 feet. This increase in area is due primarily to the change from two fish wells to a single well and structural efficiencies realized as the design has progressed. The proposed design has also abandoned the passage scheme of drawing down the well and passing the fish through a transport pipe at the well invert in favor of hoisting the fish and collecting them for transport. The elimination of a second fish well results in a single well receiving the bypass discharge from both collectors, combined being 50 to 70 cfs.

This would result in a higher level of turbulence to be imposed on the juvenile fish than would have occurred with the modeled collector scheme, and justified the increase in fish well volume. The existing model fish wells will not be expanded to represent the proposed fish well geometry and new bypass discharge; and no future quantitative model experiments are planned with respect to turbulence.

5.2.2.8 Flood Control Tunnel Discharge Rating Verification

Rating curves were developed to ensure the model gates emulated the performance of the existing regulating gates. Rating curves developed in the 1:15 model study compared favorably to those from the existing project Water Control Manual. Maximum discharge deviations between the ENSR and adjusted (to the present 19-foot tunnel geometry) results was on the order of 8 percent and occurred at relatively high discharges which are rarely passed through the outlet works.

Operational experience suggests that the existing FCT radial gate rating curves are sufficiently accurate and need not be revised. Further FCT gate rating investigations are not considered necessary for purposes related to the Fish Passage Facility.

5.2.2.9 Flood Control Tunnel Pressurization Threshold

The objectives of these tests were 1) to determine the tailwater elevation/discharge/pool elevation conditions at which the outlet of the FCT becomes pressurized; 2) to identify the effects of the confluence on the performance of the FCT; 3) to determine the extents of flow spiraling and super-elevation in the FCT; and 4) to estimate the maximum FCT discharge capacity to ensure open channel flow conditions throughout the length of the FCT.

Tailwater elevations required to reach the pressurization threshold of the tunnel were determined for the existing and with-project configurations. The “pressurization threshold” was defined as a piezometric head of 1028.5 feet, being the FCT soffit elevation at the downstream end of the tunnel at the transition to the stilling basin.

The addition of the confluence slightly reduced the tailwater required to reach the pressurization threshold. The reduction was on the order of 0 to 1 foot depending on discharge. The pressurization threshold is a flow situation in which the tunnel flows are free surface, with the exit portal just submerged. The tailwater (downstream of the stilling basin) elevations required to reach the pressurization threshold are greater than the computed clear water normal-depth tailwater elevations, though there is some uncertainty as to the extent that the computed tailwater depths are realistic. Reaching the pressurization threshold did not pressurize the tunnel throughout its length. Pressurization of the tunnel throughout its length did not occur in these tests, nor in prior physical model study tests conducted by NHC. Tailwater depths required to pressurize the tunnel increase with tunnel discharge. Requisite tailwater depths to achieve the pressurization threshold are reflective of conjunctive spillway use during flood situations exceeding the 500-year recurrence interval event.

The spillway was not modeled in ENSR tests. Previous physical model study tests by NHC (NHC 2000) showed that spillway flow tends to draw down the stilling basin water surface. That study also showed that the required stilling basin elevation required to reach the

pressurization threshold is essentially independent of spillway discharge for a given tunnel discharge. Differences in prototype vs. modeled air delivery (the prototype air shafts were not installed in the model) led to an estimate of 12 kcfs as being the maximum recommended operations discharge to ensure open channel flow throughout the prototype tunnel. Maximum FCT model discharge was on the order of 15 kcfs. The ultimate discharge capacity of the prototype outlet tunnel remains unknown due to air-bulking uncertainty and tailwater uncertainty, though it has been demonstrated that sufficient discharge capacity exists with or without the fish passage facility to meet the authorized project flood control purpose.

The addition of the confluence increases spray, flow super-elevation, and flow spiraling in the vicinity of the confluence. Flow spirals over the soffit of the FCT over a length of about 100 feet for both the existing condition and over a variety of AWC/FCT discharge combinations. Originally, the team had envisioned suspending the fish transport pipe from the soffit of the FCT; however, this is no longer necessary as fish will be hoisted from the fish well and transported downstream by other methods, and flow spiraling is no longer an issue in this regard.

Additional physical model studies regarding this element are not envisioned at this time, though dam safety investigations related to these findings are ongoing.

5.2.3 Previous 1:8 Scale Model (ENSR 2003a)

Physical model studies were conducted in Redmond, Washington, at 1:8 scale, by ENSR Intl. and included elements of the preliminary 35% design (since revised) fish passage facility and a small portion of the forebay. The 1:8 scale physical model included the trash rack; a single, vertically adjustable fish collector horn and dewatering screen; the wet well; a fish bypass conduit to a single fish well; and the lower part of the wet well, including the AWC entrance. Elements of the existing flood control outlet works were not included in the 1:8 scale model.

A new 1:8 model is presently underway and summarized below. Since the fish facility design has significantly changed since the final report of the previous model study was published, its results are reported below only where needed for comparison purposes, and in cases where results apply to the current design.

The final report of the previous study contains important background information and justification for criteria and guidelines used in the current study. These aspects of the previous study will be updated and included in the final report of the current study, upon completion.

5.2.4 Final 1:8 Scale Model (AECOM 2009)

A new 1:8 physical model study was constructed in Redmond, Washington, by ENSR. During the modeling process, the company changed names to AECOM. The final report documenting the 1:8 modeling is referenced AECOM 2009. The results from this modeling were used to finalize the design of the fish passage facility.

As with the previous model, the final modeling included elements of the fish passage facility and a small portion of the forebay. The physical model included: a trash rack; five fixed

collectors (in place of the old single vertically adjustable fish collector horn and dewatering screen); and a common wet well, into which each collector emptied. In addition, each collector also had a fish bypass conduit discharging into a single fish well (common to all 5 collectors). The model also contained the lower part of the wet well, including the AWC entrance. Elements of the existing flood control outlet works were not included in the 1:8 scale model.

The objectives of the 1:8 model investigations were to evaluate and modify (as necessary) the facility components and ensure hydraulic design criteria were met. The models were used to quantify and improve hydraulic performance of the fish collector horn, screen and screen enclosure, and collector bypass. The study was conducted in three phases: preliminary studies, modification testing, and documentation testing. As with the previous study, preliminary tests were generally qualitative (dye tests) and were used to identify any obvious design deficiencies; where deficiencies were noted, modifications were conceived and briefly tested. When either preliminary or modifications testing showed promising results, more detailed tests were conducted for performance documentation purposes.

Design changes to the fish passage facility were incorporated into the physical model when feasible. Changes that were not feasible, such as the realignment and shape of the fish bypass, were tested for losses to determine the sensitivity of not updating the physical model.

A number of tasks were executed using the 1:8 model and are reported in detail elsewhere (references ENSR 2004 through ENSR 2006, and AECOM 2009). These tasks are summarized below.

5.2.4.1 Collector Horn Performance

Preliminary qualitative analysis using dye tests showed good performance, and limited mapping of velocity profiles by Laser Doppler Velocimeter (LDV) confirmed design performance and demonstrated that further design optimization would allow the collector to meet design criteria and guidelines discussed in Section 1.11, Fish Passage Criteria and Guidance and in Section 5.1, Hydraulic Design Criteria.

5.2.4.2 Screen Performance

Preliminary dye testing suggested stable flow in the vicinity of the screen and guide walls. LDV measurements were obtained over the screen and revealed excessive normal velocities over the downstream part of the screen. The high normal velocities resulted in velocity distribution parameters that did not meet established guidelines (5.1) and were considered an indication of unacceptable fish impingement potential. Modifications to the screen were systematically conceived and tested.

In both the previous study and the current study, the screen enclosure and screen assembly were modified to force more flow through the upstream end of the screen by installing a series of porosity plates on the back (downstream) side of the screen frame. A number of porosity plate arrangements were tested in both studies, in addition to other alternatives that were rejected (e.g., a tilting floor arrangement in the previous study).

Documentation tests for the previous study (ENSR 2003a) revealed that the selected porosity plate arrangement nearly achieved the desired effect of more uniformly distributing the flow field through the screen. However, that arrangement did not completely meet design guidelines, and resulted in an undesirably large head loss across the screen. The design discharge head loss was two to three times higher than designers had assumed and it is doubtful that the modeled support frame was large enough to resist prototype forces for such an arrangement.

Screen and screen enclosure variables tested in the present model study included: changing screen type, changing (and mixing) screen orientation, modifying screen enclosure geometry, including dropping the enclosure floor, and revising the design of the screen frame support structure to include flow vanes (tests summarized in References ENSR 2005 through ENSR 2006).

One screen enclosure configuration was selected for continued design development. It most closely met the hydraulic guidelines and criteria evaluated during screen enclosure optimization testing. The selected configuration includes the following elements: perpendicularly-oriented Hendrick B-69 profile bar screen (bar width and bar gap 0.069 inches (1.75 mm)) backed by perforated plate, varying in porosity from 15% to 33%, with screen enclosure floor dropped 18 inches.

Acceptable flow velocity distribution in the vicinity of the screen was achieved in the new 1:8 model study with significantly less headloss compared to the previous model study (headloss reduced from about 14 feet to about 5 feet). The lower headloss is attributable to a lower, more open floor design in the new configuration (dropped 18 inches downstream of the fish screen), and revised enclosure geometry associated with the new dual collector system.

The screen enclosure configuration selected for further development is not the configuration with lowest headloss. Lower headloss with equal velocity distribution probably could be achieved by using parallel bar screen backed by perforated plate, rather than the selected perpendicular orientation. However, recent studies and years of operational experience with similar screens (McNary Dam juvenile fish facility primary dewatering screen (ENSR 2003a, Chapter 2.3) have shown much better debris shedding with perpendicular screen orientation. Good debris shedding is important because it is likely to result in less frequent backflushing, more continuous fish facility operation, and better conditions for juvenile fish.

It should be noted that headloss across the selected perpendicular profile bar / perforated plate assembly is concentrated on the perforated plate, rather than the profile bar screen. Thus, fish are not directly exposed to the higher flow velocities associated with the head loss across the perforated plate.

There was no indication of noise and vibration characteristics of the configuration described above. Noise and vibration will continue to be monitored during the prototype testing. The design team has recommended beveling the perforated plate openings to reduce the chance of noise and vibration.

5.2.4.3 Debris Cleaning

Extensive qualitative and quantitative test were run on the screen to determine the impact of debris loading on the screen. Debris tests determined accumulation patterns, head losses associated with debris accumulation, screen rotation effectiveness on cleaning, and changes of near surface velocity distributions due to debris.

Scaling debris was difficult since the model is scaled at 1:8 and the screen itself is 1:1. It is also unclear what type of debris and buoyancy is to be expected. Synthetic materials of nearly neutral buoyancy were used to represent sticks, needles and grasses, and leaves. Debris was release from various locations directly in front of the collector.

Debris accumulation patterns (Figure 5-1) were repeatable throughout testing. Results showed that Panels 1 and 2, the upstream panels of 8 total, accumulated the least amount of debris. Panel 4, near the middle of the screen, consistently accumulated the most debris. Panel 6 had the largest difference from right to left, with nearly twice the accumulation on the left side versus the right side. The type of debris was similar on each panel, and leafy debris resulted in the largest blockage of screen area. Leaves and needles tended to stick to the screen as soon as they made impact. Sticks did not stay on the screen after first impact, and were more susceptible to sweeping velocities. Sticks would slide and roll before settling at a final location typically oriented perpendicular to the profile bars.

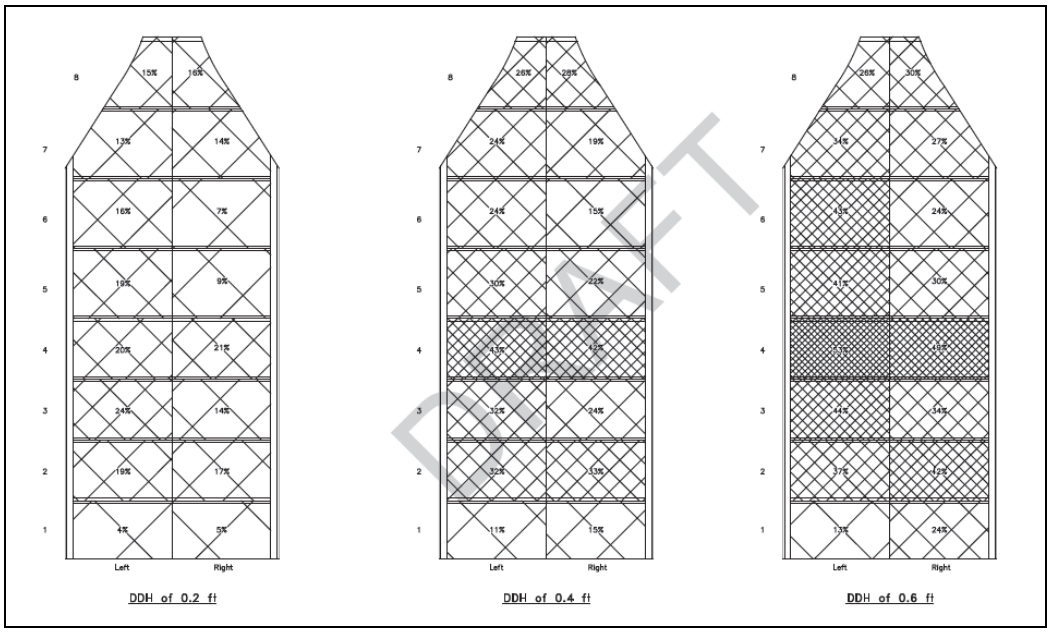

Figure 5-1: Typical debris accumulation by panel for varying head losses.

Forebay to wet well headloss values were monitored as screen blockage rates varied from 12 to 42 percent. The increase in headloss for 12 and 42 percent blockage rates was 0.13 and 0.83 feet respectively. After the screen was significantly blocked, screen rotations were incorporated to determine cleaning efficiency. It was found that debris began to clear at a neutral screen position and that most debris had cleared by a position of -6.7 degrees. More debris observations will be made during prototype testing, but it is likely that the screen will not need to

be completely rotated during cleaning cycles. This will limit the time that fish could pass directly to the wet well and would not be collected in the fish well.

Finally, typical debris blockage patterns were used to measure near-screen velocities, and to determine when values may affect fish survival. Since velocity profiles will not be able to be determined for the prototype, this testing was extremely valuable in that it correlated an increase in head loss to a point at which screen blockage percentages are unacceptable. Testing showed that a maximum increase in head differential for a screen with 600 cfs total flow should be approximately 0.5 feet.

5.2.4.4 Screen Cleaning Position, or "Backflush Position"

As with the previous design, the current screen is to be cleaned by rotating the screen about its transverse axis. Documentation testing was performed in the previous model in order to identify the effects of this operation on the bypass rating curve. The tests revealed a lower collector flow head loss for a given discharge than the standard operating position. However, the effect on bypass discharge was larger; it was cut by more than half for a given head differential (pool to the fish well), compared to the normal operating screen position.

The screen design leaves a gap between the screen and the ceiling while in the backflush position. Numerical modeling of the current design showed that the gap still resulted in decreased bypass flow, but a positive flow was maintained preventing backflow from the fish well. Physical model verified positive flows through the bypass while the screen was in the full backflush position.

5.2.4.5 Collector Bypass Performance and Rating

The present bypass operating discharge range requirement is 25 to 35 cfs for each of two collectors (70 cfs total). Energy dissipation calculations of the proposed fish well configuration and performance of the model at 70 cfs indicate that the proposed fish well will not exceed design criteria with the increased discharge.

Preliminary dye tests showed acceptable flow at the bypass entrance throat and at the bypass pipe diffuser. Documentation tests in the previous model measured velocity fields within the bypass pipe. In the previous study, a bypass discharge rating was also obtained as a function of total collector discharge in order to discern whether collector discharge had any effect on the bypass rating. The bypass discharge rating agreed well with the predicted rating. Bypass flow exhibited a very small dependence on total collector discharge, though this is not perceived to be an operational issue. Bypass rating curves were developed during the final testing. Velocity profiles were acceptable and the velocity continually increased along the bypass to ensure fish capture.

5.2.6 Model Fish Well

The model fish well (previously termed "fish lock") model was designed and operated by R2 Resource Consultants of Redmond, Washington, (Ramey *et al.* 2001) and were conducted

prior to the 1:8 and 1:15 scale physical hydraulic model studies. The City of Tacoma provided a site and water supply for the model near their water supply intake facility on the Green River. This study was a coupled biological/hydraulic model study where juvenile hatchery fish were introduced into a circular tank. Evaluations were conducted at both approximated bulk flow Froude scale as well as prototype velocities. Fish stamina, physical stress, and latent mortality were evaluated. Fish injury was near 0 percent, and latent mortality did not occur. Though the model was not, in the strict sense, completely representative of the then proposed design, the findings imparted a sufficient amount of information such that the design team and Fish Passage Technical Committee members reduced the fish well footprint to a 15-foot by 15-foot square. As noted previously, the present design allows for a 19-foot x 17-foot well with prototype discharge on the order of 25-70 cfs.

Recommendations called for sufficient design flexibility such that baffling or other refuge-providing features might be easily incorporated into the prototype should operation reveal issues that necessarily could not be anticipated a-priori. Such flexibility is inherently reduced with the present method of hoisting the fish out of the well, since the hoisting basket must remain in contact with the fish well walls throughout its range of travel, as opposed to the then proposed scheme of drawing down the fish well water surface and discharging fish through a low-level bypass pipe.

5.2.7 Torque Testing

The modeling contract was modified during design to use the physical model to estimate torque on the screen during a screen cleaning rotation (AECOM 2009, Appendix G). The screen was rotated manually by a 3-foot-long wooden handle connected to the screen shaft with a torque cell. A potentiometer was also attached to the setup to determine the position of the screen. Torque measurements were taken for 300 and 600 cfs flows through a clean screen, 25 cfs through the bypass, and screen rotation times of 10 and 20 seconds.

Additional tests were taken to determine maximum torque conditions. In these tests, the upstream half and downstream half of the screen was completely blocked. Steady rotation rates of 10 to 30 seconds were used. The maximum torque conditions revealed that worst case conditions could exceed the torque capacity of the screen design. To prevent failure during operation, the screen will incorporate automatic screen cleaning rotations based on head loss across the screen and emergency relief mechanisms.

5.3 HYDRAULIC DESIGN

5.3.1 Trashrack Design

The facility must be designed to either exclude or accommodate any debris that gets past the existing reservoir log booms. In general, there are three waterborne debris size classes of concern: (a) large debris, such as tree snags and stumps, (b) smaller debris, such as tree limbs,

sticks; bottles, and other flotsam, and (c) fine debris, such as fir needles and tree leaves. Debris will exist throughout the water column; most will be borne near-surface. Bed load material is not expected to pass into the facility, and suspended sediment is not expected to present unusual operating issues assuming deposited sediment does not significantly increase above the 1135 foot elevation of the flood control tunnel invert.

EM 1110-2-1602 (USACE 1991) requires a trash rack to exclude debris that can cause damage to devices downstream of it. This is problematic; while the trash rack is designed to exclude most debris, fine debris will pass the trash rack. That portion of it which collects upon the inclined screen will decrease the available flow area through the screen, which increases the pressure drop across the screen, thus increasing the load. Any attempt to purposefully screen fine debris would necessarily prevent fish from entering the facility. Therefore, pressure sensors will be placed within the screen enclosure in order to indicate excessive debris loading, and the screen will be rotated to flush the debris off of the screen. In extreme instances, such as a rapid plugging of the screen, facility flow shut-off will be accomplished by closure of the radial regulating gate or emergency gate. These features are discussed elsewhere in the hydraulic design, mechanical design, and structural design chapters of this report.

The trash rack extends from el. 1060 to el. 1181 feet and is composed of three elements: columns, beams, and grating inserts. The trash rack spans a width of 36 feet 4 inches, with two columns spaced 6 feet 2 inches about the entrance centerline. Nine horizontal beams at equal spacing span the height. Hydraulic engineers at the Corps' Portland District have noted that turbulence and flow separation may disorient juvenile fish and delay their passage through trash racks. The columns and beams were streamlined in order to minimize turbulence and flow separation. These elements taper in section from rounded "nose" to rounded "tail". Dimensional guidance was extended from a Federal Highway Administration publication regarding bridge pier hydraulics (FHWA 1995) and applied to beam and column design such that, in the direction of flow, member lengths would be less than four times their nose width, with a rounded tail diameter of two-thirds the nose diameter. The performance of these elements was not specifically evaluated in previous model studies, but no adverse performance issues were noted. The trash rack members are designed to accommodate steel insert panels consisting of 1-inch flat bar placed in a 6-inch by 18-inch grid. The net porosity of the panel grid is 81 percent. The grid is dimensioned to exclude most smaller floating debris types that might otherwise pass the struts and obstruct the 3-foot by 1.25-foot fish bypass conduit entrance.

EM 1110-2-1602 mandates that trash racks withstand loads manifest for the 50 percent blocked condition. Unbalanced hydraulic loads were evaluated (see Appendix I) for two types of conditions: (1) completely blocked over 50 percent of the water column at the trash rack, and (2) uniformly blocked over the entire area. The first condition was evaluated as a weir flow type situation. Results indicate that control will not shift to the trash rack for this scenario, as the required heads of 3.6 feet and 5.7 feet for discharges of 600 cfs and 1,200 cfs, respectively, are less than that available. The second condition was evaluated using the orifice equation with a contraction coefficient of 0.6. This scenario yields an unbalanced hydraulic load of 0.26 feet at 1,200 cfs with average contracted velocities of 4.1 ft/sec and, by continuity, velocities on the

order of 2.4 ft/sec at the grid face. A nominal unbalanced hydraulic load of 5.0 feet and impact velocities of 2.5 ft/sec were assumed for design purposes.

Debris management must be a high priority operational mandate. Debris will be removed from the trash rack annually following the flood control season. Periodic cleaning will take place during the operating season to avoid excessive collections of debris that would mobilize forces approaching or in excess of those designed for. Excessive conditions will be monitored using a pressure sensor that will be located within the entrance well so that the water surface differential between the pool and wet well will be known. Debris removal will be completed using a gantry crane on top of the facility to remove or rake large debris that collects upon the trash rack and entrance invert.

5.3.2 Entrance Well

The entrance well exists between the trash rack and the collector array. The entrance well is separated from the wet well by the collector array and the operating bulkheads. The entrance well contains the dewatering stoplogs and the fish well/wet well refill intake, and is designed for a smooth transition from the trash rack to the upstream end of the fish collector array. The invert of the entrance well is at el. 1060 feet.

5.3.3 Dewatering Stoplogs

Dewatering stoplogs will be used so that the facility can be dewatered for annual maintenance and other purposes. Annual maintenance will occur during the fall and winter seasons when the pool is drawn down for the flood control purpose and fish passage facility operations are suspended. The stoplogs rest within a slot in the entrance well and will be lowered and raised by a crane on rails residing atop the facility. There are ten stoplogs, nine are 10 feet high and one is 9 feet high, that are placed at an invert el. of 1060 feet. They will be placed to el. 1169 feet, which represents the Phase 1 pool conservation pool elevation pool plus 2 feet. It is possible then that stoplogs may be used to dewater the facility if necessary during times other than during the flood control season. Elevation 1169 is approximately the 4 percent annual maximum flood control season exceedance elevation based on the period of record 1963 to 1996.

5.3.4 Wet Well

The wet well is located between the collector array and the fish well. The wet well surface is open to the atmosphere. There are multiple inlets to the wet well, including the fish collector array and a refill pipe, and there are two outlets: the attraction water conduit and the monitoring facility water supply intake. During fish passage operations, the wet well receives flow from the fish collectors, which then passes through the AWC to the flood control tunnel (FCT) thence downstream to the river below the dam.

The monitoring facility water intake was placed within the wet well so that the monitoring facility supply water would be obtained from the same stream of water in which

collected fish had entered the facility. The intake is a wall-mounted tee-screen and is not expected to promote deleterious flow conditions within the wet well. This feature is described in Chapter 10, Mechanical Design.

5.3.5 Wet Well Refill Pipe and Features

The wet well will be seasonally dewatered for maintenance. It is necessary to use a dedicated refill pipe and valve in order to refill the wet well. The wet well must be refilled in order to remove the dewatering stoplogs and to begin fish passage operations. This 10 inch diameter pipeline draws water from the entrance well at el. 1072.5 feet. Mechanical details of the refill piping system will be found in Chapter 10.

5.3.6 Fish Collector Array

The fish collector array consists of five geometrically identical fish collectors set one upon the other in a vertical column. A fish collector is a single assembly composed of two primary elements: (1) a collector horn, (2) and an inclined screen and enclosure. Appurtenant features include an attached operational bulkhead unit and fish bypass pipes.

A fish collector operates in a submerged condition at variable pool elevations. A single collector, or as many as two adjacent collectors, may be operated at a given time depending on the pool elevation and the fish passage facility discharge. It is possible to operate two non-adjacent collectors should the need arise. Water flows into the collector horn and passes into the screen enclosure. Fish and a small portion of water pass above the inclined screen and into the fish well via the fish bypass pipe. The remaining water passes through the screen and into the wet well. A radial gate in the bottom of the wet well regulates discharge through the collector horn.

The vertical spacing and height of the array was established by arguments relating to debris entrainment and the depth near-surface fish may need to sound to enter a collector.

The performance of inclined screens suffers when debris accumulates upon them. Fir needles, twigs, and other entrained flotsam reduce the available screen area for flow, increasing head loss through the screen and therefore the force the screen is required to withstand. Some authors (Amaral, S.V. *et al.* 1999) cite increased fish injury or mortality to debris accumulation. While measures are in place to both sense the presence of and clean debris from the screens, it is desirable to avoid collecting it. Much of the fine debris in a reservoir resides on the water surface. A phenomenon known as a vortex (or roughly, “whirlpool”) is one mechanism that can draw surface material into the collector. A vortex may be set up if adequate submergence is not provided for a desired discharge, and a strong vortex could pull debris into the collector. In general, the higher the discharge, the greater the submergence required to prevent vortices.

Another design objective was to place the collector as close to the surface as possible in order to minimize the distance that fish near the surface would have to sound in order to access it. This objective is at odds with the vortex suppression objective, as vortex avoidance is improved as the depth of the intake increases. Submergence depth then was a notable consideration for spacing the collector array. Because the highest collector (collector number five) is in operation

for the longest period of time with a fixed pool elevation concurrent to a significant portion of the anticipated downstream migration window, the design approach was to identify the required submergence for the purposes of vortex avoidance, evenly space the remaining four collectors beneath it, and determine how far fish would have to dive for the Phase 1 and Phase II pools.

In keeping with standard conventions, submergence depth here is defined as the vertical distance from the entrance well to the top of the screen enclosure. Plate C-35 was adopted from EM 1110-2-1602 to estimate required submergence depth for a discharge of 600 cfs. The axi-symmetric approach curve was used as recommended by the manual. With the enclosure width x depth being 11.0 feet x 9.1 feet respectively, the design curve suggests 7.24 feet submergence is required. The top of the enclosure was set at approximately el. 1160 feet. This is about 3 inches (4 percent) less submergence than suggested by the guidance.

Minimum fish diving depth for this configuration at Phase II pool is 17 feet. Plate C-35 is intended for single entrances, but there will be times during which the top two collectors are operating at approximately 600 cfs each. Vortex performance cannot be verified from the data shown therein and the required prototype vortex avoidance submergence depth is uncertain. Further uncertainty arises from the fact that approach flow characteristics of horizontal intakes tend to be as or more important as conditions within the intake itself with respect to vortices (Hecker 1984). Physical hydraulic model studies will be used to learn whether vortices will set up in the top collector(s) for single and dual collector operations at maximum discharge. Anwar's criterion (Ranga Raju and Garde 1987) indicates that the 1:8 physical model should reveal vortices if they are to be present in the prototype. The model studies program is designed to reveal the presence of vortices and results may be used to guide operations to achieve adequate submergence of the top collector as necessary.

5.3.6.1 Collector Horn

The collector array consists of five identical collectors. The contracting collector entrance between the screen enclosure and the operating bulkheads is called the 'collector horn.' The horn is 16 feet long and is designed to provide for a constant rate of change of mean velocity of no more than 0.3 ft/sec/ft at a discharge of 600 cfs (i.e., dV/dx = 0.3 ft/s/ft, per criterion). It was also prescribed that the average velocity at the entrance of the horn be 2 fps at 600 cfs per collector, with average velocity at the downstream end of the horn (upstream end of the inclined screen enclosure and screen) being 6 fps. These criteria were interpreted through one-dimensional arguments to mean that the cross-sectional area of the collector horn must be continuously changing in the direction of flow by the relation

*Area = Discharge / (0.3 ft/s/ft*x + 2ft/sec)* *Units ft^2*

where discharge = 600 cfs and x is the distance in feet in the direction of flow from the upstream end of the horn. A number of geometries may satisfy this relationship, and both circular and rectangular geometries were developed. At present, a simple elliptical curve (USACE 1980, Plate C-22) defines the horn entrance elevation geometry, and noting that at any cross-section the area is equal to the width times the depth, the preliminary entrance sidewall shape was determined by appropriate substitution using the equation above. The resultant sidewall expression is essentially linear over most of its length, excepting an abrupt expansion within the initial foot of the entrance

that results computationally from the rapid rate of change in entrance depth due to the elliptical surfaces; the abrupt sidewall expansion was deleted as it is deleterious to the fish passage purpose and it's absence does not significantly effect desired performance. A linear expression then was fit to the theoretically derived curve, with the downstream end of the sidewalls joined to the parallel sidewalls of the screen enclosure by a horizontal curve. These modifications simplified the descriptive geometry of the collector horn while meeting the rate of velocity change criterion. Similar modifications were shown to result in satisfactory flow patterns in previous model studies (ENSR 2003). Collector horn flow profile performance will not be specifically evaluated in future model studies.

5.3.6.2 Screen Enclosure and Inclined Screen

The next element of the fish collector assembly is the screen enclosure. The screen enclosure houses the inclined screen and is rectangular in section, 11.0 feet wide by 9.1 feet tall at the entrance, transitioning to 10.6-foot height by way of a floor step near the upstream of the screen. The step is greater than the clearance required for the underlying screen support structure. The extra drop improves downstream flow characteristics and uniform screen velocities. The screen enclosure is nearly 27 feet long. In accordance with the 6 fps capture velocity criterion, the average velocity at the entrance to the enclosure is 6 fps at the nominal design discharge of 600 cfs per collector.

The enclosure houses the screen assembly, a profile bar screen and supporting frame inclined 17 degrees to the horizontal in the direction of flow. The upstream end of the screen is to be flush with the floor at the enclosure entrance. The screen is nearly 27 feet long and terminates 1.25 feet from the top of the screen enclosure at the fish bypass entrance.

The proposed screen material is referred to as a B69 profile bar screen, with a bar top width of 0.068 in and bar spacing of 1.75 mm for a gross (not including U-clips) screen porosity of 50 percent. The profile bar screen is stainless steel. The screen material is the same type of screen as studied in the 1:8 scale physical model. The primary consideration in selecting this screen type was porosity, as previous model studies (ENSR 2003a) results demonstrated a necessity to recruit more flow through the upstream end of the screen. The screen conforms to all dimensional guidelines and its performance is being evaluated in ongoing physical hydraulic model studies.

Guide walls will be installed in the roof of the inclined screen enclosure in order to transition the area above the screen to the 3-foot x 1.25-foot bypass entrance. The guide walls extend from the sides of the inclined screen enclosure and converge to the bypass at a rate of 1.5 feet in the transverse direction for every foot in the longitudinal direction. The screen butts up against the sloping bottoms of the vertical guide walls. A short horizontal curve joins the guide walls to the bypass. More details on the fish bypass are to be found below.

5.3.6.3 Fish Bypass

Water, fish, and debris passing over the inclined screen will enter the fish bypass and be transported in a pressurized flow regime into a fish well. At the downstream end of the inclined

screen, the fish bypass entrance is 3 feet wide by 1.25-feet-high, and transitions over a distance of approximately 3 feet to a circular cross-section.

A diffuser is integrated into the discharge end of the bypass in order to reduce the bypass flow jet velocity prior to entering the fish well. The diffuser is of non-conventional design in that top elevation remains constant while the bottom is flared. The diffuser is 5 feet long and the maximum area of the diffuser is approximately 4.8 feet. The diffuser will reduce the average bypass velocity on the order of 20 percent.

Each bypass has a slide gate at its fish well terminus. The gate will only be operated in the fully open or fully closed position; the gate in the fully open position will not obstruct the fish bearing flow path. The purpose of this gate is to only allow bypass discharge to the fish well via operating collector horns.

Discharge through the bypass is a function of the head differential between the entrance well and the fish well. Average bypass velocity will vary between 6.7 ft/sec and 9.3 ft/sec over an operating discharge range of 25 to 35 cfs. Valves within the fish well drain lines will regulate discharge through the bypass. Sensors that can reliably describe the head differential between the entrance well and the fish well will be required in order to maintain constant discharge through the fish bypass. Additionally, discharge measuring devices may be placed on the fish well drainage outlets.

The fish bypass rating curve (Figure 5-2) was developed using Bernoulli's equation and is assumed to be independent of collector discharge. This is a reasonable assumption in that model studies for the previous design showed that bypass discharge would vary on the order of 8 percent over a collector discharge range of 475 to 1,275 cfs. It is also assumed that the bypass discharge rating holds regardless of the number of collectors operating, or whether two bypasses discharge to the same fish well. These are reasonable assumptions. The present collector discharge operating range is about twice that evaluated. The present bypass design should exhibit about 70 percent of the head loss for a given discharge as the previous design. The computed bypass rating curve is shown below.

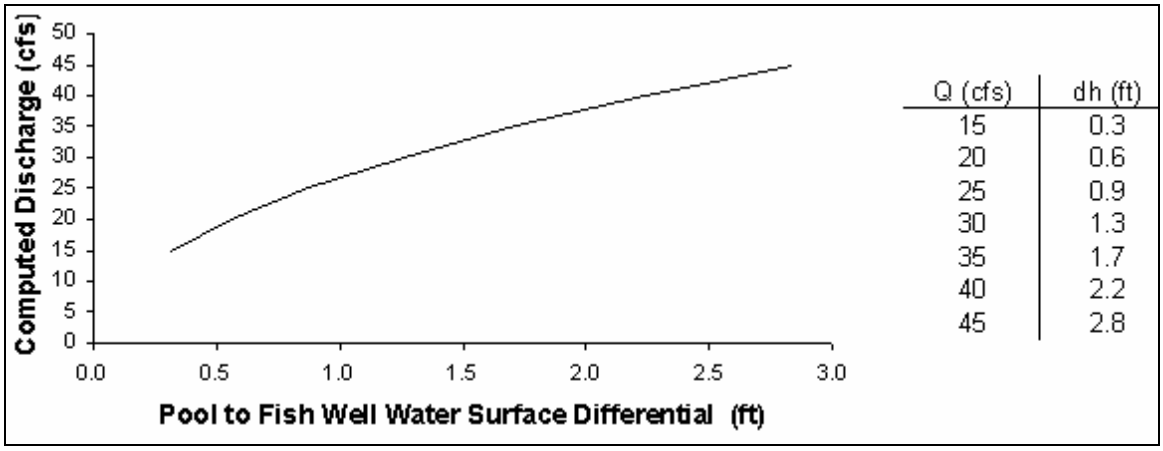

Q (cfs)	dh (ft)
15	0.3
20	0.6
25	0.9
30	1.3
35	1.7
40	2.2
45	2.8

Figure 5-2. Computed bypass discharge rating curve.

Discharge through the bypass is intended to be constant and equal to fish well outflow; however, there will be departures from the steady state condition whenever there are perturbations in the water surface differential between the fish well and reservoir water surfaces. According to model results, the fish well bypass discharge decreases during a screen cleaning rotation. There is not a need to close the bypass valve or the fish well drain since backflow does not occur in the bypass.

5.3.6.4 Fish Collector Hydraulics Overview

Facility discharge is regulated by the radial gate, excepting bypass flow, which is governed by the water surface differential between the pool and the operating fish well. Discharge passing the radial gate must pass through the collectors. In doing so, the flow imparts hydraulic loads on the inclined screen. The loads experienced by the screen are primarily dependent upon facility discharge and the amount of debris that has may be present upon the screen.

During single collector operations, all flow passing the radial gate must pass through a single operating collector. The presence of debris upon the screen will impart additional head loss to the flow, hence an additional load on the screen, and slightly reduce the flow rate through the facility.

During dual collector operations, facility discharge is split between two collectors, with the relative flow rate through each collector varying depending primarily upon the debris present on either or both screens. When both screens are clean, and neglecting temperature effects, the flow split between adjacent collectors is approximately equal; when non-adjacent collectors are being operated, the lower collector would pass approximately one to five percent more flow than the upper collector, the discrepancy increasing as the distance between operating collectors increases. The accumulation of debris upon one screen will tend to throttle the flow through it, resulting in a commensurate increase in discharge through the other clean screen. Both screens would experience an increased load. The reduction in total facility discharge would be somewhat less in this case as compared to that due a single collector operation for a given percentage of debris obstructed screen area.

In both cases, the operational response to debris accumulation would be clean the screens by rotating them to the back-flush position. The presence of debris upon the screen may be discerned in a variety of ways, however, the simplest approach would be to check the water surface differential from the reservoir pool to the wet well and compare it to the clean screen differential for a given discharge. When two collectors are operating, this practice would not reveal whether one or both collectors are impaired by debris. The only way to tell which collector is obstructed would be to measure the discharge passing each collector; the obstructed collector would be the collector passing a lower than expected discharge for the given pool to wet well differential. Theoretically, one could then rotate the obstructed screen. However, it is recommended that if, during dual collector operations, one screen becomes obstructed, that both operating screens be rotated. The rationale for this recommendation will be made clear in following sections.

5.3.6.5 Fish Collector Hydraulics

Preliminary design velocities and pressures throughout the fish collector were estimated using Bernoulli's one-dimensional energy equation and forces were estimated using the impulse-momentum equation.

A screen loss coefficient of 7.0 was estimated from the preliminary testing program results of the 1:8 scale physical hydraulic model studies (ENSR 2003a) and used for design purposes. Trashrack, skin friction, screen support frame, and guide wall losses are treated as lumped into the screen loss coefficient. An exit loss coefficient of unity was assumed to apply for both single and dual collector operations. Results from the previous 1:8 scale model tests, where porosity plate was used to obstruct and thus re-distribute screen flow, were also employed as surrogate data to predict the effect of debris blockage, as percent of screen obstructed, on the screen loss coefficient and results are shown in Table 5.1. As the collector design, and screen type have been modified since the prior 1:8 model studies, physical hydraulic model studies of the revised design will be used to identify clean-screen system loss coefficients for final design purposes.

TABLE 5.1 ASSUMED SCREEN LOSS COEFFICIENTS

% blocked	Ks
0%	**7.0**
35%	**9.9**
43%	**11.3**
53%	**13.0**
60%	**15.5**

The relative discharge through each of two operating collectors in the absence of debris (clean screen) were computed using the 1-dimensional energy equation between the pool and the wet well. Two methods were used: one employing standard bend, exit, and obstruction loss coefficients, and another method based on the theory of combining manifolds as presented by Miller (1978). The first method is solved directly, and the combining manifold theory requires an iterative solution, as the loss coefficients are a function of discharge. These methods yield approximations of the expected flow split for comparative purposes, but due to the relatively low velocities within the collectors and the wet well, the uncertainty in application here is not intractable. It was assumed that collectors 1 and 5 (the bottom and top collectors) were operating simultaneously, thus rendering a conservative (within the confines of the selected methods) estimate of the maximum flow discrepancy between operating collectors. Temperature stratification in the reservoir, which can influence the flow rate through collectors, was neglected but is addressed in following sections. The standard method suggest that the relative flow through each of two operating collectors would be within one percent of the other over the entire operating range, while the combining manifold theory suggests a 588 cfs – 612 cfs flow split (4% difference) at maximum discharge of 1,200 cfs. In either case, the flow discrepancy would be reduced as the space between operating collectors is reduced. The small discrepancy is due to the

low velocities and low head loss predicted in the wet well. Computations and results are shown in Appendix I. Actual performance will be verified in future 1:8 physical model studies.

Debris has a more profound effect on the head loss and flow split between collectors. The effect of debris on collector discharge and head loss was estimated using the 1-dimensional energy equation with standard loss coefficients and screen loss coefficients given in Table 5.1. The predicted head loss versus percent of screen blocked is shown in Table 5.2. These values would apply to a single, partially obstructed screen, or approximately to each of two operating screens with the same amount of obstruction. Table 5.3 shows the predicted flow split between two collectors when one collector's screen is clean, and the other collector's screen has become obstructed. For situations where both screens are partially, but not equally, obstructed with debris, the flow discrepancy would be less than that implied in Table 5.3 and the water surface differential between the pool and wet well would tend to that reported in Table 5.2. Spreadsheet computations are shown in Appendix I.

TABLE 5.2 SINGLE COLLECTOR HEAD LOSS DUE TO SCREEN OBSTRUCTION

		Head Loss through enclosure to Wet Well in Feet				
		Unblocked	**35%**	**43%**	**53%**	**60%**
Q (cfs)	V (fps)	screen				
200	2.0	0.5	0.7	0.8	0.9	1.0
400	4.0	2.0	2.7	3.0	3.5	4.1
600	6.0	4.5	6.1	6.8	7.8	9.2
700	7.0	6.1	8.3	9.3	10.6	12.5

TABLE 5.3 COLLECTOR FLOW SPLIT DUE TO SCREEN OBSTRUCTION

	35% blocked		43% blocked		53% blocked		60% blocked	
Qtotal (cfs)	Qa (cfs)	Qb (cfs)	Qa (cfs)	Qb (cfs)	Qa (cfs)	Qb (cfs)	Qa (cfs)	Qb (cfs)
600	323	277	332	268	342	258	354	246
800	431	369	443	357	456	344	472	328
1,000	539	461	553	447	569	431	589	411
1,200	646	554	664	536	683	517	707	493
1,300	700	600	719	581	740	560	766	534

NOTE: Qa represents flow through the unblocked screen, Qb through the partially blocked screen.

While the nominal design discharge is 1,200 cfs, being 600 cfs per collector, Table 5.3 shows that the discharge per collector can exceed the nominal design value should one of two operating collectors become encumbered by an obstruction. The nominal discharge may also be exceeded by a rise in pool. For instance, say the regulating gate is set to pass 1,200 cfs. Should the pool rise and the gate setting remain unchanged, the total facility discharge will increase.

5.3.7 Fish Well

Fish enter the fish well through a collector bypass pipe. A basket, similar to a colander in function, is located in the bottom of the fish well. The basket in this position serves as a physical barrier to prevent fish from entering the well drain and valve network. The basket will be hoisted through the water column when given time or fish density thresholds (undetermined at this point) have been met, collecting fish and a small portion of water as it rises up and out of the fish well. The fish will be discharged into a monitoring facility. The fish may be extracted and monitored, or may be transported downstream via truck. The monitoring, storage, and truck-and-haul facilities were designed by FishPro, Inc., of Port Orchard, Washington, and are discussed in Chapter 12.

At the beginning of the annual reservoir refill cycle, the fish well is empty. The fish well must be filled concurrently with the wet well prior to initiation of fish collection operations. The fish well refill piping is connected to the wet well refill piping system that withdraws water from the north wall of the entrance well.

The well is 19 feet long by 17 feet wide with a floor elevation of 1042 feet. The well is approximately rectangular with a plan area of about 315 square feet. The fish well will be receiving on the order of 25 to 70 cfs for the duration of the hoisting cycle. Inflow velocities will be on the order of 5 ft/sec and 7 ft/sec at bypass discharge of 25 cfs and 35 cfs, respectively.

Turbulence levels in the fish well have been an item of concern amongst design team and fish passage committee representatives. Fish well flow attributes have been studied previously in a 1:15 physical hydraulic model study (ENSR 2003a). The facility design at that time called for a 15-foot x 15-foot fish well and single bypass inflow of 25 cfs. Qualitative measures were documented including the use of dye to estimate the depth of turbulence. Laser Doppler Velocimeter measurements were also made. General flow patterns exhibit a slow, counter-clockwise downward spiral due to the asymmetric bypass discharge in conjunction with the well drain. Observations of dye diffusion suggest that an area approximately 20-25 feet or more below the bypass entrance to the well might be considered qualitatively turbulent. This implies that at low operating pool elevations, the majority of the well volume might be considered qualitatively turbulent. Interpretation of results suggested that the pool elevation at which the majority of the volume of the well might be considered qualitatively non-turbulent would be approximately el. 1100. With-project operating rule curves and the generalized fish migration diagrams suggest that this pool elevation should be attained near the beginning of the downstream juvenile migration season for the project as it was then conceived.

While fish well volume has been increased on the order of 40 percent, potential inflow has more than doubled. One hypothesis is that, whenever the lowest bypass discharging into the fish well is that of collector three, or any higher collector, the majority of the well volume will be quiescent. According to the generalized rule curves, this would occur in early to mid March, near the beginning of the juvenile downstream migration season.

5.3.8 Attraction Water Conduit (AWC) and Features

The attraction water conduit connects the wet well to the existing flood control tunnel. Discharge through the facility passes through the AWC and is regulated by a radial gate. An emergency (vertical slot) gate is located just upstream of the radial gate. The attraction water conduit is 5.5 feet wide by 8 feet deep upstream of the radial gate, and of variable height downstream of the radial gate, 5.5 feet wide by 9.5 feet tall being the minimum section, which gradually expands as the invert falls away to the Flood Control Tunnel (FCT).

5.3.8.1 Attraction Water Conduit (AWC)

The AWC conveys flow from wet well to the flood control tunnel. The AWC also receives a small amount water from the fish well in an amount required to keep the fish well water surface constant, that is, 25 to 70 cfs.

The fish transport piping scheme, which has since been abandoned, called for drawing down water in the fish well (hence the previous name, “fish lock”) to an elevation at which fish and remaining fish well water would be released in the free-surface condition into the fish bypass pipe for transport downstream. The invert entrance elevation and conduit section were therefore governed by fish transport pipe hydraulic considerations, as the site layout requires that the AWC alignment run beneath the fish well. Though this transport scheme has been replaced by the fish hoist and trucking scheme, the overall AWC alignment, geometry, and fish well invert as proposed then remain adequate.

Preliminary layouts of the AWC focused on designing the junction according to guidelines in EM 1110-2-1601 (USACE 1991): both channels converging at the same slope and at and angle between channel centerlines of 12 degrees or less, and with nearly equal water depths for joint operation of the FCT and AWC to 4,000 cfs. Subsequent evaluations using HEC-RAS and hand calculations showed the guidelines would be difficult to meet for the conduit and have questionable utility, recognizing that the guidelines were developed for surface water channels and given the curvature flow properties of the existing conduit at the junction and the disparity of momentum between conduit flows during joint operation.

Physical hydraulic model studies were conducted at 1:15 scale (ENSR 2003) to explore conduit and confluence performance over a wide range of individual and conjunctive operating scenarios. A summary of these results is presented in Section 5.2.2 and results are not discussed here except as it relates to AWC design particulars.

The conduit is approximately 151 feet in length, 5.5 feet wide. It is 8 feet and 9.5 feet high upstream and downstream of the radial regulating gate, respectively. The regulating gate is located 60 feet downstream of the conduit entrance. The entrance has a horizontal invert and short elliptical (USACE 1980, Plate C-37) side and roof surfaces.

The entrance invert is at el. 1029 feet and horizontal to the gate sill. Model studies (ENSR 2003) results suggest computed inlet pressure drop coefficients are consistent with those presented in design guidance (USACE 1980). Based on the model study findings, cavitation is not expected to occur at the AWC entrance in the prototype. The floor trajectory of $00107x^2$ begins 1 foot downstream of the sill and extends over a distance of about 60 feet. The trajectory satisfies

equation 5-3 of EM 1110-2-1602. Grade change is accomplished by a 50.0-foot radius circular curve, the radius of the reverse circular curve being about 7 times the depth of the design flow.

The ceiling of the conduit is parallel to the AWC floor to station 5+36.01 AWC in order to facilitate construction. The ceiling extends from that point in a straight line to join the flood control tunnel 14.5 feet above the invert of the flood control tunnel. The intent of entering the flood control tunnel near the soffit is to minimize the obstruction of FCT flow, which super-elevates in the vicinity of the confluence. At very large FCT discharges (estimated to be at or exceeding 10,000 cfs), 1:15 scale model studies showed that water backs up the AWC to the radial gate. The AWC ceiling configuration also provides for this circumstance by ensuring a vented water surface to the radial gate for flood control tunnel discharge exceeding 12,000 cfs.

The attraction water conduit must pass design discharge on the order of 220 cfs to 1,300 cfs and maintain this capability for concurrent total project discharge to 4,000 cfs (2,700 cfs concurrent discharge through the FCT). Model studies results (ENSR 2003) confirm open-channel flow downstream of the regulating gate for these design conditions.

Model studies (ENSR 2003) revealed variable vortex conditions within the wet well over a range of discharge and wet well elevations. The strength and character of the vortices was not judged to be of concern with respect to the radial gate discharge performance or hydrodynamic loading. Theoretic relations used to evaluate the potential of the AWC intake geometry to form vortexes were obtained from Plate C-35 of EM 1110-2-1602 using Gordon's relationships and predicted vortex-free performance of the modeled design. The discrepancy in the model study findings to the predicted vortex potential is not surprising given the departure of the design from that applicable to Gordon's curve. Future model studies will be used to glean insight as to vortex potential for the presently proposed design, as the wet well is significantly more confined in comparison to the modeled wet well configuration.

5.3.8.2 Radial Gate

The radial gate in the AWC regulates flow through the facility. Radial gate geometry is scaled to the existing flood control tunnel radial gate geometry. The gate radius is 14 feet, with a trunnion elevation of 1040.3 feet and an invert seal elevation of 1029 feet.

Radial gate hydrostatic loads were computed according to EM 1110-2-2702 (USACE 2000). There were three loads of interest:

- *H1*, the maximum hydrostatic load. This load was interpreted to be the hydrostatic load imposed by the routed Probable Maximum Flood (PMF) pool elevation of 1224 feet. The associated hydrostatic load is 556.5 kips.
- *H2*, the design hydrostatic load, was interpreted to be the hydrostatic load imposed by the Phase 2 rule conservation pool elevation of 1177 feet. The associated hydrostatic load is 419.4 kips.
- *H3*, the normal hydrostatic load, was interpreted to be the hydrostatic load imposed by the 10-year annual maximum flood season pool elevation of 1152 feet. The associated hydrostatic load is 346.4 kips.

5.3.8.3 Attraction Water Conduit Discharge Rating Curves

The design intent is for gate-controlled operations. Preliminary gate rating curves are based on computations, with the exception of that segment of the un-gated curve derived from model studies (ENSR 2003) shown in Figure 5-3**.** Gate ratings are referenced to the wet well water surface elevation; the ratings may be extended to the pool once (1) acceptable inclined screen and collector arrangements, and (2) the prototype collector discharge-head loss relationship have been identified in physical hydraulic model studies.

Preliminary radial gate control rating curves were computed per direction in EM 1110-2-1602 (USACE 1980) and using Corps of Engineers Hydraulic Design Criteria (USACE rev. 1987) chart HDC 320-3. The computed gate control rating curves are in agreement with model study findings (ENSR 2003) to 6 feet open (75 percent open). The computed 8-foot open curve (100 percent open) is in poor agreement with model study findings, which suggest pressure type flow. There is some question then as to applicability of the computed 7-foot open curve. The 7-foot open scenario will be evaluated in future model studies of the presently proposed design.

The critical depth control portion of the discharge rating family of curves was computed assuming critical depth occurs at the parabolic drop section downstream of the radial gate and directly translating the specific energy of that occurrence to the wet well. No losses were assigned to the short section of conduit upstream of the gate due to the horizontal approach invert and uncertainty as to the representative contributory wet well flow velocity.

Ungated orifice control was computed for the conduit inlet using the orifice equation with a combined contraction/turbulence coefficient of 0.9. It should be noted that the streamlined conduit intake and conduit do not strictly manifest the boundary conditions for which well-defined orifice flow relations exist. However, comparison of the results to 1:15 model study results suggest the orifice equation and the pressure flow equations represent model data as well as the other; neither do so perfectly.

Capacity based pressure flow computations were performed in agreement with design guidance (USACE 1980). The downstream reference location for the plotted results is the vicinity of the gate sill. Comparison to model study results suggests reasonable, though not particularly good, agreement. For sensitivity analysis, pressure flow computations were also performed assuming the downstream boundary is the end of the parabolic drop, which is the location at which the floor begins to drop away from the ceiling. Results suggest that pressure flow would not govern under this assumption.

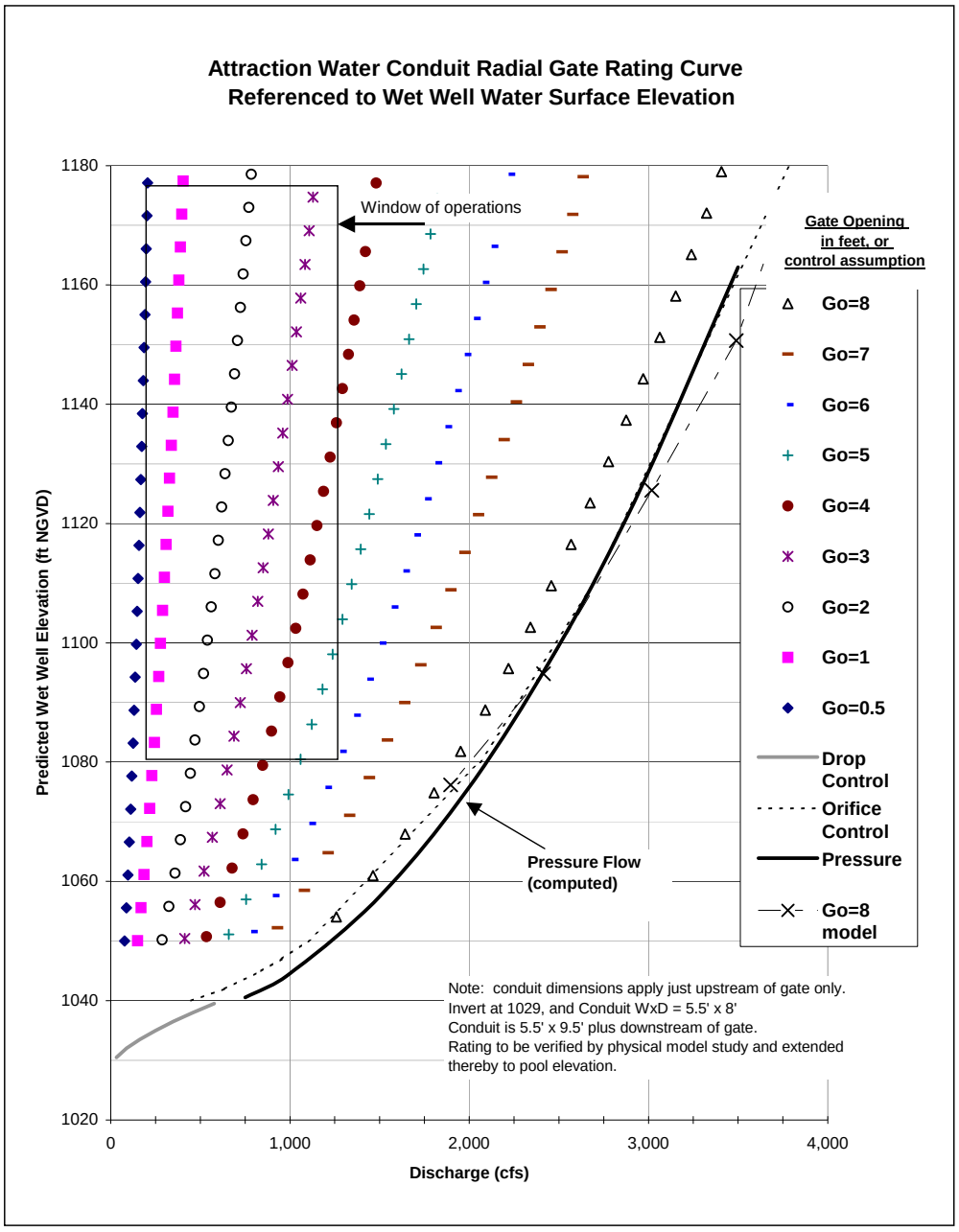

Figure 5-3. Attraction Water Conduit Radial Gate Rating Curve (Wet Well Water Surface)

5.3.8.4 AWC Water Surface Profile

Water surface profiles along the attraction water conduit were analyzed using a physical model using HEC-RAS Version 3.1. Both analyses investigated three operational flow conditions. The vertical datum used for all conditions and procedures is in NGVD. The flow scenarios included:

(1) A discharge of approximately 1,200 cfs at the Phase II storage elevation of 1177 feet which results in a large gate opening with maximum head;

(2) A discharge of approximately 220 cfs at the Phase II storage elevation of 1177 feet which results in a small gate opening with maximum head; and

(3) A discharge of approximately 1,200 cfs at the beginning of operation storage elevation of 1080 feet which results in a large gate opening with minimal head.

The large Froude numbers existing in the attraction water conduit lead to a significant air demand. The water surface elevations predicted by HEC-RAS do not account for air bulking. Computed profile elevations were adjusted using Plate B-50 from EM 1110-2-1601. Water surface elevations predicted from the physical model and from the bulked HEC-RAS computations for the flow scenarios described above are shown in Figures 5-4 through 5-6.

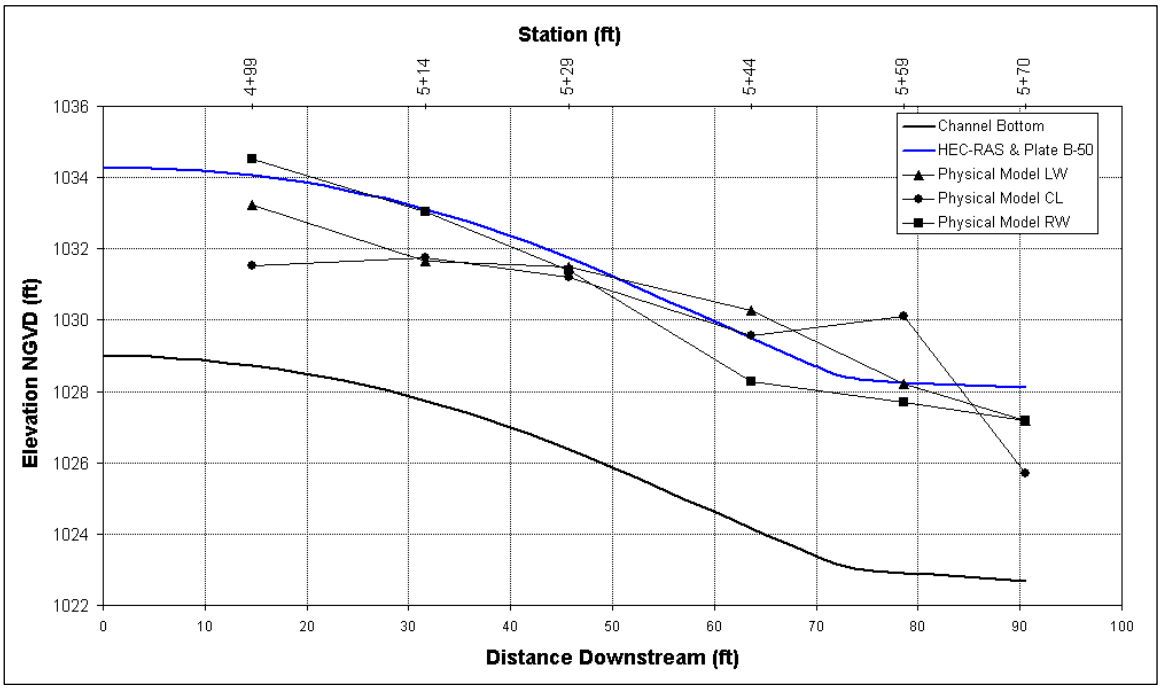

Figure 5-4. Water Surface Profile Predictions Using HEC-RAS and Physical Model Results for Flow Scenario (1)

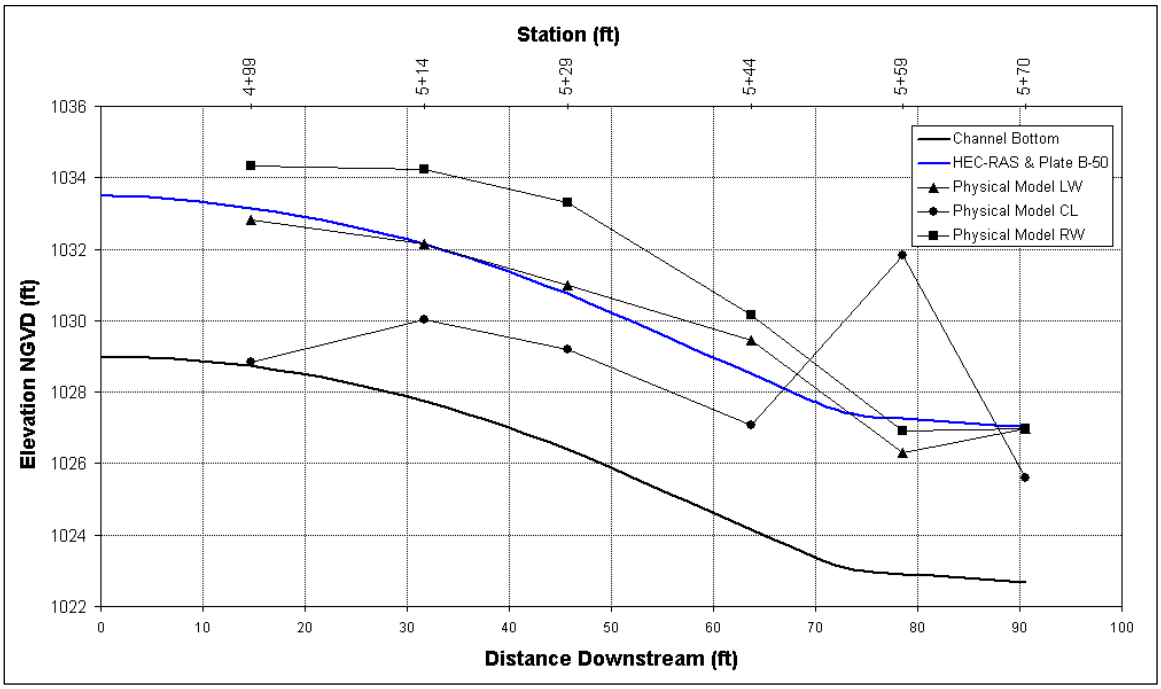

Figure 5-5. Water Surface Profile Predictions Using HEC-RAS and Physical Model Results for Flow Scenario (2)

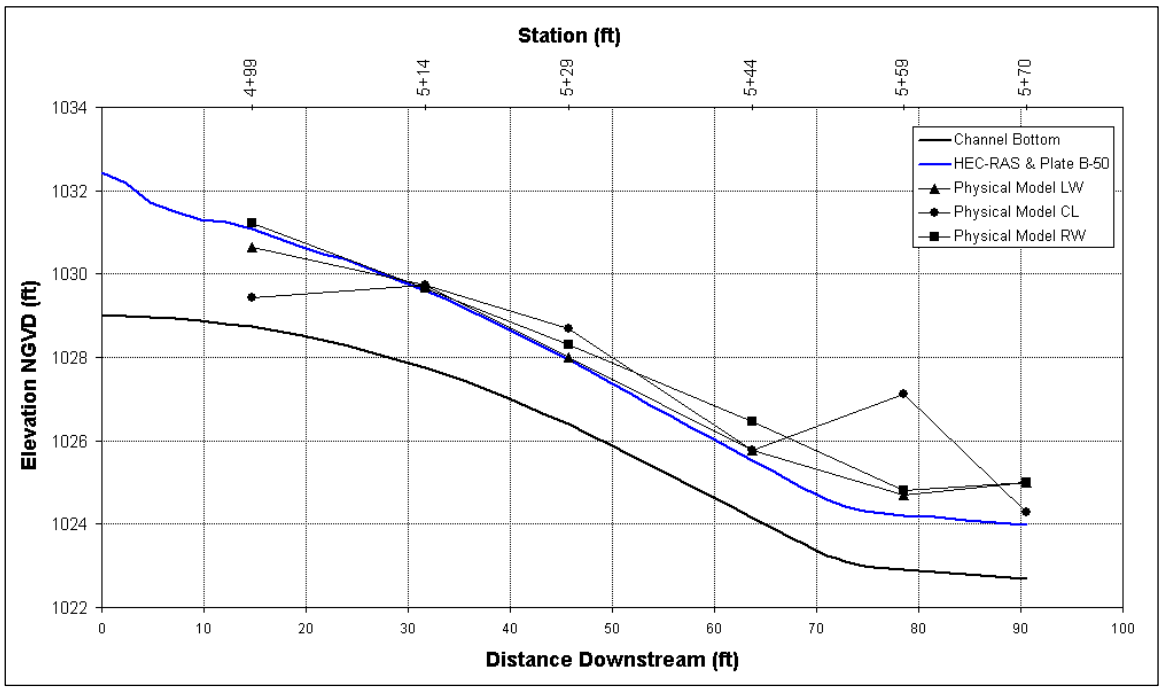

Figure 5-6. Water Surface Profile Predictions Using HEC-RAS and Physical Model Results for Flow Scenario (3)

5.3.8.5 Steel Lining

Invert protection due to sediment is not needed since bed loads are expected to be minimal through the attraction water conduit (AWC). However, velocity heads will be very high and could lead to cavitation. The steel lining existing in the flood control tunnel (FCT) was found to provide protection for a cavitation index less than approximately 0.30. Risk of damage increases as the cavitation index decreases (EM 1110-2-1602). Due to the similar operating heads and the performance of the current FCT lining, a critical cavitation index of 0.30 was used for the AWC.

Cavitation index values were computed along the length of the AWC for the flow conditions described in 5.3.8.4. The two flow scenarios that produced cavitation values below the critical value of 0.30 are shown in Figure 5-7. According to the figure, the channel should be lined from the emergency gate to 20 feet downstream of the radial gate to a height of 4 feet. The tunnel will be lined from the emergency gate to the radial gate for the rare circumstance that the emergency gate will be needed for regulation.

The critical cavitation index value and values along the AWC were determined using HEC-RAS Version 3.1. Figure 5-7 and the critical value of 0.30 were obtained using a Manning's n value of 0.013 in both the FCT and the AWC. Sensitivity of the Manning's n value was investigated and shown not to be significant. Using a Manning's n value of 0.011 in the FCT resulted in a critical cavitation value of 0.23. However, the cavitation coefficients in the AWC were also decreased, and 20 feet of steel lining downstream of the radial gate was still necessary.

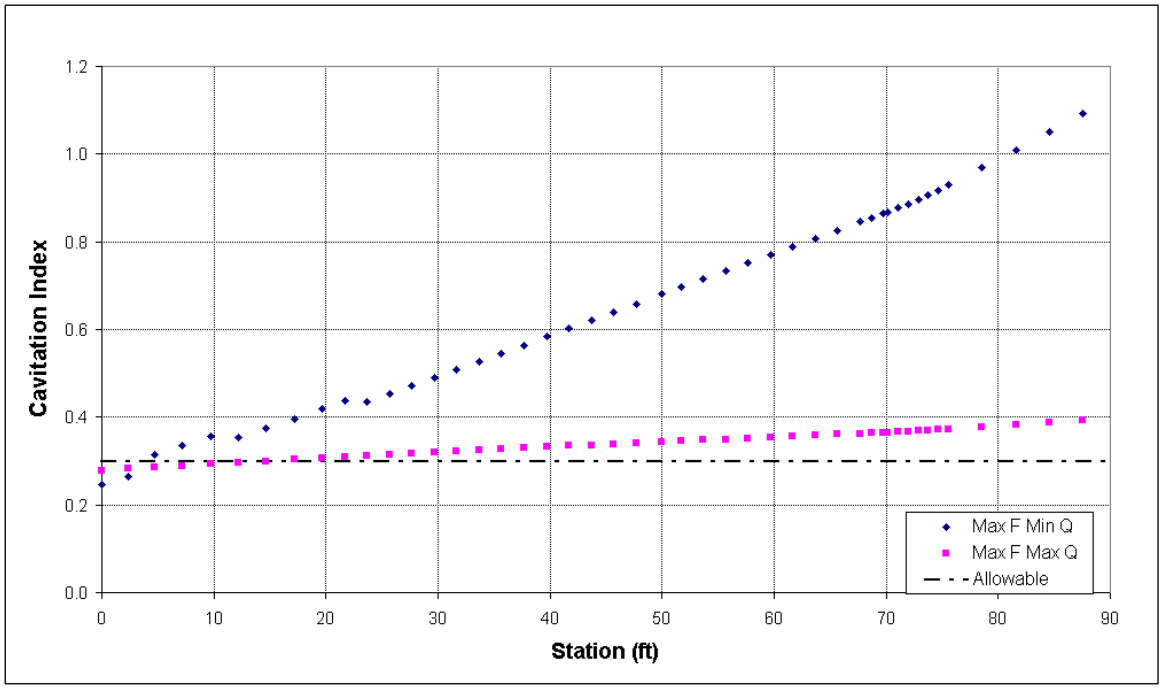

Figure 5-7. AWC Computed Cavitation Index Values d/s of the Radial Gate

5.3.8.6 Air Vent

An air supply is required downstream from the radial gate to provide for two types of demand: air entrainment within the jet issuing beneath the radial gate, and air dragged through the conduit above the water surface due to shear at the air/water interface. Air will also be entrained if a hydraulic jump is manifested (USACE, rev. 1987), although a hydraulic jump is not expected to develop within the range of AWC operating conditions.

Air demand is treated as a function of discharge and Froude number. There are typically two maxima of air demand, a primary maximum occurring at 50 to 90 percent gate openings, and a secondary maximum near the 10 percent gate opening. Froude numbers were computed throughout the range of gate openings and pool elevations commensurate with the predicted radial gate rating curves to a discharge of 1,300 cfs in the primary and secondary maxima gate opening regions. Secondary (spray) air demand was computed according to the equation

$$Qa / Qw = 0.2F \qquad (1)$$

and primary (free-flow) air demand was computed according to the equation

$$Qa / Qw = 0.15F \qquad (2)$$

where *Qa* is the air discharge in cfs, *Qw* is water discharge in cfs, and *F* is the Froude number (assumed to be at the vena contracta near the gate) associated with *Qw*.

These equations were obtained from the Sharma equations as presented against Libby Dam prototype data on Plate 13 of Technical Report HL-84-2 (McGee 1984). This data is presumed to be the best available for the purposes of estimating air demand. Equation 1 above is the Sharma spray equation verbatim; equation two is of the same form as the Sharma free flow equation but with a larger constant and was derived from a graphical fit of the Libby Dam data. The design air demand was found to be associated with the secondary maximum region of air demand and determined to be 2,217 cfs at a computed gate opening of 2 feet. The computed water velocity and Froude number at this gate opening 97 ft/sec and 14.1, respectively. The design air demand is only slightly higher than the computed free-flow air demand.

Design guidance (USACE 1991) requires that the air vent be sized such that the maximum vent intake velocity be no more than 30 fps (20.5 mph), and that the maximum air velocity anywhere be no more than 150 fps (102 mph). Assuming incompressible flow per design guidance, the minimum intake area was computed to be 67 square feet, and the minimum vent area anywhere must be greater than 13.5 square feet. Computed head loss through the vent using Bernoulli's 1-D equation and assuming air temperature of 50 degrees Fahrenheit is on the order of 0.6 feet of water, which meets EM 1110-2-1602 guidelines of 0.5 to 1.0 feet.

The air vent terminates above the routed Probable Maximum Flood elevation of 1223.9 feet. Desirable vent attributes are that it should be as free as possible of sharp expansions, contractions, and bends, that it serve a single outlet, and that it extend entirely across the conduit it serves. The intake has a grill covering to prevent induction of birds and passersby. These attributes are included to the extent possible in the present vent design.

5.3.8.7 Emergency Gate

The emergency gate is located just upstream of the radial gate. The emergency gate is to be deployed in the event of loss of control of facility discharge, amelioration of adverse screen or bulkhead loading conditions, or for dewatering of the AWC. The gate is a conventional slide gate with a hydraulic actuator. The gate will be prefabricated and designed by the manufacturer to handle the flows and heads specified by the design team. Structural design particulars are provided in Chapter 7 and mechanical gate design details are provided in Chapter 10.

While the emergency gate is not intended to be used to regulate discharge through the fish passage facility, preliminary gate rating curves were estimated according to Hydraulic Design Criteria (HDC) 320-1 (USACE, rev. 1987). Hydrodynamic loads were then estimated according to HDC 320-2 and 320-3. The greatest uncertainty in the estimation of net hydrodynamic loads lies in of the computation of the unit downthrust. Consequently, a range of downthrust coefficients from HDC chart 320-2/2 were tested in order to establish a first order estimate of the range of net forces which might be expected. Neglecting the weight of the gate and seal friction forces, the maximum net force range is between –15 to 40 kips, taken positive in the direction of gravity. The gate rating and loading was completed prior to the decision to use a prefabricated gate, but can still be used for the facility operation and gate design respectively.

5.3.9 Wet Well Plumbing

Refill of the wet well following de-watering will be accomplished through a 10-inch diameter re-fill pipe and valve. The center line of the screened entrance to the pipe is located inside the trashrack at elevation 1072.5. The wet well re-fill pipe and valve will serve as a low-level intake and will be used to fill the wet well to the level of the reservoir pool, at which time the dewatering stoplogs may be removed. The refill process at the beginning of the season with a pool elevation of 1080 feet will take approximately 12 hours.

5.3.10 Operational Bulkheads

Bulkheads were originally designed to be placed immediately upstream of the horn array. The bulkheads will now be located on the downstream end of the IFS and will be operated by individual hydraulic actuators. Bulkhead placement immediately downstream of the screens allows for a smaller bulkhead and individual horn control. The bulkheads will be designed to withstand ten feet of static head. Hydrodynamic uplift on the gate was found to be minimal.

When changing the configuration from one collector to two collectors to account for more flow, the radial gate opening must not be increased until after the two-collector configuration has been achieved. Increasing the radial gate for a two-collector configuration while only one collector was operating could cause excessive flows through the collector. However, the radial gate opening must be reduced prior to changing a two-collector configuration to a single collector. This will minimize velocities during the bulkhead movements and ensure that excessive loads will not be imposed on the collector screens.

5.3.11 Hydraulic Design Summary

TABLE 5-4. SUMMARY OF FISH PASSAGE FACILITY HYDRAULIC DESIGN RECOMMENDATIONS

Component	Parameter	Value	Unit	Notes
5.3.1 Trash Rack	Max Design Head	5	ft	65% Design
	Max Impact Velocity	2.5	fps	65% Design
	Top Elevation	1181	ft	65% Design
5.3.2 Entrance Well	Invert	1060	ft	65% Design
5.3.3 Stoplogs	Number	10		9 @ 10', 1 @ 9'
	Elevation	1169	ft	Invert of 1060'
5.3.4 Wet Well	Min Plan Area	446	sq ft	65% Design
	Max Discharge	1200	cfs	Operation of two screens
	Max Downward Velocity	2.7	fps	Based on Area and Max Q
5.3.5 Refill Pipe	Diameter	10	in	65% Design
	Elevation	1072.5	ft	65% Design
5.3.6 Collector Array	Number of Horns	5	-	65% Design
Horn	Design Min Area	100	sq ft	11.0' x 9.1', W x D
	Max Flow	600	cfs	65% Design
	Max Velocity	6	fps	65% Design
	Min Flow	200	cfs	65% Design
	Min Velocity	2	fps	65% Design
IFS	Max Design Head	10	ft	65% Design
	Screen Length	27	ft	(@ 17 degrees) 65% Design
	Screen Type	B69	-	Recommended by TFC
	Porosity	50	%	65% Design
	Max Bar Spacing	1.75	mm	NMFS, 1995
	Orientation	Perpendicular	-	65% Design
Fish Bypass	Number	6	-	One for each horn
	Flow range	25 to 35	cfs	200 and 600 cfs attraction
5.3.7 Fish Well	Min Plan Area	320	sq ft	65% Design (17'x19')
	Max Downward Velocity	0.6	fps	TFC recommendation
	Max Discharge	190	cfs	Based on Max V, suggest 70 cfs
5.3.8 AWC	Invert	1029	ft	65% Design
Conduit	Max Design Discharge	1200	cfs	Operation of two screens
	Max Velocity	107	fps	Q = 200 cfs, Pool = 1177
Radial Gate	Max Design Head	195	ft	PMF forebay elevation, 1224'
	Max Opening	8	ft	AWC height 65% design
	Max Velocity	107	fps	Max operating head = 1177'
Steel Lining	Distance d/s Radial Gate	20	ft	Based on index of 0.30
	Height of Lining	8	ft	Max gate opening
Air Supply	Max Air Demand	2117	cfs	Air Demand, 11-20-01, DEM
	Max Intake Velocity	30	fps	EM 1110-2-1602 Para 3.17.d
	Min Intake Area	74	sq ft	Based on Max Va and Qa
	Max Vent Velocity	150	fps	EM 1110-2-1602, suggest lower
	Min Vent Area	14.8	sq ft	Based on Max Va and Qa
Emergency Gate	Max Design Head	195	ft	PMF forebay elevation, 1224'
	Max Opening	8	ft	AWC height 65% design
5.3.10 Bulkheads	Max Design Head	10	ft	65% Design
	Max uplift	200	lb	Bulkhead u/s of IFS

5.4 REFERENCES

AECOM, 2009. "Howard Hanson Dam Fish Passage Facility Physical Hydraulic Model Study Final Documentation." Document No. 09000-332-410. September 2009.

Albertson, M.L., Dai, Y.B., Jensen, R.A., and Rouse, H., 1950. Diffusion of Submerged Jets, Transactions of the American Society of Civil Engineers, Vol. 115.

Amaral, S.V., *et al.*, 1999. Fish Diversion Effectiveness of a Modular Inclined Screen System. In Innovations in fish passage technology. Pages 61-78 in M. Odeh, editor. American Fisheries Society, Bethesda, Maryland.

Blevins, R.D., 1984. Applied Fluid Dynamics Handbook. Von Nostrand Rheinhold Company, New York, N.Y.

ENSR, 2005. "Memorandum, Re: Howard Hanson 1:8 Scale Physical Model – Enclosure Modification Test 5 Results." 17 June 2005

ENSR, 2005. "Memorandum, Re: Howard Hanson 1:8 Scale Physical Model – Enclosure Modification Test 3 Results." 17 May 2005

ENSR, 2005. "Memorandum, Re: Howard Hanson 1:8 Scale Physical Model – Enclosure Modification Test Results." 2 May 2005

ENSR, 2001. "Howard Hanson Dam Downstream Fish Passage Facility: Assessment of Profile Wire Bar Characteristics." Letter Report for USACE, Seattle District, Contract No. DACW57-97-D-0003. ENSR Project Number 03697-012-100. ENSR, Redmond, WA. 16 July 2001.

ENSR, 2003. "Howard Hanson Dam Fish Passage, 1:15 Scale Physical Hydraulic Model Final Report. Contract No. DACW57-97-D-0003, D.O. No. EC02. ENSR Intl., Redmond, WA. March 2003.

ENSR, 2003a. "Howard Hanson Dam Fish Passage, 1:8 Scale Physical Hydraulic Model Final Report. Contract No. DACW57-97-D-0003, D.O. No. EC03. ENSR Intl., Redmond, WA. March 2003.

ENSR, 2004. "Scope of Work, Downstream FPF Physical Hydraulic Model Studies, Howard Hanson Dam, WA ENSR, DACA-00-D-2009, T.O.15."

ENSR, 2005. "Memorandum, Re: Howard Hanson 1:8 Scale Physical Model – Enclosure Modification Test 4 Results." 25 May 2005

ENSR, 2006. "Memorandum, Re: Howard Hanson 1:8 Scale Physical Model – Enclosure Modification Tests 8 through 10 Results." 27 January 2006

ENSR, 2005. Data submission: Howard Hanson 1:8 Scale Physical Model – Enclosure Modifications 6 and 7 Test Results. 28 July 2005

EPRI, 1987. Hydraulic Model Evaluation of the Eicher Passive Pressure Screen Bypass System. Electric Power Research Institute Report AP-5492, Final Report. Prepared by Eicher Assoc., Portland, OR.

FHWA, 1995. Evaluating Scour at Bridges. Hydraulic Engineering Circular No. 18, Publication No. FHWA-IP-90-017. US Department of Transportation, Federal Highway Administration. Office of Technology Applications, Washington, D.C.

Hecker, G.E., 1984. "Scale Effects in Modeling Vortices." In Symposium on Scale Effects in Modeling Hydraulic Structures. IAHR, DVWK. Edited by H. Kobus. Esslingen am Neckar, Germany. September 3-6, 1984.

Ippen, A.T., 1951. Mechanics of Supercritical Flow. Transactions of the American Society of Civil Engineers, Volume 116.

McGee, R. G., 1984. Prototype Evaluation of Sluiceway Aeration System, Libby Dam, Kootenai River, Montana. Technical Report HL-84-2. Hydraulics Laboratory, US Army Engineer Waterways Experiment Station, Vicksburg, Mississippi, USA.

Miller, D.S., 1978. Internal Flow Systems. British Hydromechanics Research Association.

NHC, 2000. Howard A. Hanson Dam, Washington Spillway Model, Hydraulic Model Study. Final Report. Prepared for Seattle District, Corps of Engineers. Northwest Hydraulic Consultants, Tukwila, WA. June 2000.

NMFS, 1995. Experimental Fish Guidance Devices: Position Statement of National Marine Fisheries Service Northwest Region. January 1995.

NMFS, 1995. Juvenile Fish Screen Criteria. National Marine Fisheries Service, Environmental and Technical Services Division. Portland, Oregon. Revised 16 February 1995.

Ramey, M.P., Hilgert, P.J., Kvam, E.B., Huang, C.M., 2001. "Observations of Fish Behavior in Model Fish Lock, Howard Hanson Dam Additional Water Storage Project." Prepared for US Army Corps of Engineers, Seattle District. R2 Resource Consultants, Redmond, WA. 27 August 2001.

Ranga Raju, K.G., Garde, R.J., 1987. "Modeling of vortices and swirling flows." In "Swirling Flow Problems at Intakes", Chapter 5, by J. Knauss (Ed.). International Association for Hydraulic Research. A. A. Balkema, Netherlands, 1987.

Roberson, J.A., Cassidy, J.J., Chaudry, M.H., 1988. Hydraulic Engineering, Houghton Mifflin Company. Boston, MA.

Stockstill, R.L., Berger, R.C., 1994. HIVEL2D: A Two-Dimensional Flow Model for High-Velocity Channels. Technical Report REMR-HY-12, Repair, Evaluation, Maintenance, and Rehabilitation Program. US Army Waterways Experiment Station, Vicksburg, Mississippi, USA.

USACE, 2001. Water Control Manual, Howard A. Hanson Dam, Green River, WA. Seattle District, US Army Corps of Engineers. April 2001.

USACE, 1980. EM 1110-2-1602, Hydraulic Design of Reservoir Outlet Works. Department of the Army. 15 October 1980.

USACE, 1991. EM 1110-2-1601, Hydraulic Design of Flood Control Channels. Department of the Army. 1 July 1991.

USACE, 2000. EM 1110-2-2702, Design of Spillway Tainter Gates.: Department of the Army. 1 January 2000.

USACE, revised 1987. Hydraulic Design Criteria. Corps of Engineers Civil Works Investigations – Hydraulics, Item CW 804. US Army Engineer Waterways Experiment Station, Vicksburg, Mississippi, USA.

Yeh, H.H., Shrestha, M. (1989). "Free Surface Flow Through Screen." In Journal of Hydraulic Engineering, V. 115 (10), pp. 1371-1385. American Society of Civil Engineers, October 1989.

CHAPTER 6 GEOTECHNICAL DESIGN

6.1 GENERAL

Geotechnical design analyses involve the existing dam and both the right and left project abutments. This chapter summarizes the geotechnical design analyses conducted for the construction of the proposed juvenile fish passage facility (FPF) along the left abutment.

6.2 GEOTECHNICAL DESIGN CRITERIA

The following U.S. Army Corps of Engineers publications were used in the design of the Howard Hanson Dam Additional Water Storage Project:

EM 385-1-1, "Safety and Health Requirements Manual"

EM 1110-1-1802, "Geophysical Exploration for Engineering Investigations"

EM 1110-1-1804, "Geotechnical Investigations"

EM 1110-1-2907, "Rock Reinforcement"

EM 1110-1-2908, "Rock Foundations"

EM 1110-1-3500, "Chemical Grouting"

EM 1110-2-1914, "Design, Construction, and Maintenance of Relief Wells"

EM 1110-2-2000, "Standard Practice for Concrete for Civil Works Structures, Change 2"

EM 1110-2-2005, "Standard Practice for Shotcrete"

EM 1110-2-2502, "Engineering and Design - Retaining and Flood Walls"

EM 1110-2-2901, "Tunnels and Shafts in Rock"

EM 1110-2-2902, "Conduits, Culverts, and Pipes"

EM 1110-2-3506, "Grouting Technology"

EM 1110-2-3800, "Systematic Drilling and Blasting for Surface Excavations"

EM 1110-2-4300, "Instrumentation for Concrete Structures"

ER 1110-1-8100, "Laboratory Investigations and Testing"

ER 1110-2-1150, "Engineering and Design for Civil Works Projects"

ER 1110-2-1200, "Plans and Specifications for Civil Works Projects"

ER 1110-2-1806, "Earthquake Design and Evaluation of Civil Works Projects"

ETL 1110-8-11 (FR), "Underwater Blast Monitoring"

6.3 GEOTECHNICAL DESIGN FOR THE NEW FISH PASSAGE FACILITY

Construction of the FPF requires extensive excavation in overburden and rock adjacent to the existing project outlet works tower and outlet tunnel. The proposed excavation for the FPF and its relationship to existing critical structures are shown in the Design Plans. Rock will be removed adjacent to the south side of the existing outlet tower and a column of rock (rock pillar) will be left in place between the FPF excavation and the existing outlet tunnel during a portion of the period of construction. A tunnel for routing attraction water will be constructed between the FPF and the existing outlet tunnel, and a personnel access tunnel will be constructed to connect the FPF and existing outlet tower.

Numerous design changes to reduce costs were made following feasibility approval of the FPF. The primary design change that affected the geotechnical design was the location of the FPF. Design work related to previous FPF footprint locations is not included in this DDR, as that work is not relevant to the current FPF location.

The major components of the geotechnical design for the fish passage facility include:

- Geotechnical exploration.
- Installation of instrumentation on or near existing critical structures, within the rock pillar and near and within the FPF excavation.
- Pre-blast inspection, documentation, and photographs for critical structures.
- Existing outlet tunnel reinforcement and drain hole cleaning/maintenance.
- Excavation of rock and overburden and slope stabilization for the relocated access road.
- FPF footprint and approach channel excavation, slope treatment, and foundation treatment.
- Tunnel mining and rock strengthening methods for the attraction water conduit and personnel access tunnel.
- Water control measures within and adjacent to the excavation.
- Estimation of horizontal soil pressures from backfill between the FPF and the excavation walls.

Other significant design considerations, which are included in the key elements, include construction safety and prevention of concrete-grout contamination in the reservoir.

A list of all the design elements developed thus far for the proposed excavation and cofferdam construction are given in Table 6.1. Details of the design elements related to construction of the cofferdam and the FPF excavation can be found in the Design Drawings and will be summarized in this section.

TABLE 6-1. TABLE OF FPF GEOTECHNICAL DESIGN ELEMENTS

INSTRUMENTATION - EXISTING STRUCTURES AND EXCAVATION
USACE installed instrumentation
• Existing Outlet Tunnel: 14 Crack Meters, 2 Strain Gages, 4 Geophones *(installed 09/2002) and 19 Crack Meters, and 2 Geophones (installed 10/2006)*
• Intake Entrance Structure: 4 Surface Strain Gages *(installed 03/2003)*, 8 Sister Bar Strain Gages (Installed 10/2004), 2 Geophones (Installed 10/2004)
• Gate Tower: 1 Liquid Level System *(installed 05/2003),* 3 Geophones, and 2 tiltmeters
• Gate Tower Bridge: 1 Liquid Level System *(installed 06/2003)*, 1 Geophone, 5 Crack Meters
• Spillway: 1 Geophone
• Rock Pillar: 3 In-Place Inclinometers, 3 Multi-Point Borehole Extensometers (MPBXs), 2 Piezometers (Installed 04/2004)
Contractor installed instrumentation
• Remaining Perimeter of the Excavation: 3 In-Place Inclinometers, 19 MPBXs, 6 Piezometer Clusters
• Cofferdam: 1 Piezometer, 2 Geophones, 5 Sister Bars
• Blasting Contractor Monitoring for Air Blast Overpressure and Peak Particle Velocity
EXISTING OUTLET TUNNEL REINFORCEMENT AND DRAIN HOLE CLEANING/MAINTENANCE
• Tunnel Crown from tunnel station 15+35 to 16+37: Rock dowels: #9, Grade 75, 25-ft long, on 4-ft centers
• Attraction Water Conduit portal with existing outlet tunnel: Rock dowels, #9, Grade 75, 8 – 15 ft. long on 5 foot centers
• Floor, Wall and Ceiling Drain Holes inspected, 51 cleaned
RELOCATED ACCESS ROAD
• Overburden Excavation of between 20-50 feet
• Permanent Retaining Wall along access road consisting of a soldier pile wall keyed into bedrock with soil nail tiebacks.
• 2V:1H Rock cut side slope across road from west end of retaining wall .
• 3V:1H Overburden slope across road from center of access road to the east end of the access road
EXCAVATION STABILIZATION REQUIREMENTS
• Controlled Blasting and Mechanical Excavation Restrictions/Requirements
• Cut slopes vary between 20V:1H and 3V:1H, with 24 inch wide benches every 40-ft excavation lift
• Ground support measures will be installed immediately after each lift is excavated and before excavation of the next lift. Ground support measures are listed in section 6.3.5.
• Rock mass reinforcement of the rock pillar between excavation and outlet tunnel.
ATTRACTION WATER CONDUIT AND PERSONNEL ACCESS TUNNEL MINING AND ROCK REINFORCEMENT
• Controlled Blasting or Mechanical Excavation Restrictions/Requirements
• Rock dowels, shotcrete, and weep holes
WATER CONTROL MEASURES
• Foundation grouting of left abutment of FPF entrance, beneath FPF entrance, beneath the intake structure, and within intake structure west-side seismic retrofit gravel backfill
• Dewatering design (8 Dewatering Wells [2,400 gpm total] and 10 Passive Relief Wells [400 gpm total])

6.3.1 Geotechnical Investigations

From 1994 to 2003 the Corps and its AE contractor, Shanno & Wilson, Inc., conducted an exploration program to support the geotechnical design for construction of the FPF. This program included drilling and logging 41 core borings, performing hydraulic packer tests,

borehole geophysical surveys, laboratory tests on retrieved rock core samples, and excavating 4 shallow test pits. Two pumping tests, a 48- and a 72-hour test, were conducted at two locations to help characterize the groundwater regime in the project area. Additional field exploration included the geologic mapping of bedrock exposures in the project vicinity. The exploration program aided in determining engineering properties of bedrock, identifying and characterizing lithologic units, lithologic boundaries, and lithologic structures including discontinuity sets, fillings and coatings.

Field and laboratory data from the exploration programs were used in classifying the rock mass quality (RMR and Q* systems) and conducting kinematic and limiting equilibrium analyses for rock slope stability. These analyses were used to develop plans for rock mass reinforcement, foundation grouting, and an instrumentation/monitoring program for the proposed excavation. Results from the individual hydraulic packer tests and the pumping tests were used to characterize groundwater in the rock mass and the influence of the reservoir on the groundwater regime and to develop a dewatering/grouting scheme for excavation dewatering.

After the commencement of construction activities, additional borings through the overburden and rock core from the underlying 15 feet of bedrock were collected along the alignment for the proposed FPF guide wall in early 2004. Soils were visually classified and standard penetration tests were performed within the overburden. Rock core was described and maintained in accordance with previous investigation methods.

To support the attraction water conduit (AWC) design work, three nearly horizontal core holes were drilled within the wedge of rock between the proposed AWC and the existing outlet tunnel and along the AWC alignment during the summer of 2004. Information from these core holes was used to refine the AWC design and construction methods of AWC excavation.

A geophysical survey of the outlet tunnel in the vicinity of the proposed AWC portal was conducted in July 2004 to determine the station locations and depths of steel sets used to support the tunnel excavation during construction. The steel sets were located using ground penetrating radar so that rock dowels could be placed without accidentally drilling into the steel sets. Steel sets were located from tunnel station 16+40 to 17+40.

Details of the various site investigations are in the reference documents at the end of this chapter. A summary of the results of the geotechnical investigations is contained in the Geotechnical Baseline Report (GBR) in Appendix B.

6.3.2 Instrumentation – Existing Structures, Rock Pillar and Excavation

The excavation for the FPF is located adjacent to the existing outlet works tower, outlet tunnel, and the bridge pier footings that support the outlet tower bridge. Rock will be removed immediately adjacent to the existing outlet tower, and a relatively thin (18 plus feet) pillar of bedrock will be left between the final excavation and the existing outlet tunnel. A portal will be excavated and constructed where the AWC joins the existing outlet tunnel. A personnel access tunnel will be constructed along the west side of existing intake tower to connect with the FPF. Both the tunnel and the intake tower structures will be subject to blast energy and/or stress

redistribution during rock excavation. The following existing structural elements were identified during the design as having the potential to be impacted by the FPF excavation work:

- existing outlet tower;
- existing outlet tunnel liner;
- the narrow rock pillar that supports the south side of the existing outlet tunnel;
- the easternmost bridge pier; and
- spillway.

To eliminate the possibility that existing structures could be damaged and/or rendered inoperable during excavation and construction of the FPF, a comprehensive instrumentation program was developed specifically to monitor the effects of excavation and construction on these critical structures.

As outlined in Table 6-1, the instrumentation program can be divided into two categories: instrumentation to monitor existing structures and instrumentation for excavation stability. All instrumentation installed and monitored to protect the critical existing structures will be installed, maintained and monitored by Corps in-house personnel (with the exception of extensometers installed within the north wall of the excavation during construction) with assistance from Shannon & Wilson, Inc., and INCA Engineers, Inc. The various construction contractors will be responsible for installing and/or maintaining and monitoring instruments related to overall excavation stability and construction personnel life safety during their construction contract periods. USACE will maintain and repair contractor installed instruments during any interim periods where no construction contract is active.

Data from both instrumentation systems are shared between the construction contractor and the Corps and its consulting contractors. An Automated Data Acquisition System (ADAS) is utilized to monitor all instrumentation near real time and to monitor some critical structures instruments dynamically. The ADAS was installed, programmed, maintained, and monitored by the Corps, INCA, and Shannon & Wilson, Inc. personnel. Contractor supplied instrumentation data are available near real time on a site computer that is accessible by District via remote management software. Existing structures protection instrumentation data are available near real time via a web page maintained by Shannon & Wilson. Data are collected in both quasi-static and dynamic modes. All instruments are read quasi-statically (typically once every hour) throughout all excavation/construction activities. Dynamic readings are initiated for selected types of instruments (i.e., piezometers, crack meters, strain gages, sister bars, and geophones) immediately prior to a blast. Dynamic data consist of hundreds of readings each second during the period of the blast providing complete wave form of structural response to each blast. Quasi-static data are typically available within 15 minutes of the reading by the instrument, and dynamic data are typically available on the web site within 45 minutes of a blast.

The Corps' geotechnical contractor, Shannon & Wilson (S&W), assisted with the design and installation of instrumentation for the existing structures and design for the proposed excavation instrumentation. Instrumentation response values (threshold and limiting) were

developed to provide quantitative criteria to evaluate FPF construction activities protectiveness of existing structures. These values are outlined in Table 6-2. When threshold values are reached, the construction contractor's methods will be evaluated and altered to prevent limiting values from being exceeded. An Existing Structures Protection Plan supplement to the existing project dam safety plan has been developed to describe how instrumentation will be used to prevent damage to existing critical structures. This supplement describes how data are collected, how the impacts to the structures will be evaluated, and how the Corps will respond to the evaluated impacts.

TABLE 6-2. INSTRUMENTATION THRESHOLD VALUES AND LIMITING VALUES

INSTRUMENT	THRESHOLD VALUE	LIMITING VALUE
Vibrating Wire Piezometer	Groundwater <5 ft below adjacent excavation sub-grade elevation	Groundwater equal to adjacent excavation sub-grade elevation
Inclinometer – In-Place	Change in Slope = 200 Arc Seconds	Change in Slope = 300 Arc Seconds
Inclinometer – Survey	0.002H	0.0025H
Multi-Point Borehole Extensometers Above Outlet Tunnel	0.01 ft	0.04 ft
Multi-Point Borehole Extensometers in Excavation Sidewalls	0.002H	0.0025H
Liquid Level Gages (relative to reference gage)	0.01/0.1 inch[1]*	0.02/0.2 inch[1]*
Liquid Level Gages (gage to gage)	0.02/0.2 inch[1]	0.04/0.4 inch[1]
Crack Meters	0.05/0.25 inch[2]	0.1/0.5 inch[2]
Strain Gages	100/500 microstrain[1]	250/1000 microstrain[1]
Load Cells	5 kip increase in load	10 kip increase in load
Geophones – Reinforced Concrete	16 in/s	20 in/s
Geophones – Other Structures	6 in/s	8 in/s

1. Low values are for delta immediately pre- and post-blast. Higher values are for long-term.
2. Higher threshold and limit values are for bridge deck joint meters CM_0017 and CM_0018.

6.3.2.1 Outlet Tunnel

A thorough inspection of the outlet tunnel (in the area adjacent to the proposed FPF excavation) was completed on August 9, 2002 (Shannon and Wilson final report, November 2002). During this site visit, existing cracks, construction joints, weep holes, areas of seepage, and concrete surface conditions were mapped and photographed, from the gate tower to the end of the splitter wall in both tunnels. Based on the results of this inspection, the quantity, type and location of instruments were determined. Most of the instrumentation includes vibrating wire (VW) crack meters across cracks and joints to provide advance warning of possible expansion and contraction that might be experienced during adjacent blasting or movement of rock blocks due to in-situ rock mass stress changes. With the exception of two crack meters located on the ceiling in the north tunnel, the majority of the crack meters are located on the south tunnel wall, closest to the proposed excavation. Additional instrumentation includes two vibrating wire strain

gages, four thermistors and four seismic geophones. The reader is referred to the Instrumentation Installation Report for the outlet tunnel (Shannon & Wilson 2002) for location of instruments in the outlet tunnel.

A second outlet tunnel inspection of the portion of the existing tunnel surrounding the proposed AWC portal was conducted in August 2005. During this site visit, existing cracks, construction joints, weep holes, areas of seepage, and concrete surface conditions were mapped and photographed, from station 16+36 to 17+40. An instrumentation program to monitor AWC construction effects on the existing structure was developed and was composed of 19 crack meters and 3 geophones. This instrumentation was installed in October of 2006. For instrumentation locations in the vicinity of the proposed AWC portal, the reader is referred to Shannon & Wilson's 2007 Instrumentation Installation Summary report.

6.3.2.2 Gate Tower, Tower Bridge, and Spillway

Instruments were also installed on the remaining critical structures at HHD. Table 6-1 summarizes the type and general location of instruments. As-built drawings included in the Design Drawings illustrate the current instrumentation plan for the remaining structures. The intake entrance structure of the existing outlet tower has strain gages, sister bars, and geophones. The sister bars were abandoned shortly after installation due to unreliability concerns. The gate tower has crack meters, geophones to measure seismic energy released during blasting activities and a liquid level system to measure horizontal and vertical movement of the structure. The bridge has crack meters installed across expansion joints. The bridge pier footing has a liquid level system, a geophone, and crack meters installed. The spillway has a geophone installed.

6.3.2.3 Rock Pillar, Fish Passage Facility Excavation, & Cofferdam Excavation

Design efforts by the Corps and S&W provided an instrumentation plan for the rock pillar between the tunnel and gate tower and the proposed FPF excavation, and around the periphery of the proposed FPF excavation. In-place inclinometers and multi-point borehole extensometers (MPBXs) were installed to monitor rock slope stability, and vibrating wire piezometers were installed to monitor groundwater conditions around the proposed FPF excavation. As-built drawings included in the Design Drawings illustrate existing and proposed instrumentation for the construction of the FPF.

6.3.2.4 Cofferdam Structure

Sister bars and a piezometer were installed within the north wall of the cofferdam structure. The piezometer was installed to monitor groundwater uplift conditions under the cofferdam and the sister bars were designed to measure strain within the cofferdam when the cofferdam is used to hold back the reservoir to a maximum elevation of 1167 during the excavation for the FPF. The sister bars were abandoned shortly after installation due to unreliability concerns.

6.3.3 Existing Outlet Tunnel Liner Strengthening and Drain Hole Cleaning

The stability of the existing outlet tunnel adjacent to the proposed FPF was investigated using a two-dimensional, finite difference numerical model (FLAC) and limiting equilibrium analyses. The results of the FLAC analyses indicated that the redistribution of stress from the FPF excavation could produce cracking of the tunnel lining. The limiting equilibrium analyses indicated that kinematically permissible plane shear failures potentially exist within the rock pillar separating the excavation from the outlet tunnel. To mitigate these potentially adverse conditions, untensioned rock bolts were to be installed within the crown and south wall of the outlet tunnel (see Table 6-1 and the Plans and Specifications for Existing Outlet Tunnel, Untensioned Rock Bolt Installation and Drain Hole Clearing, USACE March 2003, for details) and existing drain holes were cleaned to insure proper drainage.

New information on the geologic materials within the rock pillar and immediately above the outlet tunnel was acquired in the spring of 2003 during the installation of critical structures instrumentation installation. Additional laboratory measurements of rock properties were made on samples of core from these borings and limiting equilibrium analyses and the FLAC model were re-run using updated engineering rock properties from these new borings. The FLAC model was re-run with the following additions to the previous runs: the presence of the tunnel steel sets was simulated; the presence of the rock dowels to be installed in the tunnel were included; and the hydrostatic condition of 1,180 feet was simulated. The results of these additional analyses led to the conclusion that the rock pillar could not be supported during construction by rock bolts alone within the existing proposed FPF excavation footprint. A decision was made in October 2003 to not install the tunnel south wall rock bolts pending further design analyses. The crown bolts were installed as planned. The Cofferdam/Excavation construction contract was advertised with an excavation limit of 1074 feet until final rock support for the rock pillar was developed. The elevation of 1074 feet was determined using the FLAC model to calculate when unfavorable tensile stresses could develop around the tunnel during excavation.

Subsequent changes to the design of the FPF have resulted in a wider rock pillar than originally envisioned and hence more favorable conditions. The rock support for the pillar is currently being redesigned and will likely consist of rock mass grouting, rock bolts/anchors and possibly additional support (e.g., steel and concrete columns). All design work for supporting the rock pillar during construction will be done to insure the integrity of the pillar during construction and specifically to prevent slip along preexisting fractures, loosening of the materials comprising the pillar, and reduction of the development of tensile stresses on the tunnel liner.

6.3.4 Relocated Access Road

The existing access road that connects the right abutment to the left abutment via the dam face in front of the spillway will be demolished during the construction of the FPF. The existing access road will be diverted to an el. 1180 deck that will surround the final FPF and diverted towards the south into the left abutment approach channel hillside. South of the FPF the left bank slope rises to elevations over 1220 feet. Overburden on the south side of the excavation varies in

thickness from several feet to possibly 80 feet. Excavation depth varies between 20 and 50 feet. A 260-foot-long soldier pile style wall with sockets keyed into bedrock and soil nail tie backs will be built to stabilize the existing slope above the road. Across the road from the west end of the retaining wall, a 2V:1H rock cut slope will be created by means of controlled drilling and blasting. A 1V:3H overburden slope across the road from the center to the east end of the access road will also be excavated.

6.3.5 Excavation, Slope Treatment, and Foundation Treatment

The Cofferdam/Excavation contract includes excavation for the cofferdam, the approach channel and the footprint of the FPF to an elevation of 1074 feet. Excavation below an elevation of 1074 feet including the attraction water conduit and the personnel access tunnel will be included in the FPF construction contract. In designing the rock and soil cut slopes, the geotechnical investigations and analyses conducted by the Corps and S&W were utilized.

6.3.5.1 Rock Slope Excavation

Construction of the FPF requires a shaft excavation in rock varying from about 90 to 110 feet wide and 150 feet in length at foundation grade. The excavation will extend to an elevation varying between 1021 feet to 1055 feet (110 to 150-foot depth). Excavation work will be accomplished by mechanical removal and/or by a prescriptive, controlled drill and blast methods designed to be protective of the existing critical structures.

The fresh rock is anticipated to stand on a 20V on 1H slope. For ease of construction the near vertical slopes will have 24-inch setbacks for air track drills.

6.3.5.2 Slope Treatment Design

The rock slope stability analyses conducted by the Corps and S&W for the cofferdam and FPF excavations indicate that rock blocks in either the wedge or plane shear failure modes, with computed factors of safety less than 2.0, would be the most probable types of failure modes encountered and could occur in all excavation slopes under saturated conditions. This holds true even if there were no water pressure in joints that bound the rock blocks. Results of these pre-construction studies indicated the need for rock slope reinforcement and groundwater control. Rock dowels and fiber reinforced shotcrete were found to provide appropriate rock reinforcement while weep holes and the dewatering system (see section 6.3.8.2) provide groundwater control.

The excavation rock face will be mapped by a Corps geologist as excavation progresses. Additional rock dowels will be added or existing rock dowels will be lengthened if discontinuities with less favorable orientations and/or persistence are encountered.

6.3.5.3 Rock Pillar Support

During the 2003 installation of instrumentation in the rock pillar between the existing outlet works tunnel and the proposed FPF excavation, Corps and S&W geologists identified a greater abundance of low strength rock than had been previously encountered within the project area. The greater abundance of low strength rock in the rock pillar, coupled with the narrower

pillar width associated with the addition of galleries on the north side of the structure, led to concerns regarding the stability of the rock pillar due to rock block failure. The galleries were later moved to the south side of the structure but this did not mitigate all of the concerns regarding the stability of the rock pillar.

Shannon and Wilson was tasked with evaluating the stability of the rock pillar and the existing outlet tunnel based on the available data. They performed stability analyses on the rock pillar and estimated stress distributions within the outlet tunnel and the rock mass based on static and seismic conditions. Based on the results of these analyses, S&W developed a rock pillar support scheme that provided an adequate level of protection while accommodating the FPF excavation. The support scheme retained the general slope support features but added steel beams in drilled shafts as well as rock mass grouting. Details of the investigation and support recommendations are available in the S&W report (2008). The report recommendations were adopted by the Corps and work was completed in late 2007.

6.3.5.4 Reaction Plane Design

In 2006, during the review of FPF excavation drawings, it was determined that the as-built cofferdam reaction area had not been excavated per contract and that the bearing surface area had been significantly reduced. In response to this discovery, the Cofferdam Excavation contract was modified to leave a strip of rock on the southeast end of the excavation while the new rock loading and support conditions were evaluated.

INCA Engineers was tasked with providing updated cofferdam loading conditions. Shannon and Wilson was tasked with performing stability analyses on the south slope given the as-excavated conditions supplied by Traylor Brothers, Inc, the Cofferdam Excavation contractor. Shannon and Wilson was also tasked with developing an appropriate support scheme based on the results of the stability analyses. The support scheme proposed by S&W included post-tensioned rock anchors, steel and wire mesh reinforced shotcrete, and weep holes. This support scheme was adopted by the Corps and was incorporated into the Reaction Plane contract that was awarded in the fall of 2008.

In February of 2009 it was determined that the survey used for the evaluation of the reaction plane stability and for support design was inconsistent with a later as-excavated survey submitted by the Cofferdam Excavation contractor. Efforts to determine which survey is accurate have been unsuccessful and the Reaction Plane contract is currently suspended. Efforts are ongoing to develop an alternative reinforcement scheme based on the absence of a reaction bearing surface.

6.3.6 Attraction Water Conduit

The attraction water conduit (AWC) will be constructed during the FPF construction phase after the cofferdam/excavation construction phase is complete. Rock support of the tunnel consists of weep holes, un-tensioned rock dowels, and shotcrete. Un-tensioned rock dowels will be installed in the walls and crown of the existing outlet tunnel in the vicinity of the proposed AWC portal into the existing outlet tunnel. These dowels will be installed prior to the

demolition/construction of the portal to mitigate potential stress changes in the surrounding rock mass due to tunneling and portal demolition/excavation activities.

6.3.7 Personnel Access Tunnel

A personnel access tunnel will connect the FPF to the existing outlet works tower. The tunnel invert will be at approximately elevation 1074 feet where it intersects the FPF and at approximately elevation 1070 feet where it intersects the west side of the existing outlet tower. Rock support during construction will consist of rock dowels, shotcrete, temporary weep holes and possibly grouting.

6.3.8 Water Control Measures

Investigation studies and conditions observed during dam construction indicate that groundwater and reservoir water will likely enter the excavation at rates of 80 to 2,800 gpm along fractures if water control measures are not employed. Additionally, hydrostatic pressures acting on the rock mass toward the open excavation faces will likely promote unstable conditions that favor rock failure. Therefore, grouting, active and passive dewatering using wells, and excavation wall weep holes will be used to control water flow into the excavation and reduce hydrostatic pressures on the rock faces.

6.3.8.1 Foundation Grouting

Structural configuration of the rock in the area of the proposed FPF is such that migration of groundwater is possible along faults, shears, and/or joints. The design includes grouting the left abutment of the cofferdam, the foundation beneath the cofferdam, grouting at the base of the existing intake structure, and grouting the gravel fill beneath the intake structure west wall seismic retrofit. The intent of the grouting is to reduce seepage into the excavation.

6.3.8.2 Dewatering Plan

Data from pumping tests indicate that the fractured bedrock behaves similarly to a granular porous media on a macro scale for wells that penetrate to depths of the proposed excavation and that the primary source of water to the excavation will likely be from groundwater originating from the south of the excavation location. Therefore, a dewatering system using wells to actively pump water from the excavation perimeter has been designed to lower the potentiometric water surface surrounding the excavation. Additionally, temporary passive dewatering wells will be installed at the downstream base of the cofferdam to relieve uplift pressure that could develop beneath the cofferdam during times of high reservoir elevations.

The dewatering system is conservatively designed to stop flows into the excavation assuming a flow rate of 2,800 gpm. Eight dewatering wells, to be screened from the surface to an elevation between 920 and 820 feet depending on piezometer response during drilling, can accommodate up to 300 gpm each (for a total of 2,400 gpm), and the 10 relief wells can

accommodate an additional 400 gpm. The grouting program adjacent to the cofferdam and existing intake tower should further reduce flows into the excavation from the reservoir.

6.3.9 Estimation of Horizontal Soil Pressures from Backfill Between the FPF and the Excavation Walls

The profile of the FPF structure is such that above approximately elevation 1083, there will be a gap between the walls of the structure and the excavated rock face. This gap will vary from 2 to 12 feet in width with increasing widths coincident with increasing elevation. The gap will be backfilled with suitable sand and/or gravel fill and carefully compacted to prevent development of excessive soil pressures and future settling.

Traditional methods as outlined in EM 1110-2-2502 for estimating earth pressures on retaining walls predict pressures that are overly conservative for the proposed geometry. Arching theory (Frydman and Keissar 1987, Take and Valsangkar 2001) predicts that there will be a reduction in lateral earth pressures due to vertical frictional boundary forces acting on the FPF wall and the rock face. Therefore, the equations for determining earth pressure coefficients as presented by Frydman & Keissar and Take & Valsangkar were used to calculate the lateral pressures acting on the wall. Hydrostatic pressures acting across the entire height of the wall were assumed.

6.3.10 Construction Material Sources

Based on the project foundation report, all excavated rock is considered unsuitable for riprap primarily due to the tendency for pyroclastic materials to slake and degrade with prolonged exposure to water and air. However, some excavated rock when crushed may be suitable for back fill use. Rock quality testing has not been performed at this time. The contactor will be allowed to use excavated rock for backfill if the material meets back fill specifications to be determined.

6.3.11 Excavation Material Disposal

Overburden and rock removed during the initial phase of excavation has been disposed of by the construction contractor on an approved, City of Tacoma property approximately 2.2 miles from the FPF site. Excavated material from future work will also be disposed of at the City of Tacoma property.

6.4 REFERENCES

Frydman, S. and Keissar, I, 1987. Earth Pressure on Retaining Walls Near Rock Faces. Journal of Geotechnical Engineering. Vol 113, NO 6, June 1987.

Shannon & Wilson, Inc., 2002, Final Report: Instrumentation Installation Summary, Outlet Tunnel. Howard Hanson Dam, Eagle Gorge, Washington. Contract No. DACA67-02-0201, Task Order No. 1. November 2002.

Shannon & Wilson, Inc., 2004a, 100% (Final) Geotechnical Report Excavation and Tunnel Rock Support Analyses and Recommendations. Howard Hanson Dam Fish Bypass Facility, Eagle Gorge, Washington. Contract No. DACW67-00-D-2002, Task Order Nos. 8, 9, and 11. February 2004.

Shannon & Wilson, Inc., 2004b, Geotechnical Report Excavation and Tunnel Rock Laboratory Testing of Rock and Analysis of Fish Passage Facility Excavation, Rock Pillar, and Outlet Tunnel Stability. Howard Hanson Dam Fish Bypass Facility, Eagle Gorge, Washington. Contract No. DACW67-00-D-2002, Task Order 7. March 2004.

Shannon & Wilson, Inc., 2004c, Additional Geotechnical Borehole Data Collection and Analyses. Howard Hanson Dam Fish Bypass Facility, Eagle Gorge, Washington. Contract No. DACW67-02-D-0201, Task Order 2. April 2004.

Shannon & Wilson, Inc., 2005a, Existing Structures Instrumentations Systems Performance and Data Evaluation Interim Report. Howard Hanson Dam Fish Bypass Facility, Eagle Gorge, Washington. Contract No. DACW67-02-D-0201, Task Order 4. February 2005.

Shannon & Wilson, Inc., 2005b, Results of Geophysical Determination of Steel Set Locations in the Outlet Tunnel Liner. Howard Hanson Dam Fish Bypass Facility, Eagle Gorge, Washington. Contract No. W912DW-05-D-1021, Task Order 3. September 2005.

Shannon & Wilson, Inc., 2007a, Instrumentation Installation Summary, Outlet Tunnel Near AWC, Howard Hanson Dam, Eagle Gorge, Washington. Contract No. W912DW-05-D-1021, Task Order 7. April 2007.

Shannon & Wilson, Inc., 2007b, Geotechnical Report, Howard Hanson Dam Fish Passage Faciliity, Analysis of Fish Passage Facility Excavation, Left Abutment Reaction Stability, Eagle Gorge, Washington. Contract No. W912DW-05-D-1021, Task Order 5. June, 2007.

Shannon & Wilson, Inc., 2008, Geotechnical Report, Howard Hanson Dam Fish Passage Facility, Analysis of Fish Passage Facility Excavation, Rock Pillar and Outlet Tunnel Stability, Eagle Gorge, Washington. Contract No. W912DW-05-D-1021, Task Order 5. May, 2008.

Take, W. A. and Valsangkar, A. J., 2001. Canadian Geotechnical Journal. Vol. 38, 2001.

USACE, 1963 Howard A. Hanson Dam Foundation Report, Rock Fill Dam, Spillway and Outlet Works, Green River, Washington: Seattle District, Seattle, Washington.

USACE, 1983, Earthquake Analysis of Howard Hanson Dam, Design Memorandum No. 26: Seattle District, Seattle, Washington.

USACE, 1994, Position Paper on Seismic Hazard to Corps of Engineers Dams from Cascadia Subduction Zone Earthquakes: Seattle District, Seattle, Washington.

USACE, 1998, Additional Water Supply Project, Final Feasibility Study Report and Final Environmental Impact Statement (EIS), Howard Hanson Dam, Green River, Washington: Seattle District, Seattle, Washington.

USACE, July 2003. Contract DACW67-03-C-0014 Existing Outlet Tunnel, Untensioned Rock Bolt Installation and Drain Hole Cleaning at Howard Hanson Dam, Washington.

USACE, September 2003. Contract W912DW-04-C-0003, Fish Passage Facility Excavation and Cofferdam Howard Hanson Dam, Washington.

CHAPTER 7 STRUCTURAL DESIGN

7.1 STRUCTURAL DESIGN CRITERIA

- ER 1110-2-1806, "Earthquake Design and Evaluation of Civil Works Projects"
- ER 1110-2-1150, "Engineering and Design of Civil Works Projects"
- EM 1110-2-2000, "Standard Practice for Concrete for Civil Works Structures"
- EM 1110-2-2400, "Structural Design of Spillway and Outlet Works"
- EM 1110-2-2104, "Strength Design of Reinforced Concrete Hydraulic Structures"
- EM 1110-2-2502, "Retaining and Flood Walls"
- EM 1110-2-2702, "Design of Spillway Tainter Gates"
- EM 1110-2-2105, "Design of Hydraulic Steel Structures"
- ACE 7-98, "Minimum Design Loads for Buildings and Other Structures"
- AASHTO, "Guide Specifications for Design of Pedestrian Bridges", 1997
- ACI 318-95. "Building Code Requirements for Structural Concrete"
- AISC "Manual of Steel Construction" LRFD, Second Edition.
- AWS D1.1, "Structural Welding Code"
- Hendrick Perforating Handbook, 2002
- SEI/ASCE 37-02, Design Loads on Structures During Construction
- Unified Facilities Criteria (UFC), "Weight Handling Equipment", 2004
- Design Memorandum Supplement No. 26, "Earthquake Analysis of Howard A. Hanson Dam" September 1983.
- Additional Water Storage Project Feasibility Report, Appendix A, Design.

Loads:

- Seismic: The maximum design earthquake (MDE) for all critical structures, those having Dam Safety functions, shall be the Maximum Credible Earthquake (MCE). The seismic load due to the MCE was determined to be a normalized Seed's response spectrum for rock, scaled to a peak ground acceleration of 0.35g at 5 percent damping and duration above 0.05g of ten seconds. The cofferdam is considered critical since it will be a permanent dewatering feature that will be constructed integral with the flood control intake structure. The remainder of the fish passage facility is considered non-critical. Non-critical structures shall have a MDE equal to 0.25g peak ground acceleration. All structures will have an

operational basis earthquake (OBE) of 0.15g which is equal to the event with a 50 percent exceedance in 100 years.

- Maximum design flood pool elevation (PMF) : 1224 feet
- Wind: Basic wind speed of 90 mph.
- Snow/Ice: Ground snow load of 50 psf. No ice loading assumed.
- Miter gates and inclined fish screens (IFS) maximum design static head: 10 feet (water level difference between forebay and wet well)
- Emergency Gate and Radial Gate maximum design static head: 195 feet.
- Inclined Fish Screen: 10 feet of total head differential across screen assembly and 5 feet of head differential for design of porosity plates (backing plates.)
- Maximum velocity through radial gate opening: 107 fps
- Maximum pool elevation during scheduled maintenance: 1169 feet.
- Trashrack design: 1. Static pressure head of 5 feet. 2. Impact force of a 2.0-foot-diameter log, 40 feet long, traveling at 2.5 fps.
- Pedestrian Bridge: Uniform Live Load of 85 psf and H-5 truck loading (acting non-concurrently.) Wind load of 35 psf on full projected area as if enclosed.
- Structural Platform at el 1181 designed to wheel loads from gantry crane including impact

7.2 FEATURE DESCRIPTION

7.2.1 Existing Cofferdam (Phase I)

The cofferdam will become integral with the upstream portion of the fish passage facility. This includes the trashrack grill and a set of (11) existing dewatering stoplogs. The stoplogs are constructed of welded steel plates. The walls are constructed of pre-cast concrete segments anchored together and cast-in-place concrete is used as backfill. The north guide wall will be integral with the existing flood control structure. The south guide wall will be tied-back using rock bolts and will be constructed under the fish passage facility contract. Rock bolt tie-downs will also be used for stability. The existing stoplogs extend to elevation 1169, providing 2 feet of freeboard on the 20-year flood or Phase I pool of 1167 feet. An expansion joint will be provided between the new fish passage facility and the cofferdam to isolate the two structures from thermal movement and to provide structural isolation from the existing tower.

7.2.2 Existing Cofferdam Trashrack (Phase I)

The trashrack consists of a vertical series of horizontal beams at 12-foot spacing, with intersecting columns also at 12-foot spacing. The columns project upstream of the arches to facilitate debris clearing operations. The vertical and horizontal trashrack members were made in

a streamlined shape to minimize turbulence. The vertical and horizontal members are formed by circular steel tube section attached to a smaller circular steel tube at the trailing edge, by steel side plates. The interior of the tubes and the space between the tubes are filled with grout. The use of composite sections also minimized the cross-sectional area of the main members. The flat shape was selected to avoid large axial thrusts at the ends of the beams. The width of 36 feet was selected to provide the desired open area. Within the main trashrack members will be a removable steel grill that will be installed as part of the fish passage facility contract. This consists of 1-inch flat bar spaced about 6 inches vertically and 18 inches horizontally. The opening was sized large enough to not effect fish migration but small enough to intercept woody debris large enough to damage the inclined fish screen.

7.2.3 Wet Well

The wet well houses (5) horizontal bypass pipes; one for each fish collector. Different collectors will be operated at the appropriate elevation as the reservoir rises and falls. The wet well consists of a reinforced concrete structure designed for a dewatered condition with a maximum pool level of el. 1181. Pool levels exceeding el 1181 will overtop the well and tend equalize the net hydrostatic pressure on the walls. The primary horizontal wall reinforcement was designed assuming one-way beam action. Drains were not used to relieve back pressure since this area will be dewatered for periodic inspection and maintenance. The wet well dewatering will be scheduled for that time of year when the pool is relatively low, but actual dewatering capability will exist for pool elevations as high as 1167 feet as a result of required cofferdam capability. For pool elevations below 1080 feet, the fish passage facility will not be in operation. The upstream wet well wall will have a series of openings that will be opened and closed by miter gates. When a fish collector is not in use, the miter gates will be closed to seal the collector opening.

7.2.4 Inclined Fish Screen (IFS) and Inclined Fish Screen Enclosure.

The fish collector consists of three main components. The first is referred to as the horn. Its function is to receive the fish and attraction water, and to accelerate flows from a minimum of 2 fps at the upstream end, to a maximum of 6 fps at the downstream end, based on 600 cfs. The horn has an elliptical taper that results in a uniform increase in velocity per unit length along the flow path. The second component is the inclined screen enclosure. It consists of a rectangular concrete box open at both ends. It is immediately downstream of the horn. The third component is the IFS. The IFS will be a Hendrick profile bar screen type B-69, oriented either perpendicular to the direction of flow or parallel to flow. Because of the inherent uncertainties about the real-world performance of the IFS in the reservoir (i.e., amount of debris accumulated and debris shedding ability) only two of the five IFS screen assemblies will be constructed under the main fish passage facility contract. One will use a perpendicular oriented screen with porosity plates that meets fish passage criteria. The other will use a parallel screen orientation without porosity plates that does not meet current fish criteria but has a significantly lower head loss across the

screen which may require less frequent backfilling cycles. During the first season of operation, a comparison will be made of the two screen assemblies from a biological and operational standpoint. A follow-up contract will include any revisions necessary to optimize the current design. The fish screen will be fabricated from stainless steel with U-clip supports spaced 2 inches apart. The screen will be supported by a modular steel subframe constructed of ¼ inch x 3 inch stainless steel bars and will be welded directly to the IFS support structure. The IFS structure that supports the subframe consists of four parallel structural tubes supported on two-piece self-lubricating bronze bushings that will rotate about a steel pipe mounted to the walls of the enclosure. Each frame will be supported at the downstream side by a steel pipe (link arm) connected to a horizontal hydraulic actuator that will rotate the screen during backflushing operations. Electronic transducers will monitor the increase in hydrostatic head on the screen as debris accumulates to ensure that the screen will be rotated before the maximum design head pressure is reached. To comply with fish passage criteria, porosity plates will be bolted to the downstream side of the IFS to evenly distribute the head pressure across the screen. These plates have been designed using Hendrick's structural design criteria for perforated plates. The holes in the porosity plate will be beveled to reduce flow separation that may cause excessive noise and vibration. Attached to the downstream area above the inclined screen is the fish bypass. It will consist of a stainless steel pipe to direct fish into the fish well.

7.2.5 Fish Well

The fish well consists of a reinforced concrete structure designed for a dewatered condition with a maximum pool level of el. 1181. Pool levels exceeding el 1181 will overtop the well and tend equalize the net hydrostatic pressure on the walls. The primary horizontal wall reinforcement was designed assuming one-way beam action. The height is based on a total pool fluctuation from el. 1177 to el. 1080 feet. The floor elevation is immediately above the attraction water conduit ceiling (el. 1042) and matches the floor elevation in the adjacent valve room.

7.2.6 Valve/Gate Chambers and Tower

The tower serves a number of functions. It permits personnel access to the facility during a PMF event from the existing service bridge (el 1228) onto the new pedestrian bridge that connects to the fish tower. The tower also provides for an air vent above high pool. The electrical and mechanical rooms are also housed in the upper portions of the tower so as to provide relatively dry and easy access. There are also some intermediate access points such as the el. 1181 level that will have a watertight door. There will also be a personnel access tunnel between the new tower and the existing tower at el. 1070.75 via the fifth floor gallery. The existing el. 1140 access into the old tower was sealed during the cofferdam phase of construction to permit backfilling for the new 1181 deck. At the base of the tower will be radial gate chamber, emergency gate room, valve room and mechanical rooms. The valve room at el. 1042 houses much of the mechanical piping used for regulating/draining the fish well. Additional space for mechanical equipment and/or storage is at el. 1029, directly beneath the 1042 elevation valve

room and adjacent to the attraction water conduit (AWC). Additional storage and equipment space is provided beneath the fish well at el. 1029. The gate chamber is a chamber provided above the radial gate that receives the gate in the up position. It is also a space that converges with the air vent. Personnel access is provided via a door into this space for inspection and minor repairs. The air shaft is positioned vertically above the radial gate cylinder. For equipment too large or heavy to place in the tower via the elevator, equipment access hatches exist at every floor elevation. Hoists will be mounted such that large/heavy equipment can be raised or lowered throughout the height or depth of the tower.

7.2.7 Pedestrian Bridge

Personnel access will be provided from the existing bridge to the new tower at el. 1228 (floor 14.) Low steel elevation for the new bridge is 1223.8 and about 1223.0 for the existing service bridge (PMF level is 1224.) The bridge is designed for an 85 PSF pedestrian live load and an H-5 truck (acting non-concurrently.) The bridge will be constructed of two parallel simply supported welded tubular steel trusses supporting a 6-foot wide (nominal) deck constructed of galvanized welded steel grating. Weathering steel will be utilized to eliminate the need for repainting. At pier #3, the new bridge will be supported on a steel bearing beam anchored to the sides of the existing pier. At the new tower, the bridge will be supported on concrete corbels cast integral with the exterior wall. Elastomeric bearing pads will be used to distribute loads to the supports and to allow for thermal and seismic movement at pier #3. An opening will be sawcut in the parapet wall of the existing bridge for access to new bridge.

7.2.8 Stoplogs

7.2.8.1 Dewatering Stoplogs (Phase I)

A set of dewatering stoplogs is provided for purposes of dewatering the wet well and areas downstream. These areas will be dewatered for routine inspection and maintenance. Since this function may be scheduled, it will be scheduled in the times of the year when the pool is the lowest, thereby minimizing bulkhead pressures that the wet well walls and stoplogs must withstand. Top of stoplogs was set at el. 1169 feet. The bottom elevation is 1060 feet. A set of eleven stoplogs, each 10 feet high except for one which is 9 feet, provides 2 feet of freeboard on the el. 1167 pool. To optimize weight on the one hand and provide some standardization on the other, it was decided to group the stoplogs in three section properties. Thus the upper stoplogs group would not be designed for the higher heads. The stoplog skin plate is located on the upstream side to avoid the tendency for silt and other debris to settle out and accumulate on the stoplog stiffeners. Seals transition from the downstream side of the stoplog slots to the upstream skin plate. Thus water does not exert a buoyant force acting to reduce pressure on the seals between stoplogs. These stoplogs will be handled by a new project gantry crane, which will connect to the stoplogs by the use of a lifting beam. The stoplog storage area will be adjacent to the existing retaining wall located south of the fish passage facility. Due to limited space on the 1181 deck for vehicle access, the logs have to be stored so that they are oriented 90 degrees with

respect to the stoplog slot. Therefore, a heavy duty fork lift will have to be used to rotate the logs before being lifted by the gantry crane. The weight of heaviest stoplog is about 26 tons. An underground storage vault was considered initially in lieu of storing the logs on the 1181 deck but was ruled out because of interference caused by the existing counterfort walls of the cofferdam.

7.2.8.2 Miter Gates

Five hydraulically-operated built-up steel miter gates will be used to block flow through individual fish collectors. The miter gates are designed to span vertically across the collector openings at the wet well wall. The skin plate will be located on the upstream face of the gate so fish are not trapped inside the interstitial space of the structure. The gates are designed in accordance with EM 1110-2-2105 for the maximum *differential* hydrostatic head of 10 feet plus the maximum rated capacity of the hydraulic actuator. Seismic loads have not been considered for design since the miter gates are not critical to the operation of the dam during an earthquake. The dewatering stoplogs can be used to block flow at the entrance to the horn and/or the emergency gate can be lowered to prevent release of water through the attraction water conduit. Rubber J-seals mounted to at the edges of the upstream wall openings of the wet well will be used to prevent leakage when the gate is in a closed position. Self-lubricated aluminum bronze bushings will be used to minimizing friction at the hinges and to serve as a wearing surface.

7.2.9 Gantry Crane and Support Platform

The gantry crane will be procured separately from the facility construction contract using a performance based contract. The crane consists of a four leg steel frame with a rotating boom and machinery house and counterweight as required by the manufacturer. A clamshell bucket and four tine grapple attached to hoist line will be used to for debris removal. The maximum estimated weight of debris 15,000 pounds at a 50 feet radius.

Another hoist on the crane will be used to pick up the stoplogs and lifting beam, which together weigh approximately 57,000 pounds. The third hoist will be provided to lift the existing emergency gate that has an estimated weight of 90,000 pounds. The crane will be designed to have enough capacity to lift the bottom stoplog that will have been in place during construction for as long as four years. The hoisting capacity necessary to break the initial seal friction is estimated to be twice the payload weight (including lifting beam) or about 57 tons. Therefore, to eliminate the possibility of overstressing the existing cast-in-place concrete beams supporting the crane rails over the cofferdam, the crane legs have been sloped so that wheel loads will be applied on the abutments instead of the beams.

The gantry crane will have eight wheels to distribute the load. The 18- or 24-inch-diameter wheels will run on rails that are 20 feet apart. The rails are supported on rolled steel beams above the old intake structure and continue on concrete beams over the cofferdam structure and terminate at the 1181 deck. From the 1181 deck, the gantry crane will lower the debris onto trucks for transporting to debris holding areas.

The support platform will consist of steel columns that will be supported on the existing trashrack structure and on the walls of the 1141 deck extension completed under Phase I. Lateral

loads will be resisted by braced steel frames. The 1181 deck will consist of welded steel grating with a removable section provided above the existing bypass intake gate. Non-load bearing precast concrete walls will be provided on two sides of the structure to minimize debris accumulation on the 1141 deck. The northwest side of the structure will be open to provide access the 1141 deck for maintenance. A catwalk will also be provided between the existing tower and the 1141 deck extension.

7.2.10 Attraction Water Conduit

The attraction water conduit passes the major portion of attraction water from the wet well into the flood control tunnel. It consists of a rectangular cross-section. The conduit will be excavated through rock and will have a concrete liner. The amount of rock and debris passing through the conduit is not sufficient to warrant a full length steel liner. The first gate past the conduit entrance will be the emergency gate. Immediately downstream of the emergency gate will be the tainter (radial) regulating gate. This redundancy provides for safety in the event of a problem with one of the gates. It also provides for dewatering of the tainter gate without the time consuming work of placing the dewatering stoplogs.

7.2.11 Emergency Gate

The emergency gate will be a pre-engineered hydraulically actuated slide gate. It is located immediately upstream of the regulating gate (tainter) gate in the attraction water conduit. Its purpose is the shutoff flow through the facility in the event of a regulating gate malfunction. It can also be used as an easy way of dewatering the regulation gate for inspection and maintenance. To allow the gate to close under flowing conditions, a hydraulic cylinder will be used. It will be guided and sealed against slots in the conduit walls. And it will seal against a flush conduit invert. The gate will be designed by the manufacturer for seismic and hydrostatic loads.

7.2.12 Regulating Gate

The regulating gate is a typical pre-engineered tainter gate. It will consist of two radial arms per side, supported laterally by intermediate truss type braces. Trunnion reactions will be taken out through the concrete liner and rock anchors. Access will be provided by a personnel door above the conduit. Crane access is also provided through the vertical air vent shaft directly above the gate and gate operating cylinder. A hatch is provided directly over the shaft, through the upper floors and roof for removing the cylinder, bearings and such. The gate will operate past the full open position to allow access to the upper seal stationary at the conduit soffit. The gate will be designed by the manufacturer for seismic, hydrostatic and trunnion friction loads.

7.2.13 Monitoring Station

Structural features of the monitoring station will include an elevated concrete platform at the 1196 ft elevation and a grating platform at the 1194 ft elevation. The platform at the 1196 ft level will support five holding tanks, fish transfer flumes, a fish grader and a water control structure. The 1194 ft level platform will support two truck transfer tanks, a truck transfer station and an additional water control structure and flumes. An additional concrete platform will be installed over the fish well at the 1228 ft elevation to support hoisting equipment for the lift hopper and a grated platform will be installed around the fish well at the 1207.4 ft elevation to allow operators access to the lift hopper for docking and transfer operations. A metal roof system will be installed over all of these platforms.

All components installed on the platforms (tanks, flumes, water control structures and fish graders) will be constructed of stainless steel. The flumes will be 8 to 12 inches wide and up to 24 inches deep. The holding tanks will each hold 143 cu ft of water and will be approximately 3 ft wide by 19 ft long. The truck transfer tanks will include two upstream segments that can be screened off and used for fish recovery operations or as additional holding areas for fish monitoring operations and a fish holding area for the release operations. The truck transfer tanks will hold a total of 243 cu ft of water and be approximately 3 ft wide by 27 ft long.

The water control structure located on the 1196 ft platform will be approximately 9 ft by 9 ft 6 inches in footprint with a 4 ft depth. The water control structure on the 1194 ft platform will be approximately 5 ft 6 inches in width, 13 ft 6 inches in length and 4 ft tall. These structures will receive drain water from the holding and truck transfer operations and control the operating water depth in these tanks.

The fish grader will be designed with parallel bars that will separate larger fish from the smaller fish. The unit will route the larger fish to Holding Tank 1 while the smaller fish will be routed to either Tank 2, 3, 4, or 5 (as selected by the operator).

7.2.14 Boat Gate

The debris boom with integral boat gate incorporates a hinged center section that opens to allow watercraft passage. An underwater tube frame connects the outer 7 foot sections. The boom diameter is increased to a 24 inch OD for additional buoyancy. Because the center section will be free floating, the outer boom sections must support the additional weight of the underwater tube frame. To provide increased buoyancy, the outer booms will retain the original .250 inch wall thickness. The inner boom wall thickness will be increased to .375 inches. Ballast plates will allow for adjustment of the center section water line, so the boom sections will float at the same level and the gate will latch properly.

This design analysis is based on the information that nearly all of the debris will be floating and stopped by the upper boom. Both the hydrologist and the dam operator confirmed that very little or none of the waterlogged debris (suspended in water) will be trapped on the underwater tube frame. During high flow conditions, the drag forces will rotate the frame toward the surface to an equilibrium position, where the frame weight and drag moments are equal and

opposite. In this rotated position the frame's frontal area is reduced, thus reducing the overall drag.

Boat gates are to be installed at the center of the existing boom lines when the reservoir is at elevation 1070'. The boat gate is designed for loads encountered during an 8000 cfs event at this elevation. During this event surface flow would be around 4.2 fps, with the boat gate rotating a calculated 60 degrees from normal. The calculated tensile force at the boom center is 14 kips. The boom frame is designed for an 18 kip load. An event seeing 2.1 fps surface flow will rotate the boom 27 degrees. Watercraft drawing 6' will be able to pass through in these conditions. Gate opening will be approximately 15 feet 6 inches.

Structural analysis indicates that the hardware connecting the existing log booms is not adequate to carry the additional stresses from the drag on the boat gate. The existing components will be replaced with galvanized grade 43, ¾ inch chain, stainless coupling links, and 1.25 inch galvanized shackles. Calculations show that the existing log boom lugs can be safely enlarged to accommodate the larger shackles.

7.2.15 Fish Passage Debris Boom

The new debris boom will consist of pre-manufactured boom sections provided through a GSA vendor. Each section will consist of a closed cell foam unit covered in a molded polyethylene sheet. Booms will only be submerged about 6 inches below the waterline, having minimal effect on fish passage. They are also available in non-attraction colors such as dark green. Optional plates will fill the gaps between booms. The purpose of this additional boom line is to protect the new fish passage facility from the smaller debris that can infiltrate the outer debris boom.

The boom will have sheave blocks attached to both ends. One end rides up and down a vertical cable attached to the northeast corner of the facility. 550' across the fore bay, the other end rides along a cable that closely follows the contour of the banked shoreline. This cable will be sloped somewhat from horizontal, purpose being to maintain a constant boom chord length (and sag), independent of pool elevation. The cable will attach to the bottom of the bank using rock anchors, and to a 16 foot steel pole near the top of the bank. The poles base will be bolted to a concrete base and supported at the top by three guy wires.

Boom orientation is critical. Location was selected to clear eddy currents as much as possible, minimizing effect on fish passage. Boom is also oriented such that wind will push debris along boom and toward the dam facility, for ease of debris removal. This feature requires that the boom line remain in a relatively taught configuration under normal conditions. A system of sheaves and sprung shock cords allow the boom line to change shape under high load conditions, keeping loads at a desirable level.

Larger buoy type booms are incorporated at the west anchor point, to minimize boom line submergance under high loads and high pool conditions. A secondary (idler) boom will rest on the water when the west anchor point is pulled (approximately 5 feet) underwater, to prevent debris passage. Similarly, a series of floats will close the gap between the vertical cable and facility.

7.3 DESIGN CONSIDERATIONS

7.3.1 Personnel Access

Presently, personnel can access the lower mechanical spaces in the flood control tower by way of a door and a stair starting at the el. 1140 level. With the fish passage facility, the areas adjacent to the flood control tower will be filled to el. 1181 feet. To avoid an additional 40 feet of stairs to descend and climb to and from the lower mechanical spaces, personnel will be able to use the elevator in the new tower, descend to lower gallery of the fish passage facility and walk across to the old tower at el. 1067. An egress at el. 1181 feet is planned for the old tower for emergency purposes to replace the existing egress at 1140 feet, which will be covered.

7.3.1.1 Elevator

Refer to Chapter 10.

7.3.2 Safety

Aside from the standard safety codes and manuals, additional measures will be taken to enhance safety to the extent possible. A semi-automated operation will reduce the exposure of personnel to manual operations. For example, the operating bulkheads at the upstream side of the wet well will be operated by hydraulic actuators that will be remotely controlled, thereby avoiding the need to have personnel working with a crane at the edge of the wet well. Also, the addition of an elevator in the new tower will minimize the need for and use of stairs in a very tall structure.

7.3.3 Concrete

An expansion joint will be provided between the collector and the precast cofferdam structure. The walls of the fish wells, wet well and tower will be staged formed in lifts of 8 to 10 feet in height. PVC waterstops will be provided at all construction joints. The exterior walls have been designed to resist at-rest soil loading, where soil backfill is specified, combined with hydrostatic loading generated by a PMF event. Where the walls are cast directly against rock only hydrostatic loading has been used assuming pressurization of rock joints caused by the PMF. It should be noted that the anchored walls of the excavation are designed to be self-supporting and therefore do not impose any additional loading on the walls of the fish passage facility. For the purpose of analysis, the primary wall reinforcement has been designed assuming one-way beam

action with either fixed or continuous support conditions. Calculations show that MDE seismic loading does not control over PMF loading for walls below grade. A 2-D finite element analysis has been performed on tower floor slabs at elevation 1061.5 and 1074.1 to evaluate the stress concentrations resulting from the numerous openings in the slabs required for machinery and utility access through the tower. Additional reinforcement has been provided at these areas. It should be noted that the guide wall at south east side of the new facility has been designed by A/E under the Phase I portion of the contract, and will be constructed during the main fish passage facility contract..

7.3.4 Tunnel construction

Minimum flows through the project will have to be maintained. Water will be diverted through the existing 48-inch bypass pipe to provide a dry flood control tunnel. Method of rock excavation will be drill and blast. A concrete liner will be cast in place. Contact grouting will be used to fill any void behind the liner.

CHAPTER 8 CIVIL DESIGN

8.1 DESIGN CRITERIA

The civil design portion of the project is shaped and guided primarily by a combination of engineering design documents, user input/requirements, and principles of long-established professional practice. Appropriate design specifications are chosen from Corps of Engineers Guide Specifications for Civil Works Projects (CEGS) and modified to accommodate specific project requirements.

8.2 FEATURE DESCRIPTION

8.2.1 Project Master Plan

8.2.1.1 General Site and Restoration Features

In addition to the fish passage facility and associated appurtenances, the project calls for the construction of a fish monitoring station and approximately 590 lineal feet of gravel access roads connecting the various project features (see general site plan for layout). A new administration building and a maintenance building addition will be completed under Volume 3. Site restoration will consist primarily of rehabilitating areas disturbed by construction activities through re-grading of surface contours and application of seed material. New utilities for this project will include new water supply to the new tower, fire protection aboveground storage tanks and an underground sewage holding tank.

8.2.2 Road Design

8.2.2.1 Design Considerations

Design of the access roads included in this project was guided by an understanding of the need for convenient and safe vehicular access to the various project components (both pre-and post-AWS). Given the relatively high degree of spatial constraint at the project, the chosen design seeks to optimize the interaction between the new and existing roads. In general, access roads are designed with a minimum road width of 14 feet, side slopes of 2H: 1V, gravel wearing course surface, and a maximum slope of 10 percent (attained on access road 2). It is assumed that fill material for the roads will largely be provided from offsite sources. Excavation materials resulting from fish passage facility construction is of poor quality.

Access road 1 connects the existing road on the upstream side of the dam to the fish passage facility deck at el. 1181 feet. The length of access road 1 is approximately 375 lineal feet. The start of this road intersects the existing road at el. 1210 feet and a 15.4% grade transitioning to a 9.3% grade, ending at the fish passage facility deck at el. 1181 feet. A gabion

retaining wall will be constructed along the reservoir side of access road 1 to minimize the amount of fill needed.

Access road 1 must also serve as a dam to prevent water from filling in behind the fish passage facility during Phase II of the AWS Project. A culvert (shown on Figure 8-1) within this road will provide drainage of runoff from the interior, and will allow the interior to be backwatered preventing damage due to a possible overtopping event. It was found that a 24-inch culvert (shown on Figure 8-2) could sufficiently fill the interior with a corresponding 100-year flood event. A flap gate positioned at the reservoir end of the culvert and operated correctly will prevent fish and water from entering the interior pond during reservoir storage, allow the interior to drain during low reservoir levels; it would allow the interior to be back flooded in case of an overtopping event. Operation of the flap gate involves leaving the gate closed during summer storage periods when the reservoir elevation will exceed 1165 feet NGVD, and opening the gate after the storage season to allow back flooding during a possible winter storm flood event.

Access road 2 will allow access from the el. 1181 deck to the area in front of the spillway (approximate el. 1166 feet). Access road 2 is approximately 215 feet long with a maximum slope of 9 percent.

Access road 3 deleted from this phase of the project and will be included during the Phase II Pool Raise.

The el. 1181 deck will be constructed of concrete pavement to allow use by heavy equipment and stoplog storage. The location of stoplog storage will be along the south side of the el. 1181 deck, and the method of transporting the stoplogs from the gantry crane operating area to the storage site will be by forklift (see Chapter 10, Mechanical Design).

Fish transport trucks will also use the el. 1181 deck to access the fish monitoring station. A 10 percent slope ramp down to el. 1177.5 providing fish transport trucks back-in access and forward egress.

8.2.2.2 Landscaping

Landscaping will include the fill and hydroseeding of the existing sedimentation pond area. The hydroseed will be used to prevent erosion and provide a more permanent solution to protect the slopes. Native seed will be used because of its minimal impact to the natural environment around the site and because virtually no maintenance will be needed to maintain the site. Rock Spalls and rip rap will be used in other areas.

8.2.3 Utilities

New utilities for this project will include water supply to the new tower, aboveground fire protection tanks and an underground sewage holding tank.

8.2.3.1 Sanitary Sewer System

Sewage will flow via gravity to an underground sewage holding tank that a commercial waste truck can access at the el. 1181 deck. The holding tank will be drained by a truck weekly.

The tank will have a vent that will extend to el. 1254 as a measure of defense against both odor and contamination during flooding. When the reservoir pool elevations are expected to exceed el. 1179 the sewage holding tank will be pumped and filled with water. The tank will be pumped after the pool returns below el. 1165 or as determined by dam personnel. A sewage holding tank based on 5 gallons per capita day (gpcd) times 6 persons for a 30 gpcd will be utilized. A 900 gallon holding tank is based on a 7 day pumping interval (Washington State Department of Health, Holding Tank Sewage System, July 2007) 3 times the 30 gpcd design flow. Septic based on fixture units, and 7 day interval pumping. "Total liquid volume capacity" (TLVC) is 900 gallons based on 30 gpcd times 3 for non-residential usage (WAC 246272A232(c) Septic sizing for non-residential use). Tank will be equipped with both audible and visual alarm enunciators located outside the facility and set to signal at both the "time-to-pump" normal operating volume (NOV) 630 gallons capacity and the "exceeding reserve storage volume levels" NOV + reserve volume (RSV) 270 gallons = TLVC = 900 gallons capacity. Only the audible alarm may be turned off by the user. The tank and lid will be H20 rated.

8.2.3.2 Water System

The new domestic water supply well installed with the Administration Building, Volume 3 will be used to provide water to the new tower. The primary water supply requirement for the Monitoring Station will include 15 fixture units, 40 gpm. This will also supply 2-24,800 gallon aboveground fire protection storage tanks with eventually three dry barrel hydrants. Water supply systems for the fish fill water, and fish monitoring system will be provided by the wet well system (see Chapter 10, Mechanical Design). Water will be provided by a 8-inch waterline from the tanks for approximately 1350 feet to the fish passage facility.

8.2.3.3 Storm Drainage

Stormwater from the 1181 foot elevation concrete deck will be collected by trench drains and 2 coalescing oil water separators. Storm water collected at the bottom of the fish truck loading ramp will be filtered at the catch basin with absorbent media then pumped to the oil water separator. The oil water separators will discharge to the reservoir and the outlet pipes fitted with flexible flap gates. Oil water separators will be 877 gpm (1.95 cfs) 10 parts per million effluent quality removing 60 micron and larger, and lids will be H20 loading rated.

Normal maintenance of the oil/water separators will be removal and cleaning of the coalescing plates before and after fish season annually or more frequently as required. Wash water in the separator will be replaced with clean water before returning to service. Accumulated oil will be removed when the thickness reaches 1/2-inch, sludge deposits will be removed when the thickness reaches 3 inches. When the reservoir pool elevations are expected to exceed el. 1179 the oil/water separator overflow and outlet valves will be closed and the coalescing plates removed and stored at the maintenance building. After the pool returns below el. 1165 the oil/water

separator will be pumped, coalescing plates replaced, valves opened, and filled with clean water before returning to service.

Stormwater collected via gravel access roads and spillway area will discharge to the reservoir as present.

While the project is well below best management practices for oil/water separators, because of the increased traffic and locality to the Howard Hanson Reservoir, coalescing type oil/water separators will process stormwater from the elevation 1181 deck before releasing to the reservoir.

Stormwater discharge is based on a 10-year design storm using King County 10-year 24-hour isopluvial of 4.5 inches. I=3.4 inches per hour, C=0.92 and 0.48 Acre is 1.50 cfs.

Flow frequency return values from Western Washington Hydrology Model (WWHM 3, V 1.0) are listed below for comparative purposes.

Flow Frequency

		Acres		King County Isopluvial Value
Total Area	1.224	0.620	0.480	0.480
		O/W 1	O/W 2	O/W 2
		Flow(cfs)		
2 Year =	0.5740	0.2908	0.2251	0.64
5 Year =	0.7433	0.3765	0.2915	
10 Year =	0.8605	0.4359	0.3375	1.50
25 Year =	1.0149	0.5141	0.3980	1.95
50 Year =	1.1346	0.5747	0.4450	
100 Year =	1.2586	0.6375	0.4935	2.35

Reference:

Stormwater Management Manual for Western Washington, 2005

Water Quality Design Storm: A 24-hour storm with a 6-month return frequency (a.k.a., 6-month, 24-hour storm). The 6-month, 24-hour storm can be estimated as 72% of the 2-year, 24hour rainfall amount for areas in western Washington.

Water Quality Design Storm Volume:
The volume of runoff predicted from a 6-month, 24-hour storm or the 91st percentile, 24-hour runoff volume indicated by an approved continuous runoff model.

Water Quality (WC) Design Flow Rate:
Preceding Detention Facilities or when Detention Facilities are not required. The flow rate at or below the 91% of the runoff volume.
Downstream of Detention Facilities: The full 2-year release rate from the detention facility.

Stormwater discharges shall match developed discharge durations to pre-developed durations for the range of pre-developed discharge rates from 50% of the 2-year peak flow up to the full 50-year peak flow.

King County Stormwater Manual, 2005

Water Quality Design Flow Rate:
Preceding Detention: 60% of the developed two-year peak flow rate, as determined using the King County Runoff Time Simulation (KCRTS) model with 15-minute time steps calibrated to site conditions. Note: if KCRTS is not being used on a project, the WQ design flow may also be estimated using 64% of the 2-year 24-hour precipitation in the (Santa Barbara Urban Hydrograph (SBUH) model.

Note: The Department of Ecology WWHM WQ design flow is based on the flow predicted by the SBUH model for 64% of the 2-year 24-hour precipitation. This is roughly equivalent to the WA design flows given for the KCRTS model.

Downstream of detention: The full 2-year release rate from the detention facility.

Designs using the Water Quality design flow above will treat a minimum of 95% of the annual average runoff volume in the (8 year) time series as determined with the KCRTS model.

8.2.4 Monitoring Station

8.2.4.1 Site Layout

The fish monitoring station will be located at the new FPF tower. The monitoring station itself will be designed by an A/E (FishPro). See Chapter 12, Monitoring Station Design.

8.2.4.2 Utilities

Water supply systems for the fish fill water, and fish monitoring system will be provided by the wet well system (see Chapter 10, Mechanical Design).

8.2.5 Administration Building (*Volume 3*)

8.2.5.1 General

The design of the new administration building and its associated appurtenances will be completed under a separate contract.

8.2.5.2 Site Layout

The proposed location of the new administration building is on the left bank of the reservoir. The proposed location of the new administration building was determined primarily from discussions with Seattle District's Operations Division staff and influenced by the lack of a suitable alternative on the right bank of the reservoir. One factor in favor of abandoning the location of the existing administration building is the close proximity to the logging road. Operations personnel identified noise, dust, and safety problems associated with the alignment of the logging road adjacent to the existing building, which could be reduced, but not entirely eliminated, should the new building be situated near the location of the existing structure.

8.2.5.3 Demolition

A limited number of existing trees need to be removed to accommodate the construction of the new administration building in its proposed location.

Demolition activities associated with the existing administration building are to be determined at a later date. Demolition of the existing administration building and associated appurtenances will include removing or abandoning existing utilities (water, sewer) and protecting existing geotechnical instrumentation equipment currently located in the building.

8.2.5.4 Landscaping

It has been requested that no formal landscaping be done around the new administration building to keep site maintenance to a minimum. It has been suggested that some formal rockwork be designed around the foundation of the structure to enhance appearance.

8.2.5.5 Utilities

Proposed utilities for the new administration building include water and sanitary sewer systems. Administration Building Water: (use Int'l Plumbing code E103.3(3)) Water supply fixture units = 39; yields 45.6 gpm peak flow, 5472 gph extreme peak, and 731.65 gph average flow

Maintenance Building Water: (use Int'l Plumbing code E103.3(3)) Water supply fixture units = 48; yields 49.2 gpm peak flow, 5904 gph extreme peak, and 801.53 gph average flow

For both buildings together:

Septic Holding tank: ((Washington State Department of Health, Holding Tank Sewage System, July 2007, p3.3.3) 35 gpcd, 20 people, NOV = 4900 gal, RSV = 2100 gal, TLVC = 7000 gallon. Tanks will be equipped with alarms similar to p 8.2.5 Fish Passage Facility Utilities.

Sewer: gravity flow, 6 inch diameter line from each building, to one central holding tank, 3.5% slope from Maintenance Building, and 5% slope from Administration building, both meeting minimum velocity.

Stormwater: downspouts on both buildings, downspouts on Administration building plumbed directly to leashing chambers. Two infiltration basins, fed by grassed swales, will infiltrate all the flow into them.

8.2.6 Maintenance Building (*Volume 3*)

8.2.6.1 General

The design of the new maintenance building addition and its associated appurtenances will be completed under a separate contract.

8.2.6.2 Site Layout

The new maintenance building is designed as an add-on to the pre-engineered maintenance building that was constructed in summer 2000. To provide traffic flow through the two buildings, an opening will be cut into the common wall joining the two structures.

8.2.6.3 Demolition

No demolition of existing physical structures is anticipated prior to construction of the maintenance building addition. However, to accommodate grading activities associated with construction of the building and sanitary system, a limited number of existing trees need to be removed.

8.2.6.4 Landscaping

It has been requested that no formal landscaping be done around the maintenance building, to keep onsite maintenance to a minimum. It has been suggested that some formal rockwork be designed around the foundation of the structure to have a more clean appearance.

8.2.6.5 Utilities

Proposed utilities for the new maintenance building addition include water and sanitary sewer systems.
(See 8.2.8.5 above for both building together)

CHAPTER 9 ARCHITECTURAL DESIGN

9.1 GENERAL

Architectural design for the Additional Water Storage (AWS) project Fish Passage Facility is concerned with the life safety, code compliance and aesthetics of the facility. Additionally, a new administration building and maintenance building addition will be constructed under a separate contract as part of the Fish Passage Facility project. Though ancillary to the AWS project and the fish passage facility, these buildings will be necessary for its effective management. The primary support functions of these buildings will be as follows:

- Administration Building: This building will provide for the future operational and administrative needs of the HHD Project, including the AWS Project features.
- Maintenance Building: This building, an addition to the existing maintenance building, will provide for future maintenance and repair needs of the new tower structure associated with the fish passage facility.

9.2 CRITERIA REFERENCES

- International Building Code (IBC): 2003Edition
- National Fire Protection Association (NFPA) 101, Life Safety Code: 2003 Edition
- USACE, Safety and Health Requirements Manual (EM 385-1-1): 3 Sep 1996 Edition
- Uniform Federal Accessibility Standards
- ADA Accessibility Guidelines



Figure 9-1. Standing at dam tower, looking northeast towards reservoir

9.3 DESIGN CRITERIA

9.3.1 Exterior Influences

The project site at Howard Hanson Dam is in a remarkably beautiful setting with views of snow-topped mountains toward the east and wooded hills surrounding the reservoir and project site.



Figure 9-2. View of aesthetic concrete form found at tower.

The dam tower and spillway, massive concrete structures in an otherwise natural setting, create a well-defined contrast between manmade and natural features. These structures have pleasing aesthetic forms, and it is an objective of the architectural design to provide buildings that will integrate well in form and materials with the existing buildings.

A logging road, located on the right bank of the reservoir and north of the dam, provides access to the site. (Refer to Figures 1-2 and 1-3.) The site is separated from the road by an 8-foot-tall chain link fence topped with barbed wire.

Within this fencing and south of the road stands the existing administration building, a small concrete masonry unit (CMU) structure. Parking for the building is just south of the structure. Lying south of the parking are two roads providing access to the dam's tower and spillway as well as the left bank of the reservoir. The left road leads downgrade to the dam's tower platform and the spillway; the right road leads to the tower bridge. Either of these roads affords access to the left bank of the reservoir during normal conditions. However, during flooding events and high water, access to the left bank is possible only by the right, upper road, and then only following road improvements.

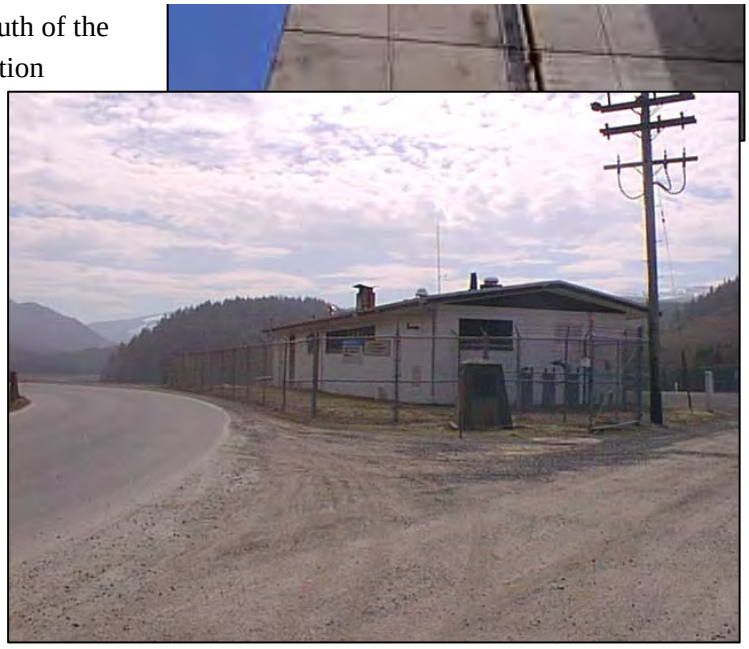

Figure 9-3. Looking east, towards existing administration building.

9.4 BASIC ANALYSIS

9.4.1 Master Plan/Future Expansion

The addition of the AWS Project and fish monitoring functions to the HHD Project has caused some amount of uncertainty about the support needs at the dam. Key questions include: What type of maintenance, repair and administrative functions will be required at these new facilities? What types of spaces will be needed to support this maintenance, repair and administrative work? How many personnel will be needed to run the facility effectively? At this time, rough estimates have been made on types of spaces, square footage and personnel requirements. However, design of the buildings must allow for future expansion. Additionally, the design should provide for smooth transition within the building interiors, if space requirements mandate change.

9.4.2 Interior Composition

9.4.2.1 Fish Passage Facility

The table below shows initial estimated net square footages for each of the required spaces within the fish passage facility.

TABLE 9-1. ESTIMATED SQUARE FOOTAGES, FISH PASSAGE FACILITY BUILDING

Space	Floor	No. of Persons in Space	Est. Net Room Size (Sq. Ft.)
Sump Room	1	NA	247
1st Floor Tower	1	NA	290
Elevator Pit Access	1	NA	78
2nd Floor Tower	2	NA	733
Radial Gate Inspection Access	2	NA	31
Fish well Access Gallery	2	NA	122
Catwalk	3	NA	330
4th Floor Tower	4	NA	760
Gallery #1 - #6	4-9	NA	702 (4212 total)
5th – 11th Floor Tower	5-11	Up to 8	775 (5425 total)
IFS Mech Rooms #1-#4	5-8	NA	92 (368 total)
Personnel Access Tunnel	5	NA	469
12th - 13th Floor Tower	12-13	NA	798 (1596 total)
14th Floor Tower (Control Room)	14	Up to 2	988
15th Floor Tower (Elec/Mech)	15	NA	962
Elevator Machine Room	15	NA	187
Egress Stair (per Floor)	1-15	NA	155 (2325 total)
Elevator Shaft (per Floor)	2-14	NA	80 (1040 total)
ESTIMATED TOTAL			**20,163**

9.4.3 Accessibility

The buildings can be accessed from two different roadways.

The first roadway begins on the right bank of the reservoir. Traveling downgrade, the road provides access to the tower platform. From the platform, it continues along the left bank of the reservoir, climbing gradually to the elevation of the proposed maintenance and administration buildings. This is the roadway that will be utilized when necessary to bring pieces of the tower up to the maintenance shed for repair.

The second roadway also begins on the right bank of the reservoir but gains access to the left bank by crossing the top of the dam. As part of the project, a small notch, or dip, along the roadway will be raised and leveled. Following this construction work, the roadway will be the only accessible means to the site during a high-flood event.

The interior of the buildings will be accessible as required by the Uniform Federal Accessibility Standards and the ADA Accessible Guidelines.

9.4.4 Fire Protection and Life Safety

Construction type will be Type I-A. Per the IBC, this facility is classified as a Group B (Business) occupancy, with unlimited height and area limitations. Only one exit is required; one is provided, along with tunnel access to the existing tower at the 5th Floor. A single egress stair is permitted by NFPA 101 – 40.2.4.1.2, which states "A single means of egress shall be permitted from any story or section in low and ordinary hazard industrial occupancies, provided that the exit can be reached within the distance permitted as a common path of travel (50' per table 40.2.5 – 100' with an approved fire sprinkler system). All tower floors and galleries below grade are unoccupied spaces, with exception of the storage room located on the 7th Floor. The facility is fully sprinklered. Required fire resistance ratings for the structure (3 hours for structural walls and 2 hours for floors) mitigate the increased risk to the safety of occupants in this space, provided that all openings are protected. This shall include but not be limited to fire stopping of penetrations, fire rated door assemblies and fire dampers in mechanical ventilation openings. The single means of egress stair is required to have a 2-hour fire rating. Per NFPA 101 7.1.3.2 (6), penetrations into and openings through the stair assembly shall be limited to the following:

- (a) Doors (1 ½ Hour Fire Resistance Rated)
- (b) Electrical conduit serving the stairway
- (c) Ductwork and equipment necessary for independent stair pressurization.
- (d) Standpipes
- (e) Penetrations for fire alarm circuits in metal conduits with penetration protection.

9.5 BUILDING SYSTEMS, MATERIAL AND EQUIPMENT

9.5.1 General

Erosion control measures will be employed during construction.

9.5.2 Concrete

All spaces in the building will have exposed concrete finish. Exterior walls will be scored at regular intervals.

9.5.3 Thermal and Moisture Protection

Due to the massive concrete structure, no additional insulation is planned for the facility. Typical R value for concrete is 0.08 per inch, giving an R-value of 3.84 for a 4-foot 0-inch-thick wall. A waterproofing admixture will be added into exterior concrete below grade level. Exterior concrete above grade will be sealed with penetrating water repellent.

9.5.4 Doors and Windows

All doors with access to the exterior below elevation 1228 feet or where water is normally present (e.g., IFS Mechanical Rooms) shall be watertight. Quick Acting watertight doors will be installed at 1181, 1194 and 1196 feet.

Windows / storefront glazing shall be aluminum framed with a thermal break and double-pane glazing units.

9.5.5 Finishes

Floors shall all be sealed concrete or metal grating.

Walls shall be smooth concrete finish.

Restroom at level 1181 feet shall have a ceramic tile wainscot & wall base.

9.5.6 Furnishings

Space for a desk and 2 file cabinets will be provided at the 14th floor el. 1228 feet as part of the fish monitoring station.

9.5.7 Color Selection

Material and color selections have been made with durability and maintenance needs in mind.

CHAPTER 10 MECHANICAL DESIGN

10.1 DESIGN CRITERIA

The following documents are used as mechanical design criteria:

- Except as revised here-in, Appendix D of the Final Feasibility Report, Design Considerations and Criteria, outlines the general scope of the mechanical design. Published after the 10 September 99 meeting with the Fish Passage Technical Committee (FPTC).
- EM 1110-2-1424 Lubricants and Hydraulic Fluids (28 Feb 1999)
- EM 1110-2-2105 Hydraulic Steel Structures (31 May 1994)
- EM 1110-2-2607 Planning and Design of Navigation Dams (31 July 1995)
- EM 1110-2-2610 Lock and Dam Gate Operating and Control Systems (2 April 2004)
- EM 1110-2-2701 Vertical Lift Gates (30 Nov 1997)
- EM 1110-2-2702 Design of Spillway Tainter Gates (01 Jan 2000)
- EM 1110-2-2703 Lock Gates and Operating Equipment (30 June 1994)
- EM 1110-2-3105 Mechanical and Electrical Design of Pumping Stations (30 Nov 1999)
- EM 1110-2-3200 Wire Rope Selection Criteria for Gate-Operating Devices (02 Apr 2004)
- EM 1110-2-4205 Hydroelectric Power Plants Mechanical Design (30 June 1995)
- ER 1110-2-8159 Life Cycle Design and Performance (31 Oct 1997)
- ER 1110-345-700 Design Analysis, Drawings, and Specifications (30 May 1997)
- ERDC-CERL TR-02-7 Advanced Materials Selection Guide for Lock, Dam, and Hydroelectric Plant Components (January 2002)
- ETL 1110-2-553 Control Stations and Control Systems for Navigation Locks and Dams (30 May 1997)
- TI-800-01, Design Criteria (16 Sep 2005)
- TI-810-90, Elevator Systems (03 Aug 1998)
- UFC 3-310-03A, Design: Seismic Design for Buildings (01 Mar 2005)
- UFC 3-400-01, Design: Energy Conservation (5 July 2002)
- UFC 3-400-02, Design: Engineering Weather Data (28 Feb 2003)

- UFC 3-410-01FA, Design: Heating, Ventilating, and Air Conditioning (15 May 2003)
- UFC 3-410-02A, Design: Heating, Ventilating, and Air Conditioning (HVAC) Control Systems (15 May 2003)
- UFC 3-420-01, Design: Plumbing Systems (25 Oct 2004)
- UFC 3-420-02FA, Design: Compressed Air (15 May 2003)
- UFC 3-600-01, Design: Fire Protection Engineering for Facilities (17 Apr 2003)
- UFGS-15010A Hydraulic Power Systems for Civil Works Structures (December 2001)
- Coastal & Hydraulics Laboratory Publication "Hydraulic Design Criteria", Section 200, Outlet Works, Nov 1987
- ASHRAE Handbooks (editions as noted in Appendix, Mechanical Design Calculations)
- ASHRAE 62.1-2004 Ventilation for Acceptable Indoor Air Quality
- ASHRAE 90.1-2004 Energy Standard For Buildings
- ACGIH "Industrial Ventilation" 16th edition, American Conference of Governmental Industrial Hygienists
- NFPA 13, Installation of Sprinkler Systems
- NFPA 14, Installation of Standpipe and Hose Systems
- NFPA 20, Installation of Stationary Pumps for Fire Protection
- NFPA 22, Water Tanks for Private Fire Protection
- NFPA 90A, Installation of Air Conditioning and Ventilating Systems.
- NFPA 92A, Smoke Control Systems Utilizing Barriers and Pressure Differences
- NFPA 101 Life Safety Code Handbook (2006)
- Other NFPA codes as applicable
- International Building Code, 2006
- SMACNA, HVAC Duct System Design, 1990.
- SMACNA, HVAC Duct Construction Standards - Metal and Flexible, 1985.
- National Standard Plumbing Code

10.1.1 Life Cycle Design

All design decisions that were able to be made by mechanical designers alone were based upon the minimum life cycle costs to the maximum extent possible, in accordance with ER 1110-2-8159. Engineering decisions were not made solely to minimize first costs or to maximize the facility reliability regardless of cost. According to the ER, Life cycle costs include the initial project investment, and costs for operation, maintenance, repair, rehabilitation, and replacement.

Estimates for future rehabilitation or replacement must include the costs of all related work. Evaluation of life cycle costs should include a calculation of the present worth, based on constant dollar analysis, and using appropriate discount rates for future costs.

10.1.2 Material Selection

Materials are selected based upon the performance requirements in accordance with the life cycle design concept. For instances where material selection may not be clearly defined, those materials will be selected using ERDC-CERL TR-02-7, the Corps material selection guide for civil works facility components.

10.1.3 Minimum Factors of Safety

10.1.3.1 Machinery Components

In accordance with EM 1110-2-2610, all mechanical components should be designed for the maximum normal full load torque of the electric motor, or the maximum effective hydraulic actuator pressure, with a minimum factor of safety of five (5.0) based on the ultimate tensile strength of the material. All components should be designed for a unit stress not to exceed 75 percent of the yield strength of the material, using the locked rotor torque rating of the electric motor, or the maximum hydraulic actuator pressure available through the control system.

10.1.3.2 Hoists

In accordance with EM 1110-2-4205, all permanent hoists and cranes shall have a minimum factor of safety of five, based on the maximum design loads.

10.1.3.3 Hydraulic Cylinders

In accordance with UFGS-15010A, hydraulic cylinders shall be designed to withstand the maximum operating pressure in the system with a factor of safety of 5 based on the ultimate strength of the material or 2 based on the yield strength of the material. A factor of safety of 3 shall be applied to the compression load when designing the hydraulic cylinders to resist buckling.

10.1.3.4 Hydraulic Piping

Where hydraulic shock is expected to occur, in accordance with EM 1110-2-2610, all hydraulic piping, including tubing and flexible hose assemblies, shall be designed for a factor of safety of eight based upon the maximum normal operating pressure. As a minimum, In accordance with UFGS-15010A, pipe and tubing shall have wall thickness selected to provide a safety factor of 6 based on the manufacturer's ratings for burst strength.

10.1.4 Pipe Velocities

10.1.4.1 Water Piping Velocities

In accordance with EM 1110-2-4205, steel pipe water velocities will be designed to be between eight to twelve feet per second to the maximum extent possible. Copper pipe water velocities will be limited to no more than seven feet per second.

10.1.4.2 Hydraulic Piping Velocities

In accordance with EM 1110-2-2610, main pressure lines will be designed for a velocity of ten to fifteen feet per second, and return lines will be designed for a velocity no greater than ten feet per second. Pump suction lines will be designed for a velocity of two to five feet per second, where applicable.

10.1.5 Pressure Testing

10.1.5.1 Water Piping

In accordance with EM 1110-2-4205, all water piping will be tested to 1.5 times the maximum working pressure (embedded piping prior to embedment) with a minimum test pressure of 100 psi. Drainage, waste, and vent piping will be tested to a minimum 10 feet of head.

10.1.5.2 Hydraulic Cylinders

In accordance with UFGS-15010A, each hydraulic cylinder shall be tested to 200 percent of the severest service rating.

10.1.5.3 Hydraulic Piping

In accordance with UFGS-15010A, the hydraulic piping systems shall be tested to no less than 125 percent of the design working pressure.

10.2 FEATURE DESCRIPTION

10.2.1 Cofferdam

The cofferdam consists of the upstream portions at the entrance to the fish passage facility. The cofferdam contains the trashrack, the entrance guide walls, the entrance well located between the trashrack and the fish collector array, the dewatering stoplog slot in the entrance well, and the cofferdam intake screen located upstream of the dewatering stoplog slot. The invert of the entrance well is elevation 1060 feet, and the top deck is at elevation 1181 feet. A portion of the rails for the project gantry crane are located on the top deck (el. 1181) of the cofferdam.

10.2.1.1 Trashrack

The purpose of the trashrack is to protect components of the FPF from large debris. The trashrack grid openings are sized to exclude large, potentially damaging debris from flowing into the facility, without adversely delaying fish passage through narrow openings. The water levels on both sides of the trashrack will be monitored to signal debris overloading of the trashrack, which would be indicated by the development of any significant water level differential across the trashrack.

10.2.1.2 Dewatering Stoplogs

The dewatering stoplogs will be used for dewatering the fish passage facility. The set of dewatering stoplogs will reach elevation 1169 feet, which is two feet higher than the Phase I maximum operating pool (1167), but is 8 feet lower than the Phase II maximum operating pool (1177). Typically the facility will be dewatered during the winter for scheduled annual maintenance. The facility may also need to be dewatered during the normal operating season for emergency repairs or inspections. Because the dewatering stoplogs only reach elevation 1169 feet as currently designed, there will be some situations where the reservoir level may be too high to safely attempt dewatering of the facility, and dewatering will need to be postponed until the reservoir level is drawn down to elevation 1167 feet or lower. The gantry crane will be used to install/remove the stoplogs into and out of the slot. The location of stoplog storage will be along the south edge of the el. 1181 operating deck, and the method of transporting the stoplogs from the gantry crane operating area to the storage site will be by forklift.

10.2.1.3 Gantry Crane (future contract)

- Debris Removal: A pedestal crane featuring a separate lattice boom crane will be mounted on top of the gantry structure for debris removal; the crane will have sufficient reach for both the existing flood regulating tower trashrack and the fish tower trashrack. With a 15-ton load and a 5-minute lift for 177 feet, a hoist with an overall efficiency of 65 percent would require a 50-horsepower motor. While the breakaway load for debris may be 15 tons, the dead weight of debris to be removed will likely be substantially less. For illustrative purposes, 10 tons of wood debris at a specific gravity of 1 could be a 100-foot long, 2-foot diameter log. Winch speed for debris handing will be 300 fpm (variable speed); rotation will be limited by the existing tower; drawings show 270 degrees for now. The hoists will be equipped with friction brakes capable of releasing an excessive load as determined by a Load Moment Indicator (LMI).
- Dewatering Stoplog Hoist: the dewatering stoplogs may weigh up to 25 tons each. The lifting distance will be as much as 146 feet (from elevation 1035 to 1181 feet) plus the height required for clearance. The main hoist will feature a 50-horsepower motor.
- Emergency Gate Stoplog: the existing e-gate stoplog weighs approximately 45 tons. The lifting distance will be roughly 41 feet plus the height required for clearance. A

separate hoist dedicated for this service will feature a 20 HP motor, assuming a lifting time of 10 minutes and an overall efficiency of 65%.

- A 90-ton rough terrain ("RT") mobile crane is assumed available for rent or lease to this project. The gantry crane reach is limited to the area near the cofferdam. A mobile crane would be required for any heavy picks needed in the wet well or fish well areas (considered a rare occurrence), or for occasions when equipment needs to be completely hoisted out of the tower through the roof (again, considered a rare occurrence). A mobile crane is therefore optional, and not an item considered critical to operation of the facility.

10.2.1.4 Cofferdam Intake Pipe

The cofferdam intake pipe was constructed as a part of the cofferdam construction contract. It is a ten-inch Schedule 80 galvanized steel pipe with a screened intake section located upstream of the dewatering stoplog slot. The intake, with a centerline elevation of 1072.5 feet, is a 5-foot by 5-foot square opening that transitions to the 10-inch round pipe. The opening is screened with stainless steel Hendrick B-69 bar screen, with 0.069-inch bar spacing, mounted on a removable frame. A grid of compressed air nozzles located behind the screen, fed by a 2-inch compressed air pipe, can be used for periodic airburst cleaning of the screen to prevent the screen from clogging with debris and/or organic matter. NMFS criterion for active screens (screens with a cleaning system) is a maximum screen approach velocity of 0.4 feet per second. Based on the size of the screened opening, the maximum design flow rate for the intake pipe will be limited to 10 CFS so that the maximum allowable approach velocity is not exceeded.

A ten-inch wedge gate valve is installed on the end of the cofferdam intake pipe branch. This valve will be closed during construction to prevent flooding of the area downstream of the cofferdam during reservoir pool events above the elevation of the pipe intake. The new piping that will be installed during the fish passage facility contract will be connected to the downstream flange of this valve. As a minimum, the contractor will need to install the continuation of the facility refill piping at least as far as the next manual isolation valve located in the facility gallery prior to the pouring of concrete that will eventually embed much of the piping. The pressure testing of the piping (or segment of piping) will need to be done prior to embedment. Also, the wedge gate valve will need to be locked in the open position prior to embedment in concrete.

10.2.2 Attraction Water Conduit (AWC)

The attraction water conduit, with an invert elevation at 1029 feet, is the path of outflow for the majority of the flow passing through the fish passage facility. The AWC routes flow from the wet well to the existing flood control tunnel over a distance of approximately 151 feet. The radial gate, located approximately 60 feet downstream of the AWC intake, regulates the flow. The emergency gate is located upstream of the radial gate.

10.2.2.1 Radial Gate

The radial gate will be actuated by a pivoting hydraulic cylinder. Radial gate position will be monitored by a linear transducer mounted inside the hydraulic cylinder. The radial gate will modulate to control the amount of flow through the fish passage facility. See Chapter 5, Hydraulic Design, for the radial gate design information. Access to the radial gate is via the radial gate chamber, which is above the gate. The radial gate cylinder can be transported into the open area of the tower via a removable section of the airshaft located above the cylinder. A jib crane located near the bottom of the tower will be used to transport the radial gate cylinder from its operating position to the location in the center of the open tower where it can be hoisted up through the equipment access openings. The design of the radial gate is left to the capability of the manufacturer; high strength steel requirements are detailed in the spec, for such things as fracture critical members. Trunnion foundation design (Structural) would be passive restraint type in lieu of post tensioning. The radial gate is not removable for replacement. This is considered acceptable given the low likelihood of significant damage due to debris, etc. Should gate replacement be necessary, a new design to be field assembled (bolted) would be required.

10.2.2.2 Air Vent

The air vent for the radial gate will be located directly above the radial gate cylinder. Refer to Chapter 5, Hydraulic Design, for the air vent design information.

10.2.2.3 Emergency Gate

The emergency gate will be used to dewater the AWC in the vicinity of the radial gate for scheduled maintenance and inspection, or more rarely, shut off facility flow in the event of malfunction of the radial gate. The emergency gate will be a bonneted slide gate. The emergency gate will be actuated by a vertical hydraulic cylinder mounted atop the gate bonnet. The gate will have two operating positions (fully open or fully closed), but the full extent of gate travel will be monitored by a linear transducer mounted inside the hydraulic cylinder. No emergency gate inspection room is provided. A jib crane is provided for hoisting the gate, bonnet, and cylinder; scheduled inspection of the dewatered gate slots and seals is not anticipated to require gate removal. Gate slots, babbit, seals, and block-outs will conform to the gate manufacturer's customary configuration. Since this gate is operated essentially as an opened or closed valve, the previous physical hydraulic modeling of the outlet works is considered adequate. The design of the emergency gate is left to the capability of the manufacturer; high strength steel requirements are detailed in the spec, for such things as fracture critical members. The emergency gate is theoretically removable for replacement.

10.2.3 Chambers Connected to the Wet Well

The flooded chambers of the FPF can be split into two main sections: the fish well, and the wet well. The wet well actually consists of multiple interconnected chambers, including the wet well, the fish collectors, the fish collector access alcoves, and the portion of the entrance well that is downstream of the dewatering stoplogs – so the effective volume of the wet well is much

larger than the volume of the fish well (approximately 3 times larger). The fish well can be dewatered at any time by closing all of the fish bypass valves and draining the fish well with the drain valve. The wet well can not be drained until the dewatering stoplogs are installed into the stoplog slot in the cofferdam (the stoplogs go up to el. 1169). Additionally, the wet well should not be drained without also draining the fish well. The wet well and its interconnected chambers are considered normally inaccessible chambers, since they cannot be safely entered unless the FPF is dewatered.

10.2.3.1 Wet Well

The wet well is open to the atmosphere. The wet well and its interconnected chambers must be refilled prior to the removal of the dewatering stoplogs. The wet well is refilled using the facility refill pipe (see 10.2.7.2). During fish passage operation, water enters the wet well from the entrance well via either one or two operating fish collectors, and water exits the wet well via the AWC. Additionally, a drum screen located on the outlet of the wet well refill pipe will also be used as the water source for monitoring station life support water. This wet well intake screen is selected over the cofferdam intake screen as the primary life support water source for two reasons:

The water in the wet well is water that has passed through operating fish collectors, meaning that it is of the same temperature as water that fish have been bypassed in. That will minimize the risk of thermal shock to fish in the monitoring station.

Using the wet well intake will not create any undesirable attraction flow that fish could sense upstream of the fish collector entrances.

10.2.3.2 Fish Collector Access Alcoves

A submerged chamber (fish collector access alcove) provides access to a fish collector from above, for fish collectors numbers one through four. Fish collector number five is accessed via a watertight ceiling hatch. The facility must be dewatered in order to enter the fish collector access alcoves.

The access alcoves have vertical watertight doors to the access galleries. A floor hatch in the fish collector access alcove (not watertight) provides access to the fish collector. To access an inclined fish screen actuator assembly, go through the floor hatch and arrive on top of a inclined fish screen which has been set to the horizontal position, walk to the upstream end, and stepladder down to the chamber floor. The screen actuator assembly is located in a trench underneath the screen.

10.2.3.3 Fish Collectors

There are five fish collectors, which are essentially conduits connecting the entrance well to the wet well, along with fish bypass pipes going to the fish well. Each collector consists of an intake horn, followed by a rectangular inclined fish screen (IFS) chamber (although complete IFS assemblies will be provided only for fish collectors number 3 and 4 in the initial construction contract - future screens will be provided after testing of the prototype screens is completed), and the approach guidewalls to the bypass pipe intake, followed by the fish bypass pipe and the outlet

into the wet well. A downstream-opening miter gate, used for shutting off flow to its fish collector, is located at the outlet into the wet well. The design flow rate is between 220 CFS and 600 CFS per collector. The facility is designed for operation of either one or two fish collectors at a time.

10.2.4 Inclined Fish Screen (IFS)

The IFS is the inclined screen within the fish collector, which screens the fish from the majority of the attraction flow. The IFS has a pivot point near the center of the screen, which allows the screen to be rotated for backflushing to remove debris. A hydraulic cylinder powered linkage located beneath the IFS will be used to rotate the screen and to maintain the operating positions of the screen. The cylinder and linkage will be submerged during operation. Screen rotation for backflushing can be initiated both manually at the control panel and automatically by the PLC. Automatic screen rotation will occur if the entrance well to wet well water level differential exceeds a maximum setpoint based on the specific attraction flow per collector (indicating a clogged screen). Additionally, a timer may be used to initiate screen rotation at specific time intervals.

If dual collectors are operational, then the pressure differential alone will not suffice to be able to determine which collector needs to be backflushed for cleaning. Velocity monitoring within each collector may be one method that could be used – the collector with the lower overall flow rate will be the one which requires backflushing. However, velocity measurement would be problematic because of the necessity to avoid placing obstructions in the path of the IFS arc of rotation (and the path of fish). Also, multiple velocity measurement locations would be required in order to be able to determine the overall flow rate through the fish collector, and this would be complicated by the restrictions previously mentioned. The most practical way of monitoring dual collector debris loading of the screens may be visual inspection. Visual monitoring of debris loading of the screens would require viewing capability inside the collectors (viewports through the walls, with cameras and underwater lighting). This may be the most practical way to determine which of the two operating collectors is the one requiring rotation to backflush accumulated debris.

At this time the design operating differential across the screen is assumed to be 5 feet of water at maximum design flow, which may change (increase or decrease) depending upon the final design of the screen and screen support system. The maximum design load for the screen was assumed to be 10 feet of water, to provide an additional safety margin to account for unknown hydrodynamic loads (during screen rotation) and for extreme operating scenarios such as sudden debris loadings leading to rapid screen clogging.

Previously some consideration was given to outfitting each IFS with a compressed air nozzle grid underneath the screen, to provide extra cleaning capability in addition to backflushing. The addition of compressed air cleaning was dropped from the design because it was considered to cause more problems than benefits:

- The effectiveness of compressed air nozzles may be reduced when in a high velocity flow. So far we have not found any other examples of actual operating high-velocity inclined screens that have used compressed air as a cleaning system.
- The compressed air nozzle grid would increase the head loss through the screen and increase loads on the structure and actuators, and would, by its own presence, lower the effectiveness of cleaning by backflushing.
- There are sufficient examples of successful applications of backflushing screen cleaning designs (Puntledge and other Eicher Screens, MIS) that there did not seem to be any justification for providing any supplementary screen cleaning methods such as compressed air.

10.2.5 Fish Collector Miter Gates

Flow through each fish collector will be shut off by a miter gate located at the downstream end of each collector. The miter gate will create a hydraulic seal between the entrance well and the wet well and will stop flow through a collector. The miter gate will consist of dual vertical gate leaves that will each be actuated by a hydraulic cylinder. During FPF operation, there will always be at least one miter gate in the open position to allow flow to enter the wet well. When there is a fish collector change then the miter gate of the new fish collector will open before the previously operating collector's miter gate is closed. The miter gates will be designed for a maximum operating head differential (entrance well to wet well) of 10 feet of water. Gate speed will be limited to no more than 10 feet per minute, in accordance with the section of EM 1110-2-4205 that describes intake gate hoists and recommends that the lowering speed of the gate at the point of contact with the sill should not exceed 10 feet per minute. Some consideration was given to installing relief panels (blowout panels) in a previous version of the gate design which would have used vertical slide gates. When evaluating the slide gate design, relief panels in the gates would have been an added safety feature in case of rapid wet well drainage caused by multiple component failures. The new design which utilizes miter gates has additional built-in fail safe operating features that lessen the need for relief panels. The miter gate will automatically open if the gates are overloaded, with the use of pressure relief valves. Also, having two gate leaves instead of one makes it more likely to be able to open at least half of the gate if one side is jammed.

10.2.6 Fish Bypass Pipes

A fish bypass pipe is located at the top of the downstream end of each IFS chamber. Guide walls along the top sides of the chamber direct fish that are flowing along the IFS into the bypass entrance. The bypass entrance is 3 feet wide by 15 inches tall, with a gradual transition to a 26-inch diameter pipe. The bypass pipe continues downstream until it penetrates the fish well wall and exits into the fish well. There is a diffuser at the end of the bypass conduit, just prior to the exit into the fish well. A 30-inch knife gate valve is located at the very downstream end to shut off the bypass pipe when it is not operating. The design flow rate for the fish bypass pipe is between 25 cfs and 35 cfs. The water level differential between the entrance well and fish well

will drive the flow through the fish bypass pipe. The control device will be in the fish well drain pipe (either the energy recovery turbine flow controls or the drain bypass control valve). Fish well drain outflow will be controlled to maintain a steady water level in the fish well with the same flow rate entering the fish well (through one or two fish bypass pipes) as exiting the fish well through the drain pipe. Flowmeters on the fish well drain pipes will verify the bypass flow rate.

Bypass Flushing: There may be times when it is desired to substantially increase the bypass flow rate in order to flush out the bypass pipe to remove debris that may be lodged somewhere within it. The normal design velocities in the bypass conduit range from approximately 6 to 8 feet per second. It may be possible to flush out the bypass with a higher flow rate, and the limiting factor would be the maximum head that could be achieved. An estimated upper limit on the allowable bypass flow might be 70 CFS, which achieves a velocity of about 19 feet per second. The head loss through the bypass conduit at this flow rate is roughly between 8 and 10 feet.

10.2.7 Other Features Upstream of the Tower

10.2.7.1 Access Galleries

On the South side of the fish collector array there is a set of access galleries at various elevations within the structure. The bottom gallery is located at the same approximate elevation as the floor of the bottom fish collector. The subsequent galleries at higher elevations are located at elevations matching the floors of the collector access alcoves. The collector access alcove for fish collector number 1 is on the 2nd gallery level, and is accessed via a watertight door in the personnel access tunnel. The collector access alcoves on the 3rd, 4th, and 5th galleries are accessed via watertight doors in the galleries. The access galleries have walkways that start in the tower. Access galleries will be provided with ventilation and heating as required. Raw water hose bibs (utilizing the cofferdam intake screen or the wet well intake screen as the water source) will be located as required for wash down purposes. Drainage will be provided.

10.2.7.2 Facility Refill Piping

The facility refill pipe will be used to refill the wet well (and its interconnected chambers) and the fish well prior to removal of the dewatering stoplogs and commencement of fish passage operation. Refill piping is Schedule 80 galvanized steel. The main refill pipe consists of about 140 feet of 10-inch pipe. The wet well refill branch is about 20 feet of 10-inch pipe. The fish well refill branch is about 15 feet of 8-inch pipe.

The start of the refill pipe is the cofferdam intake screen, which is the water source for facility refill. From there, approximately 70 feet of pipe is routed within the concrete up to the point of penetration through the floor of the gallery at elevation 1061.5 feet. Multiple ninety degree bends (using long-radius elbows) will route the embedded piping through thick sections of concrete without interfering with other embedded piping (debris slot cleaning piping) and to minimize interference with rebar placement.

The refill control valve is located just after the pipe penetration up through the floor of the gallery. Two manual knife gate valves are provided for isolation of the control valve, and a 4-inch bypass line is provided for use when the control valve needs to be isolated.

Downstream of the control valve assembly, the refill pipe travels straight through the gallery in a trench in the floor (the trench increases space for personnel access through the gallery). Midway down the gallery, a tee is provided for a branch to the pumps that provide monitoring station life support water. Farther down the gallery there is a tee that branches the final segments of the refill pipe to the wet well and the fish well.

The wet well branch is a vertical riser off of the main refill pipe that contains a manual isolation valve and then bends into the wall and ends with a drum screen on the other side of the wet well wall at the outlet of the pipe. The drum screen will serve as the wet well refill port, and will also be used as an intake screen for the monitoring station life support water. A compressed air burst cleaning system will be provided to remove any debris or organic matter attached to the screen that does not get swept away by wet well flows alone.

The fish well branch is a reduced size (8-inch) line that is routed down through the concrete and then horizontally to the penetration in the fish well wall at a centerline elevation of 1052 feet. A manual isolation valve is located prior to the bend into the concrete, to isolate the fish well branch. The outlet of the pipe into the fish well is located underneath the fish well drain screen so that it does not affect operation of the fish hopper or serve as a possible hiding spot for fish. Additionally, a flap valve is located on the outlet into the fish well, to prevent backflow in the pipe line when the fish well is at a higher elevation than the wet well.

To simplify construction and account for pipe misalignment and minor expansion/contraction, dresser couplings will be located in the refill pipeline as needed.

10.2.8 Fish Well

The purpose of the fish well is to hold fish that have been bypassed through operating fish collectors until a sufficient quantity of fish have been collected to begin the next phase of the fish transport cycle (either monitoring the fish or transporting the fish around the dam).

There are six water inflow connections and two water outflow connections in the fish well. The five fish bypass pipes and the fish well refill pipe are the inflow connections. One large drain pipe and one smaller dewatering pipe are the outflow connections. There are additional, smaller pipe penetrations into the fish well that will be used for instrumentation purposes.

The fish well will be designed for continuous operation. That is, there will be continuous bypass flow entering the fish well while the fish passage facility is operational. Water carrying fish will flow into the fish well through either one or two bypass conduits from the operating fish collector(s). An amount of flow equal to the net inflow will be drained out of the fish well using either an energy recovery turbine (at higher pool elevations) or an energy dissipating control valve to maintain a steady water level in the fish well. A fish lifting hopper will be used to periodically hoist fish out of the fish well. Once hoisted above the el. 1181 deck, a flume system

will transfer the fish to monitoring station tanks, or directly to fish transport trucks which will take the fish to a release point downstream of the dam.

10.2.8.1 Fish Bypass Valves

Each of the five bypass pipes exiting the fish collectors penetrates the fish well wall via a bypass "port". The downstream end of each port is sealed by a knife gate valve (fish bypass valve), located in a blockout in the wall of the fish well. The function of the fish bypass valves will be to hydraulically seal the fish well from the bypass ports, and also to prevent fish that have already been collected within the fish well from entering a non-operating (stagnant) bypass pipe. Each fish bypass valve is actuated by a vertical hydraulic cylinder, using water hydraulics and fitted with proximity switches (submersible Go-Switches) to indicate full-open and full-closed gate positions. The valves and their actuators and appurtenances are recessed in blockouts in the fish well wall, and all openings are covered as flush as possible to limit the size and number of potential fish hiding spots, and also so that the fish lifting hopper can travel past the gates smoothly in both directions.

Hydraulic Head Acting on the fish bypass valves: The hydraulic path that will be sealed by the valves is primarily between the entrance well and the fish well (the upstream side of the bypass pipe is connected to both the entrance well and the wet well, but the entrance well is the primary controlling factor during operation). Under normal operating conditions, the fish well water level will be one or two feet lower than the entrance well water level, which will expose the closed fish bypass valves to one or two feet of head directed downstream. However, the maximum head acting on the valves will occur when the fish well is dewatered. The valves will be designed to seal against the high heads that would occur under these conditions. The maximum design heads (pressure acting towards the fish well) are measured from el. 1177 feet to the centerline of the bypass port outlet as follows:

- Fish bypass valve 1 (bottom) 106 feet
- Fish bypass valve 2 84 feet
- Fish bypass valve 3 62 feet
- Fish bypass valve 4 40 feet
- Fish bypass valve 5 (top) 18 feet

The sizes of the blockouts for the valves and operating equipment assumes all valves are the same size (sized for the highest pressure rating).

The actual operating design heads (for valve disc movement) will be much lower than the maximum sealing heads. Valve movement will not be necessary under most foreseeable operating scenarios with water differentials in excess of a few feet. A design operating head of 10 feet will be specified for the valve operators, which is conservative enough to account for a multitude of possible future alternative operating scenarios.

Valve Size: The fish bypass valves are 30-inch knife gate valves with a flush bottom and a port that matches the inner diameter of 30-inch schedule 40 pipe, which provides smooth flow conditions for the transported fish.

10.2.8.2 Fish Well Drain Pipe Inlet

The fish well drain pipe inlet is a 36-inch rounded inlet located to provide maximum uniformity of flows approaching it through the fish well drain screen. The 36-inch pipe splits into two 30-inch pipes that penetrate the west wall of the fish well at a centerline elevation of 1046 feet. The north branch serves the energy recovery turbine, and the south branch serves the turbine bypass line which contains an energy dissipating valve. All drain flow will be routed through the energy recovery turbine when there is sufficient upstream head available to generate power using the turbine. At all other times, and at times when the turbine is offline, all the drain flow will be routed through the bypass line and energy dissipating valve. Both the turbine and the energy dissipating valve can be isolated by manual knife gate valves located upstream and downstream of the device.

10.2.8.3 Energy Recovery Turbine

The fish well receives continuous inflow from the fish bypass pipes of the fish collectors. Bypass flow ranges from 25 cfs to 35 cfs per collector, and either one or two collectors operate at one time, for a total bypass flow range between 25 cfs and 70 cfs. The bypass inflow is matched by an equal drain flow out of the bottom of the fish well that maintains a steady level in the fish well. The fish well drain flow is fully screened by the fish well drain screen. Specialized energy dissipating valves are required to control the drain flow out of the fish well because of the large upstream head that had to be dissipated to atmospheric pressure in the small footprint available in the tower.

In 2007 the applicability of a hydroturbine was researched for the fish well drain pipe, to follow up on earlier mechanical section recommendations in 2004 after the idea had been brought up in the VE by John Mathis, a VE team member who proposed hydropower for the AWC. It turned out that a Francis turbine could accomplish the same energy dissipation and fit within a similar footprint as the sleeve valves we had been designing for, and the turbine also provided the benefit of producing clean, renewable energy instead of just wasting all of the energy potential that exists at this site. In November of 2007 the HHAW design team agreed to replace the main energy dissipating valve for controlling fish well drain flows with a Francis turbine that would generate electric power. The maximum output of the generator would be about 650 kW. This qualifies as a small hydro, or mini-hydro system.

Positive features of the fish well drain pipe hydro turbine

- Reduced life cycle cost for the fish passage facility
- Reduction of Greenhouse Gases. Electricity generated by this turbine would reduce CO_2 emissions by 1735 tons per year as compared to electricity generated from a coal-fired power plant.
- It provides a source of clean, renewable energy that would otherwise go wasted
- Contributes to national energy independence

- This has been done before. Southern Nevada Water Association replaced an existing energy dissipating valve with a Francis turbine to generate electricity in nearly an identical system to the one we are designing for HHAW.
- This system is exempt from FERC licensing because it is a small hydropower system (under 5 MW), it will be built at an existing dam, and it Is a federal project.
- All of the infrastructure required for the fish well drain turbine is already a part of the project design. The inflow is already fully screened and no additional fish protection is required. The turbine/generator physically replaces one energy dissipating valve from the old design.

Benefits of connecting the turbine to the electrical grid (preferred design)

- Makes sense economically
- No additional infrastructure or special equipment required. The turbine package comes with all of the equipment and controls required for connection to the grid.
- Turbine is unmanned and has automated controls.
- Grid provides a use for the energy produced.
- Make an agreement with the utility that sells electricity to Howard Hanson Dam. Utilities have an interest in adding clean renewable sources of energy to their portfolios. The preferred method would be to sell the excess power to the utility. Alternativelly, a special net metering agreement could be made where the excess energy produced over the course of the year would be a credit towards the amount of energy purchased from the utility, and any excess power would simply result in a zero-billing balance at the end of the year.

Alternatives to connection to the grid

A load bank (electric resistance – heating) would be a fairly inexpensive option, but it wastes all of the excess energy produced on site. By not connecting to the grid, the design of the generator and electrical controls changes and becomes more complex.

Energy storage alternatives are not practical because there is not enough energy consumption on site to use all of the energy produced over time. Additionally, energy storage alternatives would be extremely costly.

The most promising alternative may be to create a transportable fuel generated from the excess electricity. Hydrogen could be produced on site with an electrolyser. Water (H_2O) is split into hydrogen (H_2) and oxygen (O) using electrical current. The hydrogen could be used for electrical generation and it could be used to fuel hydrogen powered vehicles, including fuel cell vehicles which emit only water and heat as waste products. For example, the excess power could produce enough hydrogen to fuel a fleet of passenger cars (government vehicles?) for a driving range of about 1,500,000 miles. Compared to a typical passenger vehicle (2009 Toyota Camry, for example), this would be equivalent to 77 vehicles driving 15,000 miles per year, and would

remove 560 tons of CO_2 emissions per year. Hydrogen production would require investment in hydrogen generation, storage, and transportation equipment.

An innovative use for hydrogen produced on-site could be to fuel a fleet of fish transport trucks that is going to be growing in the near future (operating at HHD, MMD, and possible sharing with Tacoma Diversion Dam)

Design Details

The Francis turbine would handle the full flow variation of the fish well drainage piping (25 to 70 cfs) and would operate through a range of upstream heads from maximum head of about 125 feet to about half of the maximum head, or 62.5 feet. For conditions with lower operating heads, the fish well drain flow would be routed through a bypass valve. The system will include a 480 V-AC generator and switchgear and controls. The budgetary quote provided by Canyon Hydro in June of 2008 was $1,162,500 for the complete equipment package.

The amount of power produced by the turbine will vary with the fluctuation of the reservoir levels and also with the amount of bypass flow desired (from 25 cfs to 35 cfs per fish collector, with one or two collectors operating at a time). Detailed yearly calculations were made for both Phase I (max pool elevation 1167 ft) and Phase II (max pool elevation 1177 ft) conditions. The *average* amount of power produced by this turbine is about 1,650,000 kWh per year.

Pricing the value of the total power produced by the turbine at $0.05 per kWh, and assuming a nominal value of $2000 for annual maintenance costs, the turbine equipment package would have a simple payback within 14.5 years.

The power requirements of the fish passage facility are roughly estimated to be an average of 100 kW, which is only about 30% of the average power produced by the turbine.

There will be a significant excess of electricity generated, with a value of about 1,140,000 kWh per year.

The HHAW site has a generating potential for 10 MW or more if the total outflow of the fish passage facility was captured. This was proposed at the 2004 VE Study, but was not pursued due to perceived time limitations for studying and designing such a system. Our design for a 650 kW generator is only 6.5% of the maximum potential listed above.

The draft Howard Hanson Dam Water Control Manual written in April, 2000 contained in Section 8.07.b. “Hydroelectric Power”, a reference to future studies that did not take place. The paragraph stated that the city of Tacoma was issued a Preliminary Permit (Project No. 4014) by FERC for priority of application for a license to construct and to operate a hydroelectric project at Howard Hanson Dam, and a reconnaissance report done in 1982 (presumably by Tacoma) recommended detailed studies of a hydropower facility based upon a conservation pool raised from 1141 to 1185 feet. The paragraph ends stating “Hydropower will be evaluated in the AWS study since the Federal Government has a responsibility to insure that the addition of hydropower, whether by a Federal or local entity, does not preclude the optimization of the overall project for the greater public benefit.” To our knowledge, no studies have been done to

date, and attempts to bring the topic up for discussion have been met with opposition. Our success in including the small energy recovery turbine in the design is somewhat tempered by knowing how much more was left on the table, and also by our inability to convince decision makers to provide a more efficient grid-connected design.

10.2.8.4 Energy Dissipating Valve

An energy dissipating valve is required because of the extreme cavitation-inducing conditions that the valve will be exposed to. With the fish well drain pipe discharging to atmospheric pressure, and the very high heads upstream of the control valve (up to 132.5 feet when the fish well water surface is at a maximum elevation), conventional valves would fail rapidly from cavitation damage. Additionally, the space limitations at the bottom of the fish well prevent the use of multiple control valves in series or the use of some other more complex alternative solutions.

Initially the energy dissipating valve chosen was a sleeve valve, which consists of a concentric pipe with tapered, perforated holes around the circumference that direct downstream flow jets towards the center of the pipe and away from the valve walls. A sleeve controls the flow by sliding over the perforations to block or uncover additional flow ports. A sleeve valve for this application would be very large and costly, and likely would cause problems fitting into the space constraints in the tower. Therefore, a multi-orifice valve (MOV) by Ross Valve was chosen instead, because of its significantly smaller footprint. A MOV is a vertical disc with multiple orifices that are controlled by a second sliding disk that determines the flow opening sizes.

A V-cone flowmeter will be installed upstream of the energy dissipating valve. V-cone flowmeters can be installed with little to no upstream and downstream piping without significantly affecting their measurement accuracy, which makes them an ideal choice since there is extremely limited space available for routing piping in the bottom of the tower. An annubar flowmeter will be installed upstream of the energy recovery turbine (there is not enough space for other types of flowmeters in the turbine line).

Dismantling joints will be provided to facilitate installation and disassembly of the large valve and pipe assemblies.

The drain pipes converge into a common 30-inch drain pipe which penetrates the west wall of the tower and is routed, embedded in concrete, to a discharge point through the roof of the AWC a short distance downstream of the radial gate.

10.2.8.5 Fish Well Fill Piping

The fish well is filled using the facility refill piping (see section 10.2.7.2).

10.2.8.6 Fish Lifting Hopper

The fish lifting hopper will be used to remove fish from the fish well and deposit them into the flume system at the monitoring station/truck loading station. The hopper and its hoisting system were designed by an A/E (HDR/FishPro) and are described in Chapter 12.

10.2.8.7 Fish Well Drain Screen

The fish well drain piping will be screened to exclude fish, which could be present in the vicinity of the fish well drain inlets during hopper hoisting cycles, and to protect the fish well drain valves from damaging debris. The drain screen will be shaped to interface with the opening-floor of the fish hopper, and will also be sized to provide sufficient surface area to meet NMFS fish criteria. Cleaning the fish well drain screen will be accomplished by scraping the surface of the screen with the edge of the fish hopper floor during the hopper floor closing cycle. The screen will be inaccessible for manual cleaning except during facility outages when the fish well is dewatered.

10.2.8.8 Fish Well Debris Management

Debris flushed through the fish bypass pipes will continuously collect within the fish well. The majority of this debris will be intercepted by the fish hopper, and will be hoisted out of the fish well along with the fish during hopper hoisting cycles. Some debris will also collect in the fish well during the hopper hoisting cycles and may or may not be removed by the hopper during subsequent hoisting cycles. This debris may remain suspended in the fish well water column, or it may settle on the fish well drain screen at the bottom of the fish well. The hopper will require periodic cleaning when hoisted. Debris removed from the hopper may be stored in a debris bin located on the el. 1181 deck.

The fish well drain screen will not be accessible during normal FPF operation. Mechanical cleaning of the drain screen will be performed by a sweeping action of the hopper floor (see hopper description in Chapter 12). Even without the mechanical cleaning ability, the screen area is so large that it would need to experience significant clogging to create a pressure differential of a fraction of an inch of water. Pressure differential across the drain screen will be monitored with pressure transducers. In case of drain screen over clogging, the fish well will need to be dewatered and inspected manually via the watertight door at the bottom of the fish well.

10.2.9 Tower

The floors in the tower will be provided with ventilation and heating as required. Various locations will have hose bibs for wash down use. Hose bib water will be raw water, supplied from the cofferdam intake screen or the wet well intake screen. Drainage will be provided.

10.2.9.1 Tower Equipment Access Shaft

A central access shaft with a movable floor hatch will be provided at each floor elevation above elevation 1042 feet in the tower (including the roof). This access shaft will provide uninterrupted vertical access for the removal of large and/or heavy equipment out of the tower.

- A bridge crane is provided at the top of the tower (underneath the roof) for the purpose of hoisting heavy equipment up through the tower through the equipment access openings in the center of the floors. Bridge crane will have 5-ton capacity. Rails will be supported from the tower walls. Rails are required to move the hoist out of the way of the access hatch in the tower roof, should a

piece of equipment require removal through the roof of the tower with the use of a mobile crane.

- Since the bridge crane can only move equipment through the center of the tower (through the access openings), A 5-ton jib crane will be located near the bottom of the tower to assist in locating and transporting heavy equipment to/from the center access opening area. The jib crane will be used to move the AWC gate actuating cylinders, large valves, etc., that are located near the bottom of the tower.

10.2.9.2 Utility Shaft

A utility shaft will be provided along the north wall of the tower to provide uninterrupted vertical access for routing of mechanical and electrical utilities. The utility shaft will have walls for fire protection purposes.

10.2.9.3 Monitoring Station

Portions of the monitoring station will be located within the floors of the tower at el. 1181 and el. 1194. Life support water to the monitoring station will be provided through a pair of 25-hp pumps supplying continuous flow of 500 GPM of water from the wet well intake pipe. The pumps will operate one at a time, and alternate for even wear. The monitoring station itself will be designed by an A/E (HDR/FishPro) and is described more fully in Section 12

10.3 HYDRAULIC POWER EQUIPMENT

Hydraulic power will be used to operate the majority of the gates and valves in the FPF. Each system will be capable of being isolated such that any given system or sub-system could be provided with routine or emergency maintenance activities without affecting other components within the hydraulic system network. Each hydraulic power unit will have duplex hydraulic pumps, to allow repair or replacement of a pump without affecting the operation of the remaining equipment. General component details will be as follows:

- Threaded fittings shall be stainless steel and be the flareless type with SAE straight threads and O-ring seals.
- Hydraulic tubing will be used for sizes below 1-inch.
- Pipe will be used for sizes of 1-inch or larger.
- Accumulators shall be the bladder type suitable for charging with nitrogen.
- Relief valve settings should limit pressures to no more than 125 percent of normal maximum operating pressure, in accordance with EM 1110-2-2610.

10.3.1 Conventional Hydraulic Power Equipment

Conventional hydraulic power equipment will be used to operate the radial gate, the emergency gate, and several smaller valves throughout the FPF. Hydraulic components will be sized to operate below 3000 psi. Hydraulic fluid will be environmentally acceptable fluid, as defined below.

10.3.1.1 Hydraulic Fluid

According to EM 1110-2-1424 Section 8-7 "Environmentally Acceptable Guidelines", there are no specific standards or specifications that have been developed for guidance in determining which fluids or lubricants qualify as EA, other than that they must be nontoxic, and they must be readily biodegradable. Efforts are underway commercially to further define, and conform with, these characteristics, however much remains to be done before EA fluids are competitive with their HLP mineral based counterparts. Moreover, to qualify for use on this project, and environmentally acceptable fluid must not only satisfy the EM, but must also satisfy some added requirements. The fluid must have an oxidation stability such that changing the fluid on an annual basis is unnecessary. The fluid must feature a viscosity index of 140 or higher, have a flash point of 230 C or higher for fire resistance, and be available with additives for 'anti wear' for use in high pressure systems. Vegetable oil based fluids (HETG) offer excellent anti-wear qualities, however their stability beyond a year is questionable. Synthetic esters (HEES) are generally compatible with mineral oil; however anti-wear additives are lacking, and their stability is also unproven. Of the emerging EA products, nothing currently available satisfies all of the above needs.

Several synthesized hydrocarbon base fluids are available that, while not EA fluids, do satisfy the performance requirements otherwise. For example, a non-fire rated fluid from Mobil called SHC 524 is a polyalphaolefin based oil with additives for anti-wear. Mobil Pyrogard 53 (a phosphate ester synthetic, HFD-R) passes the Factory Mutual fire resistance tests and offers additives for anti-wear.

The AWC gate actuators are never submerged in the waterway. Hence the likelihood that any fluid leaking from the gate system will actually reach the waterway is small. Therefore, a non EA product is considered adequate. If this is deemed unacceptable, an HEES type product could be provided with the proviso from the manufacturer that yearly change-out by Operations will be expected.

10.3.2 Water Hydraulic Power Equipment

Water hydraulic power equipment will be used to operate the many submerged hydraulic cylinders in the FPF, to avoid the risk of oil leaks into the reservoir/river. Hydraulic fluid will either be tap water, or a mixture of tap water plus propylene glycol, depending upon operating needs. Equipment will be corrosion resistant and designed to operate using tap water as the operating fluid.

10.3.2.1 Fluid Characteristics

Use of tap water as a hydraulic fluid provides both benefits and challenges. The advantages of using tap water include:

- Water costs a fraction of mineral oils and other EA fluids.
- Water disposal (or leakage) has little or no impact on the environment.
- Water is nonflammable and can be used where high temperatures and oils could create fire hazards.

The specific challenges of using water hydraulics include:

- Water has low viscosity, so leakage is a concern. Components require tighter clearances.
- Water has low viscosity and low film strength, which means lower lubricity and higher wear.
- Water corrodes metal parts. Stainless steel and other corrosion-resistant materials are required.
- Water has higher vapor pressure than mineral oil which makes it more prone to cause cavitation. Pumps are being manufactured with smoother and larger flow areas and throttling valves are being redesigned with innovative flow geometries to mitigate the cavitation potential.
- Water freezes below 32º F, and requires the addition of antifreeze (a non-toxic propylene glycol) if used in sub-freezing conditions.
- Microbial growth can result in clogged filters and bad odors if not accounted for in the design.

Equipment designed specifically for use with water hydraulics is more expensive than conventional hydraulic equipment, because of the need for additional corrosion resistance, tighter clearances, lower lubricity in water, and additional attention to cavitation avoidance. The extra cost is offset by the reduced costs of the hydraulic fluid (nearly zero, if only tap water is used) and the long service life that is anticipated from the equipment.

The design and the maintenance of a water hydraulic system need to focus on the prevention of microbial growth. Proper maintenance procedures or use of chemical additives (which can also be used to prevent freezing) can control microbial growth. When using propylene glycol which is easily biodegradable, it is important to note that low glycol concentrations (<20% vol.) may provoke development of biofilm in the system. High glycol concentrations provide actual preserving effects, whereas low glycol concentrations act directly as bacterium nutrient (biodegradable). Danfoss recommends a 30% glycol concentration in the water hydraulics system to prevent microbial growth.

Water cleanliness and system cleanliness are also important factors. The filtration level should be 10 μm absolute or better. For corrosion avoidance, the water's pH value should be in the neutral range (between 6.5 and 8 pH). Higher pH values will increase the corrosion risk. Also, chloride contents in water higher than 200 mg/l may cause corrosion problems, particularly for stainless steel. Chlorine based cleaning agents and disinfectants, and pure acids and bases should be avoided.

10.3.2.2 Systems Operated with Water Hydraulics

The following facility components will be operated with water hydraulics systems:

- The actuators for rotating the IFS for backflushing
- The fish collector miter gate actuators
- The fish bypass valve actuators

Each of the three sets of components listed above will be served by a dedicated hydraulic power unit. That is, there will be a dedicated HPU for the five hydraulic cylinders in the IFS rotation system (although only two cylinders will be provided in the initial construction contract), a separate HPU for the ten hydraulic cylinders for the fish collector miter gates, and a separate HPU for the five hydraulic cylinders operating the fish bypass valves. The three HPUs will be located in an access gallery to minimize the quantity of hydraulic piping. Electrical/control conduit will be routed to the control room in the tower. The hydraulic control valves will be remotely controlled from the control room, but the control valves will be provided with manual override capability.

10.3.2.3 Water Hydraulic Equipment Design Basis

The design basis for the equipment used in the water hydraulics systems will be the Nessie line of hydraulic components designed specifically for use with tap water, from Danfoss A/S. Maximum system pressure will be 2000 psi.

10.4 FISH PASSAGE CONTROLS

The HHD FPF will utilize a programmable logic controller (PLC) to enable automation of the IFS rotation-for-backflushing sequence. Other operating sequences will be manually initiated, but may be aided by partial automation or simply by alarm functions handled by the PLC. Various instruments such as pressure transducers, position transducers, proximity switches, etc., throughout the facility will provide input signals to the PLC.

The PLC will be a computer based system designed specifically for industrial use. The PLC performs digital logic operations and arithmetic manipulations in the central processing unit. The PLC will have high flexibility since changes to operating instructions and control configurations can be implemented by revising a program.

10.4.1 FPF Refill and Shutdown

Prior to filling the facility with water for the first use, and prior to refilling the facility after a dewatering outage, the stoplogs will be installed in their cofferdam slot, the facility will be dry and most of the facility piping will also be dewatered (although some portions of piping may or may not remain flooded). The facility refill control valve will be manually controlled and the refill rate should be monitored to ensure that it does not exceed 10 cfs, which would violate the NFMS criteria at the cofferdam intake screen. The refill control valve will be a v-port ball valve,

which will provide sufficient cavitation avoidance in addition to having a relatively low head loss, which will be needed to maximize the refill flow rate when the pool level is low. Maximum refill time will be approximately five hours if refilling to a maximum refill pool of 1167 feet. Refill times will be lower when refilling to lower pool elevations. Once refill is complete, the stoplogs will be removed and transported for storage.

After the facility has been fully refilled, the dewatering stoplogs have been removed, and at least one set of submerged miter gates is open, it is possible to begin flowing water through the FPF by operating the radial gate.

Facility shutdown will basically occur in the reverse steps of facility refill. Any flow through the facility must be shut off prior to placing stoplogs. Dewatering stoplogs can only be installed for pool elevations no higher than EL 1167. While the FPF is dewatered, the miter gate of fish collector #1 should be left open and the IFS of fish collector #1 should be left in the horizontal position. This is to provide the maximum possible flow path from the entrance well to the wet well, in case of a flood overtopping the dewatering stoplogs and possibly depositing a large amount of debris at the entrance to the bottom fish collector.

10.4.2 FPF Operation

10.4.2.1 Water Surface Elevation Monitoring

Water levels that will be continuously monitored include the levels upstream of the trashrack (reservoir pool water elevation), downstream of the trashrack (entrance well water elevation), the wet well water elevation, and the fish well water elevation. Water levels and water level differentials will mostly serve display and alarm functions. However, the water level differential from the entrance well to the wet well (IFS differential pressure) will also determine when the PLC calls the IFS rotation system to initiate backflushing. It may also be advisable to allow the PLC to call the miter gate system to open the miter gate of a non-operating submerged fish collector to provide an alternate flow path, if IFS differential pressure exceeds limits and is not resolved by backflushing.

10.4.2.2 Visual Monitoring of IFS chamber

The use of video cameras in the fish collectors will allow the operator to visually monitor sections of the screen and bypass. Visual indications may provoke either more or less frequent IFS backflushing cycles. Additionally, visual monitoring may be the best way of detecting any obstructions locations in the vicinity of the bypass conduit entrance.

10.4.2.3 Switching to a Different Fish Collector

The following sequence would occur when switching to a different fish collector (a lower or higher fish collector) during facility operation:

1. Open the miter gate of the new fish collector.
2. Open the fish bypass valve of the new fish collector.

3. After the miter gate of the new fish collector has reached full open, close the miter gate of the old fish collector.
4. Close the fish bypass valve of the old fish collector.

The timing of when the old fish bypass valve is closed may be one of the operating sequences that are better understood after fish passage operation experience has been gained. It may be found that the valve should be closed just after the miter gate is closed, or it may be desirable to leave some time in between the initiation of the two steps.

10.4.2.4 Changing the Number of Operating Fish Collectors

The sequence for switching from single fish collector operation to dual fish collector operation is similar to the sequence "Switching to a Different Fish Collector", with the following additions:

- The miter gate and fish bypass valve of the old fish collector are left open so that both collectors can operate simultaneously.
- Any AWC flow control changes with the radial gate will be done AFTER all miter gate changes have been completed. For example, if the AWC flow is to be increased when switching from one collector to two collectors, do not increase the flow until both fish collectors are operating and all upstream gate changes have been fully completed.

The sequence for switching from dual fish collector operation to single fish collector operation involves the following sequence:

- Any AWC flow control changes with the radial gate will be done BEFORE making any upstream gate changes (miter gate changes, etc.). For example, if the AWC flow is to be decreased when switching from two collectors to one collector, decrease the flow by lowering the radial gate position before starting to shut off the second collector.
- After the radial gate changes to decrease the AWC flow have been made (if required), then close the miter gate of the second fish collector, and then close the fish bypass valve of that second fish collector.

10.4.2.5 Fish Well Operation

The fish well will have continuous inflow and outflow during FPF operation. The inflow from the bypass conduit ports will be matched by the drain flow to maintain a stable operating water surface elevation. Both the fish well drain valve position and the energy recovery turbine wicket gate position will be manually controlled by the operator. Target flow rates will be between 25 CFS and 70 CFS. It is desired to stay within plus or minus 0.5 CFS of the target flow rate.

If the bypass conduit clogs with debris, then the fish well water level will drop according to the amount of bypass conduit blockage that exists (the bypass flow and drain flow will not change). Alternatively, an abnormally high drain valve opening will indicate that the drain screen

or fish hopper screen is clogged with debris. The extent of the drain valve position deviation from the expected position will determine the degree of screen clogging.

10.4.3 Control Room Monitors

A closed-circuit television system will be needed to be able to visually observe the multiple operating locations of the FPF. CCTV monitors in the control room should provide convenient views of the pool upstream of the trashrack, the entrance well downstream of the trashrack, the wet well, the fish well, the operating areas of the monitoring station, the bottom collector access gallery, and various views of the el. 1181 deck. Additional monitors should provide views of the fish collector camera feeds. The control console should contain at least two monitors for redundancy. Additional monitors may be justified, considering the amount of control inputs that will be monitored throughout the FPF.

10.5 HEATING, VENTILATING, AND AIR CONDITIONING

10.5.1 General

Weather data will be taken from UFC-3-400-02. See Paragraph, Functional and Technical Requirements, below for outside design temperatures.

The mechanical systems proposed for this design include:

a. Fish Passage Facility: Ventilation within the fish passage facility will conform to ASHRAE and ACGIH. Fresh air will be provided to the building occupants at a rate of 0.06 cfm per square foot in accordance with ASHRAE; overall exhaust rate will be 0.5 cfm per square foot in accordance with ASHRAE. For air movement purposes, the structure's area is approximately 10,000 sqft. Constant volume exhaust systems will be provided for areas as required. Electric unit heaters will be used for freeze protection within unoccupied spaces. Where space allows, electric radiant heaters will be used for comfort spot heating. Dehumidification and smoke exhaust systems will be provided as criteria warrants.

b. Maintenance Building: (not summarized here).

c. Admin Building: (not summarized here).

d. Generator: Generator will be provided with a factory furnished enclosure for weather protection; no additional HVAC is required.

10.5.2 Functional and Technical Requirements.

a. Outside design temperatures per UFC-3-400-02.

	Dry bulb (°F)	Wet bulb (°F)
summer (2.5%)	82	65

winter (97.5%)	24	--
cooling degree days	138	
heating degree days	4835	

10.5.3 Design Conditions

The outside design temperatures used are based on UFC-3-400-02. The inside design temperatures are based on TI 800-01.

a. "U" Values (Btuh/sqft F):

Component	ASHRAE 90A Type B bldg	ASHRAE 90.1 Climate Zone 4C Table 5.5-4	TI 800-01Table 11-4A	Actual
Roof insulation/ceiling	0.085	0.081 (R-13)	0.055	0.053 (R-19, or about 2.8" rigid insulation)
Wall insulation	0.37 (Fig 4, over 3 stories)	0.151 (mass, R-5.7) 0.58 (semi heated, no R)	0.088	0.069 (R-14, or about 2" rigid insulation)
Glass	3.10	0.57 (0-10% fenestration)	none	3.10 (R-1.8 in English units)
Doors	none	0.700 0.5 (A7.1.c)	none	1.0 (R-6 in English units)
Poured Concrete walls, 145 lb/cu ft		0.63 (Table A3.1B, includes air film resistances) C-1.33 HC-28.8 Btu/sqft F		
Slab on grade floor	0.270	F-0.73 (unheated, no R)	none	0.190 (=0.03 Btuh/sqft F or R-33)
Exposed floor	0.273	0.107 (mass, non res)	0.273 W/sq meters K use English units	(R-1.5 in English units)
Perimeter insulation	1.6		none	(R-9, or about 2" board)

b. Insulation for the building envelope shall be provided for spaces considered as normally occupied only (Fish Monitoring spaces typical).

Space	Summer Dry bulb (°C)	Summer Dry bulb (°F)	Winter Dry bulb (°C)	Winter Dry bulb (°F)
Tower	30	86	12.8	55
Storage/Mech Rm	30	86	4.4	40

c. Outside Air Requirements: for all spaces, minimum fresh air will satisfy ASHRAE 62.1.

10.5.4 Design Objectives and Provisions

a. Heating and Cooling Systems Selection Basis: The site offered no special warming or cooling benefits. Building orientation was driven by site layout and facility functionality requirements. Energy source is anticipated to be propane, with some electrical resistance heating where practical.

b. Mechanical Ventilation and Exhaust: The HVAC systems and equipment selections will be based on the size and function of the facilities and available utilities. Dehumidification will be provided if required.

c. Standby Heating and Cooling, and Emergency Environmental Systems: The system will feature 100 percent outside air intake for a "flushing" mode only. Emergency smoke removal will be provided.

d. Other Internal Loads: Several rooms may have internal heat sources that contribute to the cooling load of a room. Exhaust fans will be used for cooling. Electrical room will contain motor starters and transformers that will require exhaust and/or mechanical cooling.

e. Vibration/Noise Isolation: Vibration isolation devices and flexible connectors will be utilized in mounting and piping of equipment.

f. Energy Distribution Systems: Central energy plant distribution is not applicable. There are no existing energy distribution systems on the site.

g. Air Filtration Requirements. 30-35 percent efficient pleated media, throwaway filters.

h. Control of Polluting and Toxic Substances: This project will contain insignificant toxic or airborne polluting substances which will not require further study than already noted herein. Hydraulic fluid is anticipated to be bio-degradable.

i. EMCS: Building preparation is not applicable.

j. Energy Conservation: High efficiency motors and compressors will be specified.

10.5.5 Calculations

For calculations see Appendix F, Mechanical Design Calculations.

a. Heating, Air Conditioning and Ventilation Design Load Calculations and U-Value Derivatives: Preliminary heating load calculations will be performed.

b. Life cycle costs will be performed when design decisions cannot be made based on readily apparent operating cost differentials.

c. Air Distribution Design Calculations: To be provided.

d. HVAC Piping Design: hydronic piping, if provided, will be sized on a maximum pressure drop of 0.03 psi per foot, with a maximum velocity of 8 fps.

e. Estimated Annual Unit Energy Consumption: Not applicable.

f. Alternative Energy Systems: No alternative energy systems will be studied.

g. Total Energy/Selective Energy Studies: No studies for total energy systems or alternate selective energy systems are authorized. Fuel selection will be in accordance with project scoping criteria.

10.6 PLUMBING

10.6.1 General

Drainage piping within the fish passage facility will be provided.

10.6.2 Functional and Technical Requirements

10.6.2.1 Fixtures

Fixture Allocation: Fixture requirements within the Fish passage facility are minimal. Fixtures within the tower and indicated on the drawings.

10.6.2.2 Domestic Water

Domestic water will be required for the facility using an on-site well. Water supply for fire protection will not be provided.

10.6.2.3 Drainage

Drainage from each floor elevation within the tower and fish passage structure will be routed via gravity to a sump located below grade at elevation 1029 feet. Potential sources for minor amounts of grease, oil, and other contaminates are present, therefore sump water will be treated by an oil-water separator before being pumped into the large drain pipe that drains the fish well into the AWC. The drainage system will be designed to preclude undesirable pressurization of any parts of the structure that must be accessed by personnel. This may be accomplished by float-activated drains, and/or isolation valves as required.

10.6.2.4 Gas Distribution

Gas Distribution Systems: Compressed air will be provided within the tower for tools. Location and quantity of outlets is to be defined by the user. Compressed air will also be provided for automated screen cleaning.

10.6.3 Calculations

Sizing of Special Gas Distribution Systems: There is a requirement for compressed air. There are no other special gas or liquid distribution systems. No gas burning appliances are provided within the tower. For calculations see Appendix F, Mechanical Design Calculations.

10.7 FIRE PROTECTION, DETECTION AND SMOKE CONTROL SYSTEMS

10.7.1 Fire Protection System Requirements

Located on federal property which is in turn part of unincorporated King County, either UFC-3-600-01 or Title 17 of the King County Code could be used as applicable design criteria for this facility.

Overall, the building encompasses approximately 19,000 square feet of floor area. The King County Code requires protecting facilities with this floor area with a sprinkler system. In addition, the IBC (section 903.2.10.1) requires sprinkler protection for limited access floors exceeding 1500 square feet (gross) floor area. The designers classified this facility as a Business Group B occupancy per the IBC.

Engineering Regulation 1110-1-260 indicates that MIL-HDBK 1008 (superseded by UFC 3-600-01) shall be used for both civil works and military construction projects. In accordance with UFC 3-600-01, buildings of Type I construction exceeding 15,000 ft gross floor area or exceeding three stories in height (measured from the lowest grade, regardless of occupancy) shall be protected with automatic sprinklers. In addition, paragraph 6-25.1 requires sprinkler protection for occupiable underground structures. Sprinkler protection is required throughout the entire building in accordance with UFC 3-600-01, 4-2.3.6.

Following discussions with U.S. Army HQ USACE/CECW-CE, the project is permitted to use the local jurisdiction code in lieu of the UFC for fire protection and life safety. This allows the use of a 1500 square foot sprinkler design area. The fish passage facility is classified as new construction with light and ordinary hazard contents. This facility houses no fuel-fired equipment. Two 24,800 gallon above ground storage tanks will be provided on site for fire protection purposes.

See Section 9.4.4 (Fire Protection and Life Safety) and Plate A-002 for additional construction type and building code and requirements. See Appendix F for analysis of automatic sprinkler system, hydraulic analysis of required water demand, as well as identification of the various occupancies and hazardous areas associated with the facility.

10.7.2 Initiation Devices

An in-duct smoke detector located in the HVAC system return duct and manual pull stations signal occupant notification devices and initiate the stairwell pressurization and gallery smoke exhaust systems. Sprinkler water flow switches (one per floor) as well notify occupants and activate the stairwell pressurization and smoke exhaust systems.

10.7.3 Combined Standpipe and Sprinkler System

A supervised, combined automatic wet-pipe standpipe and sprinkler system provides fire protection throughout the fish passage facility. This includes sprinklers provided throughout all

tower levels, galleries, elevator shaft and stairwell in accordance with NFPA 13. Two 24,800 gallon aboveground water tanks, connected to an electric fire pump located in the tower portion of the eighth floor, provide the water supply for sprinkler and hose stream demands. The fire pump discharge feeds into a 6 inch diameter standpipe running the full length of stairwell. 2 ½ inch hose connections are located on intermediate landings and the roof, in accordance with NFPA 14 requirements. The standpipe and sprinkler feed mains in the stair well will be insulated and protected with heat tape, to protect against freezing temperatures from an exterior door left inadvertently open or the stairwell pressurization system activating. An option to avoiding this additional cost and maintenance is to locate the standpipe in the tower's southwest corner, where is would not be subject to freezing.

10.7.4 Stairwell Pressurization System and Gallery Smoke Exhaust Systems

The presence of fire or smoke in the fish passage facility as detected by a smoke detector, manual pull station, or manual activation at the Fire Alarm Control Panel (FACP) initiates the dedicated stairwell pressurization and gallery smoke exhaust systems - providing tenable conditions for safe occupant egress. Sprinkler head activation initiates smoke exhaust in the tower, in addition to the gallery smoke exhaust system.

Smoke Exhaust Mode (Occupant Egress Mode):

Upon activation of an alarm due to a signal sent by a smoke detector, manual pull station or manual initiation at the FACP:

1. HVAC supply and return fans at AHU-1 shut down; all other exhaust fans energize or remain on.

2. All HVAC supply and return fire/smoke dampers return to their normal (closed) position.

3. Stairwell pressurization SF-2 and gallery exhaust fan EF-3 energize.

Fire Sprinkler Mode:

A signal from the waterflow switch on a specific floor (due to fire or products of combustion activating a sprinkler head) starts the following sequence of events:

1. All HVAC supply air fire/smoke dampers remain open except those on the fire floor which shall close.

2. HVAC supply fan at AHU-1 remains on; HVAC return fan shuts down and all other exhaust fans remain on.

3. AHU-1 switches to 100 percent outside air.

4. All HVAC return air fire/smoke dampers close except those located on fire floor.

5. Bypass damper at Elev 1141 opens, allowing return air to reroute to gallery exhaust fan EF-3.

6. Stairwell pressurization SF-2 and gallery exhaust fan EF-3 energize.

Smoke Exhaust & Fire Sprinkler Mode:

Should a waterflow switch activate after smoke detector, pull station or fire dept. activation, the following sequence of events occurs after steps 1-3 in the first sequence (Smoke Exhaust Mode) above:

4. HVAC supply fan starts and switches to 100 percent (tempered) outside air. HVAC return fan remains shut down.

5. All HVAC supply air fire/smoke dampers open except those located on fire floor. All HVAC return air fire/smoke dampers remain closed.

6. Bypass damper at Elev 1141 opens, routing return air to gallery exhaust fan EF-3.

7. HVAC return air dampers on the fire floor open.

10.8 OTHER EQUIPMENT

10.8.1 Elevator

A pre-engineered traction elevator will be provided in the tower. The elevator is anticipated to have thirteen stops. An elevator machinery room will be located above the shaft. Shaft size is 9 feet, 8 inches by 8 feet, 1 inch based on commercial data. Elevator capacity is 4,000 pounds.

10.8.2 Miscellaneous

a. Seismic Design: Nearby Tacoma is located in a Seismic Zone 3. The elevator and all mechanical equipment and piping will be provided with anti-sway and support devices in accordance with UFC 3-310-03A and Corps of Engineers Guide Specification 15070.

b. Description of Features/Systems for Enhancement of Maintenance and Operation: All mechanical equipment will be provided with manufacturer's recommended clear space for maintenance. Where possible, major equipment will be floor mounted. Housekeeping pads will be provided for all floor-mounted equipment.

c. Economy of Construction/Procurement, Operation and Maintenance: Mechanical equipment used on this project will be sized and selected based on regularly catalogued items available from several manufacturers wherever possible. Conventional, readily available commercial equipment will be specified unless specific design criteria dictate specialized components.

d. Handicapped Accessibility/Features: An elevator will be provided in the tower; no other mechanical equipment with accessible features is included.

e. Special Protective Requirements or Security Measures: No special security measures have been included that affect the mechanical design. Mechanical equipment will be provided with noise and vibration isolation. Moving equipment will be provided with protective shields.

f. Special Processes and Specialty Equipment Requirements: Not applicable, except as detailed elsewhere.

CHAPTER 11 ELECTRICAL DESIGN

11.1 DESIGN CRITERIA

The following documents, in addition to specific project design instructions, are used as electrical design criteria for the Additional Water Storage Project (AWS) at Howard Hanson Dam (HHD).

- NFPA 101, Life Safety Code
- NFPA 780, Lightning Protection Code
- NFPA 72, National Fire Alarm Code
- NFPA 70, National Electrical Code
- IES Lighting Handbook
- ANSI C2, National Electrical Safety Code
- U. S. Army Corps of Engineers Technical Instructions, TI 800-01, Design Criteria
- U. S. Army Corps of Engineers Technical Instructions, TI 810-90, Elevator Systems
- TM 5-811-1, Electrical Power Supply and Distribution
- TM 5-811-3, Electrical Design Lightning and Static Electricity Protection
- UFC 3-310-03A, Unified Facilities Criteria, Seismic Design for Buildings
- UFC 3-400-01, Unified Facilities Criteria, Energy Conservation
- UFC 3-520-01, Unified Facilities Criteria, Interior Electrical Systems
- UFC 3-600-01, Unified Facilities Criteria, Design: Fire Protection Engineering for Facilities
- EM 1110-2-2610 Lock and Dam Gate Operating and Control Systems
- EM 1110-2-2704 Cathodic Protection Systems for Civil Works Structures
- ER 1110-2-1150 Engineering and Design for Civil Works Projects
- ER 1110-1-260 Fire Protection Engineering Policy
- ER 1110-345-700 Design Analysis, Drawings and Specifications
- ETL 1110-2-553 Control Stations and Control Systems for Navigation Locks and Dams
- Draft Feasibility Report & EIS Appendix A, Design

11.2 ELECTRICAL DISTRIBUTION SYSTEM

11.2.1 Existing Conditions

Electrical power to Howard Hanson Dam is provided by Puget Sound Energy (PSE), the local utility company, by an overhead power line that is owned partly by PSE and partly by the government. The overhead line makes a 6-mile run from the PSE substation in Cumberland through a rural environment to Howard Hanson Dam. The PSE metering terminal is located at the 2-mile point on the line and the remaining 4 miles of overhead line belongs to the U.S. Army Corps of Engineers. The government's existing line is along a logging road and crosses over the road multiple times; it also makes one crossing of the Green River.

The existing overhead system supplies power to three single phase 25kVA transformers located at the current administration building. At the transformers, the primary is stepped down to 208Y/120 volts, 3-phase and the secondary conductors are routed underground into the administration building. From the Main Distribution Panel in the building, power is routed underground throughout the site to serve the existing facilities. Also in the building is an existing 60kW generator that provides back-up power for the entire project when there is a power outage.

The new fish passage facility requires a separate tower with new equipment. This tower will require power for monitoring, control, lights, mechanical equipment, and large motors. A monitoring station will be provided at the new tower for necessary assessment of the condition of fish as they travel through the fish passage facility. To support these new functions, a new Administration Building is to be constructed and the existing Maintenance building is to be expanded. These changes at Howard Hanson Dam will increase the electrical load so that it exceeds the capacity of the existing system. Therefore, the electrical service to HHD must be increased. Due to the age of the existing equipment, the limited capacity of the existing overhead distribution line, and to insure reliable service to the project site, the power distribution system at Howard Hanson Dam must be upgraded. The upgrade of the existing overhead distribution system is to be done under a separate contract prior to the construction of the Fish Passage Facility.

11.2.2 Proposed New Distribution System

Puget Sound Energy's substation in Cumberland is the point of origin for the primary feeder to Howard Hanson Dam. This feeder serves several other customers besides HHD, including Tacoma Public Utilities (Tacoma Water). PSE has already completed an upgrade to the line coming from the Cumberland substation to accommodate Tacoma Water's new water treatment plant. To obtain sufficient and reliable power to supply the increased load due to the fish passage facility at Howard Hanson Dam, the government-owned portion of the existing overhead line will be replaced. Coordination with PSE will be required to determine if upgrades are required at the Cumberland substation as a result of the added Fish Passage Loads.

Under a separate contract and prior to the construction of the Fish Passage Facility, the government-owned portion of the overhead distribution system will be upgraded with new poles

and conductors. The size of the overhead conductors will be increased to insure that they will be able to support the ampacity requirements of the existing and new facilities. As part of the power line contract, a 4-way sectionalizer will be installed. The sectionalizer is provided to maintain the existing power distribution system and to allow the installation of medium voltage conductors (primary feeders) for the new fish passage facility and the new Administration Building and Maintenance Building expansion.

Currently, conductors to the existing tower and spillway are routed underground in a duct bank from the existing administration building. To reach the tower, the conduits are routed on the side of the existing bridge. A previous project expanded the underground ductbank in preparation for the Fish Passage project. The new primary feeders to the new Fish Passage tower will be routed through this ductbank, and then in conduit suspended from the side of the current bridge and the new bridge section that connects to the new tower. The conduit will be supported in a manner similar to the existing installation. The conduit will be routed directly into the Electrical Room at Elevation 1228 and to the unit substation at EL 1245 to provide power within the tower.

11.2.3 Load Analysis

Based on the preliminary load information for the new tower, the estimated connected load for the entire project is approximately 650 KVA. This includes the new tower and monitoring station loads, the existing project loads, the new Administration Building and Maintenance Building addition, and 10% growth. Detailed calculations are included in Appendix J.

11.3 SUPPORT FACILITIES

11.3.1 Existing Tower

There will be no major changes to the equipment in the existing tower. An additional circuit will be provided from the existing system for the new dogging device required for the emergency gate. Service to the existing tower comes from the main panel in the existing Admin Bldg and will remain there until the new Admin Bldg is constructed.

11.3.2 Administration Building

- **11.3.2.1 Existing Administration Building**

The existing administration building is not adequate for the current operational needs of Operations Division personnel nor can it support the new Fish Passage project. Due to the age and configuration of the existing administration building, a new building will be provided on the left bank of the site. Since the existing service for the existing project is backed up by the existing generator in the existing Admin Bldg, there will be no modifications to the generator or

the building until the new Admin Bldg and tower are completed... For additional information about the generator refer to paragraph 11.4.6 in this section.

11.3.2.2 New Administration Building

The new Administration Building is planned for the left bank. A new primary feeder will be routed to a transformer sized to support the new Administration Building and the Maintenance Building. This new building will provide sufficient space for the operational needs of the existing project and the added requirements of the Fish Passage Facility.

11.3.3 Maintenance Building

Additional space will be added to the existing maintenance building to create space for maintenance functions supporting the new fish passage facility

11.4 FISH PASSAGE FACILITY

11.4.1 Interior Electrical Distribution

There will be a separate electrical room in the Fish Passage Facility located at the top of the tower.. A 300-kVA unit substation will be located at El 1245 and it will serve as the service entrance for power into the tower. The 12470-volt primary will be converted to 480Y/277 volts, 3-phase to supply hydraulic power units, the fish monitoring station, the elevator, and other loads as necessary. Step down transformers will be used to obtain 208Y/120 volts, 3-phase for circuits to supply convenience receptacles and low voltage control circuits as required by the hydraulic system, sensors and monitoring devices used in data collection and reporting. All electrical enclosures will be rated NEMA 4 and surface mounted on brackets away from the tower walls.

11.4.2 Lighting

Illumination levels shall be in accordance with the IES Handbook and the Technical Instructions 800-11. Fixtures in all areas except the Electrical/Control Room and Mechanical Room shall be rated for use in wet/damp locations. Control Room fixtures will be appropriate for use in office areas with computers. All fixtures shall use energy efficient fluorescent lamps with electronic ballasts. Wall mounted switches will be used to control the lights at each collector level. The stairways shall be provided with three-way switching located at the appropriate entry areas. Normal lighting circuits will be 277-volt.

Illumination in the fish collectors is provided to allow visibility in the collector to see the IFS and possible fish passage through the collector.

Exterior lighting will be provided at the stop log storage area, along the existing bridge, and on the top of the new tower. Stop log lights shall be on poles that are mounted on the top of the retaining wall. Wall mounted flood lights will be mounted to the sidewalls of the existing bridge and to the top of the tower. Lights on the tower will be above El 1228.

11.4.3 Wiring Methods

Conduit shall be surface mounted. All interior wiring shall be copper. Due to the height of the tower, and where the conductor lengths will exceed 100 feet; the minimum size for the interior conductors will be #10 AWG in ¾-inch conduit. All conductors shall be supported in accordance with NEC 300.9. All circuit runs will include separate equipment grounding conductors and there will be no shared neutrals for all receptacle and control circuits. Voltage drop for the tower will be designed for a maximum of 1 percent for conductors to panelboards and 2 percent to the branch circuits. Conductors required to supply exterior electrical systems shall be sized to serve the load and install in pvc duct that are concrete encased.

11.4.4 Controls

Coordination between the Electrical and Mechanical systems will be required to develop the operational control system to meet the objectives of the Fish Passage Facility. Some of the functions associated with the operation of the Fish Passage Facility will be automated depending on the operational sequence and the location of the devices within the tower, while other functions will be manually controlled. A programmable logic controller will be used to receive signals from the various devices throughout the tower and transmit signals to devices required for the automatic operation of the fish passage facility. The controller will have a computer and graphical user interface located in the Control Room of the tower. Although the main point of operation for the system will be from the Control Room, some functions associated with the fish monitoring and transport operations will be done at the location of the Fish Monitoring Station. Manual override control will be provided for all automated controls. Provisions will be made to allow Operations Division staff to monitor the fish passage facility from the new Administration Building. Automation of the gates in the existing tower is not included as part of this project.

Cameras shall be located in each collector. The images will be transmitted to a display in the Control Room.

11.4.5 Communications

Telephones for the areas within the tower, and the Monitoring Station will be added to the existing site telephone system at Howard Hanson Dam. The existing telephone system will be upgraded and relocated to the new Administration Building.

11.4.6 Generator

A new diesel generator will be provided for the Administration and Maintenance Buildings on the left side of the bank. The generator will have an automatic transfer switch capable of switching all power from the utility line to the generator in case of any power outages. This generator does not replace the existing 60KW generator. Therefore, the existing project functions and the new Admin functions do have a power source if there is a power outage.

With the addition of the hydro-turbine for power to support the fish passage functions, the need for a separate diesel generator for the tower is still being investigated. When the hydro-turbine is in operation it is capable of supporting the entire fish passage tower's electrical loads. Therefore the tower would not be affected by any utility power outages.

11.4.7 Fish Monitoring and Transport Station

The station will be located in the new tower. Power for monitoring functions and fish transport functions will be provided by panelboards installed at the monitoring station. The unit substation located in the main electrical room will supply these panelboards. Preliminary loads for the monitoring station show that it will include interior lights, an air compressor, and space heaters. Refer to Chapter 12 for more details relating to these functions.

CHAPTER 12 MONITORING STATION DESIGN

The monitoring station will be located on elevated concrete and steel platforms located at the 1196 ft and 1194 ft elevations, north of the Tower. An additional platform will be installed over the fish well for hoisting equipment to lift and lower a fish collection hopper (referred to as the lift hopper) into and out of the fish well. This hoist platform will be constructed of concrete and located at the 1228 ft elevation. When operating, the lift hopper will be docked to the monitoring station flumes at the 1207 ft elevation to release fish. At this level an additional steel platform will be installed surrounding the fish well to allow operator access to docking operations. All of the platforms will be covered with a metal roof system.

When in operation, the monitoring station will be supplied with fish via a lift hopper which will be lifted in and out of the fish well. The lift hopper will have similar dimensions to the fish well and will transport fish from the fish well to a transfer flume system. The flume system will transport the fish to a series of holding tanks for monitoring or to release tanks for truck transfer.

The lift hopper will travel up and down the fish well via a hoist system, and will be composed of a stainless steel frame, a fixed water holding hopper and a screened bottom that opens. Brushes will be attached around the perimeter and will aid in reducing gaps between the hopper and walls of the fish well as the lift hopper moves up and down. Cables will be provided from the hoisting equipment to both lift and lower the system and to open and close the bottom.

The lift hopper will dock onto and release fish into a flume system which will distribute them to holding tanks (where they can be monitored), or to truck transfer holding tanks (where they will await transfer downstream).

After the hopper is docked, the operator will select which tank the fish will be routed to. The controls will position diverter gates in the flumes to direct the fish to this tank and start the flume wetting water supply system. If the fish are to be routed to a holding tank, they will first be directed to a fish grader, where the fish will be separated according to size. At the grader the larger fish will slide over parallel bars and into an upper flume that will direct them to holding Tank 1, and the smaller fish will fall between the bars into a lower flume and be directed to the selected holding tank (either Tank 2, 3, 4, or 5) by diverter gates. At the holding tanks the fish can be sorted by size again by installing another grader at the outlet of the flume. If this grader is used, a screen would be placed in the center of the holding tank separating it into two segments and the smaller fish would fall between the grader bars into the upstream end while the larger ones would slide along the bars and be directed to the downstream end.

If the fish are to be routed to the one of the truck transfer holding tanks, a bypass diverter gate will divert them prior to the fish grader and route them to the truck transfer area where additional diverter gates will direct them to the selected tank.

Once in the holding tanks, the fish can either be held for observation and then released to the truck transfer tanks or routed into the tower workup area for data collection. These operations

will require different transfer operations. To transfer the fish from the holding tanks to the truck transfer tanks, the operator will select which truck transfer tank the fish are to be routed to. This will position the diverter gates and initiate the flume wetting water system. At this point the operator could partially drain the tank prior to release or directly initiate the transfer operation by actuating the quick opening (pneumatically operated) outlet gate. Once this gate opens, fish and water will spill out of the holding tank and be routed to the selected truck transfer tank.

To route fish from a holding tank to the indoor workup area, the operator will start the wetting water system and open a manual stop gate to transfer fish into a flume that connects to the workup area. Fish crowders will be used to crowd fish to the outlet end of the holding tanks and lift them up to the transfer flume.

Inside the tower workup area the fish will be directed to the holding area of the anesthetic/holding tank. From this holding area, small batches of fish will be crowded to the anesthetic chamber, and a divider plate will be placed between the holding and anesthetic sections. Fish will then be anesthetized and transferred to a bucket. The bucket will be carried to a workup table and the fish released into small holding areas in the middle of the table. Both fresh water supply and anesthesia water will be supplied to the table to allow the operator flexibility when processing the fish. The workup table will be designed with flat work areas on either side, so that up to six people can be working at the same time. Once the fish have been processed, they will be placed in overhead transfer piping that will route them to one of two indoor recovery tanks. The fish will be allowed to recover in these tanks and then be transferred to one of the outdoor recovery tanks.

To transfer the fish from the indoor recovery tanks to the outdoor recovery tanks, the fish will be routed through flumes to the selected outdoor recovery tank. To initiate this operation, the operator will select the outdoor recovery tank that the fish are to be routed to and the controls will position the diverter gates and start the wetting water system. The operator will then open a manual release gate at the recovery tank to transfer the fish.

The outdoor recovery tanks will be located on the upstream end of the truck transfer tanks, and be separated from each other and from the transfer area by screens and stoplogs. Once fish have recovered in these tank areas the screens and stoplogs will be removed and the fish will be manually crowded into the truck transfer holding area. For emergency purposes, the recovery areas can also be used for additional holding by removing the screens and stoplogs between the recovery areas. Sensors will be installed on the screen guides that separate these (recovery) areas and the control system will only allow transfer (for holding purposes) to these areas if the screens have been removed.

To transfer fish off site, a transfer truck will be docked to the truck transfer station with an empty tank. This station will be composed of outlet flumes from the truck transfer tanks (Tanks 6 and 7) that feed an open-topped oversized pipe that is oriented vertically. On the bottom of this pipe is a flexible skirt with a flange on the bottom. When docked this skirt will be pulled down, mated with the flange on the truck tank and locked in place. Water will then be introduced into the top of the oversized pipe and this will fill the truck tank and back water into the flumes to transfer tanks at the monitoring station. When water has backed up all the way to the outlet end

of the transfer tanks, the outlet gate will be opened to release the fish. A drain valve (with a screened opening) at the truck tank will then be opened and water will be drained trough the truck tank, transferring the fish and water from the transfer holding tanks at the monitoring station to the truck tank.

12.1 COMPONENT AND SYSTEM DESIGN

12.1.1 Lift Hopper

The Lift Hopper will be constructed of stainless steel and will be used to transfer fish from the fish well to the monitoring station flume system. The outside dimensions will be designed to closely fit the dimensions of the fish well and when raised an lowered in and out of the fish well guide wheels will roll along the fish well walls to center ceter and guide it. Stiff bristle brushes, mounted along the perimeter of the structure will exclude fish from escaping between the space that exists between the exterior of the hopper assembly and the fish well walls when moved through the fish well water collumn.

The lift hopper will have a fixed tank section that has approximately 142 cubic feet of usable holding volume one side and a perforated bottom that opens and closes on the other side. When the bottom is closed it will be sloped such that any fish above the bottom will be directed into the tank section.

The hopper hoist system will have (2) lifting cables that extend from a lifting drum to the tank end of the assembly and (2) bottom closure cables that extend from another drum and attach on the opposite side to the hopper bottom to open and close it.

When the lift hopper is lowered into the fish well, the bottom will be in the open position to allow fish in the fish well water column to pass through. When it reaches the bottom of the fish well, the hopper bottom will be closed. This closing action will help clean the fish well drain screens by sweeping a brush that is mounted on the edge of the hopper bottom along the screen surface.

When the hopper is raised, the bottom will be closed. Any fish located in the water column above the hopper will be captured and directed into the hopper tank, while water will be allowed to flow through the perforations in the bottom. The perforated bottom area is sized with adequate area to keep fish from being impinged on the screen when the hopper is being raised at 4.5 feet per minute and there is up to 70 cfs of downward flow in the fish well. The velocity approaching the screen will be 0.4 feet per second or less under the above stated flow conditions.

12.1.2 Lift Hopper Docking Station

During hopper transfer operations, three pneumatically actuated cylinders will be used to dock or push a 12 inch flange from the flume system onto the lift hopper outlet. To do this, two operators (one on either side of the docking station) will need to push and hold actuator buttons to move the cylinders. The docking station will also include an automated water control weir gate

that will be used to pool water at the hopper discharge point prior to fish release and then meter the fish and water out slowly by dropping the gate. The weir gate will have a ramp on the downstream side so that fish will not fall into the flume below as they go over the top. The structure will be constructed with stainless steel.

12.1.3 Holding Tanks

Holding tanks will be constructed from stainless steel and have a water holding capacity of 143 cu ft. The tanks will have fast acting pneumatic outlet gates for fish release to the truck transfer tanks and a smaller manual gate that will allow the fish to be transferred to the workup area inside the tower. The tanks will have two screened 8 inch outlet pipes that will be piped to take drain water to an off station water control structure (Water Control Box 1). Level will be maintained for all of the holding tanks at this structure. The screen area for the overflow drains will be designed to have an approach velocity of less than 0.4 fps at maximum flow input (when fish are being transferred from the lift hopper to the tanks) to keep from impinging fish on the screens.

12.1.4 Truck Transfer Tanks

Truck transfer tanks will be constructed of stainless steel. These tanks will be designed to have two 50 cu ft recovery holding areas on the upstream side and a 143 cu ft truck transfer holding area downstream. The tanks will have electrically actuated outlet gates that will transfer fish to the truck transfer station. The tanks will have two screened 16 inch outlet pipes that will be piped to take drain water to an off station water control structure (Water Control Box 2). Level will be maintained for both truck transfer tanks at this structure. The screen area for the overflow drains will be designed to have an approach velocity of less than 0.4 fps at maximum flow input (when fish are being transferred from the holding tanks to the truck transfer tanks) to keep from impinging fish on the screens.

12.1.5 Transfer Flumes

Transfer flumes will be constructed from stainless steel. The main transfer and bypass flumes to and from the holding and truck transfer tanks will be 12 inches in width and range from 18 inches to 24 inches in height. The transfer flumes into and out of the tower workup area will be 8 inches in width and 18 inches in height. Removable flume sections will be installed on the exterior side of the tower to allow removal and placement of a block off plate to prevent water from entering the tower during flooding conditions. All flumes will be sloped with a minimum slope of 1.5%.

12.1.6 Diverter Gates

There will be a total of nine 12-inch diverter gates in the flume system. One of the gates will allow the fish from the lift hopper to be directed to either the bypass flume (where they will be sent directly to the truck release tanks) or to the holding tanks. When the fish are directed to the holding tanks, three of the gates will be positioned to route fish to the specific tank selected. The other gates will direct fish to a selected outdoor recovery or truck transfer tank.

All of these gates will be pneumatically actuated using cylinder-type actuators. The actuation system will be designed with speed control to allow adjustment of opening and closing speeds. All diverter gates will be constructed from stainless steel.

12.1.7 Water Control Structures

Two water control structures will be installed to control the operating water levels in the holding and truck transfer tanks. Water Control Box 1 will control the operating water levels in all of the holding tanks (Tanks 1-5) and Water Control Box 2 will control the operating water level in both of the truck transfer tanks (Tanks 6 and 7). Drain water will be plumed to these tanks and upwell into a pool area that overflows stoplogs into a drain area. The stoplog crest in these tanks will set the operating water level in the holding and truck transfer tanks and will be designed to have adequate weir length to allow minimal water buildup even under maximum flow conditions. The control structures will be constructed from stainless steel and will utilize commercially built fiberglass stoplogs.

12.1.8 Indoor Fish Processing Tanks and Equipment

The indoor fish processing equipment and tanks will include the anesthetic/ holding tank, the workup table, two indoor recovery tanks and the anesthetic circulation tank. These components will all be constructed of stainless steel and will be used for measurement and enumeration of the fish as described earlier. The anesthetic circulation tank will be used as a circulation sump to receive anesthetic drain water from the workup table and the anesthetic holding tank and provide a pumped supply of this water to these same components.

12.1.9 Fish Counting Provisions

Fish counting locations, for future equipment installation, were included as part of the design. Due to the quantity and rate that the fish will be transferred during unloading operations, there does not appear to be equipment currently available for this application. The current flume design includes areas for future counters downstream of the fish grader on both the “small and large fish” flumes should rapid counting technology become available. Provisions for an additional counter will be provided on the bypass flume. These counters, if installed, would allow all of the fish that passed through the facility to be counted.

12.1.10 Life Support Water Supply System

The life support water supply will be provided by a pumping system that was sized and designed by the USACE. This system will have duplex pumps to provide a backup water supply for this system if there are problems with the operating pump. This pumping system will draw water from reservoir water that is being routed through the dam facility. The flow rates required to sustain the fish in the various tanks were determined through biological calculations. The total flow to the facility estimated by the bio-programming was approximately 460gpm, but the supply system will actually be designed to provide up to 500 gpm. A summary of the target flows to each tank is provided below:

Holding Tank 1:	60 gpm
Holding Tank 2:	60 gpm
Holding Tank 3:	60 gpm
Holding Tank 4:	60 gpm
Holding Tank 5:	60 gpm
Truck Transfer Tank 6:	60 gpm
Truck Transfer Tank 6:	60 gpm
Outdoor Recovery Tank 6A:	14 gpm
Outdoor Recovery Tank 6B:	14 gpm
Outdoor Recovery Tank 7A:	14 gpm
Outdoor Recovery Tank 7B:	14 gpm
Indoor Recovery Tank 1:	7 gpm
Indoor Recovery Tank 2:	7 gpm
Anesthesia Holding Tank:	5 gpm
Workup Table Fresh Water:	5 gpm
Total:	500 gpm

In addition to the water requirements indicated above, there will be some low capacity intermittent fill valves inside the tower workup area. When these valves are opened, the demand will rise slightly above the 500 gpm available. It was assumed that for these intermittent conditions it would be allowable for the overall supply pressure to drop slightly. This may slightly decrease flow to the various tanks in use for a short time, but since the system has been designed with some excess capacity, this was determined to be acceptable.

To maintain an approximately constant supply pressure in the distribution system, the design incorporated a back pressure maintaining valve. This valve will maintain a constant supply pressure in the system, and discharge any excess water to the drain system if the demand is less than 500 gpm.

The design also incorporated another back pressure maintaining valve to provide life support flow to the truck transfer station if it is available. If, for instance, two of the holding tanks were not in use, the total system demand would be 380 gpm. During normal operation, the excess flow (160 gpm) would be wasted to the drain system through the system relief valve. If, however, the operator wanted to use this excess water to fill the transfer truck tank, he or she could open a supply valve at the truck transfer station to use this water. Once this supply valve was opened, the second back pressure maintaining valve would become operational and allow only enough water through the valve to maintain the upstream set pressure. Note that during truck fill operations there will likely be a slight drop in system pressure and this will likely cause a slight loss in flow to the other operating components. However, because this will be an intermittent operation and the system was designed to provide some excess capacity, this was assumed to be acceptable.

12.1.11 Flume Wetting Water Supply System

The flume water supply system is designed to provide water to the flume transfer system to wet the flumes prior to release of fish, convey the fish to the various tanks, and to maintain a flow in the flumes after the release procedure has finished to flush the fish out of the flumes. The required flow to the flumes was established to provide flume wetting water flows sufficient to provide a flow velocity greater than 5 fps and a flume depth of greater than 2 inches.

The monitoring facility has up to 500 gpm of life support water available to keep the fish alive while in the tanks, but there is not adequate fresh water available to satisfy the flume transfer water requirements. To satisfy these requirements, a system was developed that allowed reuse of drain water to provide the necessary flows. An underground pump vault will be used for this system. When a transfer operation is not in progress (i.e. flume wetting water is not needed) drain water from the facility enters this vault, overflows a standpipe, and is then routed out of the facility to the wet well. During transfer operations, high capacity pumps inside the vaults are operated to supply the needed water for these operations. When these pumps are operated, water is pumped out of the vault to the flumes, which causes the water level inside the vault to drop because the water entering the vault from the facility drains is initially less than the water being pumped out. After the flume supply has been operating for a while, the drain water from the facility will increase (because the supply to the facility has been increased by the amount of flow being pumped into the flumes) and the water level in the vault will stabilize at a lower level and begin to rise (because life support water is still being introduced).

Once a transfer operation has been initiated, either one or both of the flume supply pumps will be started (depending upon the operation), and automated water supply valves will be opened to supply the flumes with wetting water. The transfer operation selected will dictate which water supply valves are opened, and balancing valves located downstream of the automated valves will set the flow required to the various water supply outlets. The system supply pressure will remain more or less constant for all transfer operations, even though each operation requires a different flow, by using a back pressure maintaining valve. This valve will keep the system pressure upstream of the valve constant while wasting any excess water back to the pump vault..

The flume water supply system supplies the following operations:

Transfer from the Lift Hopper to the Truck Transfer Tanks (Tanks 6 or 7):

For this operation, the hopper will be docked to the flume system and the wetting water system will be initiated. This will start both flume supply pumps and open a supply valve to the flume system upstream of the water control weir gate, downstream of the docking station. A wetting flow of 1.5 cfs will fill a small pool area upstream of the gate and then overflow to provide wetting water to the flume, through the bypass diverter gate, all the way down to the selected truck transfer tank. After the gate from the lift hopper is opened to release the fish, the weir gate will be slowly lowered to meter fish and water out of the lift hopper and into the flume system and to the truck transfer tanks.

Transfer from the Lift Hopper to the Holding Tanks (Tanks 1-5):

For this operation, the hopper will be docked to the flume system and the wetting water system will be initiated. This will start both flume supply pumps and open supply valves to three locations at the flumes. At the first point, 1.5 cfs will enter upstream of the water control gate, but downstream of the docking station. Water will fill a small pool area and then overflow to provide wetting water to the flume supplying the fish grader. At the fish grader larger fish will slide along parallel bars and be directed to an upper flume which will transfer them to Tank 1 while the smaller fish drop through the openings between the grader bars and enter a lower flume which will transfer them to the selected holding tank (Tank 2, 3, 4 or 5). An additional 1.3 cfs will be introduced at the upper flume to allow transfer operations to Tank 1 and another 0.3 cfs will be provided to the lower flume to allow transfer operations to the other tanks. As with the first transfer operation described, after the gate from the lift hopper is opened to release the fish, the weir gate will slowly be lowered to meter fish and water out of the lift hopper and into the flume system.

Lift Hopper Fill:

After a transfer operation from the lift hopper (as described above), the lift hopper will need to be filled before it is lowered to keep it from floating when it enters the water. This operation will be a continuation of the transfer operations that have just occurred. For these operations, both flume supply pumps will continue to operate and the flume water supply valves that were open during the previous transfer operations will remain open while the hopper is being filled to flush any straggling fish down the flume system. When the hopper fill operation is initiated, a water supply valve feeding flume supply water to the hopper fill pipe will open and 1.5 cfs will be delivered into the hopper to fill it. A level sensor will stop flow when the hopper is full and indicate to the controls that the lift hopper can be lowered. After a time delay the water supply valves to the flumes will be closed and the pumps will shut down.

Transfer from a Holding Tank (Tank 1, 2, 3, 4 or 5) to Truck Transfer Tanks (Tank 6 or 7):

For this operation, wetting water is needed in the main transfer flume prior to fish release. One flume supply pump will be started and an automated supply valve will be opened to provide water to the outlet of Water Control Box 1. This water (1.5 cfs) will flow from the box into the main transfer flume. After the wetting water has been started, fish will be released from the

selected holding tank by opening the lower outlet gate. After all fish and water have left the tank, the flume supply valve will remain open and the pump will remain operating for a period of time to flush any fish in the flume down to the truck transfer tanks.

Transfer from a Holding Tank (Tank 1, 2, 3, 4 or 5) to Indoor Workup Area:

When fish are to be sampled, they will be routed from one of the holding tanks to the workup area inside the tower. To do this, fish will be crowded to the discharge end of the selected holding tank and a manual gate (that feeds the indoor transfer flume system) will be opened to release fish into the flume. This flume will route the fish from the holding tank to an anesthesia tank inside the tower. To do this operation, the operator will initiate a timer that will start one of the flume supply pumps. He or she will then open a manual valve to supply up to 0.8 cfs to wet the transfer flume to the indoor tanks.

Transfer from the Indoor Recovery Tank to Truck Transfer or Outdoor Recovery Tanks:

After fish have been sampled, they will be placed in a recovery tank inside the tower workup area and then transferred to one of the outdoor recovery tanks on the upstream end of the truck transfer tanks (Tank Section 6A, 6B, 7A or 7B). During this operation the fish will travel through a short flume section and will then be directed into the main transfer flume where they will be conveyed to the selected truck transfer tank. Wetting water will be supplied from one flume supply pump to a manual valve feeding 0.4 cfs of wetting water to the recovery flume, and 1.5 cfs through an automated valve to the main transfer flume at Water Control Box 1.

Truck Fill/ Transfer Operations:

For this operation the operator has the option of using flume supply water or life support water to do the truck fill and transfer operations. When the flume supply water is selected, one flume supply pump will be operated and 1.5 cfs of truck transfer water will be supplied to the transfer station. When life support water is used, the water supply system will allow any life support water that is not being used for rearing operations to be used to supply the transfer station.

12.1.12 Utility Water Supply System

The monitoring facility will have a utility water supply system that will feed wash down hydrants throughout the facility. To conserve water this system will use water from the same pump vault as the flume supply water system. Two pumps (one will be backup to the other) will be installed in this vault to supply this system. This system will be an on demand system, controlled by a hydro-pneumatic tank and will be capable of supplying up to 75 gpm at 30 psi to any combination of wash down hydrants on the facility. The hydrant supply system will also be designed such that the hydrants can be supplied with life support water, should the pump vault be out of operation (such as during the off season).

12.1.13 Monitoring Station Drain System

The drain system for the holding and truck transfer tanks at the Howard Hanson Monitoring Facility was designed to drain any water routed through the tanks, including life support water, and water surges that result from transfer operations to an underground pump vault. From the underground pump vault, this water will either be used again to support flume supply operations or the utility water hydrants. Any water not used by these systems will overflow a standpipe in the vault and be routed to the wet well. There are a number of different components to this drain system as described below:

Holding Tank Drains

A constant supply of life support flow (60 gpm) is piped to each holding tank. In addition, when fish are transferred from the lift hopper to the holding tanks there will be flume wetting water and a surge of flow from the hopper release operations that will enter Tank 1 and one of the other tanks. Each holding tank will have two screened 8 inch drain pipes at the downstream end and these will be connected and routed to drain piping that will convey the water to Water Control Box 1.

Because of space constraints, it was not possible to provide enough weir area at each tank to provide level control individually under surging conditions, therefore the level control for all tanks will be controlled centrally at Water Control Box 1, by weir overflow. To minimize head loss to Water Control Box 1, the drain piping from the holding tanks was split into two separate pipes, and oversized. At the control box, the drain water upwells into water control chambers, overflows a set of stoplogs and can then be directed into the main transfer flume and routed to either Truck Transfer Tank 6 or 7.

During normal operation, 60 gpm will be entering and leaving each tank and this will be collected and conveyed by the two drain pipes to the water control box. At the control box the water will overflow weirs that set the operating level and drop into a flume that will be directed to the truck transfer tanks.

During fish hopper transfer operations, life support water will continue to enter each tank but additional water from the fish transfer operation will also enter two of the tanks. During this operation, the fish will be directed from the lift hopper to a fish grader. At the fish grader, larger fish will slide along parallel bars and will be directed into an upper flume which will then carry them directly to Tank 1. The smaller fish will drop through the fish grader bars into a lower flume and then will be directed to one of the other tanks (as selected by the operator). As part of the transfer operation, up to 1.8 cfs flume wetting water along with an additional 1.0 cfs of surge from the release operation (2.8 cfs maximum) will be directed to the lower flume and enter Tank 2, 3, 4, or 5. Also as part of the transfer operations a constant 1.3 cfs of wetting water will enter the upper flume and be directed to Tank 1. When the wetting and surge water enters the tanks, the water level will rise in the tanks in order to push the additional flow in the drain pipes to the water control box and overflow the weir in the control. The freeboard in the tanks and the weir length in the water control box were designed to sufficiently handle this surge.

Check valves were provided on the individual drain lines from the tanks because there are times when not all tanks will be in operation and some of the tanks may be empty. When tanks are not in operation, the outlet gate will be opened to empty the tank to the flume system or a drain valve will be opened to drain any water that enters the tank directly to the wet well.

Truck Transfer Tank Drains (Tanks 6 and 7)

The drain system for the truck transfer tanks will be similar to the drains for the holding tanks, however in this case each tank has two 16 inch outlet pipes. As with the holding tanks, this piping will be routed to an off line water control structure (Water Control Box 2) which will centrally controls the water level in each tank, and the individual tank drains will have check valves to allow one tank to be emptied without impacting the operation of the other.

Under normal flow conditions, approximately 90 gpm of life support flow can be directed to each tank, and another 300 gpm of drain water from the holding tanks will enter one of the tanks from the flume system.

During transfer operations, there are a number of surge and wetting water conditions that could enter the truck transfer tanks. These conditions include: fish transfer from the lift hopper to the holding tanks, fish transfer from the lift hopper to the truck transfer tanks and fish transfer from the holding tanks to the truck transfer tanks. Of all of these conditions, the one that causes the largest surge is when fish are transferred from the holding tanks to the truck transfer tanks. In this case there will be approximately 90 gpm of life support water entering both tanks. An additional 300 gpm of life support drain water from the holding tanks, plus an additional surge and wetting water flow of up to 8.12 cfs will be routed through one of the tanks. This water will all be routed to the water control box. The freeboard in the transfer tanks and the weir length in the water control box was designed to sufficiently handle this surge.

Drain from Water Control Box 2 to Pump Vault

All process drain water entering Water Control Box 2 will be routed to the pump vault.

Overflow Drains from the Tower Workup Room to Pump Vault

The tower work up room components will have two drain systems. The normal overflow water will be drained to the pump vault similar to the other process drains and the water containing anesthesia will be routed in a separate drain to the facility sewage holding tank. The overflow drains will constantly drain any life support water provided to the various tanks and components, but the anesthesia drains will be intermittently drained as needed to support the processing operations.

Drain from the Pump Vault to the Wet Well

All process drain water will be directed to the pump vault (from Water Control Box 2 and the tower workup room). The water level in this vault is controlled by standpipe overflow except when the flume supply pumps are operating. When the flume supply pumps are operating, the

water level will be drawn down below the overflow level. It is during this time (when the water level is low) that any surge water from fish transfer operations will likely enter the vault.

For the worst case conditions it was assumed that the pumps failed or a power outage occurred at the same time transfer operations were occurring. In this case the water level in the vault would rapidly rise and the drain system could possibly need to convey up to 8.79 cfs to the wet well. Piping from the pump vault to the well was sized to convey this maximum flow.

12.1.14 Compressed Air Systems

Compressed air for the various gate and valve actuators will be supplied from a central system air station located at an upper level in the FPF tower. This system will utilize the facility plant air supply with an additional air receiver to provide the needed air to the monitoring facility.

12.1.15 Holding Tank Crowders

Electrically powered holding tank crowders will be constructed of stainless steel and will allow personnel to easily crowd fish to the downstream end of the holding tanks for transfer to the processing tanks inside the FPF. The crowders will be designed to move forward and backward at the speed selected by the operator and have a leaf that can be lifted or lowered. The crowder will have a foot section, or brail, that can be used to vertically crowd fish into the transfer flume or to the tower processing area.

12.1.16 Heating and Lighting

Heating and lighting will be provided for the exterior platform areas. Heat will be provided at certain high traffic areas by infrared heaters, and lighting will be provided throughout to allow work in all areas, day or night.

12.1.17 Pumping Systems

The flume and utility water supply pumps will be rail-mounted submersible pumps located in a buried pump vault. There will be a low level float in this vault to shut off and alarm low water conditions. The pump vault itself will be a 9000 gallon precast concrete vault with the lid and hatches rated for H20 loading. The vault was sized to have sufficient volume to allow a truck transfer operation (with a consumptive water use) followed immediately by a fish transfer operation.

The anesthetic circulation pump will be a vertical-mounted plastic pump. The pump will be mounted on a platform above the anesthetic circulation tank and all wetted components will be chemically resistant.

12.2 CONTROLS

Controls for the monitoring station operations will allow semi-automatic and manual operation of all components. In the semi-automatic mode the operator will generally have to initiate an operation, and based upon the selected operation, the controls will start pumps, position gates, open valves and do whatever else is needed to accomplish the operation.

12.2.1 Transfer Operation Controls

Controls for the monitoring station transfer operations will generally allow only one transfer operation to occur at a time. This will limit the amount of flume water that is required and ensure that fish will not be over crowded in the truck transfer tanks. If, for instance, fish are being transferred from the lift hopper to a holding tank, the controls will not allow fish to be transferred from a holding tank to a truck transfer tank.

Graphical status panels will be located near the hopper hoist area, in the holding tank area, inside the tower workup room and near the truck transfer area. These panels will show diagrammatically which flumes are in operation, the diverter gate positions, automated water supply valve positions, where the flume water is being routed to and which pumps are operating. If the operator attempts to do a transfer operation and it is not allowed (either because another operation is already in progress or there has been a component failure), the status panels will give an indication of the problem. The panels will have local displays for alarms and have the provisions to allow the system to interface with remote alarms and monitoring systems.

12.2.1 Lift Hopper Controls

Movement of the hopper will be a manually initiated operation, for safety purposes. The PLC will display the actual depth of the hopper and will activate a warning light if the hopper is not located far enough below the lowest operating fish collector bypass port. This is to ensure adequate hopper submergence below the exit of the lowest operating bypass port. The hopper hoisting sequence will be as follows:

- Fish will be hoisted from the fish well for the purpose of monitoring them at the fish monitoring station or for transferring them to fish transport trucks for release downstream of the dam (or both). Hopper hoisting should only commence if there is sufficient capacity in the downstream facilities (storage tanks, truck available, etc.) ready to receive additional fish. Additionally, hopper hoisting should not commence unless the monitoring station life support water system is functional.
- Fish hoisting should commence when one of the following events has taken place:
    - Fish density sensors (if applicable) indicate that fish volume within the fish well had reached maximum fish hopper capacity.
    - A fish collection timer (time limit on holding fish in the fish well) has expired.

  - A convenient time for fish hoisting presents itself (without exceeding the first two requirements).

- The operator will manually initiate hoisting of the fish hopper at the control panel. The electric hoist will raise the hopper slowly through the fish well water column at 4.5 fpm, while bypass flow and drain flow continues as during normal operation. There will be some disruption of bypass flow for the short duration during which the hopper passes in front of the flowing bypass port(s). Once the hopper leaves the water column (as sensed by a float sensor that will travel with the hopper), the hopper controls will speed up the lift operation to 36 fpm (in order to meet the 40 minute minimum cycle time requirements) until the hopper reaches the 1181 elevation. At the 1181 level the hopper speed will be automatically lower to a lifting rate of 10 feet per minute. The hopper will be lifted up and positioned by the controls such that the outlet can be docked to the flume system at the 1207 ft elevation. Positioning of the hopper will be sensed by rotation sensors on the hoisting system, and once positioned it will give the controls at the docking station permission to allow the docking operation. If the hopper is out of position and an attempt is made to dock to it, an alarm will be actuated and the operation will not be permitted.
- The docking and fish transfer operation will be part of the control system for the monitoring station. To dock the lift hopper to the flume system, an operator on either side of the flume will need to depress push buttons to actuate pneumatic cylinders that will move and extendable pipe section to mate with the lift hopper outlet.
- Once the system is docked and ready (as indicated by a ready light) the operator will initiate a transfer operation, by selecting the tank he or she wishes to route the fish. This activity will initiate the flume wetting water supply system to we the flumes prior to release. When the flume wetting water system is fully developed, the operator will manually open the lift hopper release gate and fish will be transferred to the flume system.
- Once the fish have all been released, the fish hopper will be cleaned and inspected for damage. Cleaning may be accomplished by hosing down and/or manual raking with or without the hopper floor open to a level sufficient for operating purposes. Debris should not be allowed to fall back into the fish well.
- After inspection and cleaning, the hopper will be filled with water to ready it for lowering. This will be accomplished by the monitoring station controls. These controls will not release the hopper for lowering unless it is full of water and it has been undocked from the flume system. Once the docking controls have been given permission for the lowering operation to commence by the docking control system, an operator will initiate lowering and the hoist controls will open the hopper bottom and then begin lowering it. It will be lowered at a rate of 10 feet per minute while above grade, and at elevation 1181, the lifting rate will increase to 72 feet per minute in order to meet the minimum cycle time requirements. It will be lowered through the fish well with the bottom open to allow fish to pass through as it is being lowered.
- The hoist controls will automatically stop the hopper travel at the bottom of the fish well (just before the hopper bottom reaches the fish well drain screen at the bottom of the fish well).

This positioning will be accomplished by rotation sensors at the hoisting drums, and they will position the hopper bottom close enough to the screens to allow a brush that is mounted on the hopper bottom edge to sweep across the screens and clean them when it is closed.

- The hopper controls will then initiate closing of the hopper bottom, and as it closes a brush on the outer edge will sweep the fish well screens to help clean them. With the hopper bottom closed, the hoist controls will then lower the hopper to the lowest fishing level possible to ensure that it is not blocking any of the bypass ports entering the structure. The default position of the hopper will be a position that is several ft above the fish well drain screen surface, although there will be the option of locating the hopper higher up in the fish well if operating the upper fish collectors.
- When it is time to raise the hopper, an operator will manually initiate this operation at the hoist control panel, and lifting of the hopper will be as previously described.
- The hoist system will be set up to allow the semi-automated lifting and lowering operations to be suspended and operated manually. This will allow the operator to stop the hopper at any level and open the bottom. In the manual mode, proximity sensors will be provided to stop upward motion of the hopper before it reaches the hoisting platform.
- Slack rope detectors and overload sensors will be provided on the main lifting drum to stop operation and alarm a potential stall and/or problems with raising and lowering of the hopper. Additional alarms will be provided to indicate a failure to close the bottom and for the hopper being out of position.

12.3 FLOOD AND OFF SEASON PROCEDURES

The following procedures are recommended for Off Season and Flooding Conditions

12.3.1 Off Season Procedures

When the Monitoring Station is taken out of operation it is recommended that that all tanks and equipment be disinfected and dried out. To do this the monitoring station pump vault should be drained and the utility water supply system should be configured to use life support water rather than water from the pump vault. The tanks and flumes should be washed down with the utility water supply hydrants using a disinfectant as recommended by the USACE biologists. All wash down water and disinfectant entering the tanks and flumes will be directed to the empty pump vault. After wash down operations have been completed, a sewage pumper truck should be used to empty the pump vault of the dirty water and disinfectant.

Also during off season conditions it is recommended that all monitoring station controls and water supply systems be disabled and the life support, flume supply and utility water supply piping be drained. It is recommended that the compressed air feeding the monitoring station components be isolated and the pressure bled off.

It is recommended that the lift hopper be lowered to the 1181 foot grade level and be dogged off using the manual securing devices provided by the design and that tension should be released on the hoisting system after the hopper is secured. The hoisting system controls should then be disabled.

12.3.1 Flooding Procedures

Based upon USACE team design meetings, it was determined that the flume system and exterior monitoring station components will not be removed during flooding conditions. Any damage that is incurred by these conditions will need to be repaired after the flooding event.

To prepare for a flood that may over top the 1196 monitoring station deck, all water and control systems should be shut down, and power disconnected to all outdoor equipment, lights and components. There are removable flume sections located at the flume penetrations into the tower and these will need to be removed and gasketed bulk head plates installed over these openings. Interior isolation valves for any piping exiting below the tower below the flood level should be closed to isolate against potential exterior pipe damage.

It is also recommended that the lift hopper be lowered to the 1181 foot grade level and be dogged off using the manual securing devices provided by the design and that the hoisting cables be disconnected and reeled up to the hoist. The hoisting system controls should then be disabled.

CHAPTER 13 OPERATION AND MAINTENANCE

HHD is currently operated under Congressional legislation to provide flood control and low-flow augmentation. The Corps operates the project for flood control and maintains full storage capacity during the flood season, generally November through February. Outside of this window, the project is managed to provide conservation storage that is used to augment flow in the downstream river to benefit fish. The operation of the dam has evolved substantially since it went into operation in 1961.

13.1 FLOOD OPERATIONS

Flood control operations are not expected to change following implementation of the AWS Project relative to current (pre-AWS) flood control operations. As such, storage space of up to 106,000 acre-feet (up to pool el. 1206 feet) will continue to be allocated for flood control during the late fall/winter flood season, which typically covers the period late October through February. Additional details regarding flood control are provided in Section 2.1.9.

13.2 RESERVOIR REFILL

This section summarizes refill of the reservoir related to the storage of water for conservation (low flow augmentation) and M&I purposes and does not apply to reservoir refill specific to flood control operations. The overall approach regarding reservoir refill following implementation of the AWS Project is anticipated to be similar to the approach that has been used in recent years to refill the reservoir for conservation purposes. As such, refill of the reservoir will generally occur between late February and late May or early June. The timing of the onset of refill will vary each year and will depend on factors such as basin snowpack, the potential for flooding in late February, and forecast basin runoff during the refill period. Similar to current refill procedures, it is anticipated that refill will be coordinated with various stakeholder groups via routine water management coordination calls. The specific refill strategy in any given year is expected to consider a variety of factors including seasonal runoff patterns, downstream flow targets and constraints, fisheries needs, and demand for M&I water supply. Separate refill rules will govern the storage of water for conservation purposes (low flow augmentation) and for M&I water supply. For example, the storage of M&I water will be subject to downstream flow constraints per limitations on TPU's SSWR and will be subject to a maximum storage rate of 100 cfs. Storage of water for downstream low flow augmentation, which includes the 5,000 acre-feet of water authorized through Section 1135, is subject to fewer constraints. As such, there is no maximum rate limiting the storage of conservation water in the reservoir. However, it is anticipated that a proportional inflow capture rate strategy may be used to store conservation water per recent refill strategy. As such, the rate at which conservation water is stored in the reservoir will likely be related to reservoir inflows. For example, assuming a fixed inflow target capture rate, the conservation water refill rate would increase as inflows increase and decrease as inflows decrease, thereby allowing downstream flows to mimic the pattern of reservoir inflows.

13.3 RESERVOIR DRAWDOWN

This section summarizes drawdown of the reservoir for conservation (low flow augmentation) and M&I purposes and does not apply to reservoir drawdown specific to flood control operations. The overall period of reservoir drawdown following implementation of the AWS Project will be similar to the drawdown period used for historical operations. Drawdown will likely commence in late May or June each year and will continue throughout the summer and into the fall. The timing of the onset and completion of drawdown will vary each year and will depend on a variety of factors including hydrologic conditions, downstream fisheries needs, downstream flow targets and constraints, and TPU's use of the SSWR water stored in the reservoir.

Separate procedures will likely be used to coordinate the drawdown of stored water for conservation purposes and the drawdown of stored M&I water. It is anticipated that the drawdown of conservation water will be coordinated with various stakeholder groups via routine water management coordination calls similar to current practice. Further details regarding the

drawdown and use of water stored for conservation purposes are provided in Section 13.4. The drawdown of water stored in the reservoir for M&I purposes (TPU's SSWR) will be dictated by the needs of TPU and their municipal water customers. While anticipated usage of TPU's SSWR is unknown, several items related to the SSWR are noteworthy. First, releases of stored water from the reservoir to specifically meet M&I demand will be limited by the diversion capacity into TPU's second supply pipeline at the TPU headworks. Second, releases of stored water from the reservoir for M&I purposes are not subject to downstream flow constraints nor are they subject to a limitation on the maximum release rate (i.e., there is no legal limitation regarding the maximum rate at which stored M&I water can be released from the reservoir).

13.4 LOW FLOW AUGMENTATION

The release of conservation water from the reservoir for the purposes of low-flow augmentation applies to water stored in the reservoir under the original project authorization (roughly 24,200 acre-feet), water stored as part of the Section 1135 project (5,000 acre-feet), and conservation water that will be stored as part of the AWS Project (9,600 acre-feet in Phase II). It is anticipated that the drawdown of conservation water will be coordinated with various stakeholder groups via routine water management coordination calls similar to current practice. The purpose of the coordination calls is to share information regarding current and forecast hydrologic conditions, fisheries reports (i.e., spawning surveys), reservoir status (i.e., current and forecast storage conditions), etc. and to collaborate on a strategy that best utilizes stored conservation water to provide low flow augmentation for the benefit of fish.

Low flow augmentation using stored conservation water in the reservoir is expected to typically commence in late May or June and continue until sometime in the fall. The purpose of the conservation storage tied to the original project authorization (24,200 acre-feet) is to provide low-flow augmentation as needed to maintain a minimum flow in the Green River at the Palmer gaging site of 110 cfs throughout the conservation period (typically June through the fall). In the event of an exceptionally dry fall, if conservation storage is available, augmentation will continue until as late as early December to sustain a minimum flow of 110 cfs at the Palmer gaging site. The release of Section 1135 conservation storage will likely be determined by an adaptive management process that includes consultation with fishery and other resource agencies per current practice. It is anticipated that conservation water stored as part of Phase II of the AWS Project will also be released using an adaptive management process. Management strategies may include using stored water to meet desired downstream minimum flow targets and providing pulses of water to benefit fish (i.e., artificial or enhanced freshets to facilitate spawning).

13.5 TEMPERATURE MANAGEMENT

This information has not been fully developed at 35 percent. As the design undergoes further refinement, this issue will be fully addressed.

13.6 DEBRIS MANAGEMENT

Winter floods bring floating debris, mostly in the form of wind-blown tree branches and entire trees, from the upper reservoir area. The debris is held behind log booms until the temporary pool drops. During the spring, the debris floats again as the pool is raised for the low-flow augmentation season. The preferred storage area requires a reservoir of el. 1141 to 1147 feet. This storage location will be moved as a result of the larger el. 1167 reservoir.

During periods of high water, most of the floating debris is collected at two stationary log booms. Debris trapped by the booms is collected in sack booms and towed by barge to the temporary holding areas. Larger floating and sunken debris passing the booms may lodge against the intake structure trashrack bars and is removed periodically.

Debris that is not collected at the log booms or trashrack can pass through the outlet tunnel and on downstream.

When the conservation pool is at its maximum elevation in early summer the debris is towed from the temporary holding areas to the upper reservoir debris handling areas. When the pool level has been lowered and ground conditions permit, the booms and salvageable material are removed. Until recently, the remainder has been sawed and piled by bulldozers for burning. In the past 2 years the Corps and other resource agencies have used some of the larger collected debris in environmental restoration projects. With implementation of the Section 1135 and AWS Projects, virtually all wood may be used in some fashion for environmental restoration. Materials not used for environmental restoration may be sawed to convenient lengths and piled by bulldozers for burning when the necessary burning permits have been obtained and local climatic conditions permit (USACE 2000).

13.6.1 Containment and Defense Facilities

This information has not been fully developed at 35 percent. As the design undergoes further refinement, this issue will be fully addressed.

13.7 FISH HANDLING

A conceptual operating schedule for the downstream fish passage facility was developed to help guide the design process. Important considerations in developing the conceptual operating schedule include:

- Operating at extreme conditions may require design characteristics that are less effective than under other conditions.
- There is a need to balance requirements to pass as many fish as possible with practical design, construction and operational considerations.
- The objective of the downstream fish passage facility is to provide safe passage through the HHD project.

- There is a need to balance needs of fish passage with operational constraints.

When the reservoir pool is below el. 1080 feet, fish can pass safely through the radial gates (based on prior HHD tests and comparisons to other projects (Seiler 1985; Dilley and Wunderlich 1992, 1993)). When the pool is above el. 1080, fish may be delayed and not sound or are unable to find the gates. Previous studies have indicated that juvenile salmon require a near-surface outlet. The fish passage facility houses an inclined screen. This was selected as the preferred option for the intake screen because of their high volume and small size compared to conventional screening technology (USACE 1998a).

The fish passage facility range of operating pool levels will be from el. 1080 to 1177 feet. Phase I summer pool is el. 1167 feet; Phase II is el. 1177 feet. Phase II will not proceed until potential deleterious effects of Phase 1 are successfully mitigated and all resource agencies and tribes agree that Phase II is necessary and acceptable. It is more efficient to build to el. 1177 feet rather than build to el. 1167 feet and retrofit later. Operating the fish passage facility up to el. 1177 feet will cover the entire range of expected spring and summer operating conditions and nearly all expected winter operations. During the winter flood control season (November 15 to March 15), the reservoir pool was above el. 1177 only twice in the 38-year record of project operations and only for a few days each time.

13.7.1 Proposed Periodicity of Fish Passage Facility Operation

The existing HHD Project is currently operated to provide winter and spring flood control and summer low-flow augmentation for instream natural resources. The AWS Project increases the level of spring and summer storage but will not affect existing flood control capabilities. The amount of reservoir storage required to maintain flood control capabilities varies on a seasonal basis. The full 106,000 ac-ft of flood control storage behind Howard Hanson Dam is needed during the late fall/winter months. During the fall and spring shoulder periods, less than 106,000 ac-ft is needed, with the actual amount dependent on precipitation patterns. During the summer months, reservoir storage is not required to meet flood control responsibilities. The expected dates of the various periods are described as follows: The actual dates vary with flood control requirements and other hydrometeorological variations. These seasons and dates usually include other purposes (including operation of the fish passage facility).

Season	Dates
Winter	November 1 – February 14
Spring Shoulder	February 15 – February 29
Refill Period	March 1 – June 30
Summer	July 1 – September 30
Fall Shoulder	October 1 – October 31

The downstream fish passage facility proposed as part of the AWS Project consists of a new tower, five intake horns each of which includes an inclined screen and fish bypass pipe, a fish well, and a monitoring facility. Operation of the fish passage facility is needed to pass fish safely downstream of Howard Hanson Dam. It is critical that the fish passage facility not interfere with flood control operations. The following proposed schedule of fish passage facility operation will provide downstream passage of fish below Howard Hanson Dam during the vast majority of potential fish movement.

13.7.2.1 Winter Operation

During the period December 1 through February 14, the full 106,000 ac-ft of available flood storage is needed at Howard Hanson Dam (see Figure 13-2). The reservoir is normally kept near el. 1070 feet during the winter. During the flood control season, the reservoir is kept as low as possible so that runoff from the Green River watershed above HHD can be impounded to keep the mainstem Green River at Auburn less than 12,000 cfs. During flood control operations, the reservoir is allowed to fill to reduce downstream flooding. As flows at Auburn begin to approach 10,000 cfs, reservoir releases are reduced and the reservoir level rises. After flows at Auburn begin to naturally decline following the runoff event, the reservoir pool is evacuated to maintain the required level of flood storage. When the reservoir is above the conservation pool, releases are made to draw the reservoir back to the conservation pool without exceeding the channel capacity.

During the winter flood control season, the reservoir pool level can rise rapidly in response to winter storms. Over the 38-year period (1962 - 1999), the reservoir pool has risen more than 40 vertical feet in a day on 13 separate occasions. During periods of rapid pool rise, project staff may be not be able to change the traction water levels of the multi-level FPF as rapidly as needed to provide safe downstream fish passage, and still respond to flood control duties. For this reason, operation of the fish passage facility will be suspended during the winter flood control season from November 1 through February 14 (Table 13-1). Maintenance of the fish passage facility will likely occur between November 1 and February 14, depending on within-year flood operations. During this period, the fish passage facility will be offline and all water will be released through the radial gates. Fish attempting to pass downstream during a flood control operation may be delayed due to a pool elevation above 1080 feet. After a storm, the pool is quickly evacuated to make flood storage available, thereby limiting the likelihood of trapping fish behind Howard Hanson Dam during the winter months. Between 1962 and February 1999, the reservoir pool behind Howard Hanson Dam has been held above el. 1160 feet a total of only 17 days and less than 4 percent of the time above el. 1100 feet. Operation of the fish passage facility would be expected to begin on or about February 15 as refill of the reservoir begins at that time, subject to current flood operations.

13.7.2.2 Spring Shoulder

The fish passage facility is designed to operate when 1) HHD inflow is less than 4,000 cfs and 2) pool is stable, dropping or rising less than 5 feet per day (Table 13-1). During the spring shoulder period, fish would pass the facility, or pass through the radial gates with a

reservoir pool less than el. 1080 feet nearly 94 percent of the time (Table 13-2). During this period, rapid pool rises of over 5 feet per day are possible. In addition, any flood can bring in debris, including submerged logs that would pass under the log boom, and could lodge in the structure. This is a year-round concern.

13.7.2.3 Spring Reservoir Refill

As during the spring shoulder, the fish passage facility is designed to operate when 1) HHD outflow is less than 4,000 cfs and 2) pool is stable, dropping or rising less than 5 feet per day. Rapid pool rises of over 5 feet per day are possible but are very infrequent during this period compared to the spring shoulder. During this period, fish would pass the facility, or pass through the radial gates with a reservoir pool less than el. 1080 feet nearly 99 percent of the time (Table 13-2). During the spring refill season, the Corps attempts to satisfy instream flow targets while achieving refill requirements. Flows are released equal to or greater than the desired flow when inflow and/or storage are available. Minimum instream flows are detailed in Chapter 2.

13.7.2.4 Summer Low-flow Augmentation

Proposed operation schedule will provide downstream fish passage through the fish passage facility on a daily basis through September. During this period, a defined thermocline typically develops in the reservoir. In order to pass fish efficiently and also to control downstream temperature, collectors will likely operate at certain depths below the surface or in combination with a collector fishing at the surface. This is an example of where adaptive management will be prominent. The goal is to optimize fish passage by fishing at reservoir depths containing fish, and optimizing downstream temperatures throughout the summer months.

13.7.2.5 Fall Shoulder

The actual amount of flood control storage required during the fall months is variable depending on the duration of the low-flow season and the onset of fall rains.

The fish passage facility is designed to operate when 1) HHD inflow is less than 4,000 cfs and 2) pool is stable, dropping or rising less than 5 feet per day. During the fall shoulder period, fish would pass the facility, or pass through the radial gates with a reservoir pool less than el. 1080 feet nearly 88 percent of the time (Table 13-2). Water management concerns are the same as for the spring shoulder. Also note that the project drops to below el. 1080 feet earlier than November 30 during most years. Operating until November 30 is by far the exception to the rule.

Figure 13-1. Timing of freshwater life phases of selected salmonid species in the Green/Duwamish basin.

Species	Freshwater	Jan		Feb		Mar		Apr		May		Jun		Jul		Aug		Sep		Oct		Nov		Dec	
	Life Phase	1-15	16-31	1-15	16-28	1-15	16-31	1-15	16-30	1-15	16-31	1-15	16-30	1-15	16-31	1-15	16-31	1-15	16-30	1-15	16-31	1-15	16-30	1-15	16-31
Steelhead - adults	Kelt Outmigration																								
Steelhead - smolts	percent of smolt																								
	outmigration *																								
	o																								
	Smolt Outmigration							5%	20%	25%	25%	20%	5%												
Coho	percent of smolt																								
	outmigration *																								
	o																								
	Smolt Outmigration							5%	20%	25%	25%	20%	5%												
Chinook - fry	percent of fry																								
	outmigration *																								
	o																								
	Fry Outmigration	< 5%		10%		20%		20%		20%		10%		< 5%		< 5%		< 5%		< 5%					
Chinook - smolts	percent of smolt																								
	outmigration *																								
	o																								
	Smolt Outmigration						5%	10%	20%	20%	20%	20%	5%											Ver: 06/13/00	

Figure 13-2. Flood control storage curve for Howard A. Hanson Reservoir.

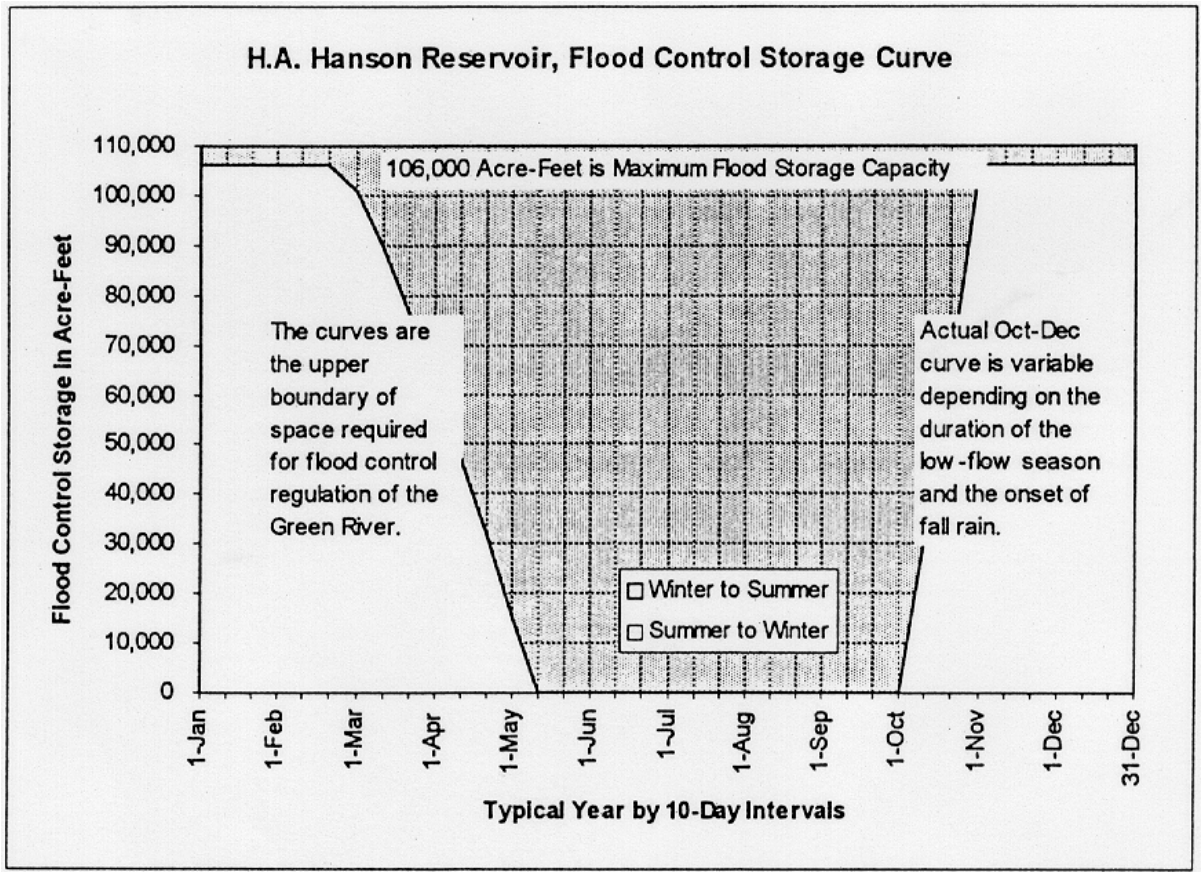

TABLE 13-1. PROPOSED SCHEDULE OF OPERATION OF DOWNSTREAM FISH PASSAGE FACILITY (MODULAR INCLINED SCREEN)

No = Modular Inclined Screen not operational, fish must exist through the radial gates or hold in the reservoir
IS Operating = Inclined screen is operating to bypass fish into the fish lock
Not Applicable = Project conditions do not exist (i.e. reservoir pool exceeds stated elevation)

Season	Month	Day	Reservoir Elevation Less Than 1080 ft (fish to pass through radial gates)	Reservoir Pool Elevation 1080 ft to 1177 ft	
				Inflow less than 4,000 cfs and pool is stable, dropping, or rising less than 5 ft/day	Inflow more than 4,000 cfs, or rising more than 5 ft/day
Winter	January	1-15	No	No	No
		16-31	No	No	No
	February	1-14	No	No	No
Spring Shoulder		15-29	No	IS Operating	No
	March	1-15	No	IS Operating	No
		16-31	No	IS Operating	No
Spring Refill	April	1-15	Not Applicable	IS Operating	No
		16-30	Not Applicable	IS Operating	No
	May	1-15	Not Applicable	IS Operating	No
		16-31	Not Applicable	IS Operating	No
	June	1-15	Not Applicable	IS Operating	No
		16-30	Not Applicable	IS Operating	No
Summer	July	1-15	Not Applicable	IS Operating	No
		16-31	Not Applicable	IS Operating	No
	August	1-15	Not Applicable	IS Operating	No
		16-31	Not Applicable	IS Operating	No
	September	1-15	Not Applicable	IS Operating	No
		16-30	Not Applicable	IS Operating	No
Fall Shoulder	October	1-15	No	IS Operating	No
		16-31	No	IS Operating	No
	November	1-15	No	IS Operating	No
		16-30	No	IS Operating	No
Winter	December	1-15	No	No	No
		16-31	No	No	No

TABLE 13-2. ESTIMATED PERCENT OF TIME THAT FISH PASSAGE FACILITY WILL BE OPERATED UNDER THREE GIVEN CONDITIONS (USACE RECORDS: JANUARY 1, 1962 – FEBRUARY 9, 1999)

	Jan	Feb	Mar	Apr	May	Jun	Jul	Aug	Sep	Oct	Nov	Dec
Pool <1080 ft. [2]	89	44	<5	0	0	0	0	0	3	10	34	87
IS Operating [3]	0	48	94	99	99	99	100	100	97	88	60	0
Estimated Fish Passage Delays [4]	11	8	1	1	1	<1	0	0	0	2	6	16

13.8 DAILY OPERATIONS

13.8.1 Normal

Collecting, recording, and reporting data are routine functions required at all Corps projects, including HHD. Each normal workday, project personnel collect the maximum and minimum air temperature, snowfall and snow depth, and precipitation in the manual gage. This information, along with daily precipitation and turbidity readings obtained from Tacoma's headworks station, are reported to HHD. Project personnel collect inflow and outflow temperature and turbidity once per workday.

Additionally, Corps personnel are responsible for inspection, maintenance and operation of all facilities associated with HHD (dam, monitoring station, buildings, reservoir, equipment, painting, piezometers/wells, roads).

13.8.2 Emergency

Some deviation from normal operation can be expected during construction periods, either downstream of the project or in the reservoir, during inspection of gates and other operational equipment, and during operations and testing for the fishery that may be performed from time to time by the Corps or other interests. There have also been occasions when special requests have been received from law enforcement agencies for reduced flows to perform search and rescue operations in the river typically for drowning victims. The Corps coordinates special requests with resource agencies (MIT, WDFW, NMFS and USFWS, etc.) when possible.

[2] pool level less than el. 1080 feet and fish passing through the radial gates
[3] the downstream fish passage facility operational
[4] fish passage assumed to be delayed based on suspended FPF operation caused by the reservoir pool greater than el. 1080 feet or reservoir pool elevation rising more than five feet per day. Anticipated delays in downstream fish passage due to rapid rising or lowering of the reservoir pool are typically one to three days in duration.

13.9 REFERENCES

Bostick, W.E. 1955. Duwamish river seining studies. Puget Sound Stream Studies, Progress Report July-November 1953. Washington Department of Fisheries, Olympia, Washington.

Busby, P. J., T. C. Wainwright, G. J. Bryant, L. J. Lierheimer, R. S. Waples, F. W. Waknitz, and I. V. Lagomarsino. 1996. Status review of west coast steelhead from Washington, Oregon, and California. National Oceanic and Atmospheric Administration (NOAA) Technical Memorandum NMFS-NWFSC-27, Seattle, Washington.

Cederholm, C. J. and W. J. Scarlett. 1982. Seasonal immigrations of juvenile salmonids into four small tributaries of the Clearwater River, Washington, 1971-1981. Pages 98-110 *in* E. L. Brannon and E. O. Salo, editors. Proceedings of the salmon and trout migratory behavior symposium. University of Washington, School of Fisheries, Seattle, Washington.

Chapman, D.W. 1962. Aggressive behavior in juvenile coho salmon as a cause of emigration. Journal of Fisheries Research Board of Canada 19(6):1047-1080.

Chapman, D.W. 1966. Food and space as regulators of salmonid populations in streams. The American Naturalist 100:345-357.

Dilley, S. J. 1994. Horizontal and vertical distribution of juvenile salmonids in Howard Hanson Reservoir. Prepared by the U.S. Fish and Wildlife Service, Western Washington Fishery Resource Office, Olympia, Washington. 42 p.

Dilley, S. J., and R. C. Wunderlich. 1992. Juvenile anadromous fish passage at Howard Hanson Project, Green River, Washington, 1991. Prepared by the U.S. Fish and Wildlife Service, Western Washington Fishery Resource Office, Olympia, Washington.

Dilley, S. J., and R. C. Wunderlich. 1993. Juvenile anadromous fish passage at Howard Hanson Project, Green River, Washington, 1992. Prepared by the U.S. Fish and Wildlife Service, Western Washington Fishery Resource Office, Olympia, Washington.

Dunstan W. 1955. Green River downstream migration. Puget Sound Stream Studies. Progress Report. Washington Dept. of Fisheries, Olympia, Washington.

Grette, G. B., and E. O. Salo. 1986. The status of anadromous fishes of the Green/Duwamish river system. Prepared for the U.S. Army Corps of Engineers.

Heg, R.T. 1954. Passage of fish through Mud Mountain Dam. Puget Sound Stream Studies: White River. State of Washington Department of Fisheries, Olympia, Washington. 15 p.

Healey, M.C. 1991. Life history of Chinook salmon (*Oncorhynchus tshawytscha*) *in* C. Groot and L. Margolis, editors. Pacific salmon life histories. University of British Columbia Press, Vancouver, British Columbia.

Jeanes, E. D. and P. J. Hilgert. 1999. Results of 1998 side channel and freshet fisheries surveys in the middle Green River, Washington. R2 Resource Consultants, Inc. Report for the U.S. Army Corps of Engineers, Seattle, Washington.

Lister, D.B., and H.S. Genoe. 1970. Stream habitat utilization by cohabiting underyearlings of Chinook (*Oncorhynchus tshawytscha*) and coho (*O. kisutch*) salmon in the Big Qualicum River, British Columbia. J. Fish. Res. Board Can. 27: 1215-1224.

Myers, J. M., R.G. Kope, G. J. Bryant, D. Teel, L. J. Lierheimer, T. C. Wainwright, W. S. Grant, F. W. Waknitz, K. Neely, S. T. Lindley, and R. S. Waples. 1998. Status review of Chinook salmon from Washington, Idaho, Oregon, and California. U.S. Department of Commerce, National Oceanic and Atmosphere Administration Technical Memorandum NMFS-NWFSC-35, 443 p.

Meigs, R.C. and C.F. Pautzke. 1941. Additional notes on the life history of the Puget Sound steelhead (*Salmo gairdnerii*). State of Washington Department of Game Biological Bulletin No. 3, Seattle, Washington. 13 p.

Pautzke, C.F. and R.C. Meigs. 1940. Studies on the life history of the Puget Sound steelhead (*Salmo gairdnerii*). State of Washington Department of Game Biological Bulletin No. 3, Seattle, Washington.

Reimers, P.E. 1971. The length of residence of juvenile fall Chinook salmon in Sixes River, Oregon. Ph.D. Thesis. Oregon State University, Corvallis, Oregon. 99 p.

Sabo, J.L. 1995. Competition between stream-dwelling cutthroat trout (*Oncorhynchus clarki clarki*) and coho salmon (*O. Kisutch*): implications for community structure and evolutionary ecology. Masters thesis. University of Washington. Seattle, Washington. 82 p. + appendices

Sandercock, F.K. Life history of coho salmon (*Oncorhynchus kisutch*). Pages 395-446 *in* C. Groot and l. Margolis, editors. Pacific salmon life histories. UBC Press. Vancouver, British Columbia.

Seiler, D. and S. Neuhauser. 1985. Evaluation of downstream migrant passage at Howard Hanson Dam, Green River. *In* Evaluation of downstream migrant passage at two dams: Condit Dam, Big White Salmon River, 1983 and 1984; Howard Hanson Dam, Green River, 1984. Washington Department of Fisheries, Progress Report No. 235, Olympia, Washington. 94 p.

USACE. 2000. Howard Hanson Dam: Programmatic Biological Assessment for Continued Operation and Maintenance and Phase I of the Additional Water Storage Project. April 2000. Prepared HDR Engineering and R2 Resource Consultants for the Seattle District, U.S. Army Corps of Engineers, Seattle, Washington.

USACE. 1998a. Additional water storage project, draft feasibility report and EIS. Appendix F, Environmental, Part 1 Fish Mitigation and Restoration. U.S. Army Corps of Engineers, Seattle District, Seattle, Washington.

USACE. 1998b. Water Control Manual, Howard Hanson Dam, Green River Washington. Prepared by the Seattle District, U.S. Army Corps of Engineers, Seattle, Washington. September 1998.

USACE. 1996. Howard A. Hanson Dam, Environmental Impact Statement for Operation and Maintenance; Appendix on Flood Control Operation. Prepared by the Seattle District, U.S. Army Corps of Engineers, Seattle, Washington. June 1996.

Weitkamp, D.E. and R.F. Campbell. 1979. Port of Seattle, Terminal 107 Fisheries study. Document No. 79-1120-034FD. Parametrix, Incorporated, Kirkland, Washington.

Wydoski, R. S., and R. R. Whitney. 1979. Inland fishes of Washington. University of Washington Press, Seattle, Washington. 220 p.

CHAPTER 14 REAL ESTATE

14.1 GENERAL DESCRIPTION

The Additional Water Storage Project involves a total of 2,132.40 acres of land for initial construction of this federally assisted project. Project features, including the new fish passage facility, and constructing a new maintenance building, monitoring building, and generator building, are all on existing Corps fee project lands. The AWS also includes acquisition and development of mitigation and restoration sites for wildlife and fish habitat sites, including a culvert at fish site VF-4; and extension of an existing underground drainage tunnel.

14.2 CONSTRUCTION PHASES

The current plan is for construction to take place in two phases. Phase I pool raise and mitigation sites are to contour el. 1167 feet. Phase I also includes geotechnical investigation and applicable work, construction of the new buildings, development of some of the fish and wildlife mitigation sites, construction of the new Fish Passage Facility, installation of two inclinometers at the Charley Creek slide area, extension of the existing underground drainage tunnel, and three temporary staging areas. Phase II pool rise, fish and wildlife mitigation and restoration sites are to contour el. 1177 feet. Detailed descriptions of the fish and wildlife mitigation and restoration sites associated with each phase will be included in a companion report to this DDR, to be published in the future. These project features are briefly described in Chapter 1.

14.3 POOL RAISE, FISH AND WILDLIFE MITIGATION AND RESTORATION SITES

The land in the reservoir area is zoned forest, with the existing use as forest. The non-federal sponsor (City of Tacoma) is the fee owner of a majority of the land in the reservoir area needed for additional water storage. Some of the pool raise encompasses fee land owned by the Corps, as well as Burlington Northern Santa Fe Railroad, CITYFOR, Washington State Department of Natural Resources, Plum Creek Timber Company, Washington State Aeronautical Division/Department of Transportation, and Weyerhaeuser Company. Seattle District is recommending the non-federal sponsor acquire a fee interest for lands it does not already own for the pool raise, except Corps fee lands. The gross appraisal report for this project indicates the value of a permanent flowage easement is tantamount to the fee value; that is, there is a 10 percent difference between the permanent flowage easement and fee value of the taking. The non-federal sponsor will not receive credit for any of the existing Corps fee owned lands encompassed by the pool raise. To mitigate for the AWS storage project the non-federal sponsor will need to acquire and or make available 1,607.73 acres for fish and wildlife mitigation and restoration. The

non-federal sponsor can currently demonstrate fee ownership of 1,153.27 acres fee for fish and wildlife mitigation and restoration sites, and pool raise area. A total of 34.21 acres are needed for permanent access to the fish and wildlife mitigation and restoration sites. Two temporary work areas are needed during construction of fish sites LMS-04 and LMS-01. Each temporary work area is 0.23 of an acre in size. A pipeline easement for a culvert may be needed at fish site VF-4. The lands needed downstream of the dam and outside the Corps fee owned lands are a mix of residential, farm, and public lands.

14.4 EXTENSION OF EXISTING UNDERGROUND DRAINAGE TUNNEL

Extension of an existing Corps underground drainage tunnel may be necessary as a result of the AWS Project during Phase I. The non-federal sponsor already owns the land beyond the limits of the existing tunnel. The non-federal sponsor will need to make available a perpetual easement estate similar to the easement estate acquired by the Corps in 1968 for the existing underground drainage wells and drainage tunnel (see Paragraph, Non-Standard Estate, below).

14.5 GEOTECHNICAL WORK AREAS AND BUILDINGS ON CORPS-OWNED LANDS

Phase I geotechnical work areas (namely, a temporary disposal site, staging area, work area for grout work, and access to grout work area) fall within the Corps fee lands for the dam and its operation. Phase I also includes constructing a new maintenance building, monitoring building, and administration building, and a generator building all on existing Corps lands. The non-federal sponsor will not receive credit for any of the Corps fee owned lands needed for construction of the AWS Project.

14.6 GEOTECHNICAL WORK AREA DISPOSAL SITE OUTSIDE CORPS-OWNED LANDS

There is one additional geotechnical work disposal site needed that is outside Corps fee lands. The non-federal sponsor will need to provide a temporary disposal site easement for use of this site during Phase I. Tables 14-1 and 14-2, list acreages and property interest of the lands, easements, and rights-of-way, for Phase I and Phase II, respectively, that the non-federal sponsor will need in support of the AWS Project.

TABLE 14-1. PHASE I PROJECT REAL ESTATE INTERESTS

Estate	Acreage	Estimated Value
Fee (Mitigation & Restoration Sites)	1,074.61	$1,003,000
Fee (Pool Raise)	364.15	$36,100
Permanent Road Easements	34.21	$171,000
Pipeline Easement (VF-04)	0.80	$720
Underground Tunnel Extension Easement	0.69	$100
Two Temporary Staging Areas (3 years)	.46	$1,950
Temporary Disposal Easement (3 years)	9.32	$2,700
TOTAL	1,484.24	$1,215,670

TABLE 14-2. PHASE II PROJECT REAL ESTATE INTERESTS

Estate	Acreage	Estimated Value
Fee (Mitigation and Restoration Sites)	533.12	$1,848,900
Fee (Pool Raise)	114.94	12,100
TOTAL	648.06	$1,861,000
GRAND TOTAL PHASE I & II	2,132.40	$3,077,000(RD)

Currently there are seven outgrants in the vicinity of this project, three with the City of Tacoma. The others are: U.S. Department of Agriculture (Forest Service), State of Washington (Department of Natural Resources), State of Washington (Department of Fish and Wildlife), and Weyerhaeuser Company. All outgrants are revocable at will by the Department of the Army. Assessment of potential project impact of these and any new outgrants will be reassessed during project plans and specifications and before advertisement for construction.

The non-federal sponsor is responsible for all “operation and maintenance costs" associated with the AWS project, including land maintenance activities. This includes the extra costs associated with operating and maintaining the new tower and fish passage, the higher pool, and the non-fish passage and wildlife restoration and mitigation features. The Corps will maintain control of the dam, and its function.

14.7 ESTATES, GENERAL

This report is based on the requirement and assessment of fee value for the restoration and mitigation sites as prescribed by federal regulation. However, during the study investigation process and discussions with the non-federal sponsor, it appears that some of the restoration and mitigation sites contained in this report may fall on state park or other public agency lands. The

state or other public agencies may not be able to convey to the non-federal sponsor a fee interest for the fish and wildlife mitigation and restoration sites. The non-federal sponsor will try to acquire fee where possible; however, where it is not possible, the approved nonstandard estates presented in Paragraph, Non-Standard Estates, below, will be used as the alternative to fee acquisition. The non-federal sponsor is agreeable to acquiring a fee interest for the fish and wildlife enhancement sites where possible. The District will advise the non-federal sponsor of this requirement again during the project implementation phase. For cases where fee acquisition may not be possible, that is, state park lands, the District will instruct the non-federal sponsor to use the approved non-standard estates presented below.

The non-standard easement estate for the tunnel extension is based on an approved estate used by the District in September 1968, for the underground drainage tunnel construction for the original Howard Hanson Dam Flood Control Project.

The non-standard easement estate for the inclinometers is new. The inclinometer non-standard estate is similar to the "Utility and/or Pipeline Easement" with minor modifications (see underlined portion of text).

14.8 STANDARD ESTATES

The following standard estates apply to this project.

14.8.1 Fee Estate

The fee simple title, (the land to be described), subject, however, to existing easements for public roads and highways, public utilities, railroad and pipelines.

14.8.2 Road Easement

A perpetual and assignable easement and right-of-way in, on, over and across (the land to be described) for the location, construction, operation, maintenance, alteration and replacement of (a) road(s) and appurtenances thereto; together with the right to trim, cut, fell and remove there from all trees, underbrush, obstructions and other vegetation, structures, or obstacles within the limits of the right-of-way; (reserving, however, to the owners, their heirs and assigns, the right to cross over or under the right-of-way as access to their adjoining land at the locations indicated in Schedule B); subject, however, to existing easements for public roads and highways, public utilities, railroads and pipelines.

14.8.3 Pipeline Easement

A perpetual and assignable easement and right-of-way in, on, over and across (the land to be described), for the location, construction, operation, maintenance, alteration, repair and patrol of an underground pipeline; together with the right to trim, cut, fell and remove there from all trees, underbrush, obstructions and vegetation, structures, or obstacles within the limits of the

right-of-way; reserving, however, to the landowners, their heirs and assigns, all such rights and privileges as may be used without interfering with or abridging the rights and easement hereby acquired; subject, however, to existing easements for public roads and highways, public utilities, railroads and pipelines.

14.8.4 Temporary Disposal Easement

A temporary and assignable easement and right-of-way in, on, over, and across (the land to be described) for a period not to exceed 3 years, beginning with the date possession of the land is granted to the United States, for use by the United States, its representatives, agents, and contractors as a disposal area, including the right to deposit fill, dredged material and waste material thereon, move, store, and remove equipment and supplies, and erect and remove temporary structures on the land and to perform any other work necessary and incident to the construction of the Howard Hanson Dam Additional Water Storage Project, together with the right to trim, cut, fell and remove there from all trees, underbrush, obstructions, and any other vegetation, structures or obstacles, within the limits of the right-of-way; reserving, however, to the grantors, their heirs and assigns, all such rights and privileges as may be used without interfering with or abridging the rights and easement hereby acquired; subject, however, to existing easements for public roads and highways, public utilities, railroads and pipelines.

14.8.5 Temporary Work Area Easement

A temporary and assignable easement and right-of-way in, on, over, and across (the land to be described) for a period not to exceed 3 years beginning with the date possession of the land is granted to the United States, for use by the United States, its representatives, agents, and contractors as a work area, including the right to move, store, and remove equipment and supplies, and erect and remove temporary structures on the land and to perform any other work necessary and incident to the construction of the Howard Hanson Dam Additional Water Storage Project, together with the right to trim, cut, fell and remove there from all trees, underbrush, obstructions, and any other vegetation, structures or obstacles, within the limits of the right-of-way; reserving, however, to the grantors, their heirs and assigns, all such rights and privileges as may be used without interfering with or abridging the rights and easement hereby acquired; subject, however, to existing easements for public roads and highways, public utilities, railroads and pipelines.

14.9 NON-STANDARD ESTATES

The following non-standard estates apply to this project.

14.9.1 Drainage Wells and Underground Drainage Tunnel

A perpetual and assignable easement and right of way in, on, under, over and across the above (the land to be described) for the location, construction, operation, maintenance, alteration, and repair of drainage wells and an underground drainage tunnel; together with the right to trim, cut, fell, and remove there from, trees, underbrush, obstructions, and other vegetation, structures or obstacles within the limits of the right of way, which obstruct drilling of drainage wells; reserving, however, to the Grantor, its successors and assigns, all such rights and privileges as may be used without interfering with or abridging the rights and easement hereby granted; subject, however, to existing easements for public roads and highways, public utilities, railroads and pipelines, and to reservations, exceptions and any other outstanding rights contained in or referred to in patents issued by the United States.

14.9.2 Modifications for Environmental Restoration and Mitigation

a. Easement for Channel Improvement and Riparian Enhancement -- UPLAND LOCATION: A perpetual and assignable right and easement in, on, over and across (the land to be described) to construct, operate, maintain, repair and replace channel features, planting and any other improvements within the riparian/river corridor for fish and wildlife habitat improvements and other environmental benefits; including the establishment or introduction of vegetation and plantings; and any measures or modifications including placement of other materials, together with any necessary access for construction, operation, repair or replacement; reserving however to the owners, their heirs and assigns all other rights and privileges that may be used without interfering with or abridging the enumerated rights and easement hereby conveyed and acquired; the grantor's reserved rights include all rights to restrict, control or limit access by the public at large, unless otherwise granted or conveyed to competent public authority; all subject to existing easements of public roads and highways, public utilities, railroads and pipelines.

b. Easement for Channel Improvement and Riparian Enhancement - SIDE CHANNEL LOCATION: A perpetual and assignable right and easement in, on, over and across (the land to be described) to construct, operate, maintain, repair and replace channel features, plantings and any other improvements within the riparian/river corridor for fish and wildlife habitat improvements and other environmental benefits; including the removal or placement of gravels, cobbles or boulders, structures, open channels, pipes or other conveyances that redirect or recharge the flow to adjacent side channels or riparian areas; together with any necessary access for construction, operation, repair or replacement; reserving however to the owners, their heirs and assigns all other rights and privileges that may be used without interfering with or abridging the enumerated rights and easement hereby conveyed and acquired; the grantor's reserved rights include all rights to restrict, control or limit access by the public at large, unless otherwise granted or conveyed to competent public authority; all subject to existing easements of public roads and highways, public utilities, railroads and pipelines.

c. Easement for Channel Improvement and Riparian Enhancement -- IN CHANNEL LOCATION and WETLAND LOCATIONS: A perpetual and assignable right and easement in, on, over and across (the land to be described) to construct, operate, maintain repair and replace channel features, plantings and any other improvements within the riparian/river corridor for channel and bank stabilization, fish and wildlife habitat improvements and other environmental benefits; including the removal or placement of gravels, cobbles or boulders, bank vegetation and plantings and any measures or modifications including the placement of other materials or structures in the bed or banks that modify, augment, direct or influence stream velocity or channel form; together with any necessary access for construction, operation, repair or replacement; reserving however to the owners, their heirs and assigns all other rights and privileges that may be used without interfering with or abridging the enumerated rights and easement hereby conveyed and acquired; the grantor's reserved rights include all rights to restrict, control or limit access by the public at large, unless otherwise granted or conveyed to competent public authority; all subject to existing easements of public roads and highways, public utilities, railroads and pipelines.

CHAPTER 15 COST ENGINEERING

15.1 COST ESTIMATE

A cost estimate for the Fish Passage Facility design is currently being developed by the Corps' Seattle District and will be made available for future submittals as a separate file.

CHAPTER 16 CONSTRUCTION CONSIDERATIONS

16.1 OPERATION AND MAINTENANCE DURING CONSTRUCTION

16.1.1 Reservoir Refill and Flow Augmentation

Annual refill of the existing conservation pool and Section 1135 storage is coordinated through federal, state, local and tribal technical staff. Representatives from these organizations also provide recommendations on changes in outflow releases during the low-flow augmentation seasons. Regular coordination with these groups will be necessary prior to and during construction of the fish passage facility.

16.1.2 Fish Handling

Since HHD does not have a dedicated fish passage facility until the AWS Project facility is completed, active handling of juvenile or adult salmonids is not anticipated to be part of the construction process.

16.2 ENVIRONMENTAL COMPLIANCE

The following permits, approvals, and/or consultations may be required to construct the proposed fish passage facility and complete the pool raise for the AWS Project: many of the same permits will be required for construction of fish and wildlife habitat mitigation and restoration projects planned under the AWS Project (Reference Draft AWS Project Fish and Wildlife Mitigation and Restoration Conceptual Design Report).

- **U.S. Army Corps of Engineers**

Section 404 Clean Water Act/Section 10 Rivers and Harbors Act. Requirements for Section 404 of the Clean Water Act and Section 10 of the Rivers and Harbors Act have been achieved and are detailed in the substantive compliance document completed in 2002. An evaluation of compliance with the Regulatory program of the Corps of Engineers will be completed associated with any pertinent work within waters of the United States (including wetlands).

- **Washington Department of Fish and Wildlife**

The Corps will be in coordination with the WDFW to assure adherence to the state's Hydraulic Code. Adherence to the Hydraulic Code includes conducting all construction work within established "fish windows." General timelines for these windows are largely restricted to the low-flow season: divergence from these restricted time periods is covered on a case-by-case basis. Hydraulic Project Approval (HPA) - The Sponsor or contractor will be required to get an HPA for construction activities off the federal reservation for habitat work below the ordinary high water mark.

- **Washington Department of Ecology**

Clean Water Act Section 401 Water Quality Certification. Water quality certification from the Washington Department of Ecology was obtained in 2002 for Phase 1 of project construction. Additional consultation with Ecology may be required depending on subsequent changes made to the design.

Clean Water Act Section 402 National Pollutant Discharge Elimination System (NPDES). The Corps will apply for General Permit authorization for storm water discharges associated with construction activities.

Coastal Zone Management Act (CZMA) Consistency Evaluation. The Corps developed a CZMA consistency evaluation in June 2002. This was submitted to the Department of Ecology for concurrence. Certification is required for Corps-authorized projects located in any of the 13 coastal counties of Washington State.

- **Washington Office of Archaeology and Historic Preservation**

Section 106 Review - A Corps permit triggers review under Section 106 of the National Historic Preservation Act of 1966. The Act requires that all federal agencies take into account the effect of its actions on historic properties. Seattle District has completed a Memorandum of Agreement (MOA) with the State Office of Historic Preservation (SHPO) regarding the existing project and the AWS Project.

- **King County**

Seattle District will coordinate with King County on construction activities on the federal reservation. The Sponsor or contractor will be responsible for any local permits for activities outside the federal reservation.

- **Burlington Northern Santa Fe Railroad (BNSF)**

Easement/Permit - Approval would be required from BNSF for project features within their right-of-way.

Additional discussion of the AWS Project status for Environmental Compliance is included in Chapter 18.

16.3 ENDANGERED SPECIES ACT

16.3.1 Programmatic Biological Assessment

The Corps, as an agency of the federal government, is required under Section 7 of the Endangered Species Act (ESA) of 1973 to ensure its actions do not jeopardize the continued existence of threatened or endangered species, or result in the destruction or adverse modification of critical habitat for listed species. If the Corps finds that a proposed action may affect a listed species or its critical habitat, it is obligated to consult with the NMFS or the USFWS.

In April 2000, Seattle District prepared and submitted a Programmatic Biological Assessment (PBA) to facilitate formal consultation with the NMFS and the USFWS (collectively called the Services) to address impacts on selected listed species from HHD Continued Operation and Maintenance (O&M) and implementation of Phase I[5] of the Additional Water Storage Project. Based on the information presented in the PBA, the Services each prepared a Biological Opinion (BO) in October 2000 to assess whether the effects would result in jeopardy to the listed species or adverse modification of habitat. An Incidental Take Statement (ITS) specifying the level of impact that would occur was also issued. The BO outlined reasonable and prudent measures considered necessary to minimize the impact and terms and conditions considered necessary by the Services.

Additional discussion of the PBA submittal and effects findings is included in Chapter 18.

[5] Phase II actions are not covered in the PBA or the DDR. The acceptance of the Phase II storage by the MIT and resource agencies would be based on the successful performance of Phase I, as determined through the Phase I monitoring. The MIT and resource agencies would have the final determination on Phase II of the project.

CHAPTER 17 (CONCRETE MATERIALS INVESTIGATION)

17.1 CONCRETE MATERIALS INVESTIGATION

A total of approximately 20,000 cubic yards of Portland cement concrete (PCC) will be required for the fish facility, intake tower and tunnel facility. Material requirements, soucrce considerations and recommendations for the PCC is presented in appendix N.

CHAPTER 18 ENVIRONMENTAL DOCUMENTATION

18.1 ENVIRONMENTAL COMPLIANCE

Table 18-1 lists the current status of the Howard Hanson Dam (HHD) fish passage facility with respect to required environmental laws and executive orders. In August 1998, a final Feasibility Study and Environmental Impact Statement (EIS) was produced that addressed all applicable laws and statutes to the level possible for a feasibility level design. In many cases, this was sufficient to be fully compliant with the applicable law. In other cases, additional design information was necessary in order to become fully compliant. For example, full compliance with Clean Water Act (CWA) requirements could not be obtained until further design and construction information was developed. Activities to meet certain cultural resource statutes also are currently in process. Consultations pursuant to the Endangered Species Act (ESA) are also ongoing as construction and scientific studies continue. For compliance activities not fully addressed in the EIS or that are still in process, more detail is provided below.

TABLE 18-1. STATUS OF PROJECT WITH APPLICABLE LAWS AND STATUTES

Federal Statutes	Compliance Status
National Environmental Policy Act of 1969, as amended	August 1998 EIS
Fish and Wildlife Coordination Act, as amended	August 1998 EIS
Clean Air Act of 1977, as amended	August 1998 EIS
Clean Water Act of 1977, as amended	September 2002 WDOE Certification
Coastal Zone Management Act	September 2002 WDOE Determination
Endangered Species Act of 1973, as amended	October 2000 Biological Opinion
Magnuson-Stevens Fishery Conservation and Management Act	October 2000 Biological Opinion
Federal Water Project Recreation Act, as amended	August 1998 EIS
Marine Protection, Research & Sanctuaries Act, as amended	August 1998 EIS
Watershed Protection and Flood Prevention Act, as amended	August 1998 EIS
National Historic Preservation Act of 1966, as amended	In Process
Archaeological and Historic Preservation Act	In Process
Native American Graves Protection and Repatriation Act	In Process

Executive Orders (E.O.)	Compliance Status
Floodplain Management (E.O. 11988)	August 1998 EIS
Protection of Wetlands (E.O. 11990)	August 1998 EIS
Environmental Justice (E.O. 12898)	August 1998 EIS
Protection and Enhancement of the Cultural Environment (E.O. 11593)	In Process
Indian Sacred Sites (E.O. 13007)	In Process

18.2 ARCHAEOLOGICAL AND HISTORIC RESOURCES

Section 106 of the National Historic Preservation Act of 1966, as amended (NHPA), requires that Federal agencies identify historic properties and assess the effects of Federal undertakings on any identified properties and to consult with others to find acceptable ways to resolve adverse effects. Properties protected under Section 106 are those that are listed on or eligible for listing on the National Register of Historic Places. A Corps archaeologist has determined that work at the actual construction site at the dam has no potential to effect historic properties due to the disturbed nature of the construction area. NHPA compliance for the fish passage facility consisted of background research and field surveys of the 6-mile disposal site and the water quality sedimentation ponds. Both surveys were completed with negative results. The report on the archaeological surveys for the fish passage facility will be prepared and submitted to the SHPO with a letter requesting concurrence with a determination of no historic properties affected. A copy of the report will also be sent to the Muckleshoot Tribe.

18.3 CLEAN WATER ACT

The Federal Water Pollution Control Act (33 U.S.C. 1251 et seq.) is more commonly referred to as the Clean Water Act (CWA). This act is the primary legislative vehicle for Federal water pollution control programs and the basic structure for regulating discharges of pollutants into waters of the United States. The CWA was established to "restore and maintain the chemical, physical, and biological integrity of the nation's waters." The CWA sets goals to eliminate discharges of pollutants into navigable waters, protect fish and wildlife, and prohibit the discharge of toxic pollutants in quantities that could adversely affect the environment.

Substantive compliance with requirements of Section 404 (b)(1) of the CWA and Section 10 of the Rivers and Harbors Act were addressed in 2002. Certain sections of the CWA are administered by the individual states. In 2002, a state water quality certification was obtained from the Washington Department of Ecology (WDOE). The state certified the project was compliant with Sections 301, 302, 303, 306, and 307 of the CWA. Additional coordination with WDOE will be required throughout the duration of project construction in order to meet conditions of the water quality certification.

18.4 ENDANGERED SPECIES ACT

The ESA (16 U.S.C. 1531-1544) establishes a national program for the conservation of threatened and endangered species of fish, wildlife, and plants and the habitat upon which they depend. Section 7(a) of the ESA requires that Federal agencies consult with the USFWS and NOAA Fisheries, as appropriate, to ensure that their actions are not likely to jeopardize the continued existence of endangered or threatened species or to adversely modify or destroy their critical habitats. The Corps, as an agency of the federal government, is required under Section 7 of the Endangered Species Act (ESA) of 1973 to ensure its actions do not jeopardize the

continued existence of threatened or endangered species, or result in the destruction or adverse modification of critical habitat for listed species. If the Corps finds that a proposed action may affect a listed species or its critical habitat, it is obligated to consult with the NMFS or the USFWS.

Since the Additional Water Storage Project Feasibility Report was published and approved, Puget Sound Chinook salmon and bull trout were each listed as threatened species under the ESA. In 2000, Seattle District prepared and submitted a Programmatic Biological Assessment (PBA) to facilitate formal consultation with the NMFS and the USFWS (collectively called the Services) to address impacts on selected listed species from Howard Hanson Dam Continued Operation and Maintenance and implementation of Phase I of the Additional Water Storage Project. The Services each prepared a Biological Opinion (BO) to assess whether the effects would result in jeopardy to the listed species or adverse modification of habitat. This included an Incidental Take Statement specifying the level of impact that would occur and reasonable and prudent measures considered necessary to minimize the impact.

The PBA covered two species of fish, three species of birds, and three species of mammals that are known to occur in the vicinity of HHD or could potentially occur there in the future. Six of the species are listed as *threatened*, one is listed as *endangered*, and one is proposed for listing as *threatened*. NMFS determined that the operation and maintenance of HHD and development and implementation of the AWS Project is not likely to jeopardize the continued existence of Green River Chinook salmon or result in the destruction or adverse modification of critical habitat. Similarly, USFWS determined that the proposed action is not likely to jeopardize the continued existence of the bull trout. The Services indicated that the collection of conservation measures, specifically the fish passage facility and habitat improvements described in the original project EIS and in the subsequent BA reverse or offset any adverse effects to Chinook salmon and bull trout resulting from the proposed action.

In 2007, Puget Sound steelhead was listed as a threatened species under the ESA. Puget Sound Chinook salmon and bull trout critical habitat was established in 2005. Additional consultation with the Services is therefore required to update the BO's to address critical habitat and steelhead. This additional consultation is planned for 2009.

CHAPTER 19 VALUE ENGINEERING

Value engineering will be developed and presented in future submittals.

CHAPTER 20 TECHNICAL REVIEW

20.1 INTERNAL QUALITY CONTROL REVIEW (QC)

Quality Control (QC) for In-house Designs/Investigations/Studies addresses the basic level of technical quality verification for each discipline involved in a design effort as well as total team interdisciplinary coordination. It encompasses such activities as detailed calculation and analysis checks, regulation compliance verification, cross discipline design effort compatibility checks, etc. Resource managers of the pertinent Seattle District sections will conduct the reviews and provide formal, written certification that peer oversight has been accomplished, and all issues have been resolved prior to the award of the construction contract.

20.2 INDEPENDENT TECHNICAL REVIEWS (ITR):

A review will be accomplished by an Independent Technical Review (ITR) team in accordance with Engineering Regulation ER 1110-2-1150. Members of the team were selected by their reputation in their field of expertise and for their potential for unbiased critique of the project. Team members will provide formal, written certification that all appropriate comments within their field of expertise have been considered and incorporated in the design documents prior to award of the construction contract.

20.3 BIDDABILITY, CONSTRUCTIBILITY, OPERABILITY AND ENVIRONMENTAL (BCOE) REVIEW

Biddability, Constructibility, Operability and Environmental (BCOE) reviews are required by ER 415-1-11. BCOE and functional reviews of project design documents will be conducted by Seattle District Engineering and Construction Division personnel and project customer(s). As required by ER 415-1-11, Engineering and Construction Division personnel will provide formal, written certification that all appropriate BCOE comments have been considered and incorporated in the design documents prior to award of the construction contract.

There will be four formal presentations of the design documents, of which this document is the first: 35 percent, 65 percent, Final and Corrected Final. All four of these stages of design documentation will be accomplished prior to advertising the project. Comments will be collected and processed using the DRCHECKS automated review system.

CHAPTER 21 OUTLINE SPECS

DIVISION 1 FRONTS

Section	Title
01001	Supplementary Requirements
01005	Site Specific Supplementary Requirements
01025	Measurement and Payment
01030	Diving (I think there will still be some if the guide wall is in this contract)
01035	Modification Procedures
01050	Emergency Demobilization
01060	Water Quality Standards
01061	Environmental Protection
01100	Environmental Management
01312	Quality Control Systems (QCS)
01320	Project Schedule
01330	Submittal Procedures
01355A	Environmental Protection
01356A	Storm Water Pollution Prevention Measures
01451	Contractor Quality Control
01501	Construction Facilities and Temporary Controls
01560	Diversion and Care of Water
01561	Dust Control
01565	Construction Spoils Handling
01572	Construction and Demolition Waste Management
01670	Recycled/Recovered Materials
01702	As Built Records and Drawings
01703	Warranty of Construction

DIVISION 2 SITEWORK

Section Title

02212 Controlled Blasting

Covers the use of explosives in drill-and-blast operations for all work (e.g., FPF excavation, AWC tunneling, PAT tunneling) involving the excavation of rock for construction of the Juvenile Fish Passage Facility. Work covered in this section includes pre-blast inspections, blast design which includes evaluating the existing nearby structures, blast limitations, materials, equipment, labor and supervision for the transportation and storage of explosives, drilling and loading of blast holes, protection of existing facilities, test blasts, blast-effects monitoring, post-blast inspections and damage repairs.

02214 Geotechnical Instrumentation

Includes furnishing, installing and maintaining the geotechnical instrumentation; and protecting the instrumentation (both that installed by the Contractor, previous contractors and the Contracting Officer) from damage. It also includes additional instrumentation that the Contractor deems necessary to ensure the safety of personnel and the Work. The Contractor shall be required to implement required remedial and precautionary measures based on the instrumentation data. Instrumentation threshold and limiting response values are provided.

02217 Foundation Preparation
Procedures and requirements for dry and underwater foundation cleanup. Provision is made for the contractor to provide access for USACE geologist to map the foundation after cleanup and prior to concrete placement.

02220 Demolition
Procedures and requirements for demolition of concrete in the outlet tunnel at the AWC portal and within the Intake structure at the PAT portal.

02231 Clearing and Grubbing
Procedures and requirements for removal of brush and trees.

02251 Foundation Drilling and Grouting
Includes materials and methods for foundation grouting. Area to be grouted include the rock pillar between the FPF excavation and the outlet tunnel.

02251a Tunnel and Shaft Grouting
Includes materials and methods for tunnel grouting. Areas to be grouted include the outlet tunnel and PAT.

02330 Embankment for Earth Dams
May or may not apply to fill pad around the FPF.

02300 Earthwork
02316A _____
02371A Excavation, Trenching, and Backfilling for Utilities Systems Wire Mesh Gabions
02380A Stone, Channel, Shoreline/Coastal Protection for Structures
02490 Soil and Rock Anchors
Covers materials, installation and test methods for structural anchors.

02491 Un-tensioned Rock Dowels
Covers materials, installation and test methods for un-tensioned rock dowels. Rock dowels will be used for excavation, tunnel and outlet tunnel AWC portal stabilization.

02510A Water Distribution System
02525 Water Wells
Covers maintenance of previously installed water wells and pumps and decommissioning of these wells when construction is complete. Installation and testing requirements for replacing contractor damaged or destroyed wells also included.

02525 Relief Wells
Covers maintenance of previously installed relief wells downstream of the cofferdam and decommissioning prior to concrete placement. Installation and testing requirements for replacing contractor damaged or destroyed wells will also be included.

02531 Sanitary Sewers
02532A Force Mains and Inverted Siphons; Sewer
02630 Storm Drainage
02731A Aggregate Surface Course
02754A Concrete Pavements for Small Projects
02763A Pavement Markings
02821A Fencing
02921 Seeding

This section will be needed if any areas require re-vegetation.

DIVISION 3 CONCRETE

Section	Title
03330	Cast-In-Place Architectural Concrete
03300A	Cast-in-place Structural Concrete
03371	Shotcrete

OTHER

Section	Title
04200	Masonry
05500	Miscellaneous Metal
05502A	Metals: Miscellaneous, Standard Articles, Shop Fabricated Items
07132	Bituminous Waterproofing
07210	Building Insulation
07220	Roof and Deck Insulation
07530	Ethylene Propylene Diene Monomer (EPDM) Roof Membrane
07600	Flashing and Sheet Metal
07840	Firestopping
07920	Joint Sealants
08110	Steel Doors and Frames
08392	Airtight & Watertight Doors (no UFGS)
08500	Watertight Windows (no UFGS)
08520N	Aluminum Windows
08710	Door Hardware
08800	Glazing
09100	Metal Support Assemblies
09250	Gypsum Board
09900	Paints & Coatings
10440	Interior Signage

DEBRIS BOOM

Section	Title
02231	Clearing and Grubbing
02251A	Foundation Drilling and Grouting
02301N	Earthwork for Structures and Pavements
02315N	Excavation and Fill
02490	Soil and Rock Anchors
09971	Exterior Coating of Steel Structures
09967N	Coating of Steel Waterfront Structures
16370A	Electrical Distribution System, Aerial

MECHANICAL

Section	Title
11211A	Pumps: Water, Centrifugal Aug 03
11287	Radial Gate and Anchorages
11288	Emergency Gate and Anchorages
11310	Oil Water Separator (Exterior Unit)
11311	Oil Water Separator (Interior Unit) Feb 2002
11312	Packaged Lifting Stations, Wet Well Type
13110A	Cathodic Protection System (Sacrificial Anode)
13209	Water Storage Steel Tanks
13402	Welding Pressure Piping
13405	Process Control Jan 2003
14211A	Elevators, Electric, For Civil Works Jan 1994
14602A	Cranes, Single-Girder Bridge, Monorail and JIB Nov 2002
14630A	Bridge Cranes, Overhead Electric, Under Running
15010A	Hydraulic Power Systems for Civil Works Dec 2001
15015	Hydraulic Power Systems for Submerged Fish Passage Equipment
15070A	Seismic Protection for Mechanical Equipment Jan 2002
15080A	Thermal Insulation for Mechanical Systems July 2002
15110	Control Valves, Self Contained Diaphragm
15200A	Pipelines, Liquid Process Piping Mar 2002
15211N	Low Pressure Compressed Air Piping (Non-Breathable) Aug 03
15217N	Breathing Air Piping & Equipment
15400	Plumbing, General Purpose (and compressed air) Sept 2003
15445S	Sump Pumps
15446	Dogging Device
15760	Unitary Heating Equipment
15810N	Ductwork and Ductwork Accessories Aug 2003
15895A	Air Supply, Distribution, Ventilation, and Exhaust Feb 2003
15951A	Direct Digital Control for HVAC Dec 2001
15951N	Testing Industrial Ventilation Systems Sept 1999
15990A	Testing, Adjusting, and Balancing of HVAC Systems June 2003
15995A	Commissioning of HVAC Systems July 2003

ELECTRICAL

Section	Title
13110	Cathodic Protection System (Sacrificial Anode)
16070	Seismic Protection for Electrical Equipment
16222	Electric Generator, 3-Phase Vertical Synchronous Type
16264	Diesel-Generator Set, Stationary15-300KW, Standby Applications
16300	Electric Controls*
16375	Electrical Distribution System, Underground
16402	Interior Distribution System
16410	Automatic Transfer Switch and By-Pass/Isolation Switch
16510	Interior Lighting
16520	Exterior Lighting

16528 Exterior Lighting including Security and CCTV Applications
16710 Building Telecommunications Cabling System
16711 Telephone System, Outside Plant
16751 Closed Circuit Television Systems

*Section 16300, Electrical Controls, could be replaced with Section 13405, Process Control, or similar since it is more than just electrical. Section 13405 has data relevant for the PLC, sensors, etc., that could be used to develop specifications for this project.

Howard A. Hanson Dam
Additional Water Storage Project

Section 902 Post Authorization Change Validation Study – Fish Passage

King County, Washington

APPENDIX B-11

2008 95% DRAWING SET

Final Integrated Validation Report and

Supplemental Environmental Impact Statement

US Army Corps of Engineers
Seattle District

TACOMA POWER
TACOMA WATER
TACOMA RAIL
TACOMA PUBLIC UTILITIES

US Army Corps
of Engineers
Seattle District

95% TEAM COORINATION
HOWARD HANSON DAM
ADDITIONAL WATER STORAGE PROJECT
FISH PASSAGE FACILITY
GREEN RIVER, WASHINGTON

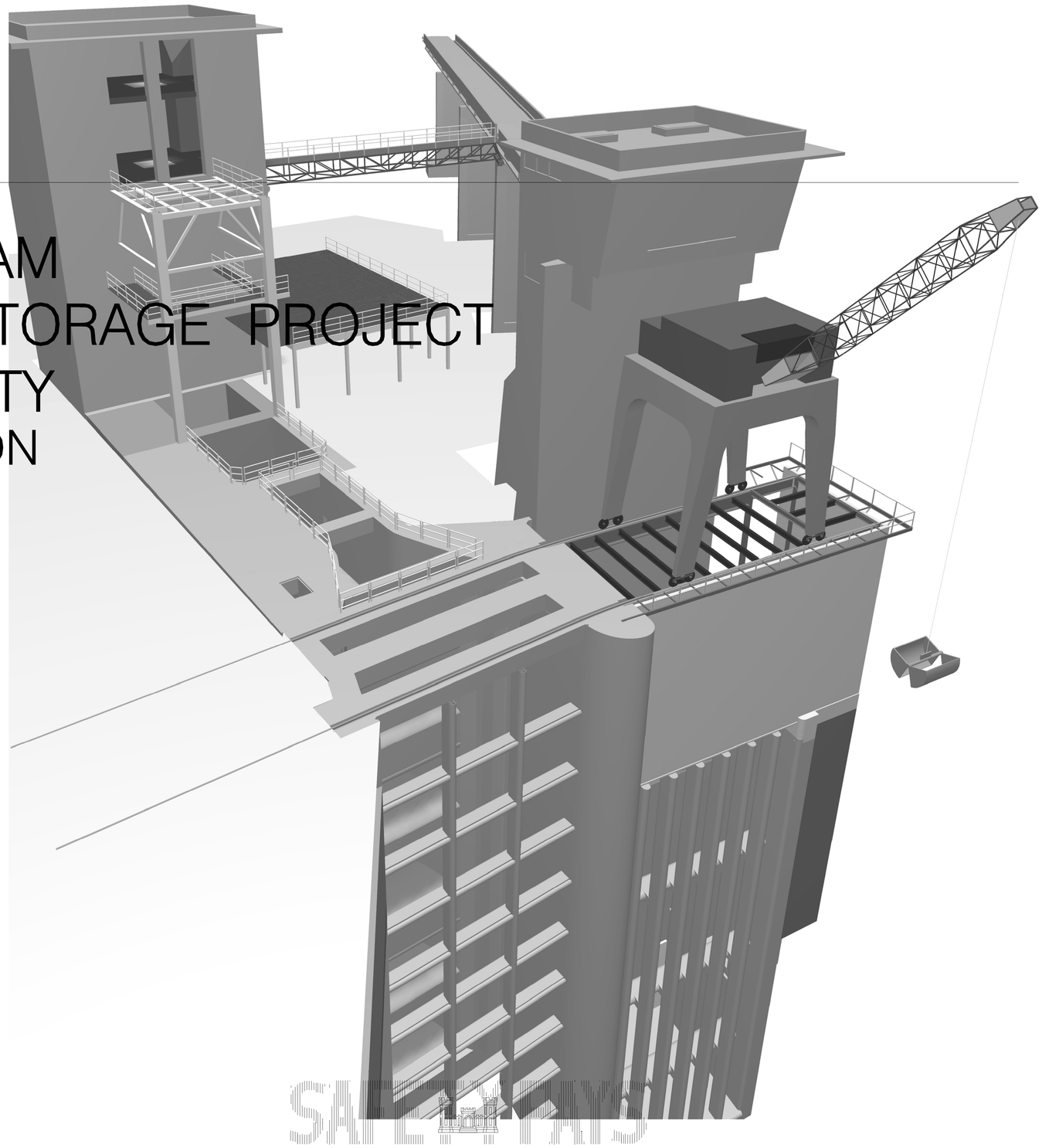

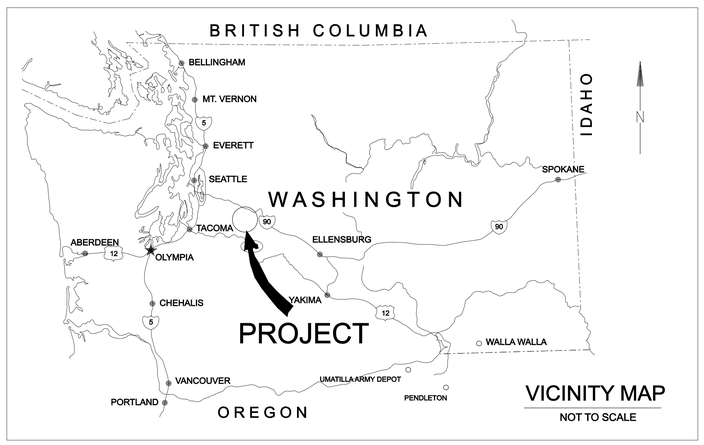

VICINITY MAP
NOT TO SCALE

AUG 2008 TEAM COORDINATION REVIEW

US Army Corps
of Engineers
Seattle District

Symbol	Description	Appr.	Symbol	Date	Description
				/ /	

Designed by: X
Drawn by: X
Checked by: X

Date: 16 MAR 06
File: E-56-14-19
Rev.

U.S.ARMY ENGINEER DISTRICT,SEATTLE
CORPS OF ENGINEERS
SEATTLE, WASHINGTON
Prepared by:

ADDITIONAL WATER STORAGE PROJECT
HOWARD HANSON DAM
TITLE AND AREA MAP
GREEN RIVER WASHINGTON

Plate number:
G-001
Sheet of

DATE AND TIME PLOTTED: 8/7/2008 7:18:38 AM DESIGN FILE: I:\AE\DESIGNS\HHAWG-001CVR.DGN

DRAWING INDEX

SHEET	PLATE	TITLE
GENERAL		
	G-001	G-001 TITLE AND AREA MAPS
	G-0G	G-002 DRAWING INDEX, ABBREVIATIONS, & LEGEND
CIVIL		
	C-001	SYMBOLS, ABBREVIATIONS, & GENERAL NOTES
	C-002	GENERAL SITE PLAN
	C-003	EXISTING SITE CONDITIONS
	C-004	DEMOLITION PLAN
	C-005	SITE PLAN 1
	C-006	SITE PLAN 2
	C-007	SITE PLAN 3
	C-	GRADING PLAN 1
	C-008	GRADING PLAN 2
	C-009	CONCRETE JOINT PLAN 1
	C-010	CONCRETE JOINT PLAN 2
	C-011	CONCRETE JOINT LEGEND AND DETAILS
	C-1C-	SITE PLAN 7 FISH TRUCK RAMP
	C-201	ROADWAY PROFILES
	C-201	UTILITY PROFILES AND DETAILS
	C-303	UTILITY PLAN
	C-303	ACCESS ROAD 1 CROSS SECTIONS
	CU101	ACCESS RD 2 CROSS SECTIONS
LANDSCAPE		
	L-101	L-1 LANDSCAPE PLAN 1
	L-102	L-2 LANDSCAPE PLAN 2
	L-103	L-3 LANDSCAPE PLAN 3
STRUCTURAL		
	S-001	S-001 STRUCTURAL NOTES
	S-002	S-002 STRUCTURAL LEGEND
	S-003	S-003 GENERAL PLAN FISH PASSAGE FACILITY
	S-004	S-004 OVERALL FACILITY PLAN
	S-005	S-005 FACILITY SECTION
	S-010	S-010 COLLECTOR PLAN EL 1061.5 - FLOOR *4
	S-011	S-011 COLLECTOR PLAN EL 1074.13 - FLOOR *5
	S-012	S-012 COLLECTOR PLAN AT HORN
	S-013	S-013 COLLECTOR PLAN EL 1096.09
	S-014	S-014 COLLECTOR PLAN EL 1140.01
	S-016	S-016 COLLECTOR DETAILS
	S-019	S-019 TYPICAL COLLECTOR WALL REINFORCING
	S-020	S-020 TYPICAL COLLECTOR REINFORCING I
	S-021	S-021 COLLECTOR 1& 2 REINFORCING
	S-022	S-022 COLLECTOR 3 4 5 REINFORCING
	S-023	S-023 GALLERY REINFORCING I
	S-024	S-024 GALLERY REINFORCING II
	S-025	S-025 COLLECTOR SECTIONS AND DETAILS
	S-027	S-027 COLLECTOR ELEVATION @ STA 3+51.75
	S-029	S-029 COLLECTOR SECTION @ STA 3+88.45 - I
	S-030	S-030 COLLECTOR SECTION @ 3.88.45 - II
	S-031	S-031 COLLECTOR SECTION @ 3.88.45 - III
	S-034	S-034 WET WELL/FISH WELL PLAN EL 1029
	S-035	S-035 WET WELL/FISH WELL PLAN @ EL 1042.0
	S-036	S-036 WET WELL/FISH WELL @ PLAN EL 1061.53
	S-037	S-037 WET WELL/FISH WELL @ PLAN EL 1096.1
	S-038	S-038 WET WELL/FISH WELL PLAN @ EL 1140.0
	S-039	S-039 WET WELL/FISH WELL PLAN @ EL 1163.4
	S-040	S-040 WET WELL - FISH WELL REINFORCING @ AWC
	S-044	S-044 WET WELL SECT @ 4+11 REINF - I
	S-045	S-045 WET WELL SECT @ 4+11.0 REINF - II
	S-046	S-046 WET WELL SECT 4+11.0 REINF - III
	S-047	S-047 WET WELL SECT @ STA 4+11.0 REINF -IV
	S-048	S-048 FISH WELL SECT @ STA 4+34
	S-050	S-050 TOWER PLAN EL 1029
	S-051	S-051 TOWER PLANS EL 1042.0
	S-052	S-052 TOWER PLAN EL 1061.50
	S-053	S-053 TOWER PLAN EL 1074.13
	S-054	S-054 TOWER PLAN @ 6TH & 7TH FLOORS
	S-055	S-055 TOWER PLAN EL 1140.0, 1163.4
	S-056	S-056 TOWER PLAN EL 1181.0, 1194.0 & 1204.0
	S-057	S-057 TANSV TOWER SECT @ 4+52
	S-058	S-058 TOWER SECTION II@4+52
	S-059	S-059 GATE CHAMBER PROFILE
	S-060	S-060 RADIAL GATE CHAMBER SECTIONS & DETAILS
	S-061	S-061 TOWER REINFORCING EL 1029.0
	S-062	S-062 TOWER REINFORCING @ ELS 1042, 1054, 1061.53 & 1074.13
	S-063	S-063 TOWER REINFORCING ELS 1083.5, 1096.1 & 1118
	S-064	S-064 TOWER REINFORCING @ EL 1140.0 & EL 1163.38
	S-065	S-065 TOWER REINFORCING EL 1245, EL 1257
	S-066	S-066 TOWER PLANS EL 1216.0 & 1228.0
	S-067	S-067 TOWER PLANS EL 1245.0 & ROOF PLAN
	S-068	S-068 RADIAL GATE CYLINDER SUPPORT DETAILS
	S-070	S-070 TOWER SLAB REINFORCING PLANS
	S-071	S-071 SLAB REINFORCING PLANS II
	S-074	S-074 TOWER & AWC TUNNEL PLAN EL 1029
	S-075	S-075 TUNNEL AWC SECTIONS & DETAILS
	S-088	S-088 FISH WELL COVER PLATES
	S-089	S-089 FISH WELL COVER PLATE DETAILS
	S-090	S-090 FISH BYPASS PIPE PLAN, SECTIONS & DETAILS
	S-091	S-091 BYPASS PIPE DETAILS
	S-100	S-100 DEBRIS BOOM PLAN
	S-101	S-101 WEST ANCHOR - DEBRIS BOOM
	S-102	S-102 EAST ANCHOR - DEBRIS BOOM
	S-103	S-103 DEBRIS BOOM DETAILS
	S-104	S-104 DEBRIS GATE BOOM ASSEMBLY
	S-105	S-105 DEBRIS GATE BOOM WELDMENTS
	S-106	S-106 DEBRIS GATE BOOM DETAILS
	S-120	S-120 IFS HYDRAULIC CYLINDER BLOCKOUT PLAN & DETAILS
	S-121	S-121 INCLINED FISH SCREEN PLAN, SECTIONS AND DETAILS
	S-122	S-122 INCLINED FISH SCREEN PLAN 2
	S-123	S-123 INCLINED FISH SCREEN DETAILS
	S-124	S-124 INCLINED FISH SCREEN DETAILS

SHEET	PLATE	TITLE
STRUCTURAL CONT.		
	S-125	S-125 MITER GATE DETAILS I
	S-126	S-126 MITER GATE SECTIONS & DETAILS
	S-129	S-129 DEWATERING BULKHEAD DEMOLITION PLAN
	S-130	S-130 GANTRY CRANE RAIL LAYOUT PLAN
	S-131	S-131 1140 DECK EXTENSION PLANS & SECTION
	S-132	S-132 DECK PLAN SECTIONS & DETAILS
	S-133	S-133 GANTRY CRANE SUPPORT STRUCTURE PLAN
	S-134	S-134 GANTRY CRANE FRAMING DETAILS 1
	S-135	S-135 GANTRY CRANE FRAMING DETAILS II
	S-136	S-136 GANTRY CRANE FRAMING DETAILS III
	S-137	S-137 GANTRY CRANE FRAMING DETAILS II
	S-138	S-138 GANTRY CRANE FRAMING DETAILS III
	S-139	S-139 PRECAST PANEL DETAILS
	S-140	S-140 MISC FRAMING DETAILS
	S-141	S-141 PEDESTRIAN BRIDGE HANDRAIL LAYOUT
	S-142	S-142 PEDESTRIAN BRIDGE RAILING DETAILS
	S-143	S-143 PEDESTRIAN BRIDGE PLAN, ELEVATION & SECTIONS
	S-144	S-144 PEDESTRIAN BRIDGE DETAILS
	S-150	S-150 TRACHRACK GRILL DETAILS
	S-160	S-160 DOGGING DEVICE RELOCATION FRAMING SECTIONS AND DETAILS
	S-161	S-161 DOGGING DEVICE RELOCATION SUPPORT DETAILS
	S-202	S-202 WATERSTOP LOCATIONS PLANS & DETAILS
	S-203	S-203 WATERSTOP DETAILS
	S-204	S-204 STEEL STAIR DETAILS
	S-205	S-205 PLATFORM DETAILS
	S-206	S-206 SHIP LADDER TYPICAL DETAILS
	S-207	S-207 FISH WELL DRAIN SCREEN FRAMING DETAILS
	S-253	S-253 FLOOD RETAINING WALL ADDITION
	S-254	S-254 FLOOD RETAINING WALL DETAILS
	S-255	S-255 GUIDE WALL PLAN
	S-256	S-256 GUIDE WALL SECTIONS 1
	S-257	S-257 GUIDE WALL SECTIONS 2
	S-258	S-258 GUIDE WALL REINFORCEMENT 1
	S-259	S-259 GUIDE WALL REINFORCEMENT 2
	S-260	S-260 GUIDE WALL SECTIONS & DETAILS
	S-261	S-261 GUIDE WALL JOINT DETAILS
ARCHITECTURAL		
	A-001	ABBREVIATIONS AND NOTES
	A-002	LIFE SAFETY SUMMARY
	A-101	1ST FLOOR PLAN EL: 1029.00'
	A-102	2ND FLOOR PLAN EL 1042.00'
	A-104	4TH FLOOR PLAN EL: 1061.53'
	A-105	5TH FLOOR PLAN EL: 1074.13'
	A-106	6TH FLOOR PLAN EL:1096.09'
	A-107	7TH FLOOR PLAN EL: 1118.05'
	A-108	8TH FLOOR PLAN EL:1140.01
	A-109	9TH FLOOR PLAN EL: 1163.38'
	A-110	10TH FLOOR PLAN EL:1181.00
	A-111	11TH & 12TH FLOOR PLANS EL: 1194.00' & EL 1204.00'
	A-112	13TH & 14TH FLOOR PLAN EL 1216.00 & EL 1228.00
	A-113	15TH FLR & ROOF EL 1245.00 & 1257.00
	A-201	EXTERIOR ELEVATIONS
	A-301	FACILITY SECTION A
	A-302	FACILITY SECTION B
	A-303	ELEVATOR SHAFT SECTION
	A-401	ENLARGED PLANS & ELEVATIONS
	A-500	STAIR SECTION & DETAILS
	A-501	STAIR SECTION & DETAILS
	A-502	STAIR SECTION & DETAILS
	A-503	EXTERIOR & ROOF DETAILS
	A-504	DOOR & WINDOW DETAILS I
	A-505	DOOR & WINDOW DETAILS II
	A-506	INTERIOR DETAILS
	A-601	FINISH SCHEDULES I
	A-602	WALL TYPE SCHEDULE
	A-603	DOOR SCHEDULE
	A-604	SIGNAGE SCHEDULE
PLUMBING		
	P-001	P-001 PLUMBING DEGEND & ABBREVIATIONS
	P-002	P-002 PLUMBING EQUIPMENT LAYOUT
	P-003	P-003 RIVER WATER PIPING ISOMETRIC
	P-004	P-004 PUMPED RIVER WATER ISOMETRIC
	P-005	P-005 STATION DRAINAGE ISOMETRIC
	P-006	P-006 COMPRESSED AIR ISOMETRIC
	P-007	P-007 PUMPED DOMESTIC WATER & SEWER ISOMETRIC
	P-101	P-101 PLUMBING PLAN EL 1029
	P-102	P-102 PLUMBING PLAN EL 1042
	P-103	P-103 PLUMBING PLAN EL 1061.5
	P-104	P-104 PLUMBING PLAN EL 1074
	P-105	P-105 PLUMBING PLAN EL 1096
	P-106	P-106 PLUMBING PLAN EL 1118
	P-107	P-107 PLUMBING PLAN EL 1140
	P-108	P-108 PLUMBING PLAN EL 1163
	P-109	P-109 PLUMBING PLAN EL 1181
	P-110	P-110 PLUMBING PLAN EL 1194
	P-111	P-111 PLUMBING PLAN EL 1204
	P-112	P-112 PLUMBING PLAN EL 1216, 1229
	P-113	P-113 PLUMBING PLAN EL 1245, 1257
	P-301	P-301 PLUMBING GALLERY PROFILE I
	P-302	P-302 PLUMBING GALLERY PROFILE II
	P-303	P-303 FISH WELL PIPING ELEVATION
	P-304	P-304 GALLERY PIPING ELEVATIONS
	P-305	P-305 PIPING SECTIONS 1
	P-306	P-306 PIPING SECTIONS 2
	P-307	P-307 PIPING SECTIONS 3
	P-308	P-308 PRESSURE SENSOR PIPING ELEVATION
	P-309	P-309 GALLERY PIPING ELEVATION
	P-311	P-311 PLUMBING CENTERLINE PROFILE I
	P-312	P-312 PLUMBING CENTERLINE PROFILE II

SHEET	PLATE	TITLE
PLUMBING CONT.		
	P-401	P-401 ENLARGED TOILET ROOM PLAN
	P-402	P-402 ENLARGED EL 1042 PIPING PLAN
	P-403	P-403 ENLARGED EL 1061.5 & 1074 PIPING PLANS
	P-501	P-501 PLUMBING DETAILS I
	P-502	P-502 PLUMBING DETAILS II
	P-503	P-503 PLUMBING DETAILS III
	P-504	P-504 PLUMBING DETAILS IV
	P-601	P-601 PLUMBING SCHEDULES I
	P-602	P-602 PLUMBING SCHEDULES II
	P-755	MISC CONTROLS
MECHANICAL		
	M-001	M-001 LEGEND & ABBREVIATIONS
	M-002	M-002 FPF EQUIPMENT LAYOUT
	M-003	M-003 AWC HYDRAULIC PIPING ISOMETRIC
	M-101	M-101 MECHANICAL PLAN EL 1029
	M-102	M-102 MECHANICAL PLAN EL 1042
	M-103	M-103 MECHANICAL PLAN EL 1061.5
	M-104	M-104 MECHANICAL PLAN EL 1074
	M-105	M-105 MECHANICAL PLAN EL 1096
	M-106	M-106 MECHANICAL PLAN EL 1118
	M-107	M-107 MECHANICAL PLAN EL 1140
	M-108	M-108 MECHANICAL PLAN EL 1163
	M-109	M-109 MECHANICAL PLAN EL 1181
	M-110	M-110 MECHANICAL PLAN EL 1194
	M-111	M-111 MECHANICAL PLAN EL 1204
	M-112	M-112 MECHANICAL PLAN EL 1216, 1228
	M-113	M-113 MECHANICAL PLAN EL 1245, 1257
	M-150	M-150 DOGGING ROOM MECH PLAN
	M-301	M-301 MECH GALLERY PROFILE I
	M-302	M-302 MECH GALLERY PROFILE II
	M-303	M-303 SECTIONS THROUGH FISH COLLECTOR EQUIPMENT
	M-304	M-304 ELEVATION THROUGH FISH COLLECTORS 3 & 4
	M-309	M-309 AWC GATE ELEVATION "A-A"
	M-310	M-310 AWC GATE SECTIONS
	M-313	M-311 MECH CENTERLINE PROFILE I
	M-314	M-312 MECH CENTERLINE PROFILE II
	M-332	M-330 GANTRY CRANE ELEVATIONS
	M-351	M-351 ELEVATOR HOISTWAY SECTION
	M-353	M-350 MECHANICAL RM SECTIONS
	M-355	M-352 MISC HVAC SECTIONS I
	M-356	M-353 MISC HVAC SECTIONS II
	M-401	M-401 AWC GATE PLAN EL 1029.0
	M-402	M-402 AWC GATE PLAN EL 1042.0
	M-404	M-404 ENLARGED MECH & ELEC RM PLANS
	M-405	M-405 ENLARGED ELEV & HOISTWAY PLAN
	M-410	M-410 TYPICAL FISH COLLECTOR EQUIPMENT PLAN
	M-501	M-501 IFS VIEWS
	M-502	M-502 MITER GATE VIEWS
	M-503	M-503 FISH WELL PORT VIEWS
	M-504	M-504 AWC GATE DETAILS
	M-510	M-510 IFS DETAILS 1
	M-516	M-516 MITER GATE DETAILS
	M-522	M-522 IFS ACTUATOR HYDRAULIC SCHEMATIC
	M-523	M-523 IFS ACTUATOR HYDRAULIC SCHEDULE
	M-532	M-532 MITER GATE ACTUATORS HYDRAULIC SCHEMATIC
	M-533	M-533 MITER GATE ACTUATORS HYDRAULIC SCHEDULE
	M-542	M-542 BYPASS PORT VALVES HYDRAULIC SCHEMATIC
	M-550	M-550 INSTRUMENTATION DETAILS
	M-560	M-560 HVAC SCHEMATIC
	M-561	M-561 AWC GATES HYDRAULIC SCHEMATIC
	M-590	M-590 MISC CRANE DETAILS I
	M-591	M-591 MISC CRANE DETAILS II
	M-592	M-592 STOPLOG STORAGE DETAILS I
	M-593	M-593 STOPLOG STORAGE DETAILS II
	M-595	M-595 MISC DETAILS I
	M-596	M-596 MISC DETAILS II
	M-598	M-598 DOGGING DEVICE DETAILS I
	M-599	M-599 DOGGING DEVICE DETAILS II
	M-601	M-601 AWC GATE HYDRAULIC SYSTEM SCHEDULES I
	M-602	M-602 AWC GATE HYDRAULIC SYSTEM SCHEDULES II
	M-603	M-603 HVAC SYSTEM SCHEDULES I
	M-604	M-604 HVAC SYSTEM SCHEDULES II
	M-605	M-605 INSTRUMENTATION SCHEDULES
	M-606	M-606 MISCELLANEOUS SCHEDULES
	M-701	M-701 FISH PASSAGE FACILITY FLOW SCHEMATIC 1
	M-755	M-755 MISC CONTROLS I
	M-756	M-756 MISC CONTROLS II
	M-760	AHU CONTROL SCHEMATIC
ELECTRICAL		
	E-001	E-001 LEGEND AND ABBREVIATIONS
	E-002	E-002 SITE PLAN
	E-101	E-101 1ST FLOOR PLANS ELEVATION 1029.00'
	E-102	E-102 2ND FLOOR PLANS ELEVATION 1042.00'
	E-104	E-104 4TH FLOOR PLANS ELEVATION 1061.53'
	E-105	E-105 5TH FLOOR POWER PLAN-ELEVATION 1074.13'
	E-106	E-106 5TH FLOOR LIGHTING PLAN ELEVATION 1074.13'
	E-107	E-107 6TH FLOOR PLANS ELEVATION 1096.09'
	E-108	E-108 7TH FLOOR PLANS ELEVATION 1118.05'
	E-109	E-109 8TH FLOOR PLANS ELEVATION 1140.01'
	E-110	E-110 9TH FLOOR PLANS ELEVATION 1163.38'
	E-111	E-111 10TH FLOOR PLANS ELEVATION 1181.00'
	E-112	E-112 11TH AND 12TH FLOOR PLANS FOR ELEVATIONS 1194.00' AND 1204.00'
	E-113	E-113 13TH & 14TH FLOOR PLANS FOR ELEVATIONS 1216.00' & 1228.00'
	E-114	E-114 15TH FLOOR AND ROOF PLANS FOR ELEVATIONS 1245.00' AND 1257.00'
	E-115	DOGGING DEVICE RELOCATION FRAMING SECTION & DETAILS
	E-301	STAIRS & GALLERY LIGHTING PLAN - FACILITIES SECTION B
	E-302	ELEVATOR SHAFT SECTION
	E-501	DETAILS I
	E-502	DETAILS II

SHEET	PLATE	TITLE
ELECTRICAL		
	E-503	DETAILS III
	E-504	DETAILS IV
	E-505	DETAILS V
	E-601	ONE-LINE DIAGRAM
	E-602	PANEL SCHEDULE 1
	E-603	PANEL SCHEDULE 2
	E-604	PANEL SCHEDULE 3
	E-605	PANEL SCHEDULE 4
	E-606	PANEL SCHEDULE 5
FISHPRO DRAWINGS		
	SF1	MONITORING FACILITY GENERAL ARRANGEMENT PLAN
	SF2	MONITORING FACILITY PLAN
	SF3	WORKUP ROOM GENERAL ARRANGEMENT
	SF4	MONITORING FACILITY FOUNDATION PLAN
	SF5	MONITORING FACILITY PARTIAL FRAMING PLAN
	SF6	MONITORING FACILITY FLOOR FRAMING PLAN
	SF7	MONITORING FACILITY CONCRETE FLOOR PLAN
	SF8	MONITORING FACILITY PLATFORM FRAMING PLAN
	SF9	MONITORING FACILITY ROOF FRAMING PLAN
	SF10	MONITORING FACILITY SECTIONS I
	SF11	MONITORING FACILITY SECTIONS II
	SF12	LIFT TOWER FRAMING PLANS I
	SF13	LIFT TOWER FRAMING PLANS II
	SF14	LIFT TOWER ROOF FRAMING PLAN
	SF15	LIFT TOWER ELEVATIONS
	SF16	STRUCTURAL FOUNDATION DETAILS
	SF17	STRUCTURAL FRAMING DETAILS I
	SF18	STRUCTURAL FRAMING DETAILS II
	SF19	STRUCTURAL FRAMING DETAILS III
	SF20	MISCELLANEOUS STRUCTURAL DETAILS I
	SF21	MISCELLANEOUS STRUCTURAL DETAILS II
	SF22	MISCELLANEOUS STRUCTURAL DETAILS III
	SF23	LIFT HOPPER STRUCTURAL PLAN, SECTION AND DETAILS
	SF24	LIFT HOPPER PLAN AND SECTIONS
	SF25	LIFT HOPPER DETAILS
	MF1	TRANSFER/ANESTHESIA TANK PLAN AND SECTIONS
	MF2	WORKUP TABLE PLAN SECTIONS AND DETAILS
	MF3	RECOVERY TANK AND DEWATERING TANK PLAN AND SECTIONS
	MF4	FLUME TANK
	MF5	FLUME PLANS, SECTIONS AND DETAILS
	MF6	DIVERTER GATE PLANS, SECTIONS AND DETAILS
	MF7	LIFT HOPPER DOCKING STATION PLAN SECTIONS AND DETAILS
	MF8	LIFT HOPPER DOCKING STATION AND DETAILS
	MF9	GRADER PLAN, SECTIONS & DETAILS
	MF10	MONITORING FACILITY HOLDING TANK PLAN, AND SECTIONS
	MF11	MONITORING FACILITY HOLDING TANK PLAN,SECTIONS AND DETAILS
	MF12	HOLDING TANK AND TRANSFER TANK GATE SECTIONS AND DETAILS
	MF13	TRUCK TRANSFER HOLDING TANK PLAN, SECTION & DETAILS
	MF14	HOLDING TANK GRADER PLAN, SECTIONS AND DETAILS
	MF15	HOLDING TANK CROWDER DESIGN CRITERIA
	MF16	TRUCK TANK DOCKING STATION PLAN, SECTIONS AND DETAILS
	MF17	WATER CONTROL STRUCTURE PLANS, SECTIONS AND DETAILS
	MF18	MONITORING FACILITIY PUMP VAULT PLANS AND SECTIONS
	MF19	MONITORING FACILITY PROCESS FLOW DIAGRAM
	MF20	MONITORING FACILITY BELOW GRADE PIPING PLAN
	MF21	MONITORING FACILITY BELOW EL 1196 PIPING PLAN
	MF22	MONITORING FACILITY ABOVE EL 1196 PIPING PLAN
	MF23	PIPING SECTIONS
	MF24	PIPING PLANS AND SECTIONS
	MF25	RESERVED
	MF26	COMPRESSED AIR SYSTEM P & ID
	MF27	PIPING SCHEDULE
	MF28	LIFT HOPPER HOST DESIGN CRITERIA
	MF29	MECHANICAL SCHEDULES
	EF1	MONITORING FACILITY POWER PLAN
	EF2	MONITORING FACILTY LIGHTING ZONES AND RECEPTACLES PLAN
	EF3	MONITORING FACILITY INSTRUMENTATION PLAN
	EF4	MONITORING FACILITY ELECTRICAL DETAILS 1

US Army Corps of Engineers
Seattle District

Description	Symbol	Appr.	Date
			/ /

Date: 16 MAR 06
File • E-56-14-19
Rev.
Designed by:
Drawn by:
Checked by:

U.S.ARMY ENGINEER DISTRICT,SEATTLE
CORPS OF ENGINEERS
SEATTLE, WASHINGTON
Prepared by:

ADDITIONAL WATER STORAGE PROJECT
HOWARD HANSON DAM
GREEN RIVER WASHINGTON

DRAWING INDEX

Plate number: G-002
Sheet of

DESIGN FILE: I:\AECDESIGNS\HHAW\General\HHAWG-0g-001.DGN
DATE AND TIME PLOTTED: 8/7/2008 7:18:41 AM

SURVEY

THEOR./ EXIST.	FOUND/ PROP.	DESCRIPTION (ABBR)
△	△	ANGLE POINT
⌖	⌖	BENCH MARK
®	®	REBAR/IRON PIPE
⊛	⊛	MONUMENT (IN CASE)
⌂	⌂	MONUMENT (SURFACE)
× ELEV	× ELEV	SPOT ELEVATION

SH-DATUM

USGS 1982

NORTH ARROW

SCALE

200′ 100′ 0 200′ 400′

FEET

LINETYPES

- CONTOUR (PRIMARY)
- CONTOUR (SECONDARY)
- EXISTING GROUND
- PROPOSED GROUND
- PROJECT WORK LIMITS
- W — WATER LINE
- BRUSH LINE
- LIGHT POLE
- CONCRETE PAVEMENT
- TREE
- LANDSCAPE/HYDROSEED

DRAFTING

SYMBOL	DESCRIPTION (ABBR)
1 T2 C1	DETAIL CALLOUT ON PLAN SHEET
	SECTION CALLOUT ON PLAN SHEET

DETAIL CALLOUT

DESCRIPTION

DETAIL NUMBER

DETAIL

SCALE:

XX

SHEET WHERE DETAIL IS REFERENCED

SECTION/ELEVATION CALLOUT

DESCRIPTION

SECTION DESIGNATION (ALPHABETIC)

SECTION

SCALE:

XX

SHEET WHERE SECTION IS CUT

90 DEGREE ANGLE

ABBREVIATIONS

ASPH	ASPHALT
BRDG	BRIDGE
CLF	CHAIN LINK FENCE
COR	USACE CONTRACTING OFFICER REPRESENTATIVE
E	EAST
ELEV	ELEVATION
EMB	EMBANKMENT
EO	EDGE OF
EOA	EDGE OF ASPHALT
EOC	EDGE OF CONCRETE
EOG	EDGE OF GRAVEL
EP	EDGE OF PAVEMENT
EXC	EXCAVATION
EXIST	EXISTING
FIG	FIGURE
FT	FEET/FOOT
IN	INCH/INCHES
LF	LINEAL FOOT/FEET
MIN	MINIMUM
MISC	MISCELLANEOUS
NTS	NOT TO SCALE
PVMT	PAVEMENT
R	RADIUS OF CURVE
REQD	REQUIRED
SE	SPOT EL
SECT	SECTION
SIM	SIMILAR
SPEC.	SPECIFICATION
STA	STATION
STD	STANDARD
S1	LAYOUT SURVEY CASE AND MONUMENT AND NUMBER
TEMP	TEMPORARY
TYP	TYPICAL
VAR	VARIES
W/	WITH
W.S.	WATER SURFACE
WSDOT	WASHINGTON STATE DEPARTMENT OF TRANSPORTATION

GENERAL NOTES:

1. ELEVATIONS SHOWN ON THESE DRAWINGS ARE BASED ON NAVD 88 DATUM.

2. HORIZONTAL COORDINATES ON THESE DRAWINGS ARE BASED ON THE WASHINGTON STATE PLANE COORDINATE SYSTEM – NORTH ZONE.

3. CONTRACTOR SHALL VERIFY ALL DIMENSIONS BEFORE STARTING WORK AND SHALL IMMEDIATELY NOTIFY THE ENGINEER OF ANY DISCREPANCIES.

4. BEFORE EXCAVATION OR TRENCHING, CONTRACTOR SHALL CALL 1-800-424-5555 TO LOCATE UNDERGROUND UTILITIES. ANY DAMAGE TO EXISTING FACILITIES SHALL BE REPAIRED BY THE CONTRACTOR AT NO COST TO THE OWNER.

5. THE HORIZONTAL AND VERTICAL LOCATION OF EXISTING UTILITIES AND IMPROVEMENTS ARE APPROXIMATE. THE CONTRACTOR SHALL VERIFY THE EXACT LOCATION OF ALL UTILITIES AND IMPROVEMENTS PRIOR TO EXCAVATION TO AVOID DAMAGE AND DISTURBANCE. THE CONTRACTOR IS RESPONSIBLE FOR PROTECTING AND PRESERVING THE INTEGRITY OF ALL EXISTING UTILITIES DURING CONSTRUCTION.

6. ALL DISTANCES SHOWN ON THE DRAWINGS AND DESCRIBED IN THE SPECIFICATIONS SHALL BE INTERPRETED TO REFER TO HORIZONTALLY AND VERTICALLY PROJECTED PLANES UNLESS OTHERWISE NOTED.

7. SITE ACCESS DURING CONSTRUCTION IS LIMITED TO STABILIZED CONSTRUCTION ENTRANCES.

8. ALL SURFACES DISTURBED DURING CONSTRUCTION AND NOT SCHEDULED TO RECEIVE ASPHALT, GRAVEL, QUARRY SPALLS, OR OTHER SURFACING SHALL BE SEEDED, FERTILIZED, AND MULCHED IN ACCORDANCE WITH THE SPECIFICATIONS OR AS DIRECTED BY THE COR.

9. THE CONTRACTOR SHALL BE RESPONSIBLE FOR FULL RESTORATION OF ALL EXISTING FEATURES DISTURBED DURING CONSTRUCTION TO THEIR ORIGINAL CONDITION UNLESS OTHERWISE INDICATED BY THE COR.

10. OTHER WORK ON-SITE MAY BE PERFORMED BY OTHER CONTRACTORS IN CONJUNCTION WITH THIS PROJECT. THE CONTRACTOR SHALL BE RESPONSIBLE FOR COORDINATING ALL WORK.

US Army Corps of Engineers
Seattle District

Symbol	Description	Appr.	Date
		Symbol	/ /

U.S.ARMY ENGINEER DISTRICT,SEATTLE
CORPS OF ENGINEERS
SEATTLE,WASHINGTON
Prepared by:

Designed by: STONE
Drawn by: BARRETT
Checked by: FISCHER

Date: 16 MAR 06
File # E-56-14-19
Rev.

ADDITIONAL WATER STORAGE PROJECT
HOWARD HANSON DAM

SYMBOLS, ABBREVIATIONS & GENERAL NOTES

GREEN RIVER WASHINGTON

Plate number: C-001

Sheet of

DESIGN FILE: P:\AE\CDDESIGNS\HHAW\Civil\HHAWC-001G01.DGN
DATE AND TIME PLOTTED: 07-AUG-2008 07:41

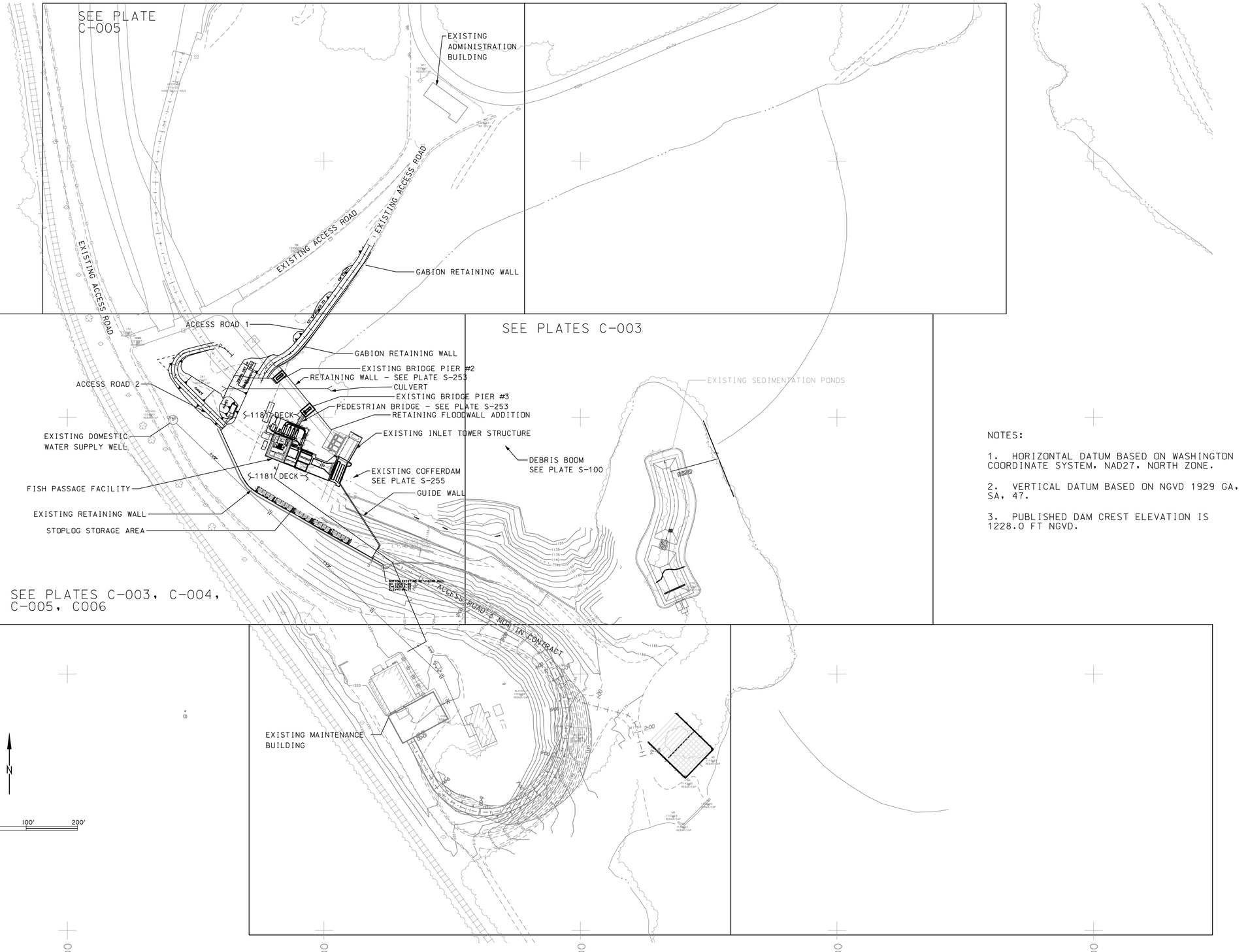

NOTES:

1. HORIZONTAL DATUM BASED ON WASHINGTON COORDINATE SYSTEM, NAD27, NORTH ZONE.

2. VERTICAL DATUM BASED ON NGVD 1929 GA, SA, 47.

3. PUBLISHED DAM CREST ELEVATION IS 1228.0 FT NGVD.

US Army Corps of Engineers
Seattle District

Symbol	Description	Date	Appr.	Symbol	Description
		/ /			

Designed by: STONE
Drawn by: BARRETT
Checked by: FISCHER
Date: 08 MAR 06
File: E-56-14-19
Rev.

U.S.ARMY ENGINEER DISTRICT,SEATTLE
CORPS OF ENGINEERS
SEATTLE, WASHINGTON
Prepared by:

ADDITIONAL WATER STORAGE PROJECT
HOWARD HANSON DAM

GENERAL SITE PLAN

GREEN RIVER WASHINGTON

Plate number: C-002
Sheet of

DESIGN FILE: I:\AECDESIGNS\HHAW\Civil\HHAWC-002G02.DGN
DATE AND TIME PLOTTED: 07-AUG-2008 07:42

EXISTING ADMINISTRATION BUILDING

EXISTING 2,000 GALLON UNDERGROUND FUEL STORAGE TANK

EXISTING SPILLWAY

EXISTING ACCESS ROAD

EXISTING 19' HORSESHOE TUNNEL

EXISTING ACCESS ROAD

EXISTING SPILLWAY

GREEN RIVER

EXISTING BRIDGE PIER (TYP)

EXISTING ACCESS ROAD

EXISTING CATCH BASIN

EXISTING SANDBAGS OR OTHER CONTRACTOR-DESIGNED BARRIER TO ELEVATION 1170.0

EXISTING DEBRIS BOOM

EXISTING SEDIMENTATION PONDS

EXISTING CONCRETE FLOODWALL TOP OF WALL EL. 1170.0

EXISTING INLET TOWER STRUCTURE

EXISTING DOMESTIC WATER SUPPLY WELL SEE NOTE 3.

EXISTING COFFERDAM STRUCTURE

EXISTING PHASE I EXCAVATION AREA SEE NOTE 2.

EXISTING TEMPORARY ACCESS ROAD

EXISTING RETAINING WALL

EARTH BERM TOP EL. 1170.0

BOTTOM EXISTING RETAINING WALL N= 102213.30 E=1763610.20 ELEV=1184.77

EXISTING TEMPORARY ACCESS ROAD

EXISTING ACCESS ROAD

EXISTING ACCESS ROAD

EXISTING PROPANE TANK

EXISTING FUEL TANK

EXISTING MAINTENANCE BUILDING

EXISTING DEBRIS BOOM

EXISTING DEBRIS HOLDING AREA

NOTES:

1. PUBLISHED DAM CREST ELEVATION IS 1228.0 FT NGVD.

2. SEE ATTACHED CIVIL AND ENVIRONMENTAL REFERENCE DRAWINGS FOR EXISTING SITE CONDITIONS FROM PHASE I CONSTRUCTION.

3. THE EXISTING DOMESTIC WATER SUPPLY WELL IS AVAILABLE FOR USE. TOTAL DEPTH OF BORING IS 250'. CASING IS 8" ID STEEL FROM 0'-18' BELOW SURFACE AND 6" ID STEEL FROM 18'-250' BELOW SURFACE.

N

1" = 60' 60' 30' 0 60' 120'

ADDITIONAL WATER STORAGE PROJECT
HOWARD HANSON DAM, WASHINGTON
SCALE: 1" = 50'
MAP COMPILED FROM AERIAL PHOTOGRAPHY
SUPPLEMENTED BY FIELD SURVEY
BATHYMETRY & FIELD SURVEY PERFORMED BY DEA, INC. JAN. 2000.
FIELD BOOK FILE NO. 313-092, BOOKS 2 & 3 OF .
HORIZONTAL CONTROL BASED ON WASH. COORD. SYSTEM, NAD27, NORTH ZONE.
VERTICAL CONTROL BASED ON N.G.V.D..
'SAVED VIEW' INFORMATION IS ON LEVEL 63

US Army Corps of Engineers
Seattle District

Symbol	Description	Date	Appr.	Symbol	Description
		/ /			

U.S.ARMY ENGINEER DISTRICT,SEATTLE
CORPS OF ENGINEERS
SEATTLE, WASHINGTON

Prepared by:

Designed by: STONE
Drawn by: BARRETT
Checked by: FISCHER

Date: 16 MAR 06
File: E-56-14-19
Rev.

ADDITIONAL WATER STORAGE PROJECT
HOWARD HANSON DAM
EXISTING SITE CONDITIONS
GREEN RIVER WASHINGTON

Plate number: C-003
Sheet of

DATE AND TIME PLOTTED: 07-AUG-2008 07:43
DESIGN FILE: J:\ACCDESIGNS\HHAW\Civil\HHAWC-003003.DGN

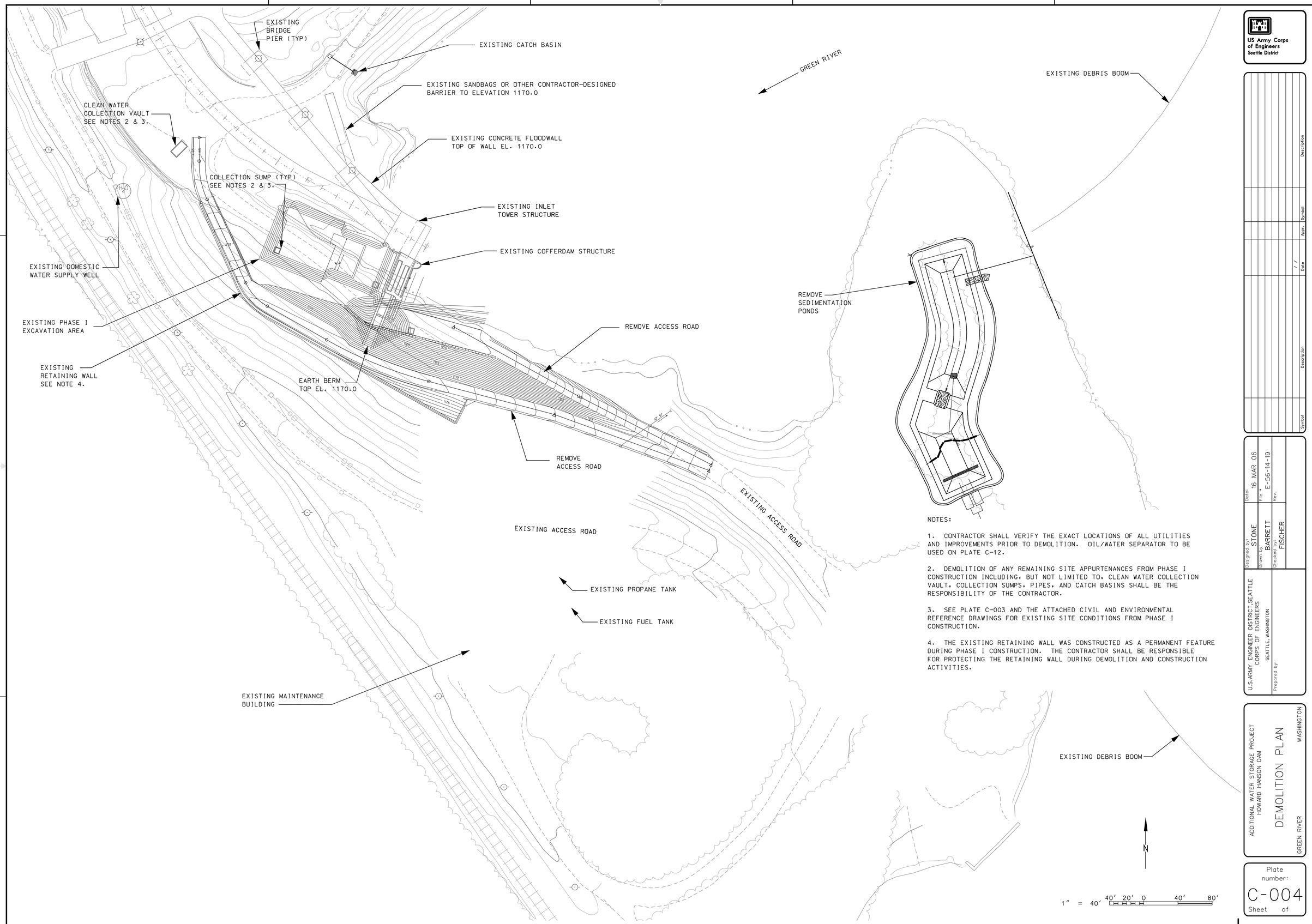

NOTES:

1. CONTRACTOR SHALL VERIFY THE EXACT LOCATIONS OF ALL UTILITIES AND IMPROVEMENTS PRIOR TO DEMOLITION. OIL/WATER SEPARATOR TO BE USED ON PLATE C-12.

2. DEMOLITION OF ANY REMAINING SITE APPURTENANCES FROM PHASE I CONSTRUCTION INCLUDING, BUT NOT LIMITED TO, CLEAN WATER COLLECTION VAULT, COLLECTION SUMPS, PIPES, AND CATCH BASINS SHALL BE THE RESPONSIBILITY OF THE CONTRACTOR.

3. SEE PLATE C-003 AND THE ATTACHED CIVIL AND ENVIRONMENTAL REFERENCE DRAWINGS FOR EXISTING SITE CONDITIONS FROM PHASE I CONSTRUCTION.

4. THE EXISTING RETAINING WALL WAS CONSTRUCTED AS A PERMANENT FEATURE DURING PHASE I CONSTRUCTION. THE CONTRACTOR SHALL BE RESPONSIBLE FOR PROTECTING THE RETAINING WALL DURING DEMOLITION AND CONSTRUCTION ACTIVITIES.

US Army Corps of Engineers
Seattle District

Symbol	Description	Appr.	Symbol	Date	Description
				/ /	

Date: 16 MAR 06
File: E-56-14-19
Rev.

Designed by: STONE
Drawn by: BARRETT
Checked by: FISCHER

U.S.ARMY ENGINEER DISTRICT,SEATTLE
CORPS OF ENGINEERS
SEATTLE, WASHINGTON
Prepared by:

ADDITIONAL WATER STORAGE PROJECT
HOWARD HANSON DAM
GREEN RIVER WASHINGTON

DEMOLITION PLAN

Plate number:
C-004
Sheet of

DATE AND TIME PLOTTED: 07-AUG-2008 07:43
DESIGN FILE: I:\AE\DESIGNS\HHAW\Civil\HHAWC-004C04.DGN

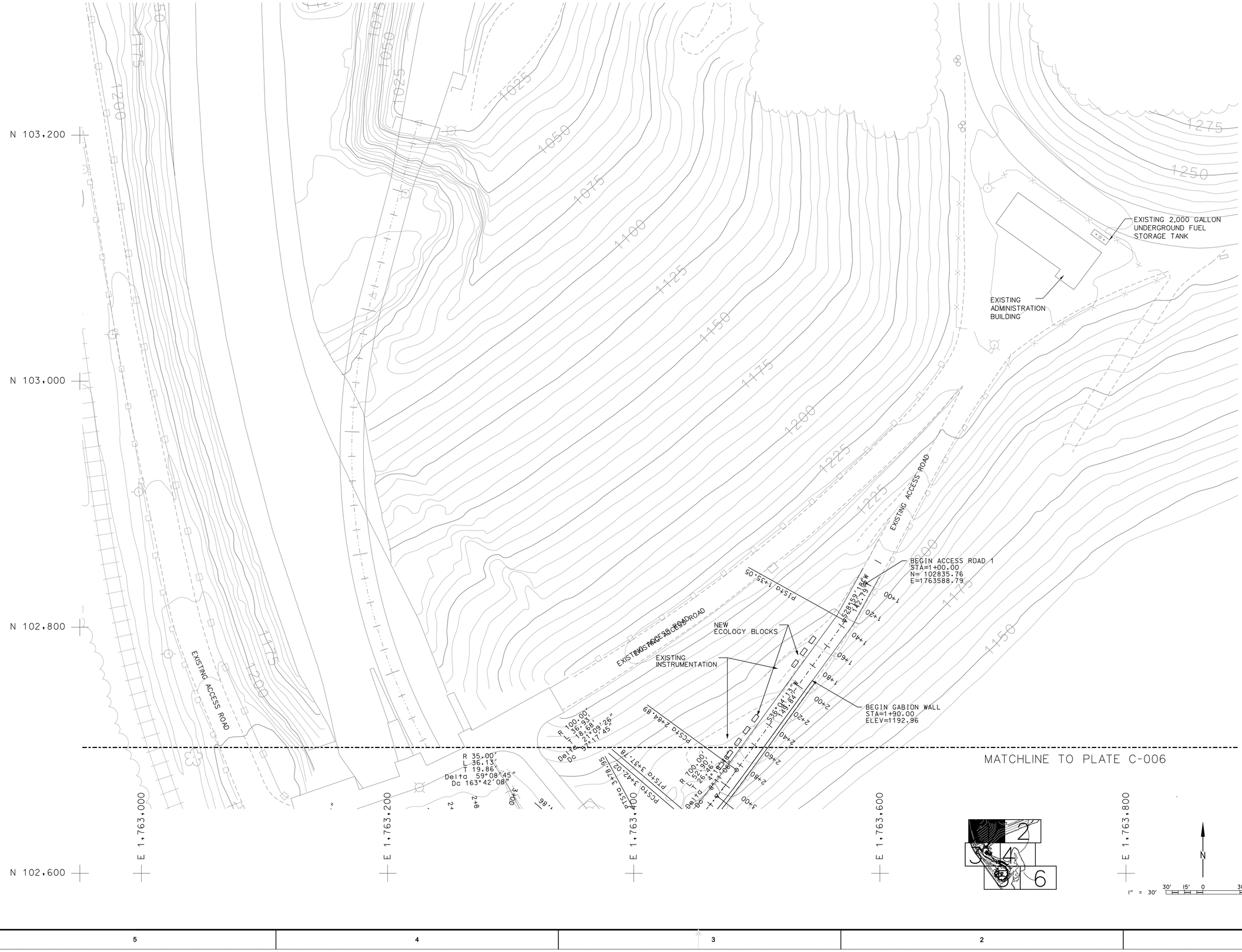

US Army Corps of Engineers
Seattle District

Symbol	Description	Appr.	Date
			/ /

U.S.ARMY ENGINEER DISTRICT,SEATTLE
CORPS OF ENGINEERS
SEATTLE, WASHINGTON

Prepared by:

Designed by: STONE
Drawn by: BARRETT
Checked by: FISCHER

Date: 16 MAR 06
File: E-56-14-19
Rev.

ADDITIONAL WATER STORAGE PROJECT
HOWARD HANSON DAM

SITE PLAN 1

GREEN RIVER WASHINGTON

Plate number:
C-005
Sheet of

DATE AND TIME PLOTTED: 07-AUG-2008 07:44
DESIGN FILE: J:\AECDESIGNS\HHAW\Civil\HHAWC-101S01.DGN

MATCHLINE TO PLATE C-005

N 102,600

N 102,400

N 102,200

E 1,763,000

E 1,763,200

E 1,763,400

E 1,763,600

NOTES:

1. ROADWAY SURFACES SHALL BE GRAVEL WEARING COURSE UNLESS OTHERWISE SHOWN ON THE DRAWINGS.

2. THE 1181 DECK SURFACE SHALL BE CONCRETE PAVEMENT.

N 102,590.47
E 1,763,228.53

END ACCESS ROAD 2
STA=3+31.24
N= 102621.00
E=1763321.00

EXISTING ACCESS ROAD

EXISTING BRIDGE PIER #2

ACCESS ROAD 1

BEGIN GABION WALL
STA=1+90.00
ELEV=1192.96

N 102,692.11
E 1,763,491.20

GABION RETAINING WALL

GABION RETAINING WALL

E C-301

END GABION RETAINING WALL

CONCRETE RETAINING WALL SEE PLATE X

CULVERT

E C-301

30KGAL UST FP 11x53

N 102,576.97
E 1,763,386.93

FISH MONITORING STATION SEE PLATE X

EXISTING BRIDGE PIER #3 SEE PLATE X

PEDESTRIAN BRIDGE, SEE PLATE X

STAIRS, SEE PLATE X

CONCRETE RETAINING FLOODWALL ADDITION SEE PLATE S-253

CATWALK, SEE PLATE X

END ACCESS ROAD 1
STA=4+46.42
N= 102566.82
E=1763376.74

O/W

1181 DECK

BEGIN ACCESS ROAD 2
STA=0+40.00
N= 102482.48
E=1763306.91

no ramp

EXISTING DOMESTIC WATER SUPPLY WELL

BURIED TRUCK/REUSE STORAGE TANK SEE PLATE X

ACCESS TO UNDERGROUND HOLDING TANK SEWAGE SYSTEM SEE PLATE X

17.6% ramp down

UST RAMP

FISH FACILITY

FISH FACILITY

EXISTING INLET TOWER STRUCTURE

DEBRIS BOOM SEE PLATE S-100

GANTRY CRANE NORTHERN POSITION

EXISTING COFFERDAM

DEWATERING STOPLOG STOP SEE PLATE X

FOOTPRINT OF PROPOSED FISH PASSAGE FACILITY SEE NOTE 3

1181 DECK SEE NOTE 2.

GUIDE WALL, SEE PLATE S-255

RAILS, SEE PLATE X

EXTENT OF CRANE RAILS SEE PLATE X

EXTENT OF CRANE ENVELOPE SEE PLATE X

STOPLOG STORAGE RACK SEE PLATE M-502

GUTTER

EXISTING RETAINING WALL

ACCESS ROAD 3 NOT IN CONTRACT

1200

1225

I-1/2"

N 102,210.75
E 1,763,618.50

START RETAINING WALL ALONG EDGE OF ACCESS ROAD 3

BOTTOM ACCESS ROAD 3 RETAINING WALL
N= 102213.50
E=1763615.22
ELEV=1184.77

0+00

1" = 30' 30' 15' 0 30' 60'

US Army Corps of Engineers
Seattle District

Symbol	Description	Date	Appr.	Symbol	Description
		/ /			

Designed by: STONE
Drawn by:
Checked by:
Prepared by:

Date: 16 MAR 06
File # E-56-14-19
Rev.

U.S.ARMY ENGINEER DISTRICT,SEATTLE
CORPS OF ENGINEERS
SEATTLE, WASHINGTON

ADDITIONAL WATER STORAGE PROJECT
HOWARD HANSON DAM
GREEN RIVER WASHINGTON

SITE PLAN 3

Plate number:
C-006
Sheet of

DATE AND TIME PLOTTED: 07-AUG-2008 07:45
DESIGN FILE: J:\ACEDESIGNS\HHAWC\civil\HHAWC-102S02.DGN

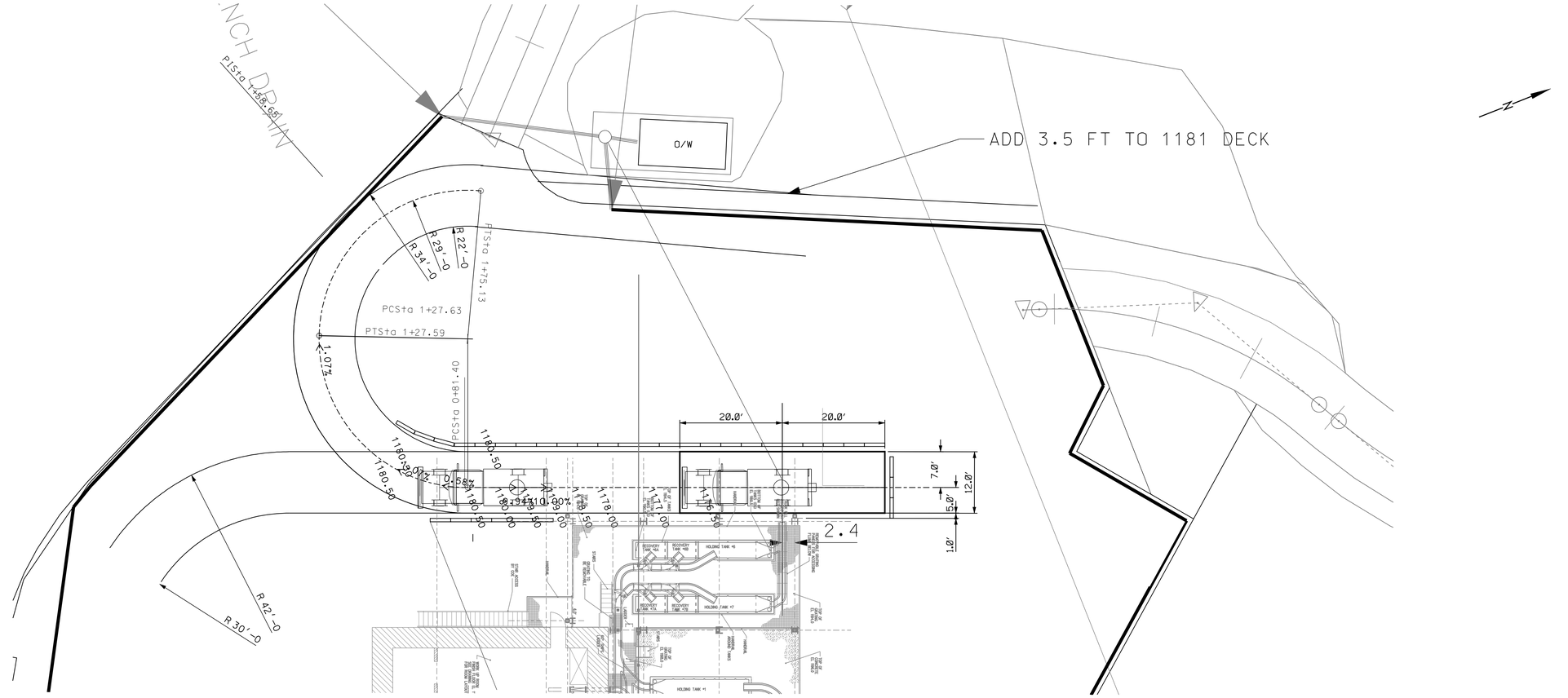

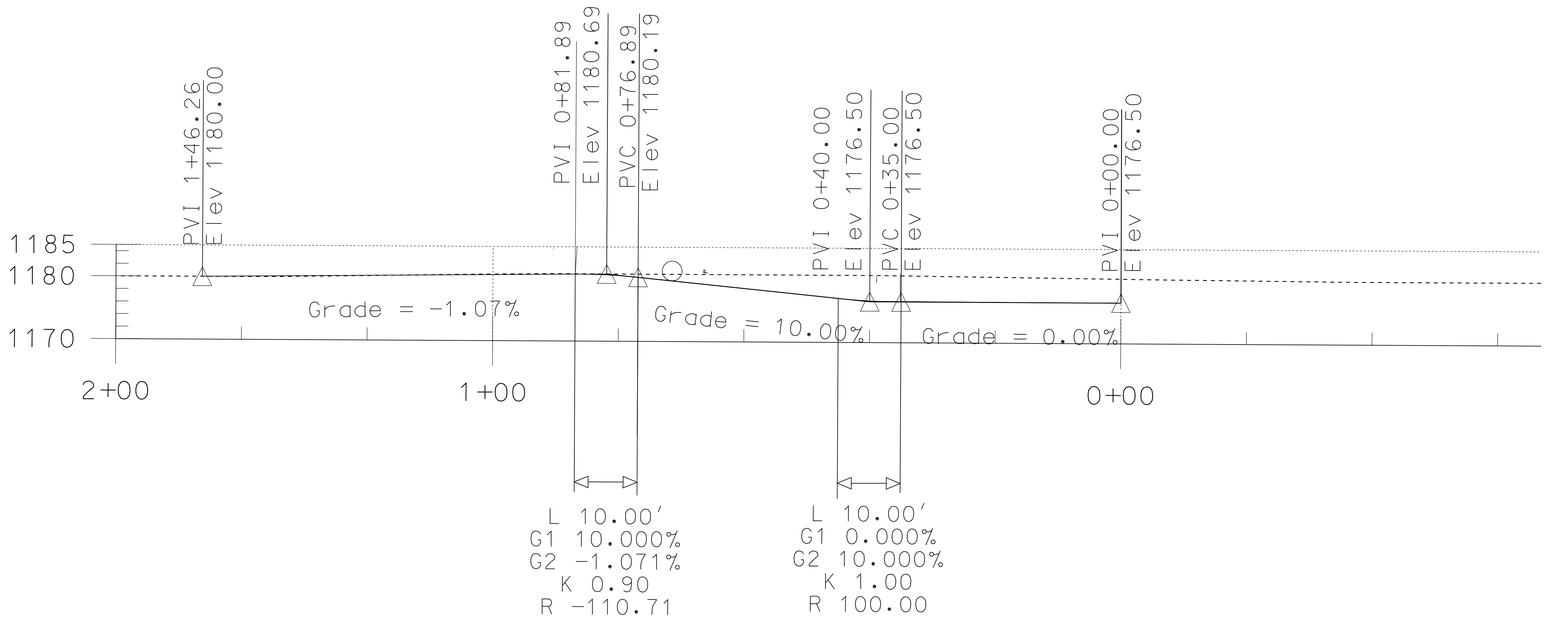

US Army Corps of Engineers
Seattle District

Symbol	Description	Date	Appr.	Symbol	Description
		/ /			

Designed by:
Drawn by:
Checked by:
Prepared by:

Date: 16 MAR 06
File #: E-56-14-19
Rev.

U.S.ARMY ENGINEER DISTRICT,SEATTLE
CORPS OF ENGINEERS
SEATTLE, WASHINGTON

ADDITIONAL WATER STORAGE PROJECT
HOWARD HANSON DAM
GREEN RIVER WASHINGTON

SITE PLAN 3
FISH TRUCK RAMP
title2

Plate number:
C-sta07
Sheet of

DATE AND TIME PLOTTED: 07-AUG-2008 07:47 DESIGN FILE: J:\AE\DESIGNS\HHAW\Civil\HHAWC-103S03.DGN

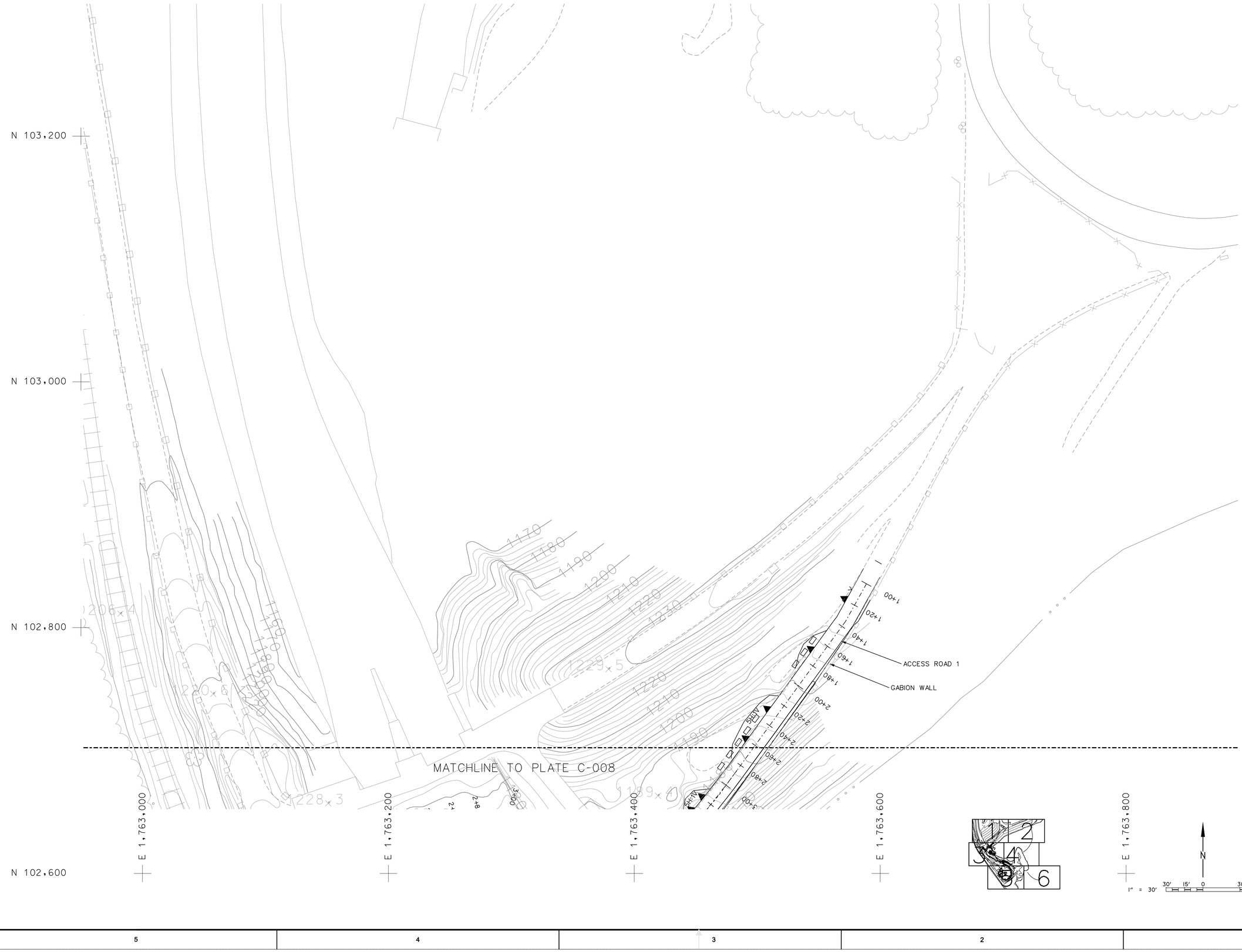

US Army Corps of Engineers
Seattle District

Symbol	Description	Date	Appr.	Symbol	Description
		/ /			

Designed by: STONE
Drawn by: BARRETT
Checked by: FISCHER
Date: 16 MAR 06
File #: E-56-14-19
Rev.

U.S.ARMY ENGINEER DISTRICT,SEATTLE
CORPS OF ENGINEERS
SEATTLE, WASHINGTON
Prepared by:

ADDITIONAL WATER STORAGE PROJECT
HOWARD HANSON DAM
GRADING PLAN 1
GREEN RIVER WASHINGTON

Plate number:
C-008
Sheet of

DATE AND TIME PLOTTED: 07-AUG-2008 07:48
DESIGN FILE: I:\AECDESIGNS\HHAW\Civil\HHAWCG101G01.DGN

MATCHLINE TO PLATE C-007

N

N 102,600

N 102,400

N 102,200

E 1,763,000

E 1,763,200

E 1,763,400

E 1,763,600

N= 102556.40
E=1763309.62
IE=1164.00
36" CULVERT

N= 102499.37
E=1763328.94
IE=1175.37
END 4" WIDE TRENCH DRAIN

N= 102475.32
E=1763299.87
IE=1175.76
END 4" WIDE TRENCH DRAIN

EXISTING ACCESS ROAD

ACCESS ROAD 1

ACCESS ROAD 1

GABION WALL

10KGAL UST F.P.

N= 102556.60
E=1763507.13
IE=1163.00
36" CULVERT

CONCRETE RETAINING WALL

N= 102474.66
E=1763514.27
IE=1180.00
START 4" WIDE TRENCH DRAIN

EXISTING INLET
TOWER STRUCTURE

COFFERDAM
BY OTHERS

1181 DECK

GUIDE WALL

EXISTING
RETAINING WALL

N 102,251.0500
E 1,763,607.7000

BOTTOM EXISTING RETAINING WALL
N= 102213.90
E=1763615.22
ELEV=1184.77

1" = 30' 30' 15' 0 30' 60'

1" = 10'

US Army Corps of Engineers
Seattle District

Symbol	Description	Appr.	Date
			/ /

U.S.ARMY ENGINEER DISTRICT,SEATTLE
CORPS OF ENGINEERS
SEATTLE, WASHINGTON
Prepared by:

Designed by: STONE
Drawn by: BARRETT
Checked by: FISCHER
Date: 16 MAR 06
File: E-56-14-19
Rev.

ADDITIONAL WATER STORAGE PROJECT
HOWARD HANSON DAM
GRADING PLAN 2
GREEN RIVER WASHINGTON

Plate number:
C-009
Sheet of

DATE AND TIME PLOTTED: 07-AUG-2008 07:49 DESIGN FILE: J:\AECDESIGNS\HHAW\Civil\HHAWCC102G02.DGN



N

1" = 10' 10' 5' 0 10' 20'

US Army Corps of Engineers
Seattle District

Symbol	Description	Date	Appr.	Symbol	Description
		/ /			

Designed by: LAZO
Drawn by: BARRETT
Checked by: FISCHER

Date: 16 MAR 06
File: E-56-14-19
Rev.

U.S.ARMY ENGINEER DISTRICT SEATTLE
CORPS OF ENGINEERS
SEATTLE, WASHINGTON

Prepared by:

ADDITIONAL WATER STORAGE PROJECT
HOWARD HANSON DAM

CONCRETE JOINT PLAN 1

GREEN RIVER WASHINGTON

Plate number: C-010
Sheet of

DATE AND TIME PLOTTED: 07-AUG-2008 07:49
DESIGN FILE: J:\AECDESIGNS\HHAW\Civil\HHAWCC10303.DGN



US Army Corps of Engineers
Seattle District

Symbol	Description	Appr.	Date
			/ /

U.S.ARMY ENGINEER DISTRICT,SEATTLE
CORPS OF ENGINEERS
SEATTLE, WASHINGTON

Designed by: LAZO
Drawn by: BARRETT
Checked by: FISCHER
Prepared by:

Date: 16 MAR 06
File: E-56-14-19
Rev.

ADDITIONAL WATER STORAGE PROJECT
HOWARD HANSON DAM

CONCRETE JOINT PLAN 2

GREEN RIVER WASHINGTON

Plate number: C-011
Sheet of

DATE AND TIME PLOTTED: 07-AUG-2008 0749 DESIGN FILE: J:\AECDESIGNS\HHAW\Civil\HHAWCC104G04.DGN

STANDARD LEGEND FOR PAVEMENTS

CONTRACTION JOINTS
- SAWED — — — — —

CONSTRUCTION JOINTS
- DOWELED, THICKENED EDGE ———————
- DOWELED /////////
- THICKENED EDGE BUTT
  - ONE SIDE T T T T
  - BOTH SIDES T T T T / T T T T

EXPANSION JOINTS
- DOWELED E E E E
- THICKENED EDGE TE TE TE TE

REINFORCED ODD SHAPED SLABS R

TABLE 1			
PAVEMENT THICKNESS INCHES h	MINIMUM DOWEL LENGTH (INCHES)	MAXIMUM DOWEL SPACING (INCHES)	DOWEL DIAMETER (d) AND TYPE
12 TO 15 1/2	20	15	1 TO 1 1/4 INCH BAR

NOTES:

1. NONABSOPRTIVE "SEPARATING TAPE" REQUIRED TO PREVENT JOINT SEALANT FROM FLOWING INTO THE SAWCUT, TO BREAK BOND AT THE BOTTOM OF SEALANT AND TO SEPARATE NONCOMPATIBLE MATERIALS.

2. JOINT DETAILS SHOWN REPRESENT CONTRACTION JOINT REQUIREMENTS. CONSTRUCTION JOINTS ARE SIMILAR EXCEPT NO INITIAL SAWCUT IS REQUIRED.

3. THE DEPTH OF INITIAL SAWCUT "T" IS EQUAL TO 1/4 PAVEMENT THICKNESS AND NOT LESS THAN 2 INCHES.

4. D= DEPTH OF SEALANT, 1 1/2 TIMES THE WIDTH OF SEALANT BUT NOT LESS THAN 3/4 INCH.

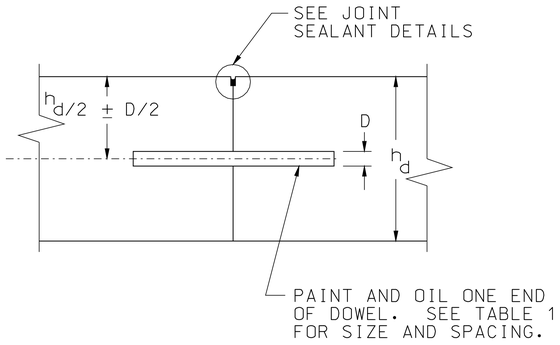

DOWELED CONSTRUCTION JOINT
NO SCALE

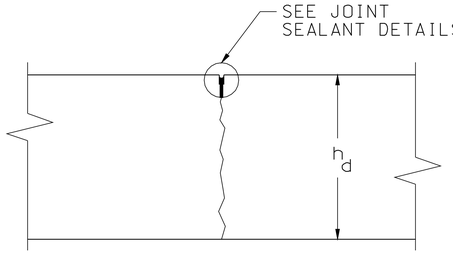

SAWED CONSTRUCTION JOINT
NO SCALE

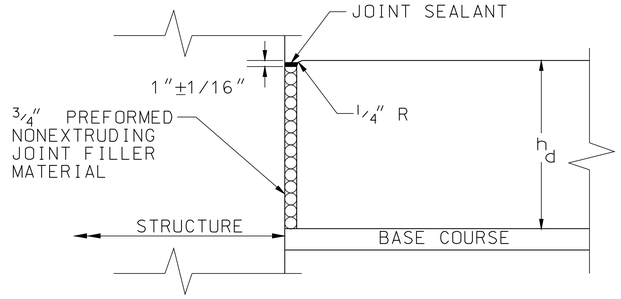

EXPANSION JOINT AT STRUCTURE
NO SCALE

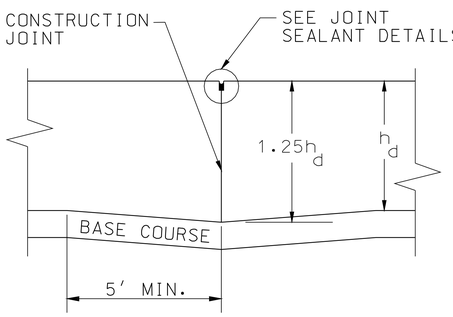

THICKENED-EDGE JOINT
NO SCALE

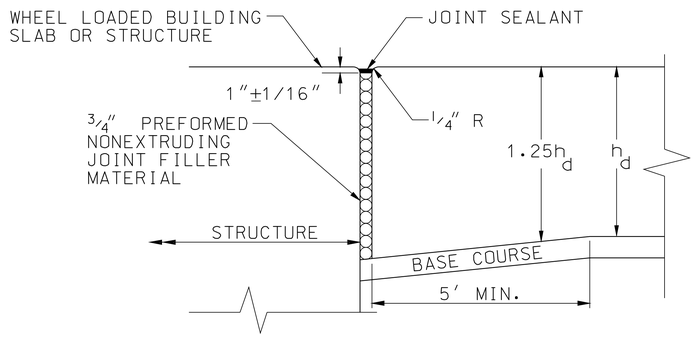

THICKENED EDGE TYPE EXPANSION JOINT AT STRUCTURE
NO SCALE

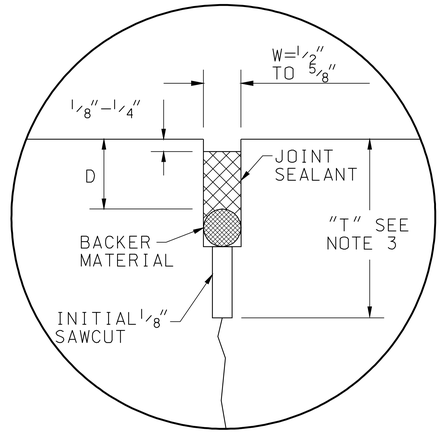

SAWED JOINT-POURED SEALANT WITH BACKER MATERIAL
NO SCALE

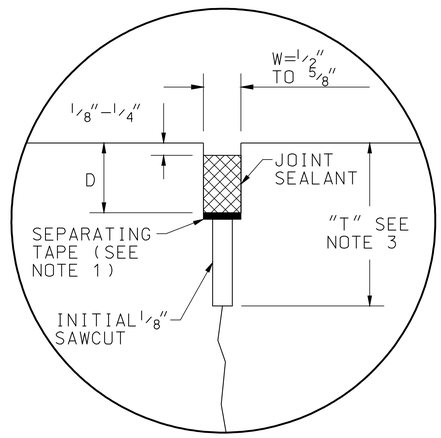

SAWED JOINT-POURED SEALANT WITH SEPARATING TAPE
NO SCALE

US Army Corps of Engineers
Seattle District

Symbol	Description	Date	Appr.	Symbol	Description
		/ /			

Date: 16 MAR 06
File: E-56-14-19
Rev:

Designed by: LAZO
Drawn by: BARRETT
Checked by: FISCHER

U.S.ARMY ENGINEER DISTRICT,SEATTLE
CORPS OF ENGINEERS
SEATTLE, WASHINGTON
Prepared by:

ADDITIONAL WATER STORAGE PROJECT
HOWARD HANSON DAM
CONCRETE JOINT
LEGEND AND DETAILS
GREEN RIVER WASHINGTON

Plate number: C-012
Sheet of

DESIGN FILE: I:\AECDESIGNS\HHAW\Civil\HHAWCC105C05.DGN
DATE AND TIME PLOTTED: 07-AUG-2008 07:50

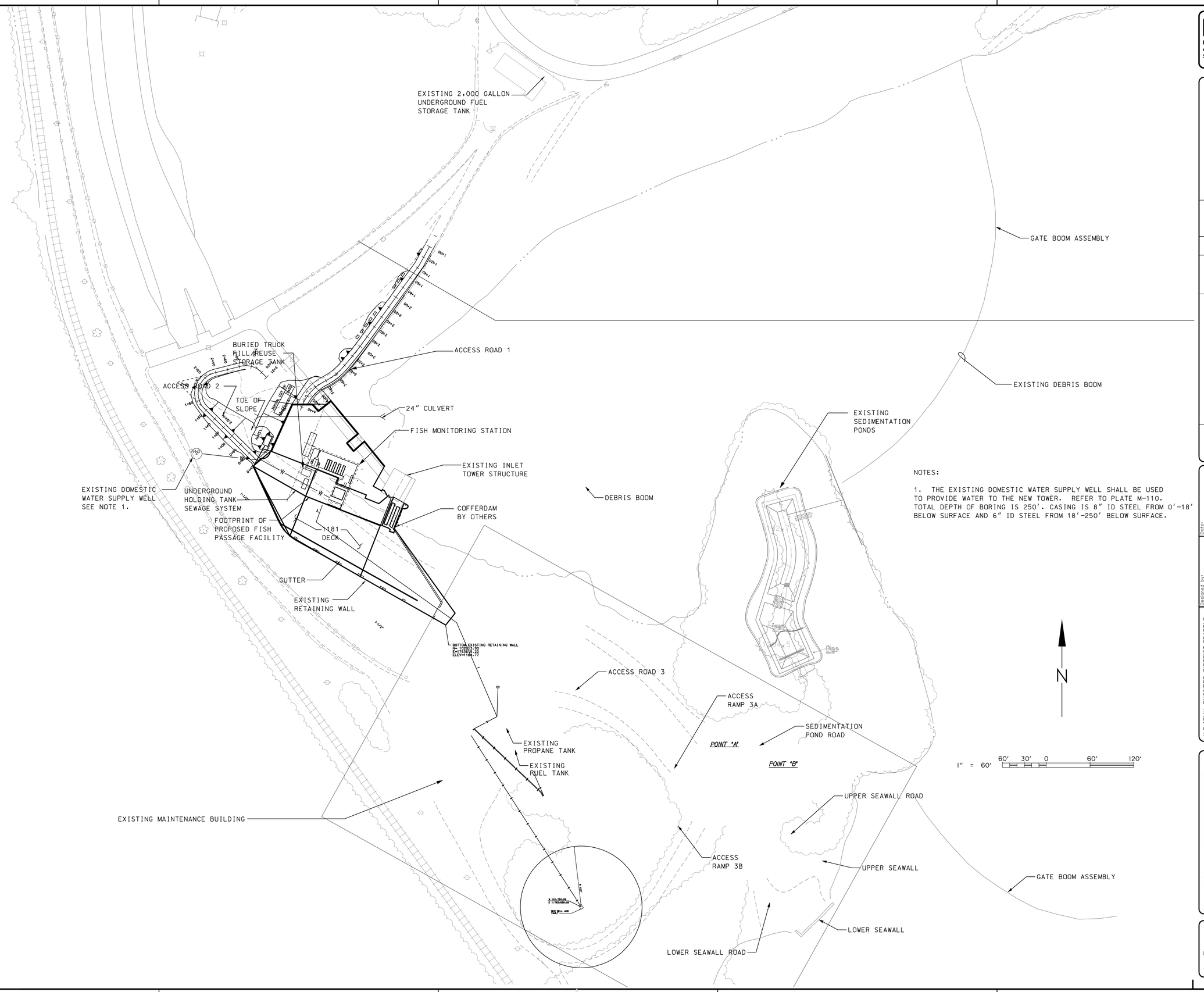

NOTES:

1. THE EXISTING DOMESTIC WATER SUPPLY WELL SHALL BE USED TO PROVIDE WATER TO THE NEW TOWER. REFER TO PLATE M-110. TOTAL DEPTH OF BORING IS 250'. CASING IS 8" ID STEEL FROM 0'-18' BELOW SURFACE AND 6" ID STEEL FROM 18'-250' BELOW SURFACE.

US Army Corps of Engineers
Seattle District

Symbol	Description	Date	Appr.	Symbol	Description
		/ /			

U.S.ARMY ENGINEER DISTRICT,SEATTLE
CORPS OF ENGINEERS
SEATTLE, WASHINGTON

Prepared by:

Designed by: STONE
Drawn by: BARRETT
Checked by: FISCHER
Date: 16 MAR 06
File #: E-56-14-19
Rev.

ADDITIONAL WATER STORAGE PROJECT
HOWARD HANSON DAM

UTILITY PLAN

GREEN RIVER WASHINGTON

Plate number:
C-013
Sheet of

DATE AND TIME PLOTTED: 07-AUG-2008 07:50
DESIGN FILE: I:\AECDESIGNS\HHAW\Civil\HHAWCU101-01.DGN

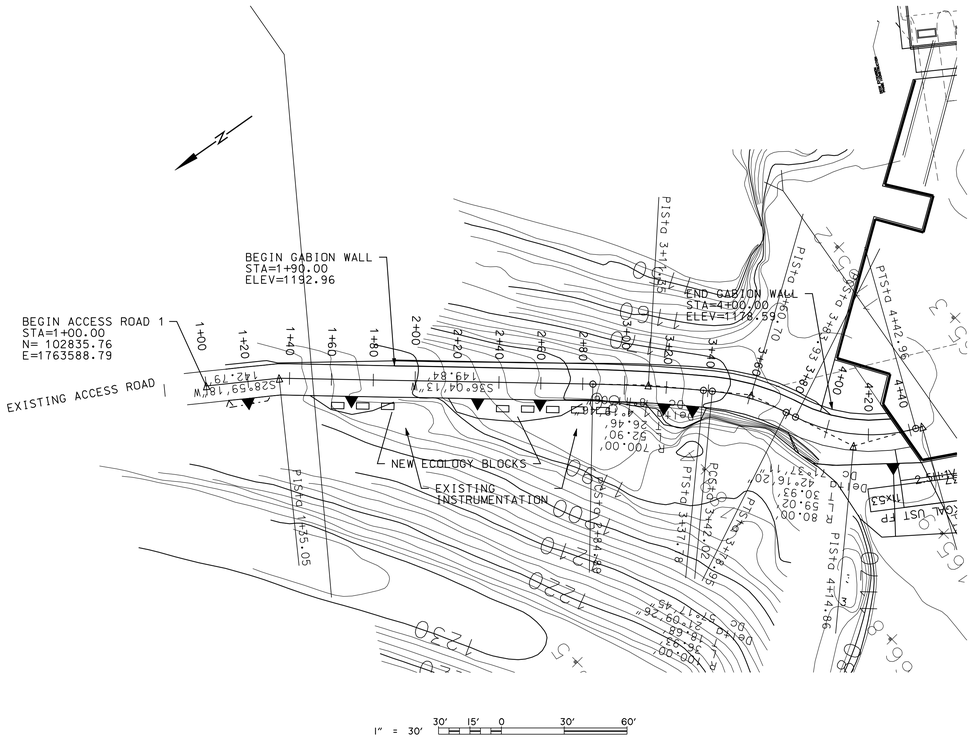

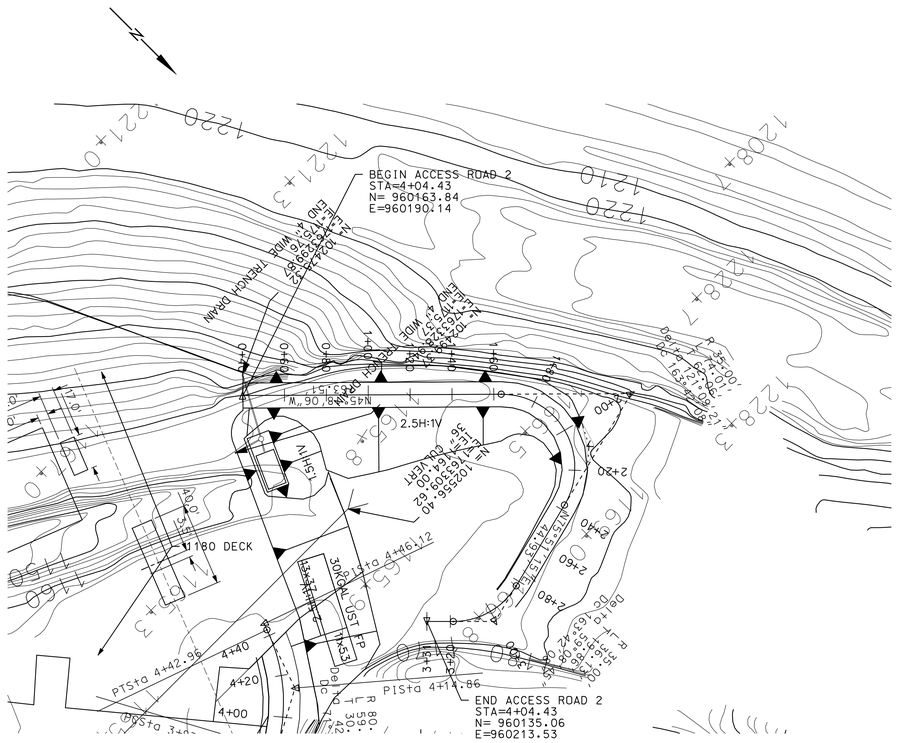

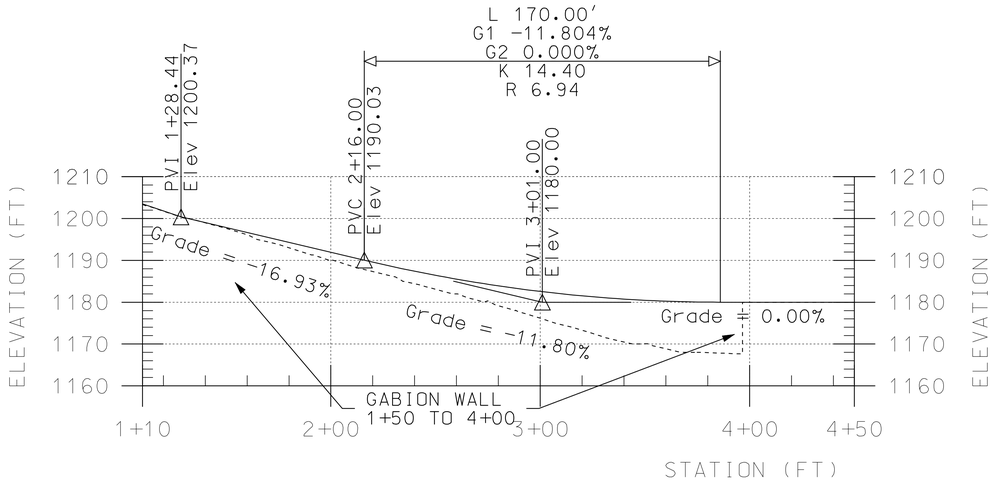

ACCESS ROAD 1 PROFILE

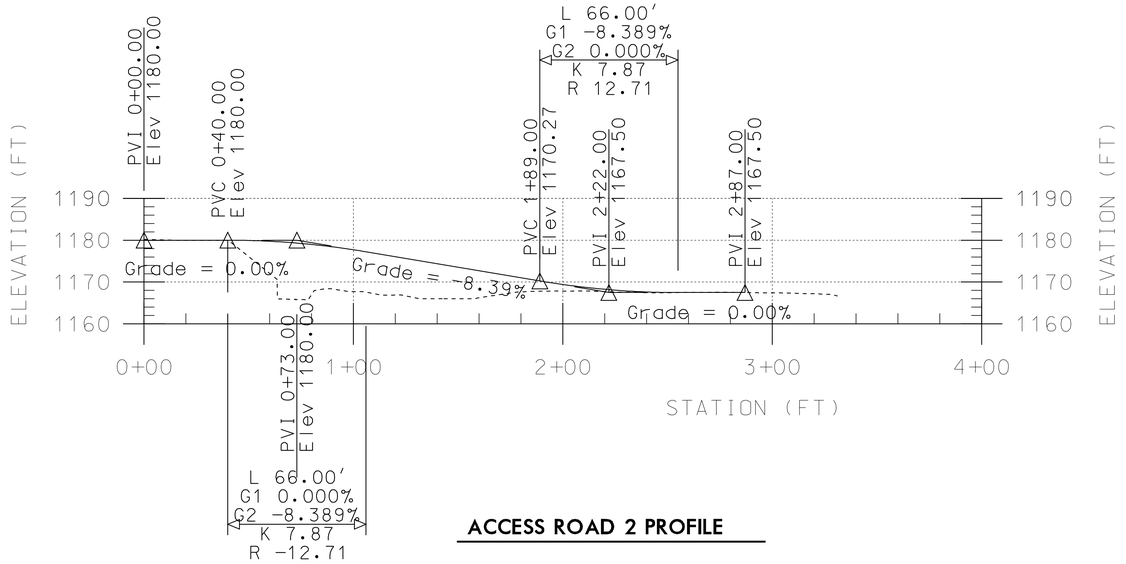

ACCESS ROAD 2 PROFILE

HORIZONTAL SCALE:
1" = 30' 30' 15' 0 30' 60'

VERTICAL SCALE:
1" = 15' 15' 10' 0 15' 30'

GENERAL NOTES:

1. USE 2H:1V SIDESLOPES FOR ROADWAYS (EXCEPT ACCESS ROADS 1 WHICH WILL FEATURE A RETAINING WALL ON ONE ROAD EDGE FOR A PORTION OF THEIR ALIGNMENTS)
2. MINIMUM ROADWAY WIDTH FOR ACCESS ROADS SHALL BE 14'
3. ROADWAY SURFACE SHALL BE GRAVEL WEARING COURSE

LEGEND:

PROPOSED ROAD SURFACE ALONG ℄ OF ROAD.

EXISTING GROUND SURFACE ALONG ℄ OF ROAD.

US Army Corps of Engineers
Seattle District

Symbol	Description	Date	Appr.	Symbol	Description
		/ /			

Designed by: STONE
Drawn by: BARRETT
Checked by: FISCHER
Date: 16 MAR 06
File: E-56-14-19
Rev.

U.S.ARMY ENGINEER DISTRICT,SEATTLE
CORPS OF ENGINEERS
SEATTLE, WASHINGTON
Prepared by:

ADDITIONAL WATER STORAGE PROJECT
HOWARD HANSON DAM
GREEN RIVER WASHINGTON

ROADWAY PLAN AND PROFILES

Plate number:
C-014
Sheet of

DESIGN FILE: J:\ACEDESIGNS\HHAWC\civil\HHAWC-20P01.DGN
DATE AND TIME PLOTTED: 07-AUG-2008 07:47

RESERVED

US Army Corps of Engineers
Seattle District

Symbol	Description	Appr.	Symbol	Date
				/ /

U.S.ARMY ENGINEER DISTRICT,SEATTLE
CORPS OF ENGINEERS
SEATTLE, WASHINGTON

Prepared by:

Designed by: STONE
Drawn by: BARRETT
Checked by: FISCHER

Date: 16 MAR 06
File: E-56-19
Rev.

ADDITIONAL WATER STORAGE PROJECT
HOWARD HANSON DAM

UTILITY PROFILES AND DETAILS

GREEN RIVER WASHINGTON

Plate number:
C-014
Sheet of

DATE AND TIME PLOTTED: 07-AUG-2008 0747 DESIGN FILE: J:\AECDESIGNS\HHAW\Civil\HHAWC-20P02.DGN

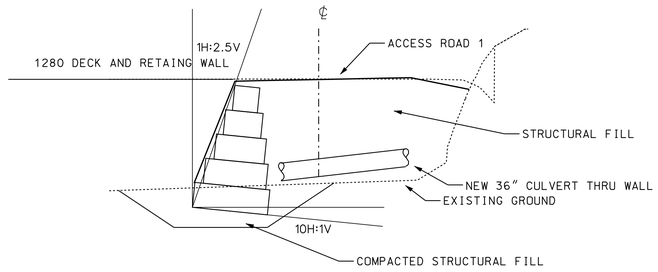

ACCESS ROAD 1 GABION WALL (B) C-301
1H:1V

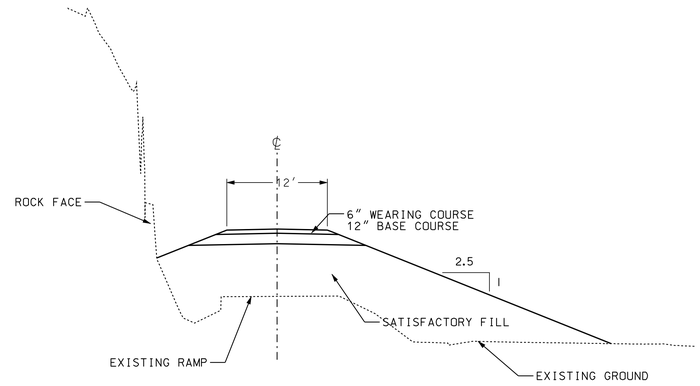

TYPICAL SECTION ACCESS ROAD 2 (A) C-301
1H:1V

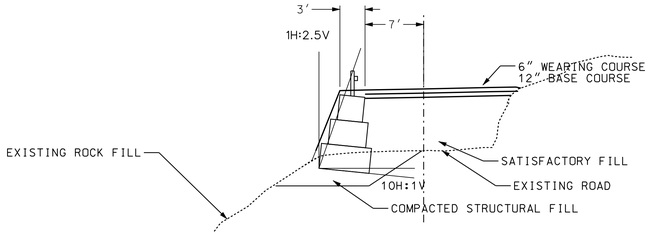

TYPICAL SECTION GABION WALL (B) C-301
1H:1V

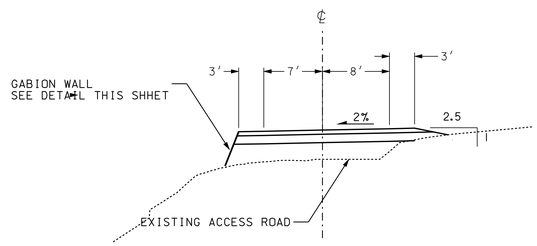

TYPICAL SECTION ACCESS ROAD 1 (E) C-301
1H:1V

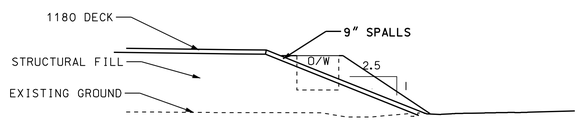

TYPICAL SECTION 1180 DECK (D) C-301
1H:1V

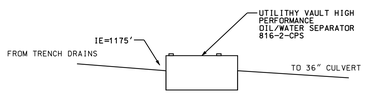

LEGEND

- EXISTING SURFACE
- ACCESS ROAD
- GABION RETAINING WALL STRUCTURE
- CONCRETE RETAINING WALL STRUCTURE

US Army Corps of Engineers
Seattle District

Symbol	Description	Appr.	Date
			/ /

U.S.ARMY ENGINEER DISTRICT,SEATTLE
CORPS OF ENGINEERS
SEATTLE, WASHINGTON
Prepared by:

Designed by: STONE
Drawn by: BARRETT
Checked by: FISCHER
Date: 16 MAR 06
File: E-56-14-19
Rev.

ADDITIONAL WATER STORAGE PROJECT
HOWARD HANSON DAM
ACCESS ROAD 1 CROSS SECTIONS
GREEN RIVER WASHINGTON

Plate number: C-015
Sheet of

DATE AND TIME PLOTTED: 07-AUG-2008 07:48
DESIGN FILE: I:\AECDESIGNS\HHAW\Civil\HHAWC-303C01.DGN

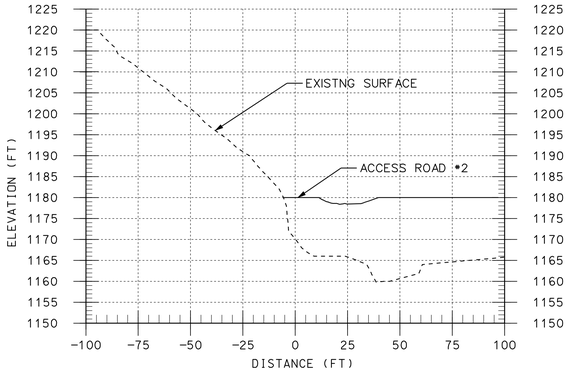

STATION 0+00
SCALE: 1H:2V

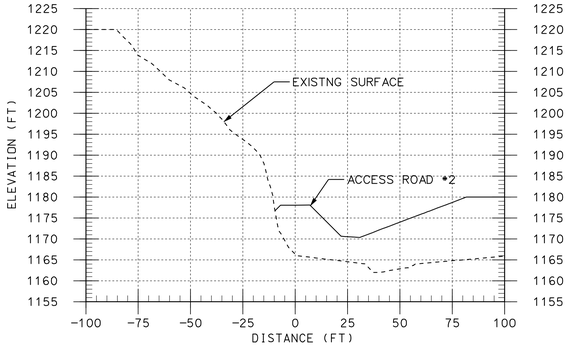

STATION 0+20
SCALE: 1H:2V

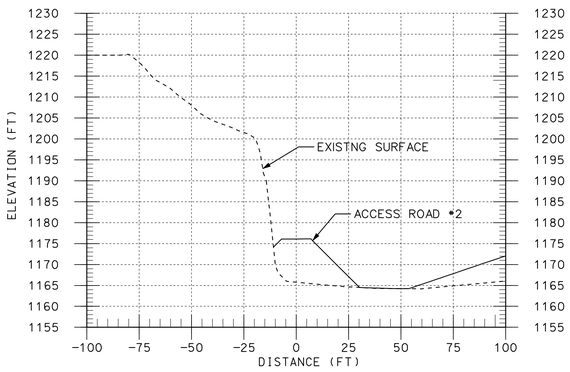

STATION 0+40
SCALE: 1H:2V

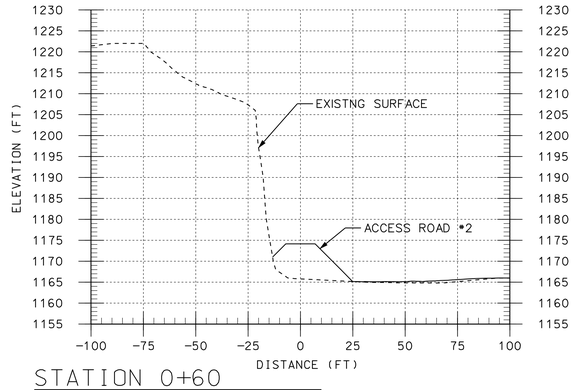

STATION 0+60
SCALE: 1H:2V

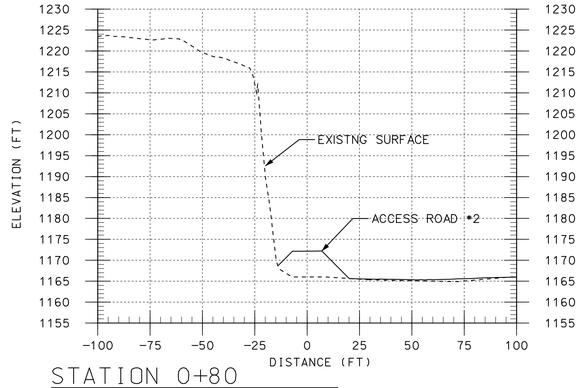

STATION 0+80
SCALE: 1H:2V

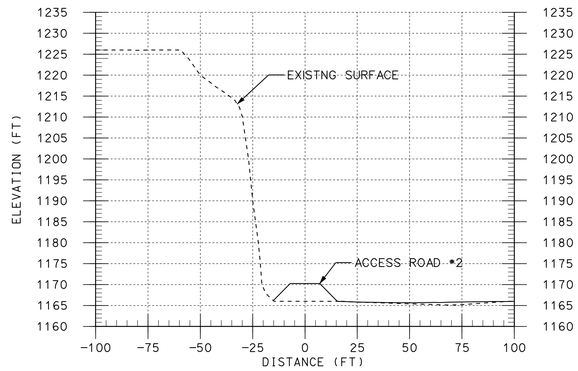

STATION 1+00
SCALE: 1H:2V

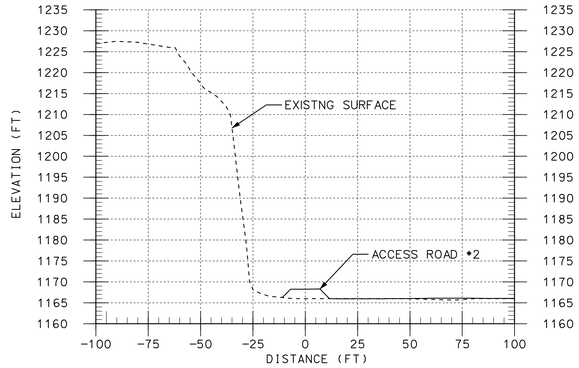

STATION 1+20
SCALE: 1H:2V

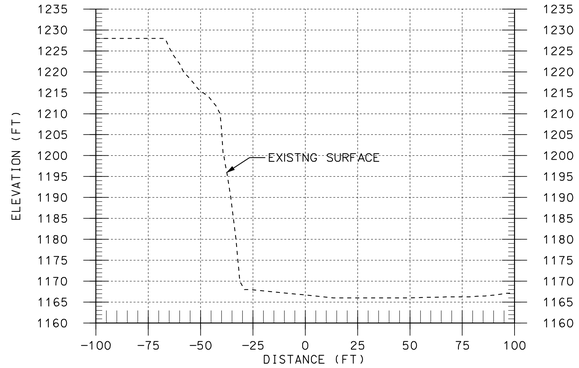

STATION 1+36
SCALE: 1H:2V

LEGEND

--------- EXISTING SURFACE

——— ACCESS ROAD #2

US Army Corps of Engineers
Seattle District

Symbol	Description	Appr.	Date
			/ /

U.S.ARMY ENGINEER DISTRICT SEATTLE
CORPS OF ENGINEERS
SEATTLE, WASHINGTON
Prepared by:

Designed by: STONE
Drawn by: BARRETT
Checked by: FISCHER
Date: 16 MAR 06
File: E-56-14-19
Rev.

ADDITIONAL WATER STORAGE PROJECT
HOWARD HANSON DAM
GREEN RIVER

ACCESS ROAD 2 CROSS SECTIONS

WASHINGTON

Plate number:
C-016
Sheet of

DATE AND TIME PLOTTED: 07-AUG-2008 07:48
DESIGN FILE: I:\AECDESIGNS\HHAW\Civil\HHAWC-303C02.DGN

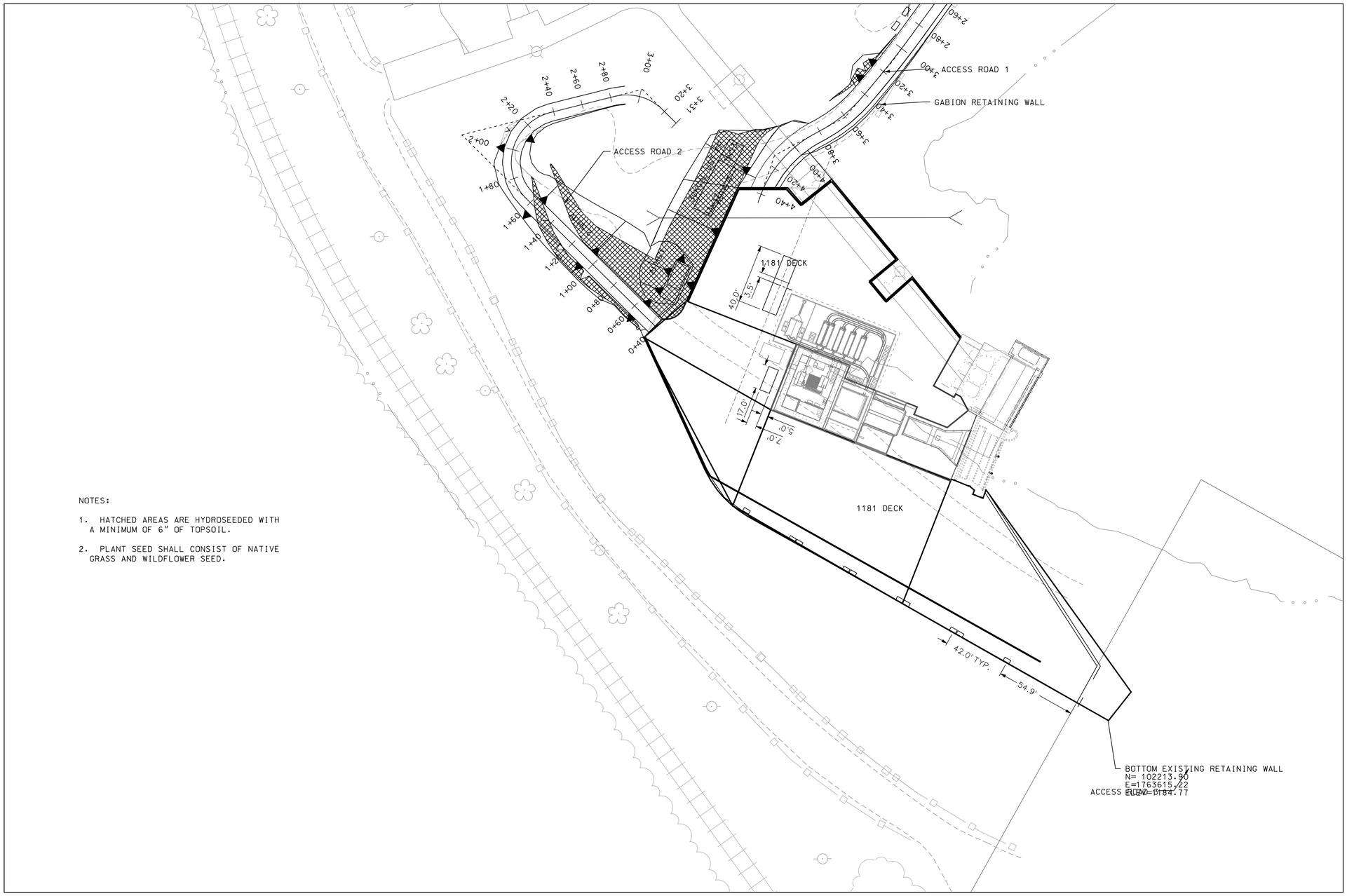

NOTES:

1. HATCHED AREAS ARE HYDROSEEDED WITH A MINIMUM OF 6" OF TOPSOIL.

2. PLANT SEED SHALL CONSIST OF NATIVE GRASS AND WILDFLOWER SEED.

MATCHLINE TO PLATE L-002



N

1" = 30' 30' 15' 0 30' 60'

US Army Corps of Engineers
Seattle District

Symbol	Description	Appr.	Date
			/ /

U.S.ARMY ENGINEER DISTRICT,SEATTLE
CORPS OF ENGINEERS
SEATTLE, WASHINGTON

Designed by: STONE
Drawn by: BARRETT
Checked by: FISCHER
Prepared by:

Date: 16 MAR 06
File: E-56-14-19
Rev.

ADDITIONAL WATER STORAGE PROJECT
HOWARD HANSON DAM

LANDSCAPE PLAN 1

GREEN RIVER WASHINGTON

Plate number: L-001
Sheet of

DATE AND TIME PLOTTED: 04-AUG-2008 14:29
DESIGN FILE: I:\AECDESIGNS\HHAW\Landscape\HHAWL-101L01.DGN

I. DESIGN CRITERIA

ER 1110-1-8158 MCX

ER 1110-2-1806 EARTHQUAKE DESIGN AND EVALUATION OF CIVIL WORKS PROJECTS

ER 1110-2-1150 ENGINEERING AND DESIGN OF CIVIL WORKS PROJECTS

ETL 1110-2-339 SEISMIC DESIGN AND EVALUATION OF INTAKE TOWERS

ETL 1110-9-10 CATHODIC PROTECTION SYSTEMS USING CERAMIC ANODES

EM 1110-2-2000 STANDARD PRACTICE FOR CONCRETE FOR CIVIL WORKS STRUCTURES

EM 1110-2-2400 STRUCTURAL DESIGN OF SPILLWAY AND OUTLET WORKS

EM 1110-2-2104 STRENGTH DESIGN OF REINFORCED CONCRETE HYDRAULIC STRUCTURES

EM 1110-2-2701 VERTICAL LIFT GATES

EM 1110-2-2702 DESIGN OF SPILLWAY TAINTER GATES

EM 1110-2-2105 DESIGN OF HYDRAULIC STEEL STRUCTURES

ASCE 7-98 MINIMUM DESIGN LOADS FOR BUILDINGS AND OTHER STRUCTURES

AASHTO STANDARD SPECIFICATIONS FOR HIGHWAY BRIDGES, 15TH EDITION WITH INTERIM PUBLICATIONS, 1995

2003 IBC INTERNATIONAL BUILDING CODE

ACII 318-95 BUILDING CODE REQUIREMENTS FOR STRUCTURAL CONCRETE

AISC MANUAL OF STEEL CONSTRUCTION LRFD, SECOND EDITION

AWS D1.1 STRUCTURAL WELDING CODE-STEEL

DESIGN MEMORANDUM SUPPLEMENT NO. 26, "EARTHQUAKE ANALYSIS OF HOWARD A. HANSON DAM" SEPTEMBER, 1983

ADDITIONAL WATER STORAGE PROJECT FEASIBILITY REPORT, APPENDIX A, DESIGN.

II. DESIGN LOADS

1) SEISMIC: NON-CRITICAL STRUCTURE:

	ACCELERATION (PGA)A
OPERATING BASIS E.Q. (OBE)	0.15g
MAXIMUM DESIGN E.Q. (MDE)	0.25g

2) WIND: 90 MPH WIND SPEED

3) SNOW/ICE: GROUND SNOW LOAD = 50 PSF. NO ICE LOADING ASSUMED.

4) MITER GATES: 10 FEET MAXIMUM STATIC HEAD DURING NORMAL OPERATIONS

5) INCLINED FISH SCREEN: 10 FEET MAXIMUM STATIC HEAD DURING NORMAL OPERATIONS

6) EMERGENCY GATE: MAXIMUM STATIC HEAD = 212 FEET

7) RADIAL GATE: MAXIMUM STATIC HEAD = 212 FEET
MAXIMUM FLOW VELOCITY = 107 FPS

8) TRASHRACK: MAXIMUM STATIC HEAD = 5 FEET
IMPACT FORCE OF 2 FT X 40 FT LONG LOG TRAVELING AT 2.5 FPS

9) PEDESTRIAN BRIDGE: UNIFORM LIVE LOAD = 85 PSF

10) GANTRY CRANE: TOTAL CRANE SELF-WEIGHT ASSUMED = 135 TONS

LIVE LOADS (WITHOUT IMPACT FACTORS)

CASE 1: LIFTING DEWATERING STOPLOG FROM SLOT	50 TONS (INCLUDING FRICTION)
CASE 2: MAXIMUM STOPLOG/LIFTING BEAM WEIGHT	25 TONS
CASE 3: EMERGENCY GATE SELF-WEIGHT	45 TONS
CASE 4: RESERVOIR DEBRIS LOAD	7.5 TONS

III. CONCRETE

1) ALL CONCRETE SHALL BE MIXED, PROPORTIONED, CONVEYED AND PLACED IN ACCORDANCE WITH THE SPECIFICATIONS.

2) CONCRETE STRENGTH AT 28 DAYS (f'c) SHALL BE: f'c=5000 PSI
ALL NON-SHRINK GROUT f'c=4000 PSI

3) CONSTRUCTION JOINTS SHALL BE LOCATED ONLY AS INDICATED ON THE DRAWINGS UNLESS OTHERWISE APPROVED BY THE COR. ALL CONSTRUCTION JOINTS SHALL BE THOROUGHLY CLEANED AND PROPERLY PREPARED IMMEDIATELY PRIOR TO PLACING OF CONCRETE. ROUGHENED CONSTRUCTION JOINTS SHALL BE ROUGHENED TO APPROXIMATELY 1/4-INCH AMPLITUDE PER ACI REQUIREMENTS. ROUGHENING STRIATIONS SHALL BE SPACED NOT MORE THAN ONE INCH APART.

4) NO BARS PARTIALLY EMBEDDED IN HARDENED CONCRETE SHALL BE FIELD-BENT UNLESS SO DETAILED OR APPROVED BY THE COR.

5) ALL EXPOSED CONCRETE CORNERS SHALL HAVE A $\frac{3}{4}$ INCH CHAMFER, UNLESS NOTED OTHERWISE.

6) REFER TO SPECIFICATIONS FOR DETAILED CONCRETE REQUIREMENTS, INCLUDING TREMIE PROCESSES, AND ADMIXTURE INFORMATION.

7) EXPOSED TO VIEW WALL SURFACES SHALL CONFORM TO CLASS A FORMED FINISH. CLASS C FORMED FINISH SHALL BE USED ON CONCRETE FORMED SURFACES ELSEWHERE UNLESS NOTED OTHERWISE.

8) CONCRETE COVER ON REINFORCING

UNLESS OTHERWISE NOTED, THE FOLLOWING CONCRETE COVER SHALL BE PROVIDED FOR REINFORCEMENT:

STRUCTURAL ELEMENT	COVER
UNFORMED SURFACES IN CONTACT WITH ROCK OR SOIL	4.0 INCHES
FORMED OR SCREEDED SURFACES GREATER THAN 24 INCHES THICK GREATER THAN 12 INCHES UP TO 24 INCHES THICK 12 INCHES AND LESS THICK	 4.0 INCHES 3.0 INCHES ACI 318

IV. REINFORCEMENT

1) REINFORCING STEEL SHALL BE DEFORMED BILLET STEEL CONFORMING TO ASTM A615 AND SHALL BE GRADE 60 (Fy = 60 KSI), UNLESS OTHERWISE NOTED.

2) REINFORCING STEEL TO BE WELDED SHALL BE DEFORMED BILLET STEEL CONFORMING TO ASTM A706, GRADE 60 (Fy = 60 KSI).

3) THREAD BARS AND THREADED BARS SHALL CONFORM TO ASTM A722, 150 KSI ULTIMATE TENSILE STRENGTH, TYPE II (DEFORMED).

4) REINFORCING STEEL SHALL BE DETAILED, INCLUDING HOOKS AND BENDS, IN ACCORDANCE WITH ACI 315 AND ACI 318, LATEST EDITION.

5) ALL LAP-SPLICED REINFORCING BARS SHALL BE SPLICED AS SHOWN ON THE DRAWINGS. UNLESS NOTED OTHERWISE, LAP SPLICE LENGTHS SHALL BE EQUIVALENT TO A "CLASS C" SPLICE (1.7Ld).

6) MECHANICAL BUTT SLICES SHAL DEVELOP 125% OF THE MINIMUM SPECIFIED YIELD STRENGTH OF THE SPLICED BAR. MECHANICAL SPLICES SHALL BE STAGGERED A MINIMUM OF 24 INCHES.

V. HEADED STUDS

HEADED STUDS FOR CONNECTIONS OF STRUCTURAL STEEL TO CONCRETE SHALL BE MANUFACTURED FROM MATERIAL CONFORMING TO AWS D1.1, SECTION 7 FOR CARBON STEEL BASE METAL, AND AWS D1.6, SECTION 7 FOR STAINLESS STEEL BASE METAL, AND SHALL BE WELDED IN CONFORMANCE WITH AWS REQUIREMENTS.

VI. STRUCTURAL STEEL

1) STRUCTURAL STEEL DESIGN, FABRICATION AND ERECTION SHALL BE IN ACCORDANCE WITH THE FOLLOWING APPLICABLE STANDARDS:

AASHTO "STANDARD SPECIFICATIONS FOR HIGHWAY BRIDGES", SIXTEENTH EDITION

AISC "SPECIFICATIONS FOR THE DESIGN, FABRICATION AND ERECTION OF STRUCTURAL STEEL FOR BUILDINGS", LATEST EDITION.

AISC "CODE OF STANDARD PRACTICE FOR STEEL BUILDINGS AND BRIDGES"

AISC "STRUCTURAL JOINTS USING ASTM A325 OR A490 BOLTS"

AWS D1.1-2000 "STRUCTURAL WELDING CODE - STEEL"

2) PLATES, SHAPES, ANGLES, RODS, AND STRUCTURAL MEMBERS SHALL CONFORM TO ASTM A572, Fy = 50 KSI, UNLESS OTHERWISE NOTED. STOPLOGS AND TRASHRACK BEAMS AND COLUMNS SHALL BE FABRICATED FROM THIS STEEL TYPE.

3) STRUCTURAL STEEL FOR TUBE SECTIONS SHALL BE ASTM A500 GRADE B, FY = 46 KSI.

4) STRUCTURAL STEEL FOR PIPE SECTIONS SHALL BE ASTM A53, GRADE B, UNLESS NOTED OTHERWISE.

5) STAINLESS STEEL PLATE AND SHAPES SHALL CONFORM TO ASTM A 276, TYPE 304 UNLESS OTHERWISE NOTED.

6) ANCHOR BOLTS SHALL CONFORM TO ASTM F1554, GRADE 36, STRAIGHT W/HARDENED HVY HEX NUTS AND WASHERS, GALVANIZED PER ASTM A123 AND A153, UNLESS NOTED OTHERWISE.

7) HOLES IN PLATES AND STRUCTURAL MEMBERS SHALL BE DRILLED OR PUNCHED. BURNING OF HOLES SHALL NOT BE PERMITTED.

8) ERECTION SHALL FOLLOW THE APPLICABLE STEEL STANDARDS GIVEN ABOVE.

9) ALL WELDS SHALL BE MADE WITH ELECTRODES OR FILLER ROD WITH A MINIMUM TENSILE STRENGTH OF 70 KSI.

10) ALL BOLTED CONNECTIONS SHALL BE MADE WITH ASTM A325 BOLTS, U.N.O.

VII. WELDING

1) ALL STRUCTURAL STEEL WELDING, WELDING PROCESSES, TECHNIQUES, AND WORKMANSHIP SHALL CONFORM TO THE PROVISIONS OF THE AMERICAN WELDING SOCIETY CODE AWS D1.1-2000 " STRUCTURAL WELDING CODE - STEEL". ELECTRODES AND FILLER METALS SHALL MATCH BASE METALS AS SPECIFIED IN AWS D1.1-2000.

2) ALL STAINLESS STEEL WELDING PROCESSES, TECHNIQUES, AND WORKMANSHIP SHALL CONFORM TO THE PROVISIONS OF THE AMERICAN WELDING SOCIETY CODE AWS D1.6-1999 "STRUCTURAL WELDING CODE - STAINLESS STEEL". ELECTRODES AND FILLER METALS SHALL MATCH BASE METALS AS SPECIFIED IN AWS D1.6-1999.

3) FIELD WELDING SHALL BE BY DIRECT CURRENT. THE TECHNIQUE OF THE WELDING EMPLOYED, THE APPEARANCE AND QUALITY OF WELDS MADE, AND THE METHODS OF CORRECTING DEFECTIVE WORK SHALL CONFORM TO THE REGULATIONS OF THE AMERICAN WELDING SOCIETY. SURFACES TO BE WELDED SHALL BE FREE FROM LOOSE SCALE, RUST, GREASE, PAINT, AND FOREIGN MATERIAL.

4) WELDING IN SHOP AND FIELD SHALL BE EXECUTED BY OPERATORS WHO HAVE BEEN QUALIFIED PREVIOUSLY BY TESTS IN ACCORDANCE WITH THE AMERICAN WELDING SOCIETY "STANDARD QUALIFICATION PROCEDURE" TO PERFORM THE TYPE OF WORK REQUIRED.

5) ALL FILLET WELDS SHALL BE 1/4 INCH MINIMUM UNLESS NOTED OTHERWISE. ALL GROOVE WELDS SHALL BE COMPLETE PENETRATION UNLESS NOTED OTHERWISE. ALL WELDING SHALL BE PERFOMED BY WEDLERS CERTIFIED IN ACCORDANCE WITH AWS.

6) UNLESS NOTED OTHERWISE, WELDED STEEL CONNECTIONS SHALL BE WELDED ALL AROUND WHERE POSSIBLE, USING E70XX ELECTRODES, FILLET OR COMPLETE PENETRATION BUTT OR GROOVE WELDS.

VIII. OTHER NOTES

1) THE CONTRACTOR SHALL FIELD VERIFY ALL EXISTING CONDITIONS INFORMATION SHOWN ON THE CONTRACT DOCUMENTS. IF ANY SIGNIFICANT DEVIATIONS ARE DISCOVERED, THE COR SHALL BE NOTIFIED IMMEDIATELY.

2) SEE THE SPECIFICATIONS FOR FURTHER DETAILED INFORMATION.

3) ALL ACTIONS NOTED ON THIS DRAWING ARE REQUIRED TO BE CARRIED OUT BY THE CONTRACTOR, UNLESS NOTED OTHERWISE. ALL COMMUNICATIONS AS CALLED FOR ON THIS DRAWING SHALL BE DIRECTLY WITH THE COR, UNLESS NOTED OTHERWISE.

4) THE EXISTING AS-BUILT DWGS INDICATE THAT THE EXISTING TRASH REMOVAL DECK AT EL. 1140 IS DESIGNED TO CARRY A 25-TON TRUCK CRANE HANDLING 15 TONS @ 17-FOOT RADIUS.

5) THE EXISTING AS-BUILT DWGS INDICATE THAT THE EXISTING TOWER ACCESS BRIDGE IS DESIGNED TO SUPPORT AN AASHTO H20 TRUCK LOAD.

6) THE MAXIMUM POOL ELEVATION DURING SCHEDULED MAINTENANCE IS EL 1169.

7) MAXIMUM HEAD DIFFERENTIAL BETWEEN RESERVOIR AND WET WELL DURING NORMAL OPERATION IS 10 FEET.

US Army Corps of Engineers
Seattle District

Symbol	Description
Appr.	
/ / Date	

U.S.ARMY ENGINEER DISTRICT,SEATTLE
CORPS OF ENGINEERS
SEATTLE, WASHINGTON
Prepared by:

Designed by: X
Drawn by: X
Checked by: X
Date: 16 MAR 06
File # E-56-14-19
Rev.

ADDITIONAL WATER STORAGE PROJECT
HOWARD HANSON DAM
GREEN RIVER WASHINGTON

STRUCTURAL NOTES

Plate number: S-001
Sheet of

I:\ACCDesigns\HAW\Structural\HAWS-0s-001.DGN
DESIGN FILE:
11:41:39 AM
DATE AND TIME PLOTTED: 8/6/2008

ABBREVIATIONS

&	AND
@	AT
AB	ANCHOR BOLT
ABT	ABOUT
ALUM	ALUMINUM
ASSY	ASSEMBLY
ASTM	AMERICAN SOCIETY FOR TESTING MATERIAL
AWC	ATTRACTION WATER CONDUIT
BOTT	BOTTOM
B/O	BOTTOM OF
CL	CENTERLINE
CJ	CONSTRUCTION JOINT
CLR	CLEAR
CONC	CONCRETE
CONT	CONTINUOUS
CU	CUBIC
CY	CUBIC YARDS
DIA, ø	DIAMETER
DN	DOWN
DWG	DRAWING
EA	EACH
EF	EACH FACE
EJ	EXPANSION JOINT
EL	ELEVATION
ELEC	ELECTRICAL
ELEV	ELEVATOR
E/O	END OF
EQ	EQUAL
ES	EACH SIDE
EW	EACH WAY
EXIST	EXISTING
EXP	EXPANSION
FB	FLAT BAR
FS	FAR SIDE
FT	FOOT, FEET
FTG	FOOTING
GALV	GALVANIZED
HORIZ	HORIZANTAL
HSB	HIGH STRENGTH BOLT
HSS	HOLLOW STRUCTURAL SECTION
HT	HEIGHT
ID	INSIDE DIAMETER
IFS	INCLINED FISH SCREEN
INFO	INFORMATION
JT	JOINT
KSI	KIPS PER SQUARE INCH
L	LENGTH, ANGLE
LB OR	POUND
LNG	LONG
MAX	MAXIMUM
MB	MACHINE BOLT
MECH	MECHANICAL
MFG	MANUFACTURING
MIN	MINIMUM
MISC	MISCELLANEOUS
NIC	NOT IN CONTRACT
NS	NEAR SIDE
OC	ON CENTER
OD	OUTSIDE DIAMETER
OPNG	OPENING
PL	PLATE
PREP	PREPARTION
PSF	POUNDS PER SQUARE FOOT
PSI	POUNDS PER SQUARE INCH
QTY	QUANTITY
R	RADIUS
REINF	REINFORCING
REQ'D	REQUIRED
RMS	ROOT MEAN SQUARE
SCH, SCHED	SCHEDULE
SIM	SIMILAR
SP, SPA	SPACE, SPACING, SPACES
SPEC	SPECIFICATION
SPL	SPLICE
SQ	SQUARE
STA	STATION
STD	STANDARD
STL	STEEL
SYMM	SYMMETRICAL
T&B	TOP AND BOTTOM
T/O	TOP OF
THRU	THROUGH
TOS	TOP OF STEEL
TYP	TYPICAL
UNO	UNLESS NOTED OTHERWISE
VERT	VERTICAL
W	WIDE FLANGE
W/	WITH
W/O	WITHOUT
WP	WORKING POINT
WS	WATERSTOP

REINFORCING BAR SCHEDULES

TENSION LAP SPLICE LENGTHS OF GRADE 60 UNCOATED BARS - CLASS B

BAR SIZE	f'c = 3000 psi		f'c = 4000 psi		f'c = 5000 psi		f'c = 6000 psi	
	TOP BARS	OTHERS	TOP BARS	OTHERS	TOP BARS	OTHERS	TOP BARS	OTHERS
#3	2'-0"	2'-0"	2'-0"	2'-0"	2'-0"	2'-0"	2'-0"	2'-0"
#4	2'-0"	2'-0"	2'-0"	2'-0"	2'-0"	2'-0"	2'-0"	2'-0"
#5	2'-4"	2'-0"	2'-4"	2'-0"	2'-4"	2'-0"	2'-4"	2'-0"
#6	2'-11"	2'-1"	2'-9"	2'-0"	2'-9"	2'-0"	2'-9"	2'-0"
#7	4'-0"	2'-11"	3'-6"	2'-6"	3'-3"	2'-4"	3'-3"	2'-4"
#8	5'-3"	3'-9"	4'-7"	3'-3"	4'-11"	2'-11"	3'-9"	2'-8"
#9	6'-8"	4'-9"	5'-9"	4'-2"	5'-2"	3'-9"	4'-9"	3'-5"
#10	8'-6"	6'-1"	7'-4"	5'-3"	6'-7"	4'-8"	6'-0"	4'-4"
#11	10'-5"	7'-5"	9'-0"	6'-5"	8'-1"	5'-9"	7'-4"	5'-3"
#14	LAP SPLICE NOT ALLOWED	LAP SPLICE NOT ALLOWED	LAP SPLICE NOT ALLOWED	LAP SPLICE NOT ALLOWED	LAP SPLICE NOT ALLOWED	LAP SPLICE NOT ALLOWED	LAP SPLICE NOT ALLOWED	LAP SPLICE NOT ALLOWED
#18								

NOTE:

MECHANICAL COUPLERS MAY BE USED FOR SPLICES IN REBAR. SEE SPECIFICATIONS FOR MECHANICAL COUPLER REQUIREMENTS.

TENSION DEVELOPMENT LENGTH OF UNCOATED DEFORMED BARS

BAR SIZE	f'c = 3000 psi		f'c = 4000 psi		f'c = 5000 psi		f'c = 6000 psi	
	TOP BARS	OTHERS	TOP BARS	OTHERS	TOP BARS	OTHERS	TOP BARS	OTHERS
#3	1'-5"	1'-0"	1'-5"	1'-0"	1'-5"	1'-0"	1'-5"	1'-0"
#4	1'-5"	1'-0"	1'-5"	1'-0"	1'-5"	1'-0"	1'-5"	1'-0"
#5	1'-9"	1'-3"	1'-9"	1'-3"	1'-9"	1'-3"	1'-9"	1'-3"
#6	2'-3"	1'-8"	2'-2"	1'-6"	2'-2"	1'-6"	2'-2"	1'-6"
#7	3'-1"	2'-3"	2'-8"	1'-11"	2'-6"	1'-9"	2'-6"	1'-9"
#8	4'-1"	2'-11"	3'-6"	2'-6"	3'-2"	2'-3"	2'-11"	2'-1"
#9	5'-2"	3'-8"	4'-6"	3'-2"	4'-0"	2'-10"	3'-8"	2'-7"
#10	6'-6"	4'-8"	5'-8"	4'-1"	5'-1"	3'-8"	4'-8"	3'-4"
#11	8'-0"	5'-9"	6'-11"	5'-0"	6'-3"	4'-5"	5'-8"	4'-1"
#14	10'-11"	7'-10"	9'-5"	6'-9"	8'-5"	6'-1"	7'-9"	5'-6"
#18	14'-1"	10'-1"	12'-3"	8'-9"	10'-11"	7'-10"	10'-0"	7'-2"

RECOMMENDED END HOOKS
ALL GRADES
D = FINISHED BEND DIAMETER

BAR SIZE	D	180° HOOKS		90° HOOKS
		A OR G	J	A OR G
#3	2 1/4"	5"	3"	6"
#4	3	6"	4"	8"
#5	3 3/4"	7"	5"	10"
#6	4 1/2"	8"	6"	1'-0"
#7	5 1/4"	10"	7"	1'-2"
#8	6"	11"	8"	1'-4"
#9	9 1/2"	1'-3"	11 3/4"	1'-7"
#10	10 3/4"	1'-5"	1'-1-1/4"	1'-10"
#11	12"	1'-7"	1'-2-3/4"	2'-0"
#12	18 1/4"	2'-3"	1'-9 3/4"	2'-7"
#13	24"	3'-0"	2'-4 1/2"	3'-5"

STIRRUP AND TIE HOOK DIMENSION
ALL GRADES

BAR SIZE	D	135° HOOKS	
		HOOK A OR G	H APPROX
#3	1 1/2"	4 1/4"	3"
#4	2"	4 1/2"	3"
#5	2 1/2"	5 1/2"	3 3/4"
#6	4 1/2"	8"	4 1/2"
#7	5 1/4"	9"	5 1/4"
#8	6"	10 1/2"	6"

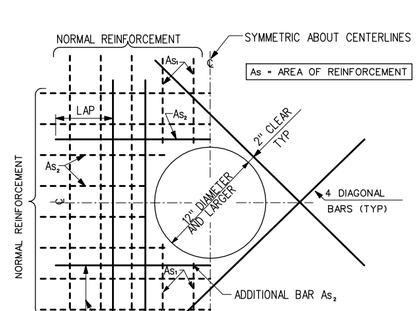

NOTES:

1. CUT NORMAL REINFORCEMENT AT OPENINGS: As_1 AND As_2 = ½ AREA OF CUT BARS TO BE ADDED ON EACH SIDE OF OPENING
2. ADDITIONAL BARS As_1 AND As_2 TO BE PLACED:
   A) AT CENTERLINE OF WALLS OR SLABS WHERE ONE LAYER OF REINFORCEMENT IS PROVIDED
   B) AT EACH FACE OF WALLS OR SLABS WHERE TWO LAYERS OF REINFORCEMENT ARE PROVIDED
3. INCREASE SIZE OF ADDITIONAL BARS AS NEEDED TO FIT WITHIN A DISTANCE OF 2 X WALL/SLAB THICKNESS FROM OPENING, PROVIDE 2" MIN CLEAR BETWEEN BARS
4. THIS DETAIL TO BE USED ONLY WHEN NO OTHER DETAIL IS INDICATED ON THE DRAWINGS
5. WHERE A SLAB OR INTERSECTING WALL CONNECTS WITHIN ONE WALL THICKNESS OF THE OPENING, ADDITIONAL BARS ON THAT SIDE MAY BE OMITTED

ADDITIONAL REINFORCEMENT AT CIRCULAR OPENING 12" DIA OR LARGER

NOT TO SCALE

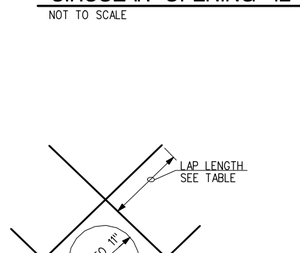

NOTES:

1. CUT NORMAL REINFORCEMENT 2" CLEAR OF OPENING
2. DIAGONAL BARS TO BE PLACED:
   A) AT CENTERLINE OF WALL OR SLAB WHERE ONE LAYER OF REINFORCEMENT IS PROVIDED
   B) AT EACH FACE OF WALL OR SLAB WHERE TWO LAYERS OF REINFORCEMENT ARE PROVIDED
3. UNLESS OTHERWISE NOTED, SIZE OF DIAGONAL BARS SHALL BE THE SIZE OF THE LARGEST NORMAL REINFORCING BAR CUT
4. THIS DETAIL TO BE USED WHEN CALLED FOR ON THE DRAWINGS OR WHEN NO OTHER DETAIL IS SPECIFIED.
5. HOLES LESS THAN 7 INCHES IN DIAMETER MAY BE CORE DRILLED.

ADDITIONAL REINFORCEMENT AT CIRCULAR OPENING 7" TO 11" DIA

NOT TO SCALE

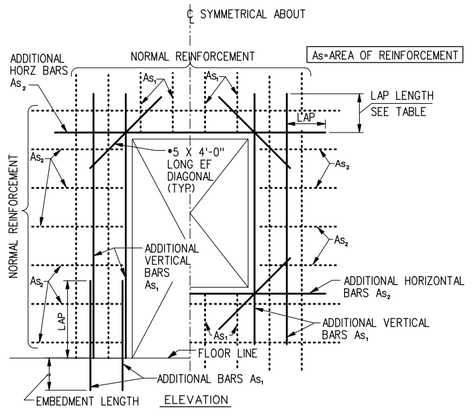

NOTES:

1. CUT NORMAL REINFORCEMENT AT OPENING: As_1 AND As_2 = ½ AREA OF CUT BARS TO BE ADDED ON EACH SIDE OF OPENING.
2. ADDITIONAL BARS As_1 AND As_2 TO BE PLACED:
   A) AT CENTERLINE OF WALLS OR SLABS WHERE ONE LAYER OF REINFORCEMENT IS PROVIDED.
   B) AT EACH FACE OF WALLS OR SLABS WHERE TWO LAYERS OF REINFORCEMENT ARE PROVIDED.
3. INCREASE SIZE OF ADDITIONAL BARS AS NEEDED TO FIT WITHIN A DISTANCE OF 2 X WALL/SLAB THICKNESS FROM OPENING. PROVIDE 2" MIN CLEAR BETWEEN BARS.
4. THIS DETAIL TO BE USED ONLY WHEN NO OTHER DETAIL IS INDICATED ON THE DRAWINGS.
5. WHERE A SLAB OR INTERSECTING WALL CONNECTS WITHIN ONE WALL THICKNESS OF THE OPENINGS, ADDITIONAL BARS ON THAT SIDE MAY BE OMITTED.

ADDITIONAL REINFORCEMENT AROUND RECTANGULAR OPENINGS

NOT TO SCALE

US Army Corps of Engineers
Seattle District

Symbol	Description	Appr.	Date
			/ /

Date: 16 MAR 06
File #: E-56-14-19
Rev:

Designed by: X
Drawn by: X
Checked by: X

U.S. ARMY ENGINEER DISTRICT, SEATTLE
CORPS OF ENGINEERS
SEATTLE, WASHINGTON
Prepared by:

ADDITIONAL WATER STORAGE PROJECT
HOWARD HANSON DAM
GREEN RIVER WASHINGTON

STRUCTURAL LEGEND

Plate number:
S-002
Sheet of

DESIGN FILE: I:\AEC\Designs\HHAW\Structural\HHAWS-08-002.DGN
DATE AND TIME PLOTTED: 8/6/2008 11:41:55 AM

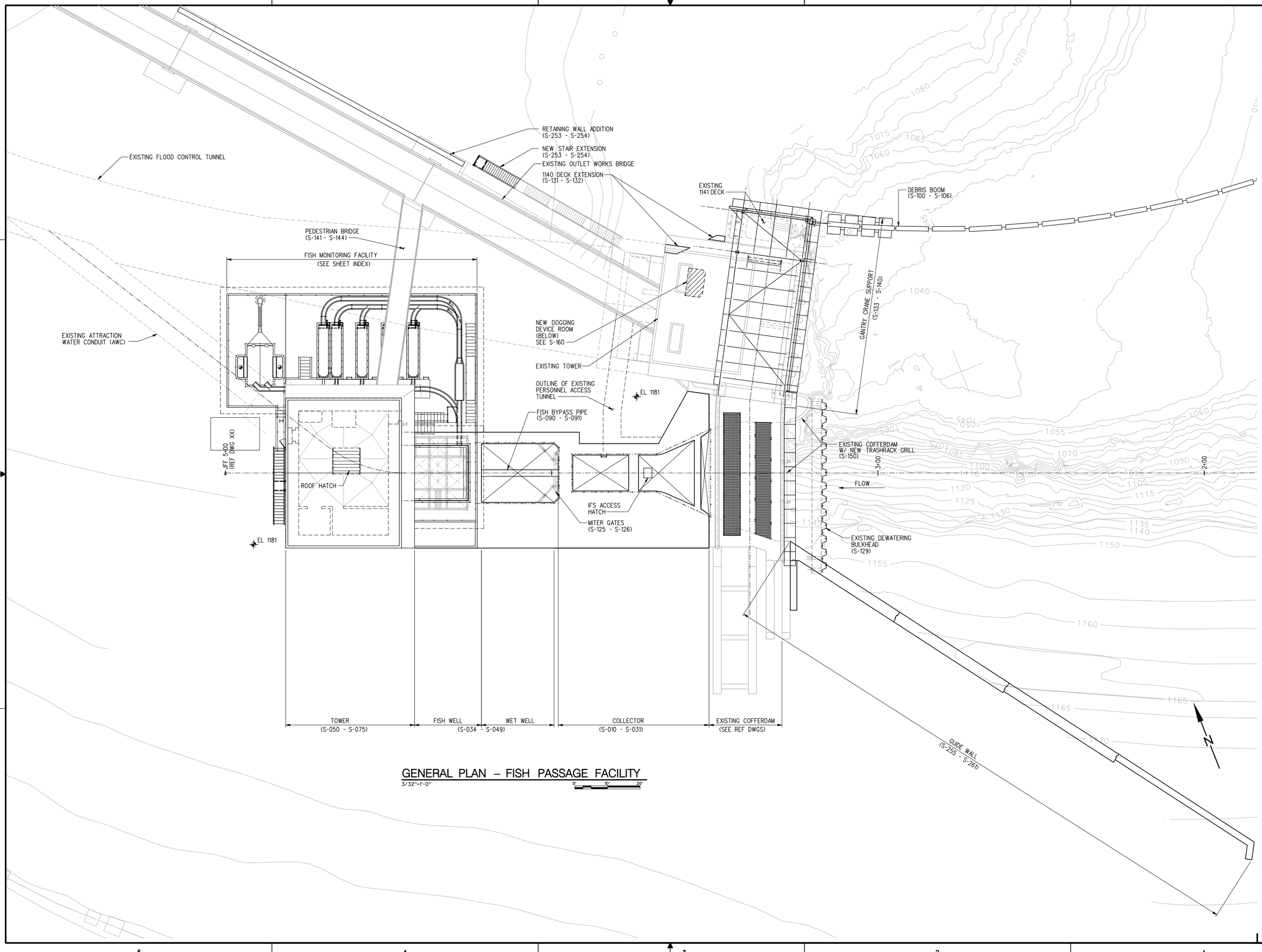

GENERAL PLAN – FISH PASSAGE FACILITY

3/32"=1'-0" 0' 10' 20'

US Army Corps of Engineers
Seattle District

Symbol	Description	Appr.	Symbol	Date	Description
				/ /	

Date: 16 MAR 06
File #
E-56-14-19
Rev.

Designed by: X
Drawn by: X
Checked by: X

U.S.ARMY ENGINEER DISTRICT,SEATTLE
CORPS OF ENGINEERS
SEATTLE, WASHINGTON
Prepared by:

ADDITIONAL WATER STORAGE PROJECT
HOWARD HANSON DAM
GENERAL PLAN
FISH PASSAGE FACILITY
GREEN RIVER WASHINGTON

Plate number:
S-003
Sheet of

I:\AEC\Designs\HHAW\Structural\HHAWS-0s-003.DGN
DESIGN FILE:
11:42:18 AM
DATE AND TIME PLOTTED: 8/6/2008

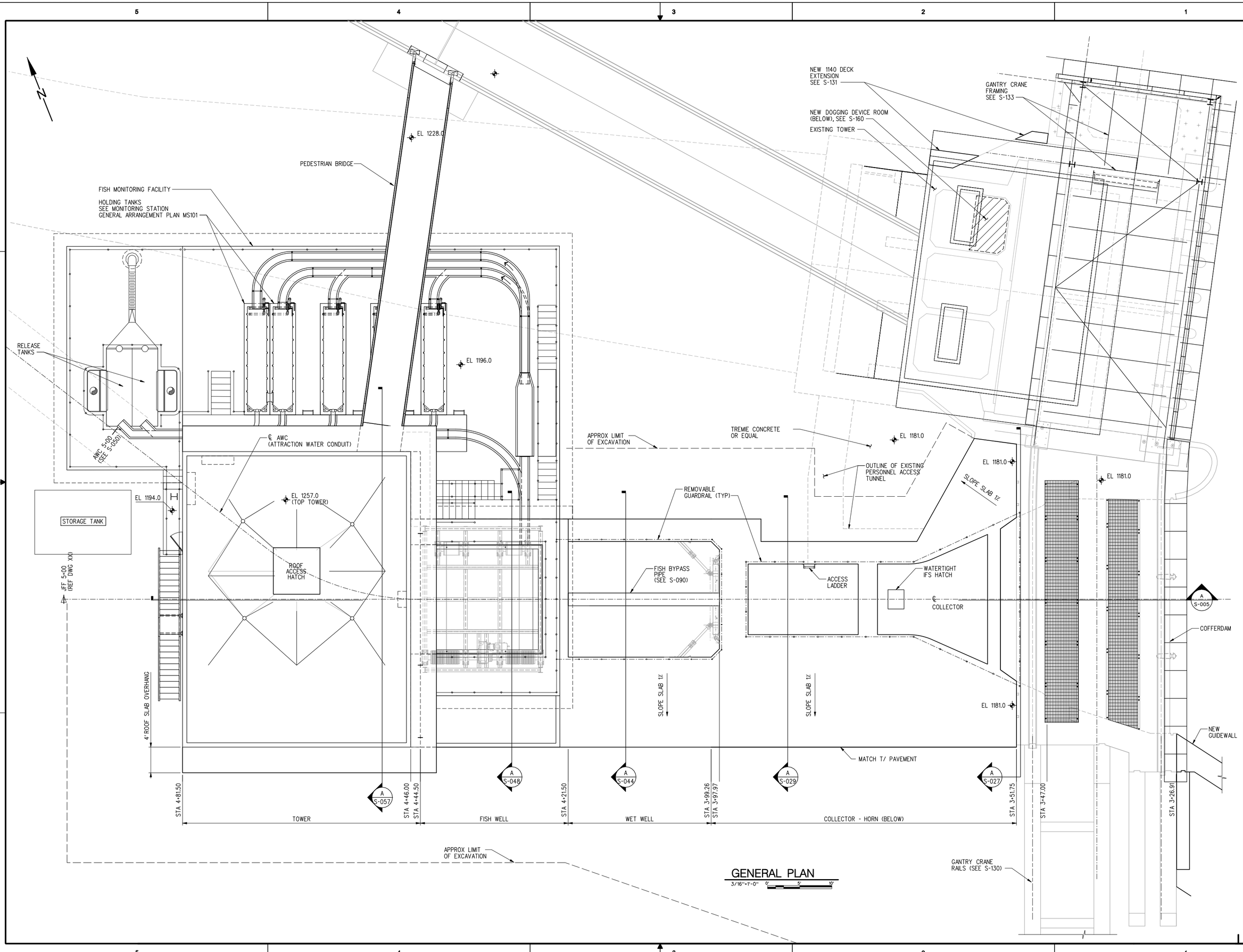

GENERAL PLAN
3/16"=1'-0"

US Army Corps of Engineers
Seattle District

Symbol	Description	Date	Appr.	Symbol	Description

Designed by: X
Drawn by: X
Checked by: X
Date: 16 MAR 06
File # E-56-14-19
Rev.

U.S. ARMY ENGINEER DISTRICT, SEATTLE
CORPS OF ENGINEERS
SEATTLE, WASHINGTON
Prepared by:

ADDITIONAL WATER STORAGE PROJECT
HOWARD HANSON DAM
OVERALL FACILITY PLAN
GREEN RIVER WASHINGTON

Plate number:
S-004
Sheet of

DATE AND TIME PLOTTED: 8/6/2008 11:42:39 AM DESIGN FILE: I:\AECDesigns\HHAW\Structural\HHAWS-0s-004.DGN

NOTES:

1. INCLINED FISH SCREEN ASSEMBLY INCLUDING HYDRAULIC ACTUATORS FOR COLLECTOR #1, #2, AND #5 WILL BE PROVIDED IN A FUTURE CONTRACT.

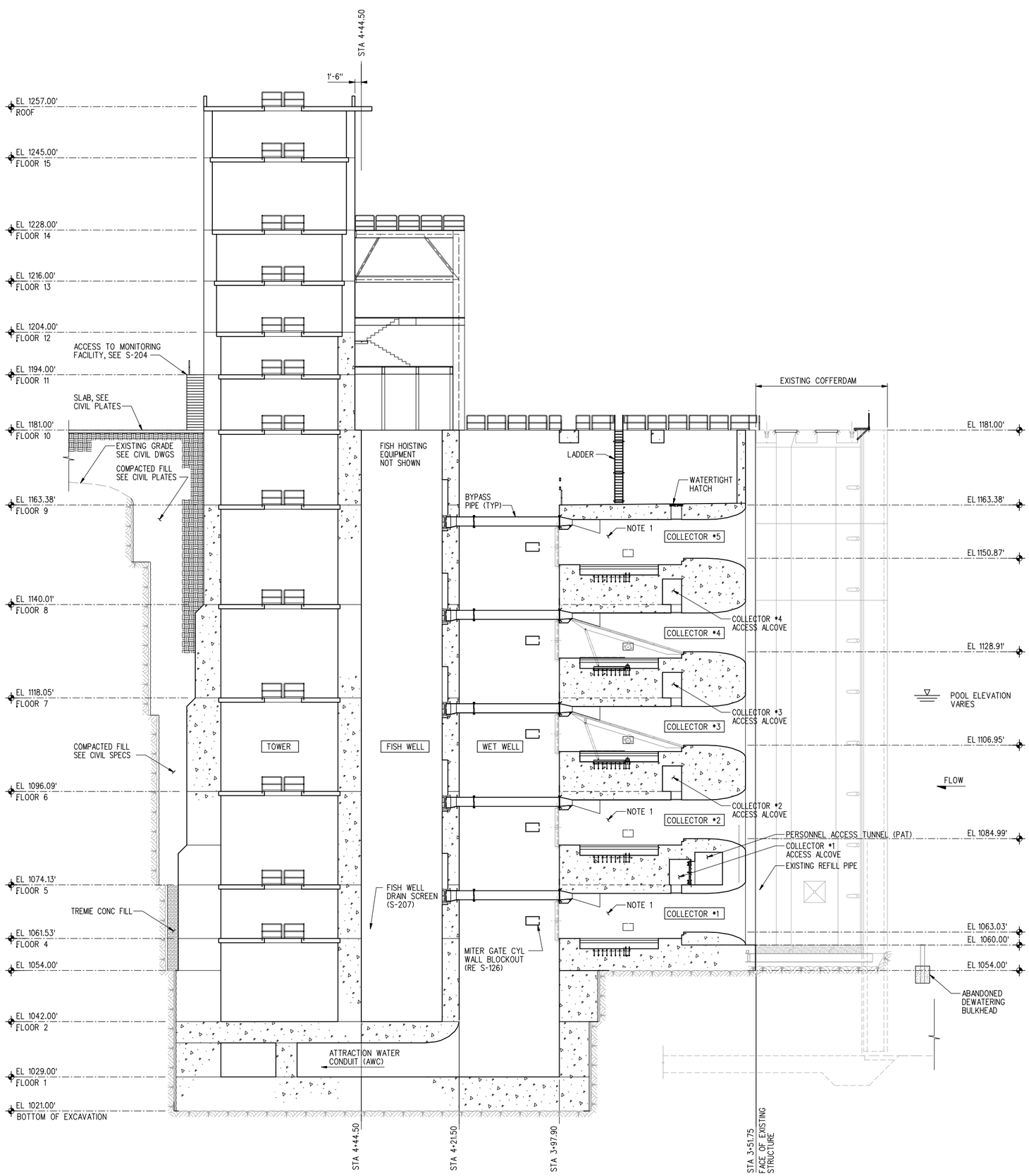

A CENTERLINE PROFILE SECTION
3/32"=1'-0"
0' 10' 20'

US Army Corps of Engineers
Seattle District

Symbol	Description
Appr.	
Date	/ /

Designed by:	X
Drawn by:	X
Checked by:	X
Date:	16 MAR 06
File #	E-56-14-19
Rev.	

U.S.ARMY ENGINEER DISTRICT,SEATTLE
CORPS OF ENGINEERS
SEATTLE, WASHINGTON
Prepared by:

ADDITIONAL WATER STORAGE PROJECT
HOWARD HANSON DAM
GREEN RIVER WASHINGTON

FACILITY SECTION

Plate number:
S-005
Sheet of

DESIGN FILE: F:\AECDesigns\HHAW\Structural\HHAWS-05-005.DGN
DATE AND TIME PLOTTED: 8/6/2008 11:42:58 AM

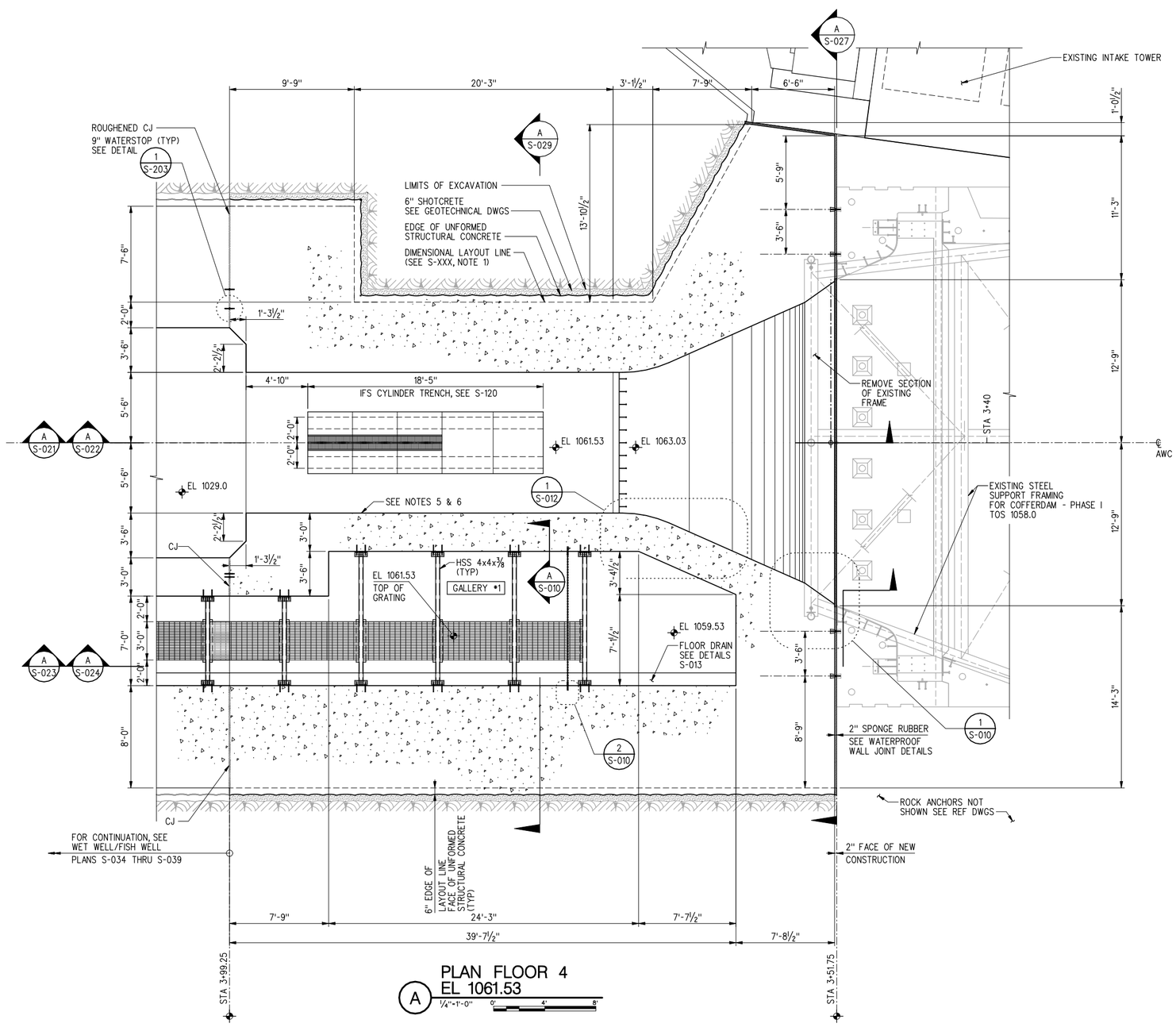

PLAN FLOOR 4
EL 1061.53

A 1/4"=1'-0" 0' 4' 8'

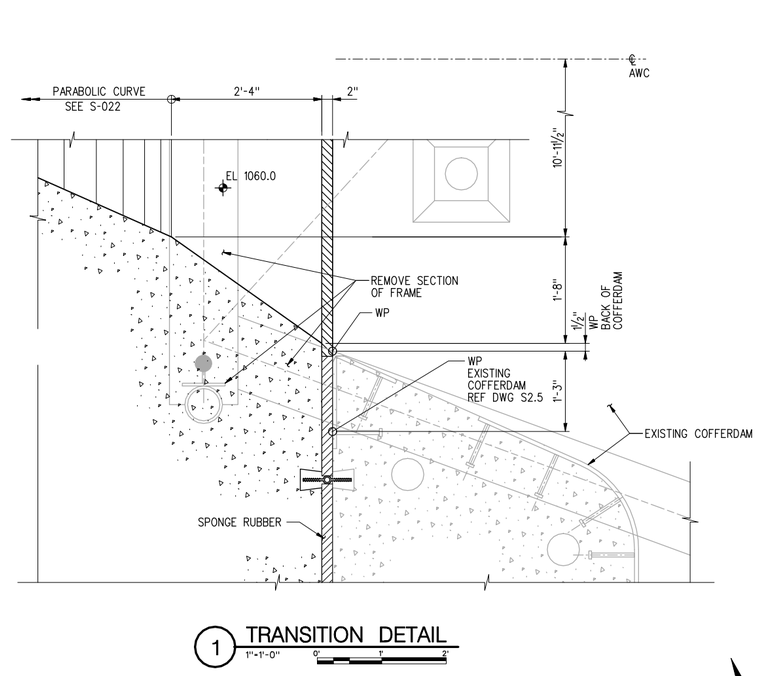

1 TRANSITION DETAIL

1"=1'-0" 0' 1' 2'

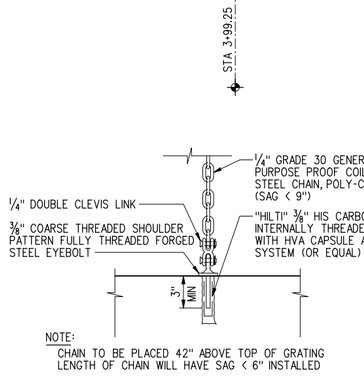

2 CHAIN DETAIL

2"=1'-0" 0' 6" 1'

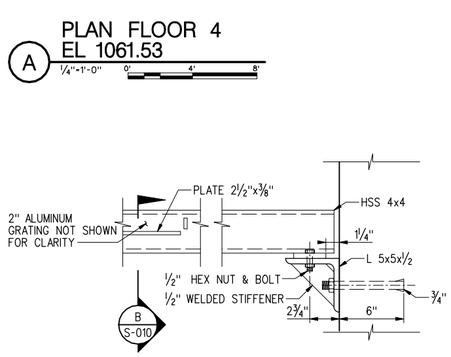

A SECTION

2"=1'-0" 0' 6" 1'

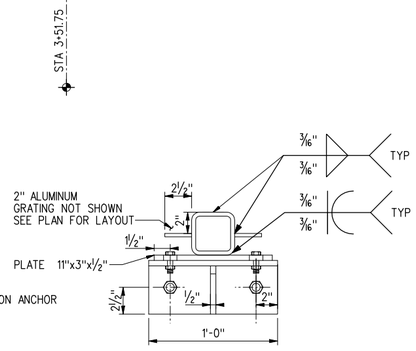

B SECTION

2"=1'-0" 0' 6" 1'

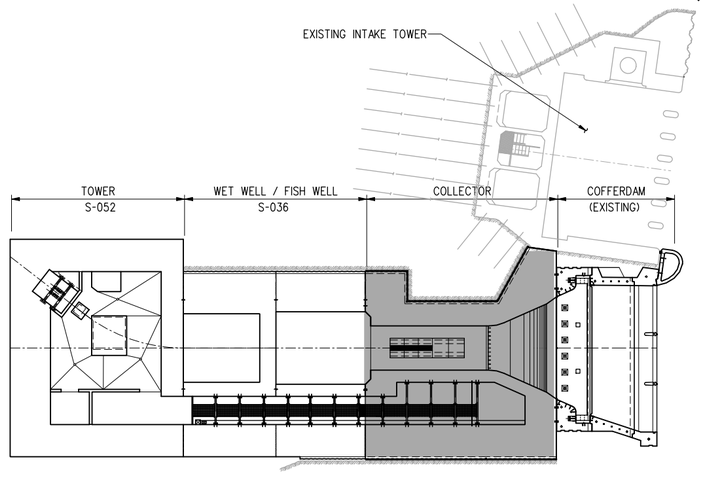

KEY PLAN

NOTES:

1. CONCRETE DIMENSIONS SHOWN ARE CONSISTENT WITH STRUCTURAL DESIGN REQUIREMENTS. ACTUAL GEOMETRY AND WALL THICKNESS MAY VARY WHEN CAST AGAINST UNFORMED EDGE OF EXCAVATION.
2. GEOTECHNICAL ROCK ANCHORS ARE NOT SHOWN. SEE PHASE II, EXCAVATION AND TUNNELING FOR SHOTCRETE AND ROCK SUPPORT DETAIL REQUIREMENTS.
3. FOR REINFORCING, SEE PLATE NO. S-020.
4. FOR GENERAL STRUCTURAL NOTES, SEE S-001.
5. SEE PLATE NO. S-025 FOR GUIDE WALL GEOMETRY.
6. SEE PLATE NO S-025 FOR EMBED PLATE BLOCKOUT DETAILS.
7. ALUMINUM GRATING SHALL HAVE A MINIMUM SECTION MODULUS OF 0.845 IN^3. DEPTH OF GRATING SHALL BE 2" WITH THE TOP OF GRATING FLUSH WITH THE TOP OF THE HSS 4x4 WHEN BEARING ON THE GRATING SUPPORT.

US Army Corps of Engineers
Seattle District

Symbol	Description	Appr.	Date
			/ /

Date: 16 MAR 06
File #: E-56-14-19
Rev.
Designed by:
Drawn by:
Checked by:
Prepared by:

U.S. ARMY ENGINEER DISTRICT, SEATTLE
CORPS OF ENGINEERS
SEATTLE, WASHINGTON

ADDITIONAL WATER STORAGE PROJECT
HOWARD HANSON DAM
COLLECTOR PLAN AT
EL 1063.50
GREEN RIVER WASHINGTON

Plate number:
S-010
Sheet of

DESIGN FILE: I:\AEC\Designs\HHAWS\Structural\HHAWS_ts-010.DGN
DATE AND TIME PLOTTED: 8/6/2008 11:43:43 AM

NOTES:

1. SEE SHEET S-070 FOR TYPICAL SLAB PENETRATION DETAILS FOR THE UTILITY CHASE AND TOWER GRATING
2. FOR REINFORCING, SEE PLATE NO. S-019
3. SEE ARCHITECTURAL DRAWINGS FOR STAIR DETAILS.

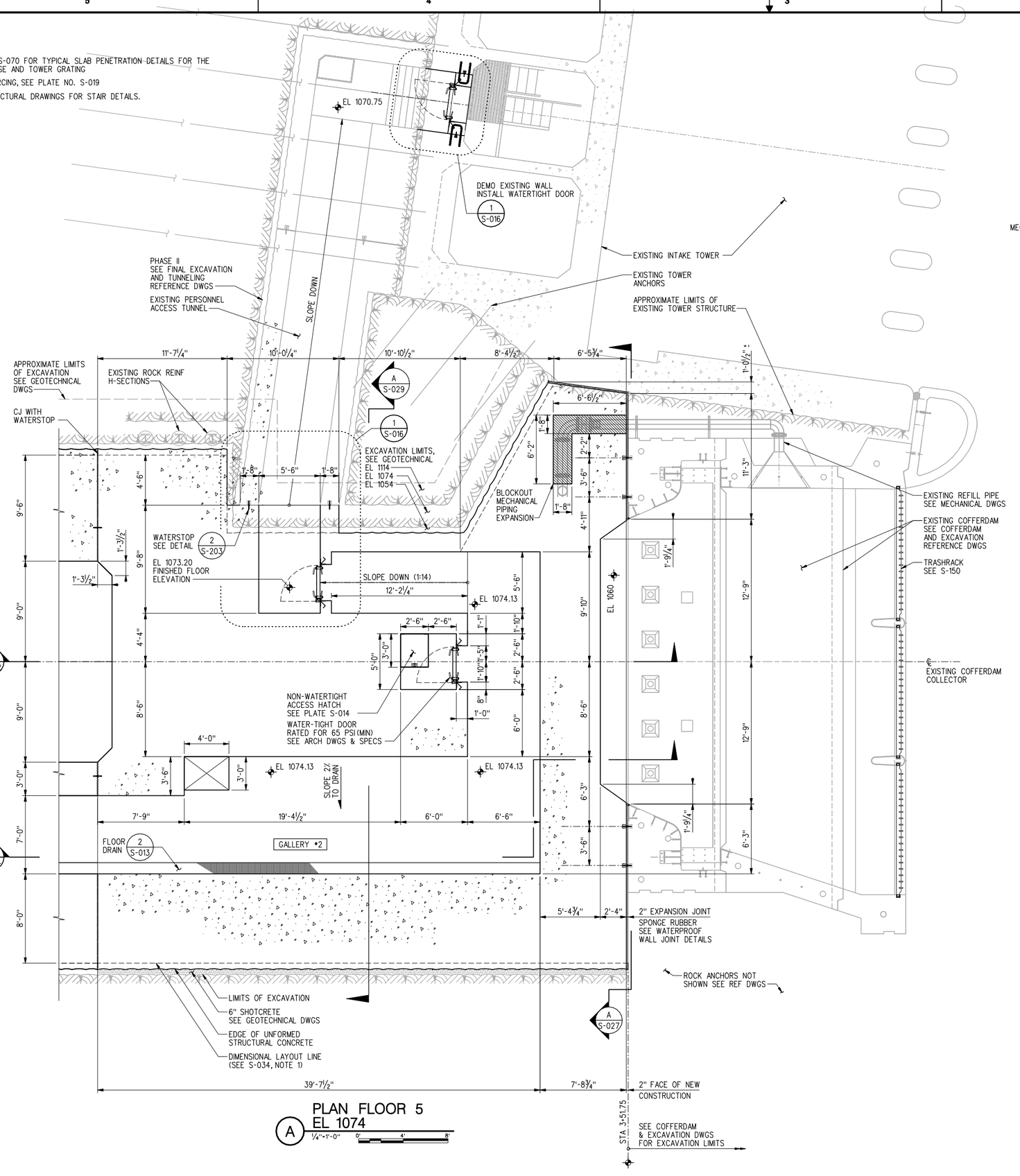

PLAN FLOOR 5 EL 1074

A 1/4"=1'-0" 0' 4' 8'

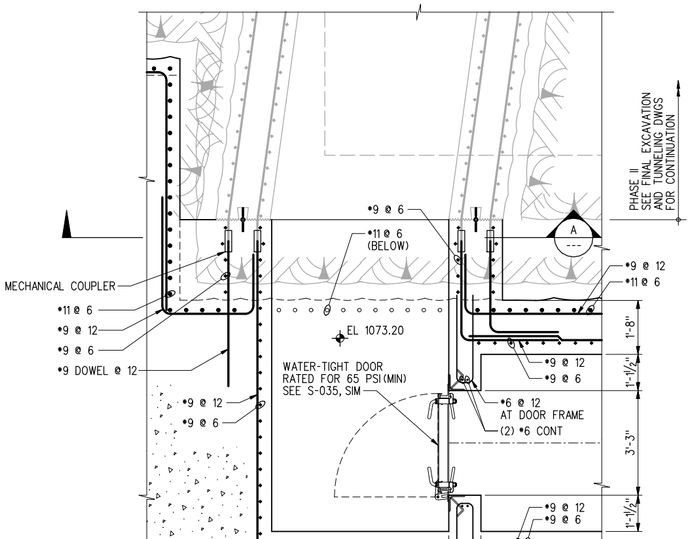

1 DETAIL

1/2"=1'-0" 0" 2" 4"

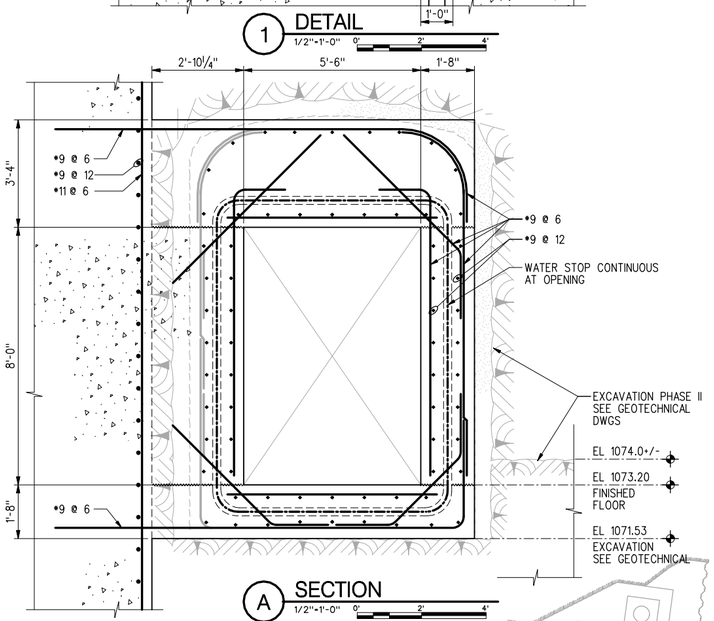

A SECTION

1/2"=1'-0" 0" 2" 4"

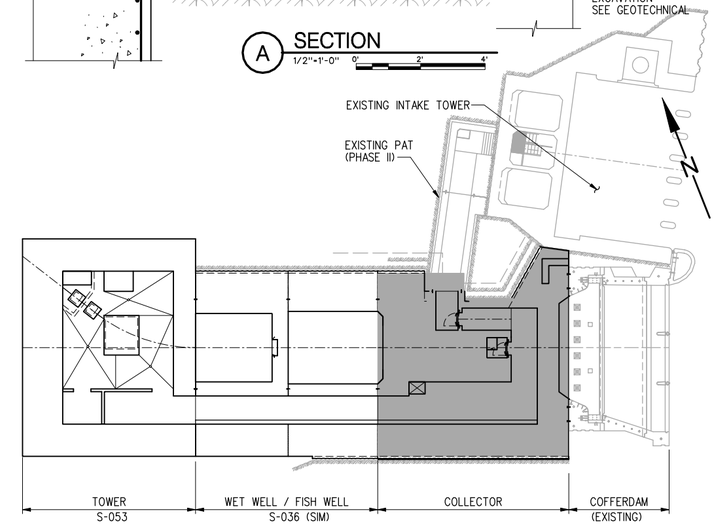

KEY PLAN

US Army Corps of Engineers
Seattle District

Description	Symbol	Appr.	Date
			/ /

Date: 16 MAR 06
File •
Rev. E-56-14-19
Designed by: X
Drawn by:
Checked by: X
Prepared by:

U.S.ARMY ENGINEER DISTRICT,SEATTLE
CORPS OF ENGINEERS
SEATTLE, WASHINGTON

ADDITIONAL WATER STORAGE PROJECT
HOWARD HANSON DAM
COLLECTOR PLAN AT EL 1074.13
GREEN RIVER WASHINGTON

Plate number: S-011
Sheet of

I:\AEC\Designs\HHAWS\Structural\HHAWS_ts-011.DGN
DESIGN FILE:
11:44:00 AM
DATE AND TIME PLOTTED: 8/6/2008

NOTES:

1. CONCRETE DIMENSIONS SHOWN ARE CONSISTENT WITH STRUCTURAL DESIGN REQUIREMENTS. ACTUAL GEOMETRY AND WALL THICKNESS MAY VARY WHEN CAST AGAINST UNFORMED EDGE OF EXCAVATION.
2. GEOTECHNICAL ROCK ANCHORS ARE NOT SHOWN. SEE PHASE II, EXCAVATION AND TUNNELING FOR SHOTCRETE AND ROCK SUPPORT DETAIL REQUIREMENTS.
3. FOR REINFORCING, SEE PLATE NO. S-0xx
4. FOR GENERAL STRUCTURAL NOTES, SEE S-001.

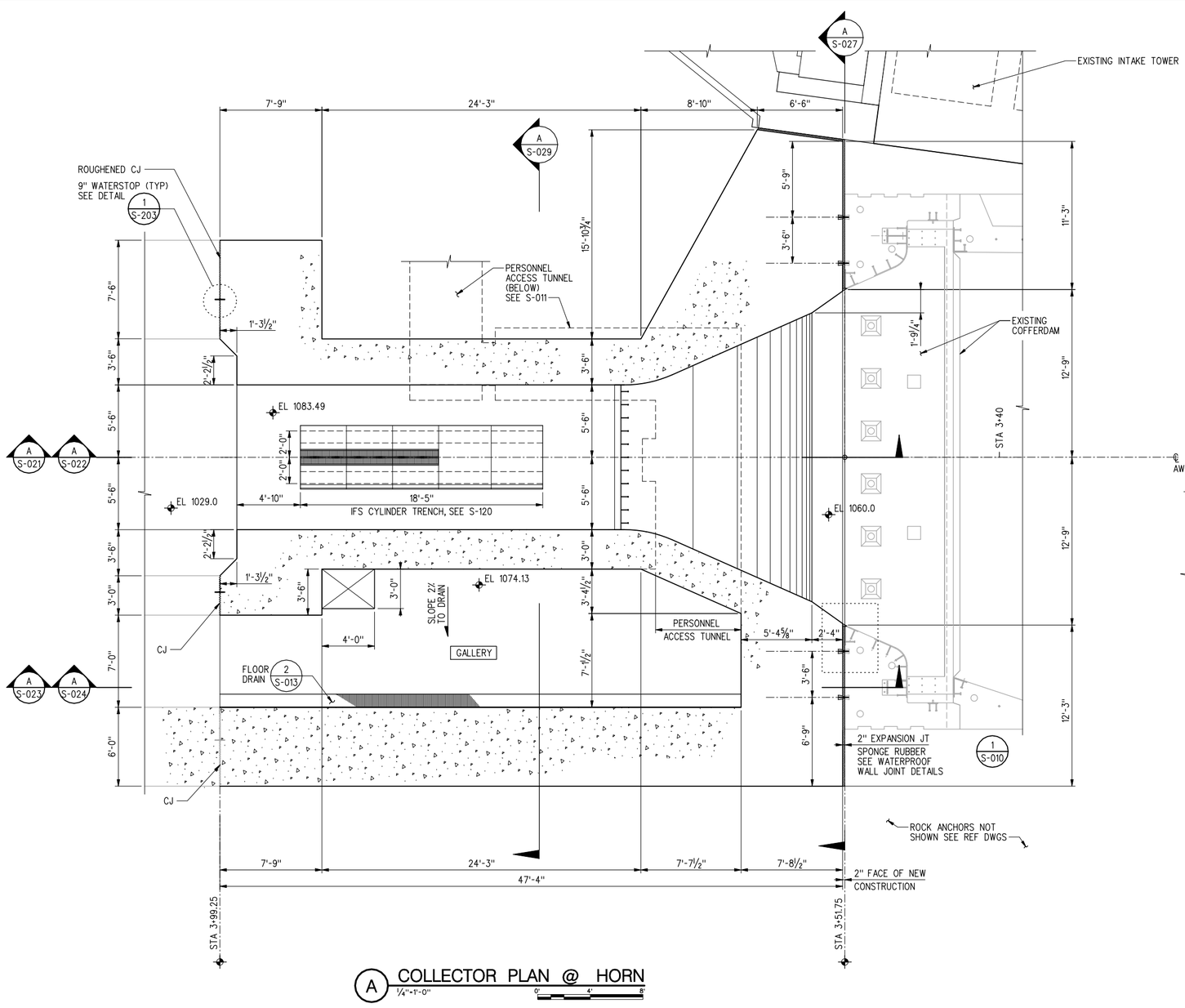

A COLLECTOR PLAN @ HORN
1/4"=1'-0"

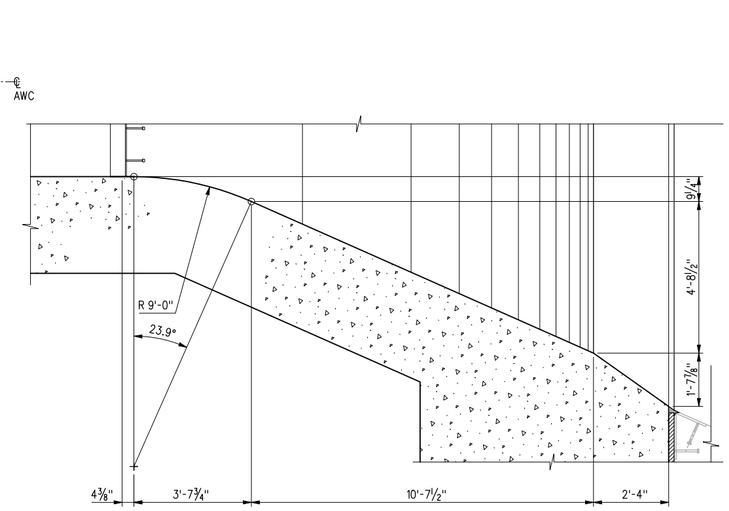

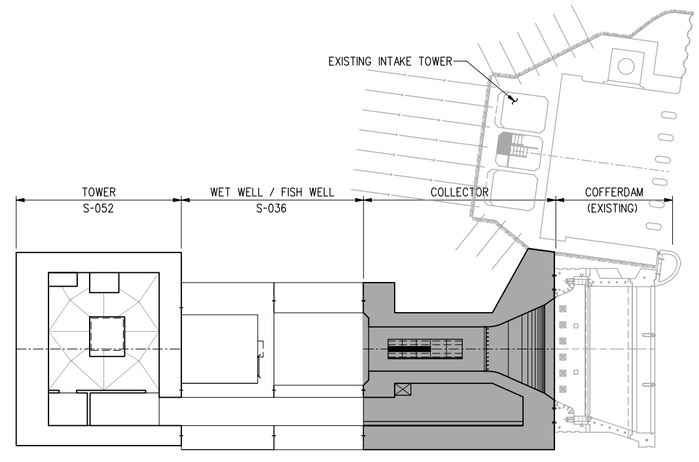

KEY PLAN

US Army Corps of Engineers
Seattle District

Symbol	Description
Appr.	Symbol
Date	/ /
	Description
Symbol	

Date: 16 MAR 06
File #: E-56-14-19
Rev.
Designed by:
Drawn by:
Checked by:

U.S.ARMY ENGINEER DISTRICT,SEATTLE
CORPS OF ENGINEERS
SEATTLE, WASHINGTON
Prepared by:

ADDITIONAL WATER STORAGE PROJECT
HOWARD HANSON DAM
GREEN RIVER WASHINGTON

COLLECTOR PLAN AT HORN

Plate number: S-012
Sheet of

P:\AECDesigns\HHAWS\Structural\HHAWS_ts-012.DGN
DESIGN FILE:
11:44:18 AM
DATE AND TIME PLOTTED: 8/6/2008

NOTES:

1. FOR PLAN REINFORCING, SEE PLATE NO. S-019
2. SEE ARCHITECTURAL DRAWINGS FOR STAIR DETAILS.

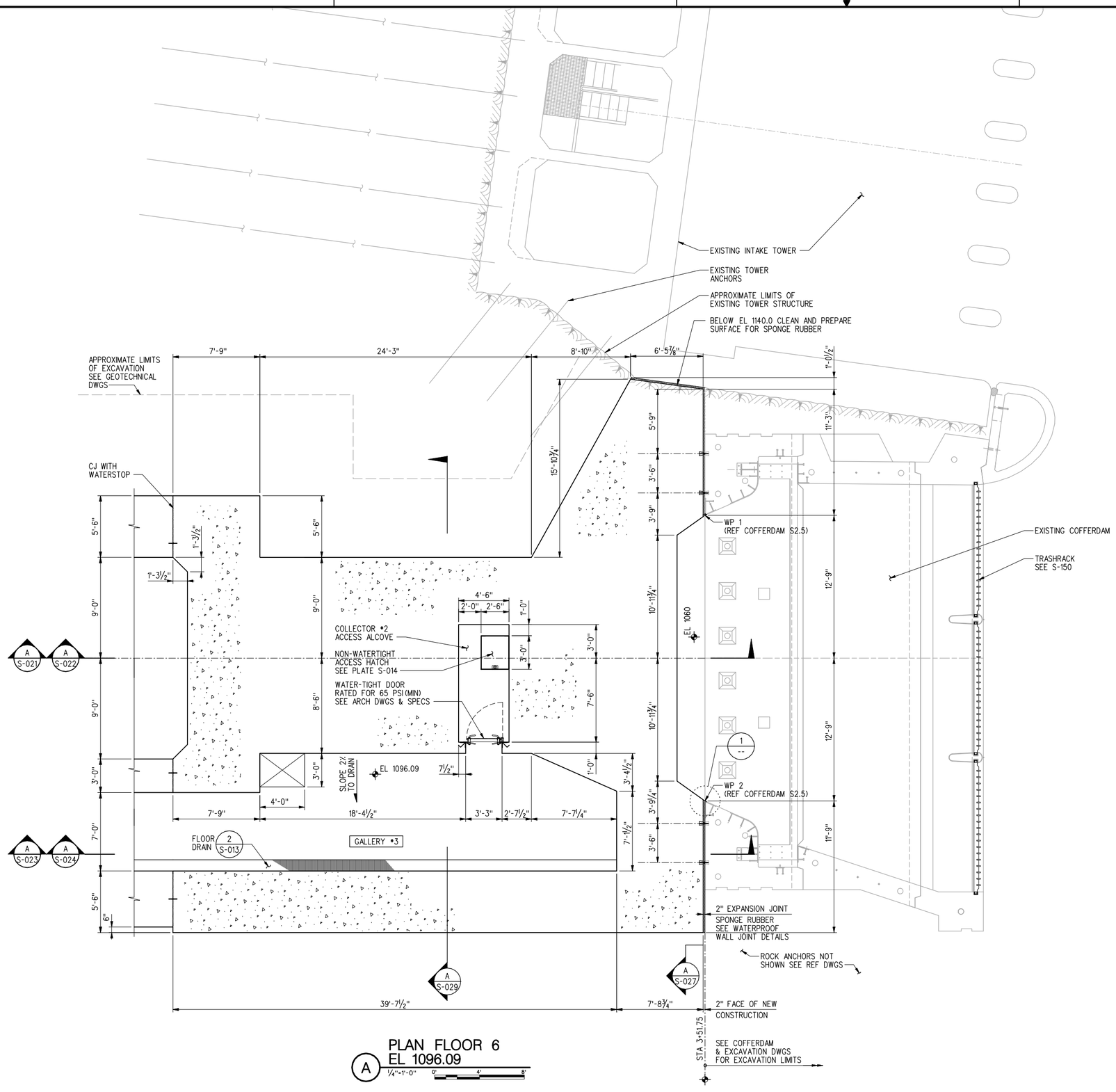

A PLAN FLOOR 6
EL 1096.09
¼"=1'-0"

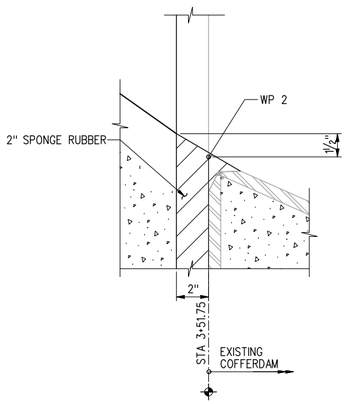

1 DETAIL
3"=1'-0"
(NOTE: SIMILAR AT WP1)

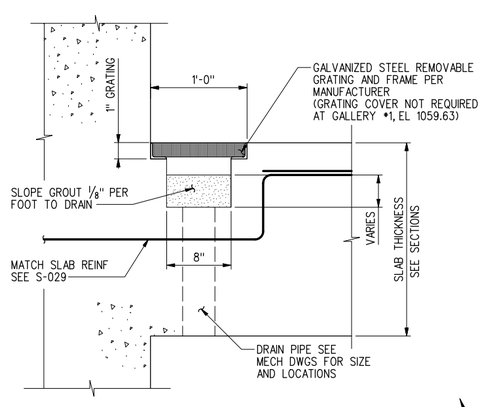

2 FLOOR DRAIN DETAIL
11/2"=1'-0"

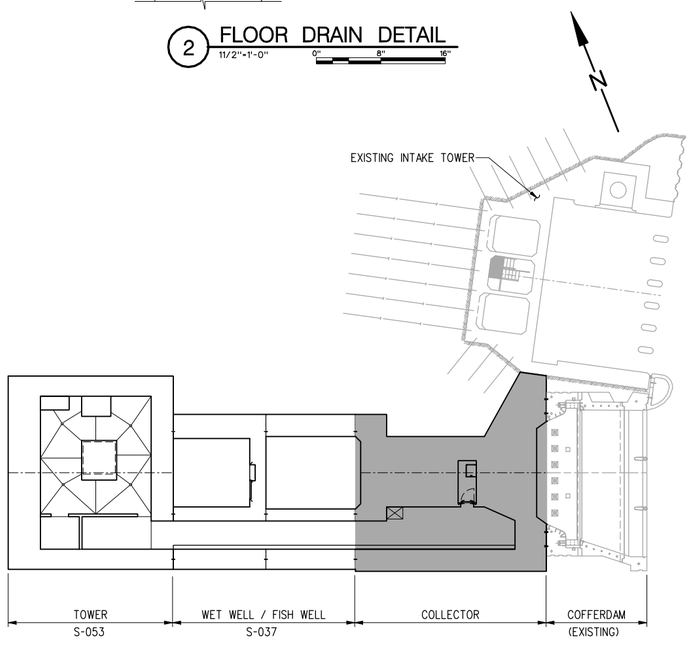

KEY PLAN

US Army Corps of Engineers
Seattle District

Symbol	Description	Date	Appr.	Symbol	Description

U.S. ARMY ENGINEER DISTRICT, SEATTLE
CORPS OF ENGINEERS
SEATTLE, WASHINGTON

Designed by: X
Drawn by: X
Checked by: X
Date: 16 MAR 06
File #: E-56-14-19
Rev.

Prepared by:

ADDITIONAL WATER STORAGE PROJECT
HOWARD HANSON DAM
COLLECTOR PLAN AT
EL 1096.09
GREEN RIVER WASHINGTON

Plate number:
S-013
Sheet of

DATE AND TIME PLOTTED: 8/6/2008 11:44:35 AM DESIGN FILE: I:\AECDesigns\HHAW\Structural\HHAWS-1s-013.DGN

NOTES:

1. FOR REINFORCING, SEE PLATE NO. S-019
2. SEE ARCHITECTURAL DRAWINGS FOR STAIR DETAILS.

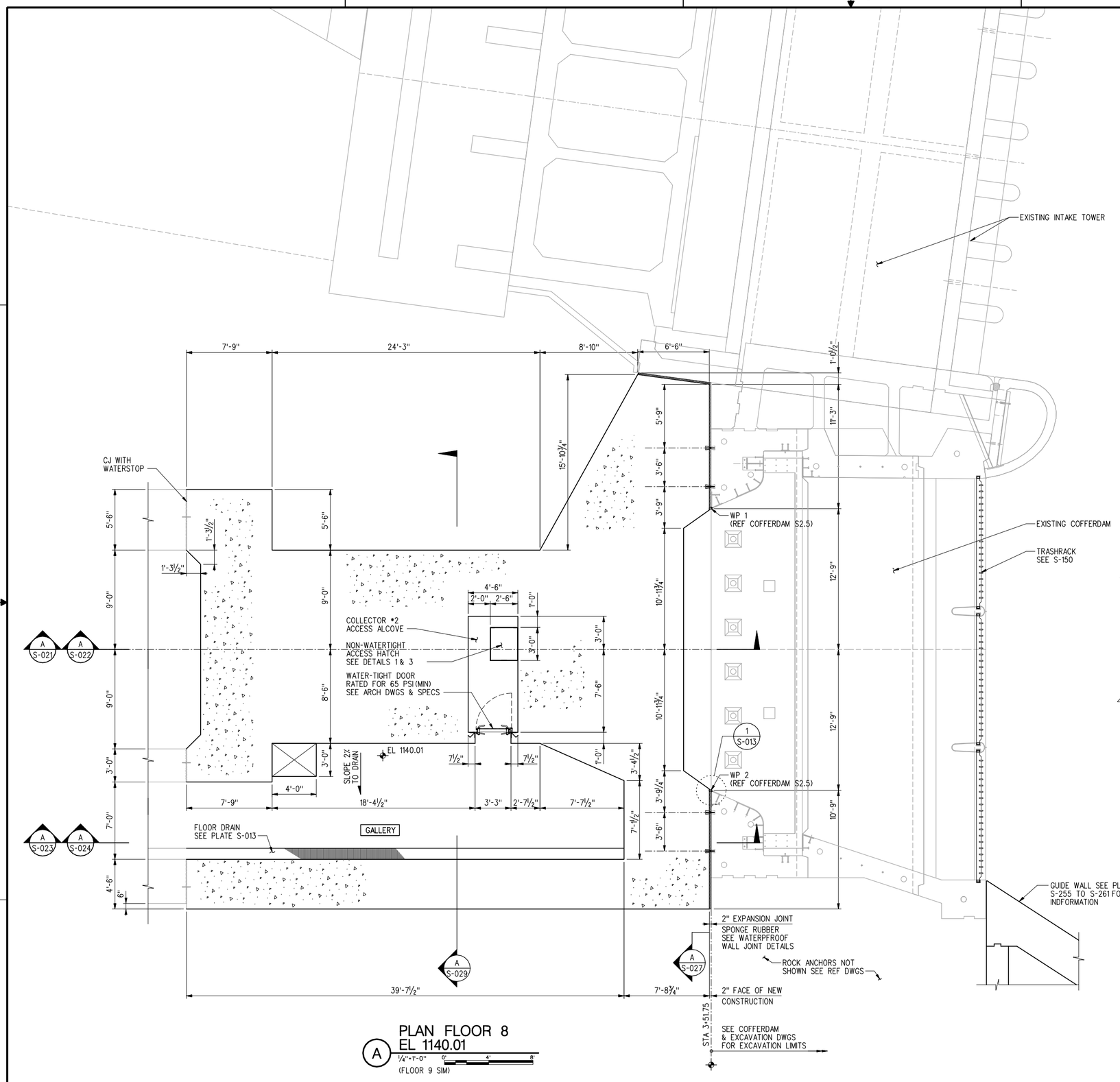

A PLAN FLOOR 8 EL 1140.01

¼"=1'-0" (FLOOR 9 SIM)

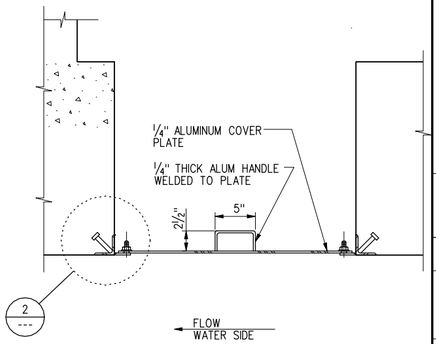

1 ACCESS HATCH SECTION

1½"=1'-0"

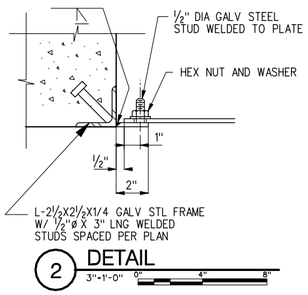

2 DETAIL

3"=1'-0"

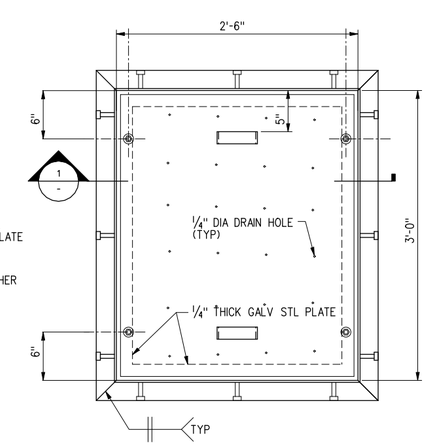

3 ACCESS HATCH PLAN

1½"=1'-0"

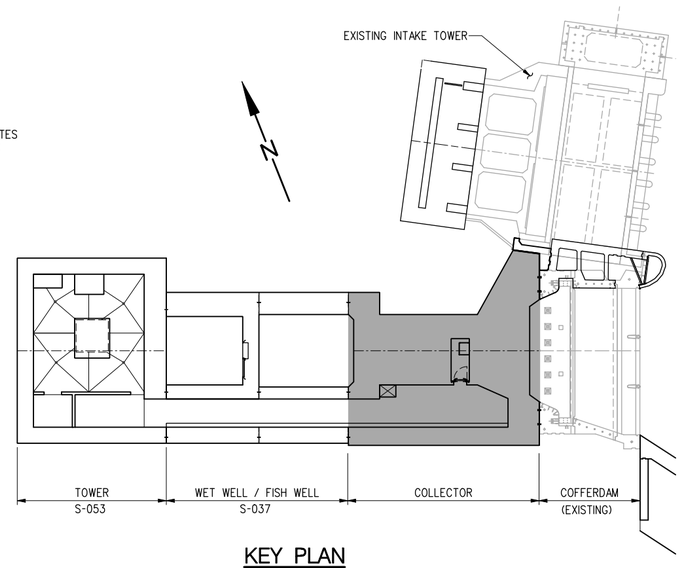

KEY PLAN

US Army Corps of Engineers
Seattle District

Description	Symbol	Appr.	Date
			/ /

Date: 16 MAR 06
File #: E-56-14-19
Designed by: X
Drawn by: X
Checked by: X
Rev.

U.S. ARMY ENGINEER DISTRICT, SEATTLE
CORPS OF ENGINEERS
SEATTLE, WASHINGTON
Prepared by:

ADDITIONAL WATER STORAGE PROJECT
HOWARD HANSON DAM
COLLECTOR PLAN AT EL 1140.01
GREEN RIVER WASHINGTON

Plate number:
S-014
Sheet of

DESIGN FILE: I:\ACEDesigns\HHAWS\Structural\HHAWS_ts-014.DGN
DATE AND TIME PLOTTED: 8/6/2008 11:44:54 AM

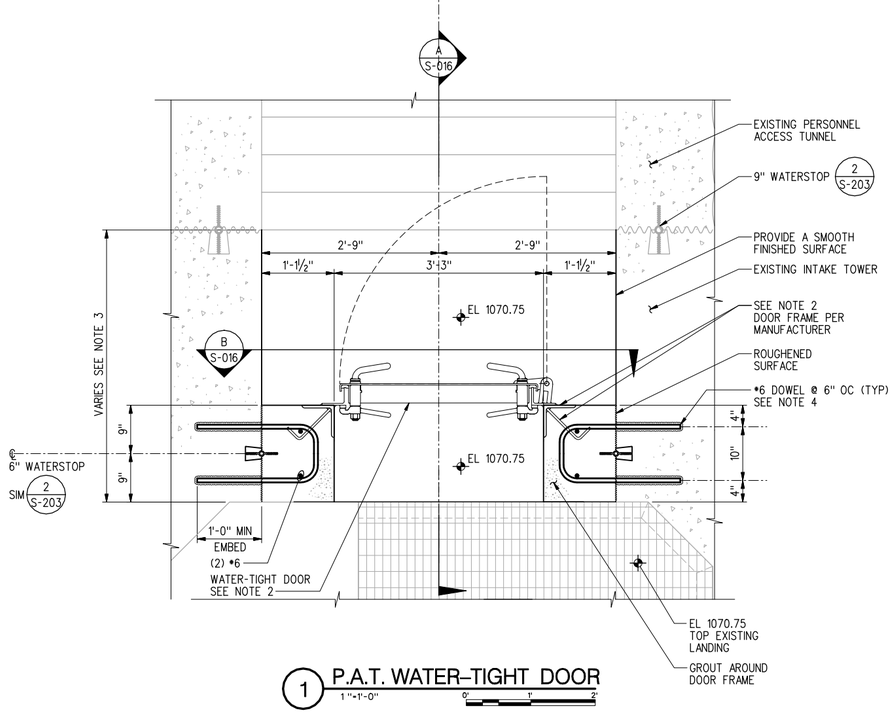

1 P.A.T. WATER–TIGHT DOOR
1 "=1'-0"

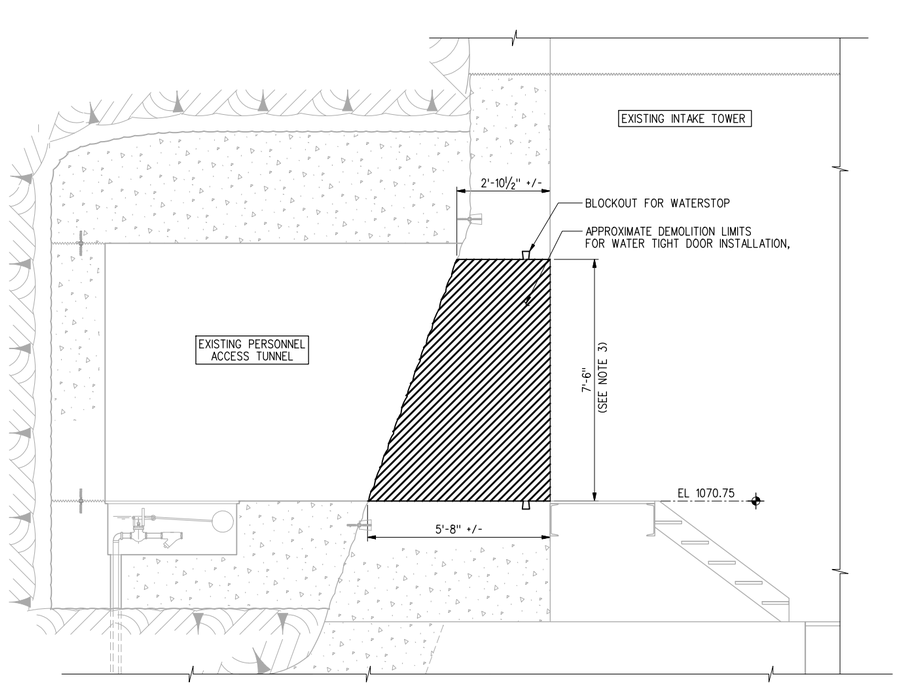

A DEMOLITION SECTION
1/2"=1'-0"
(SEE NOTE 1)

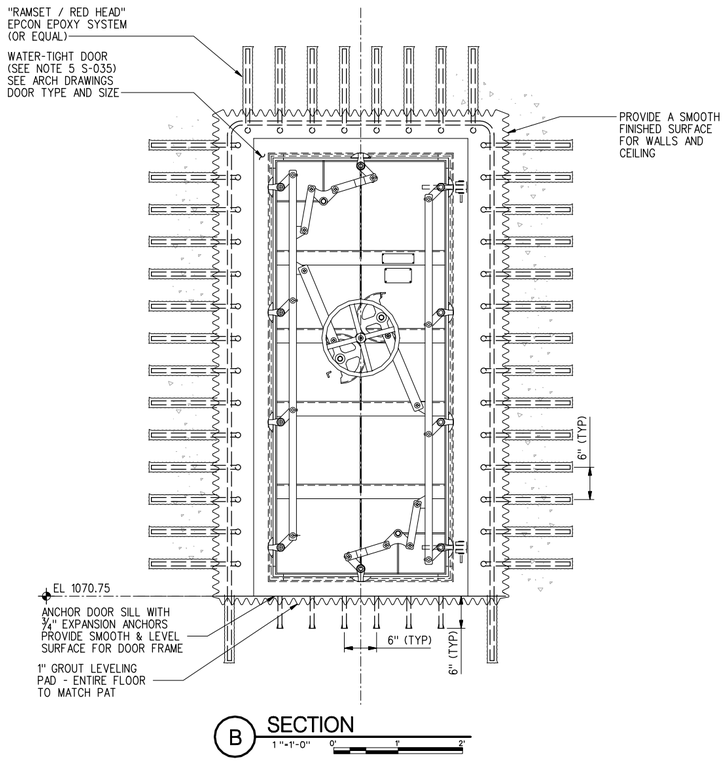

B SECTION
1 "=1'-0"

NOTES:

1. SEE REF DRAWINGS, HOWARD HANSON DAM, FISH PASSAGE FACILITY FINAL EXCAVATION AND TUNNELING, S-1 THRU S-6 FOR ADDITIONAL INFORMATION NOT SHOWN.
2. CONTRACTOR SHALL VERIFY DIMENSION REQUIREMENTS FOR THE OPENING WITH THE MANUFACTURER OF THE WATERTIGHT DOOR. DETAILS PROVIDED BASED ON WALZ & KRENZER INC.'s QUICK-ACTING WATERTIGHT DOOR.
3. SAW CUT EXISTING INTAKE TOWER WALL. PREPARE SURFACE FOR WATER TIGHT DOOR FRAME. EXISTING WALL THICKNESS VARIES.
4. DRILLED-IN REINFORCING DOWELL SHALL BE INSTALLED USING EXPOXY ADHESIVE MATERIAL (EXPOXY RESIN, ASM C881, TYPE IV, GRADE 3 CLASS B) OR APPROVED EQUAL. THE DRILLED HOLE SIZES SHALL BE 1/8" LARGER THAN DOWEL DIAMETER OR PER MANURACTURER'S RECOMMENDATIONS.

US Army Corps of Engineers
Seattle District

Symbol	Description	Date	Appr.
		/ /	

Date: 16 MAR 06
File •
E-56-14-19
Rev.

Designed by: X
Drawn by: X
Checked by: X

U.S.ARMY ENGINEER DISTRICT,SEATTLE
CORPS OF ENGINEERS
SEATTLE, WASHINGTON

Prepared by:

ADDITIONAL WATER STORAGE PROJECT
HOWARD HANSON DAM
GREEN RIVER WASHINGTON

COLLECTOR SECTIONS & DETAILS

Plate number:
S-016
Sheet of

I:\AEC\Designs\HHAW\Structural\HHAWS-1s-016.DGN
DESIGN FILE: 11:45:12 AM
DATE AND TIME PLOTTED: 8/6/2008

STA 3+99.26

STA 3+69.25

STA 3+51.75

BYPASS PIPE

4'- 1/8 "

2'-9 1/8 "

GUIDEWALLS

WET WELL

MITER GATES

*6 @ 12"

*9 @ 12" (VARIES)

*9 @ 6" (VARIES)

EXISTING WALL REINF. DESIGN

GALLERY

C_L COLLECTOR

HORN PLAN DETAIL

TYPICAL COLLECTOR REINFORING I

1/2"=1'-0"

0" 2' 4'

US Army Corps of Engineers
Seattle District

Symbol	Date	Appr.	Description
	/ /		

U.S.ARMY ENGINEER DISTRICT,SEATTLE
CORPS OF ENGINEERS
SEATTLE, WASHINGTON
Prepared by:

Designed by:
Drawn by:
Checked by:
Date: 16 MAR 06
File # E-56-14-19
Rev.

ADDITIONAL WATER STORAGE PROJECT
HOWARD HANSON DAM
GREEN RIVER WASHINGTON

TYPICAL COLLECTOR REINFORCING I

Plate number: S-020
Sheet of

F:\AECDesigns\HHAW\Structural\HHAWS-1s-019.DGN
DESIGN FILE:
11:45:27 AM
DATE AND TIME PLOTTED: 8/6/2008

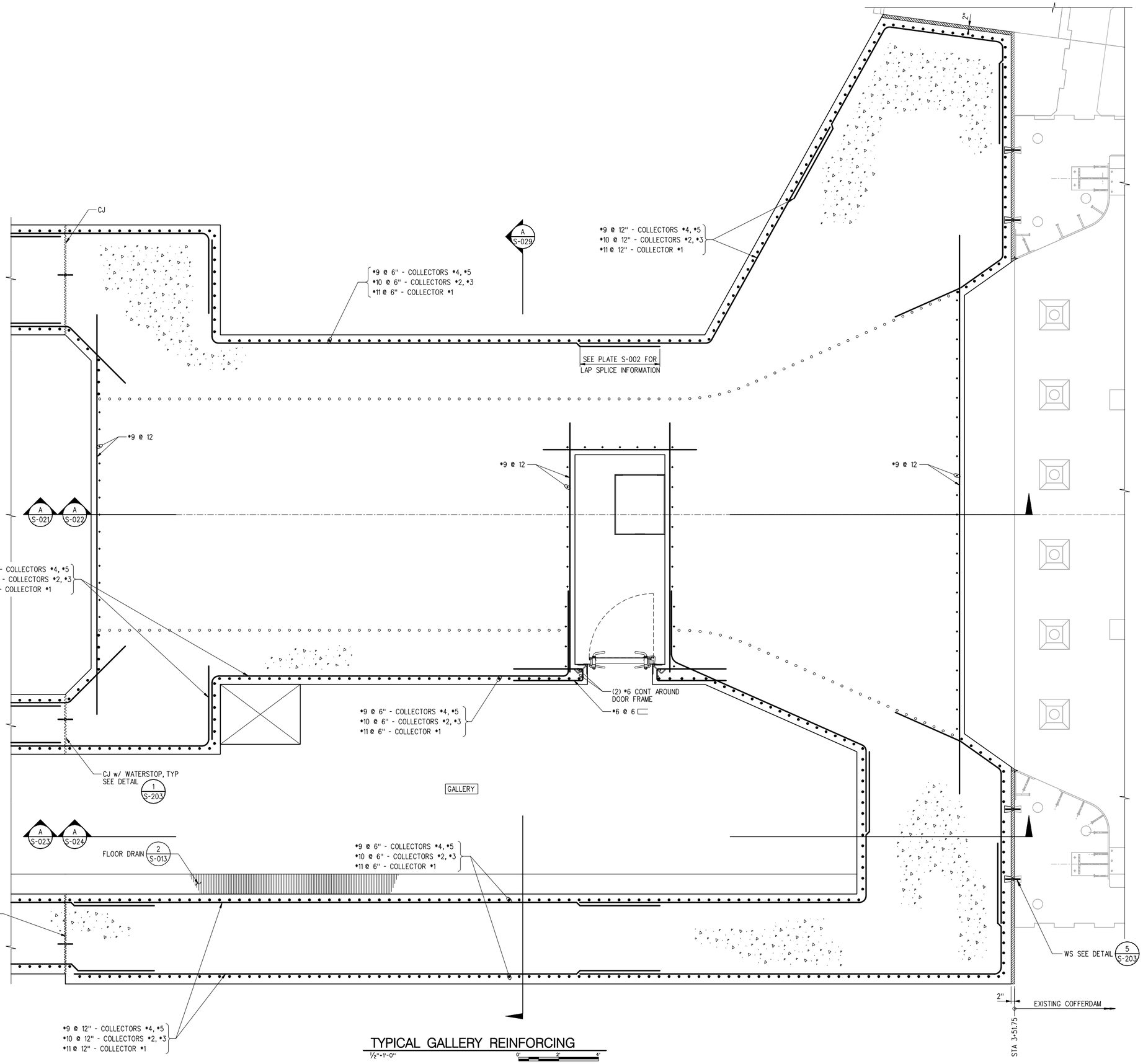

TYPICAL GALLERY REINFORCING

½"=1'-0"

0" 2" 4"

US Army Corps of Engineers
Seattle District

Symbol	Description	Appr.	Date
			/ /

Date: 16 MAR 06
File #: E-56-14-19
Rev:

Designed by:
Drawn by:
Checked by:
Prepared by:

U.S.ARMY ENGINEER DISTRICT,SEATTLE
CORPS OF ENGINEERS
SEATTLE, WASHINGTON

ADDITIONAL WATER STORAGE PROJECT
HOWARD HANSON DAM
GREEN RIVER WASHINGTON

TYPICAL GALLERY REINFORCING

Plate number:
S-019
Sheet of

DESIGN FILE: I:\AECDesigns\HHAW\Structural\HHAWS-1s-019.DGN
DATE AND TIME PLOTTED: 8/6/2008 11:45:28 AM

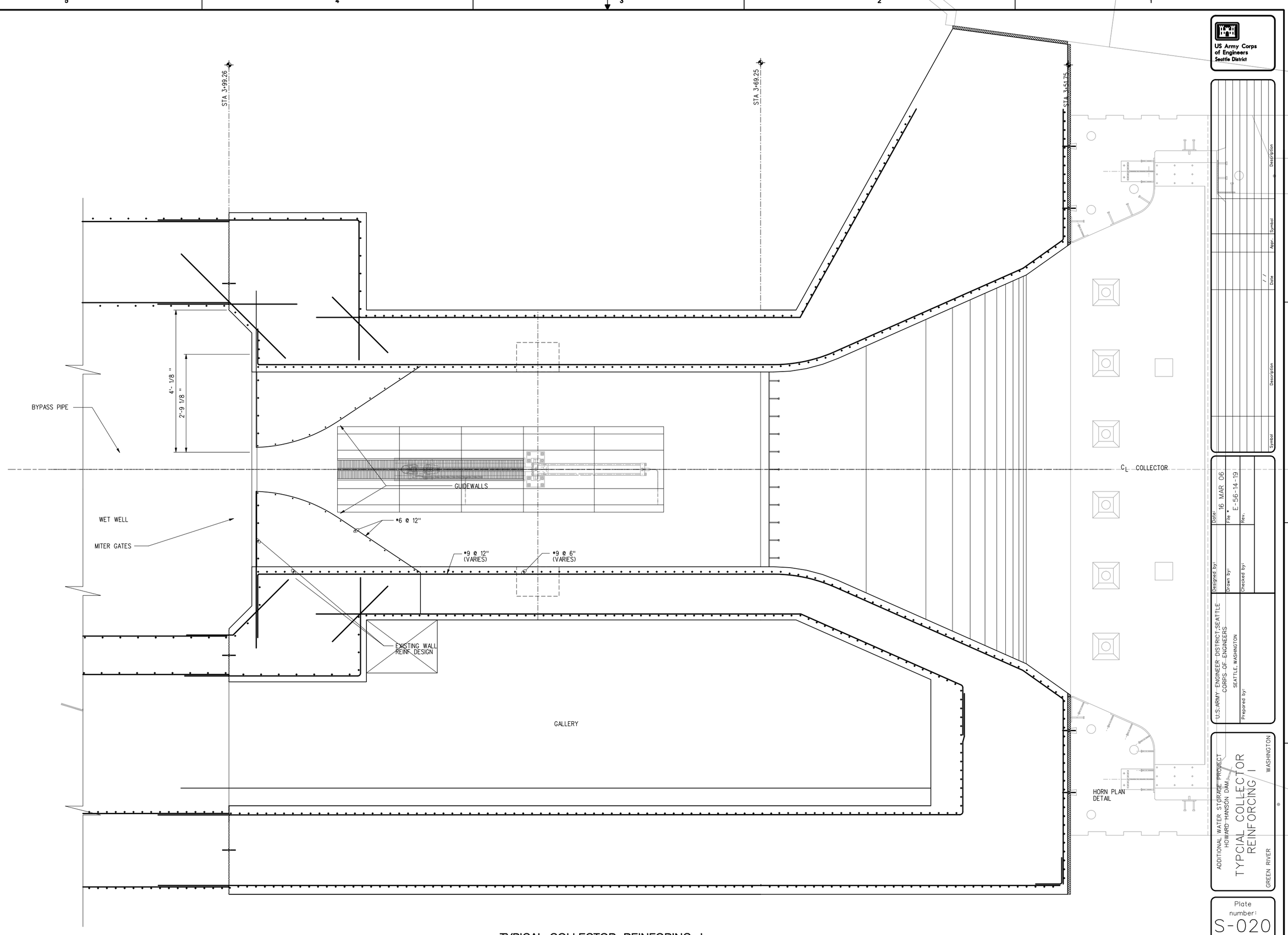

TYPICAL COLLECTOR REINFORING I

1/2"=1'-0"

US Army Corps of Engineers
Seattle District

Symbol	Description	Date	Appr.	Symbol	Description
		/ /			

U.S. ARMY ENGINEER DISTRICT, SEATTLE
CORPS OF ENGINEERS
SEATTLE, WASHINGTON

Prepared by:

Designed by:
Drawn by:
Checked by:

Date: 16 MAR 06
File # E-56-14-19
Rev.

ADDITIONAL WATER STORAGE PROJECT
HOWARD HANSON DAM
TYPCIAL COLLECTOR REINFORCING I
GREEN RIVER WASHINGTON

Plate number:
S-020
Sheet of

DATE AND TIME PLOTTED: 8/6/2008 11:45:45 AM DESIGN FILE: I:\AECDesigns\HHAW\Structural\HHAWS-1s-020.DGN

NOTES:

1. SEE S-012 FOR CURVE DATA.
2. SEE S-001 AND S-002 FOR REINFORCING NOTES.
3. CAMERA BLOCKOUTS NOT SHOWN, SEE S-125 FOR LOCATIONS.

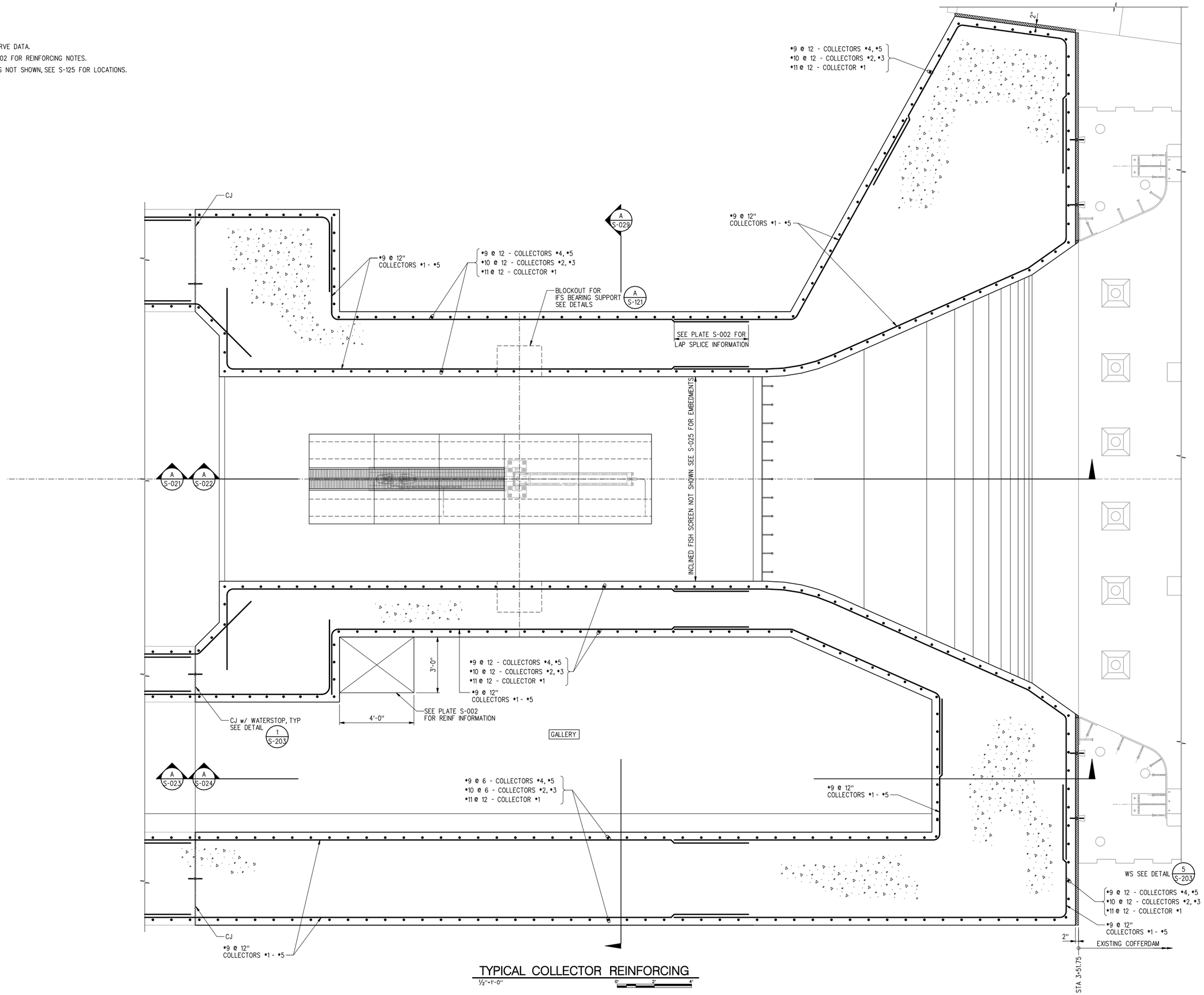

TYPICAL COLLECTOR REINFORCING

1/2"=1'-0"

US Army Corps of Engineers
Seattle District

Description	Symbol	Appr.	Date
			/ /

Date: 16 MAR 06
File •
E-56-14-19
Rev.

Designed by:
Drawn by:
Checked by:
Prepared by:

U.S.ARMY ENGINEER DISTRICT,SEATTLE
CORPS OF ENGINEERS
SEATTLE, WASHINGTON

ADDITIONAL WATER STORAGE PROJECT
HOWARD HANSON DAM
GREEN RIVER WASHINGTON

TYPCIAL COLLECTOR WALL REINFORCING II

Plate number:
S-020
Sheet of

DESIGN FILE: I:\AEC\Designs\HHAW\Structural\HHAWS-1s-020.DGN
DATE AND TIME PLOTTED: 8/6/2008 11:45:46 AM

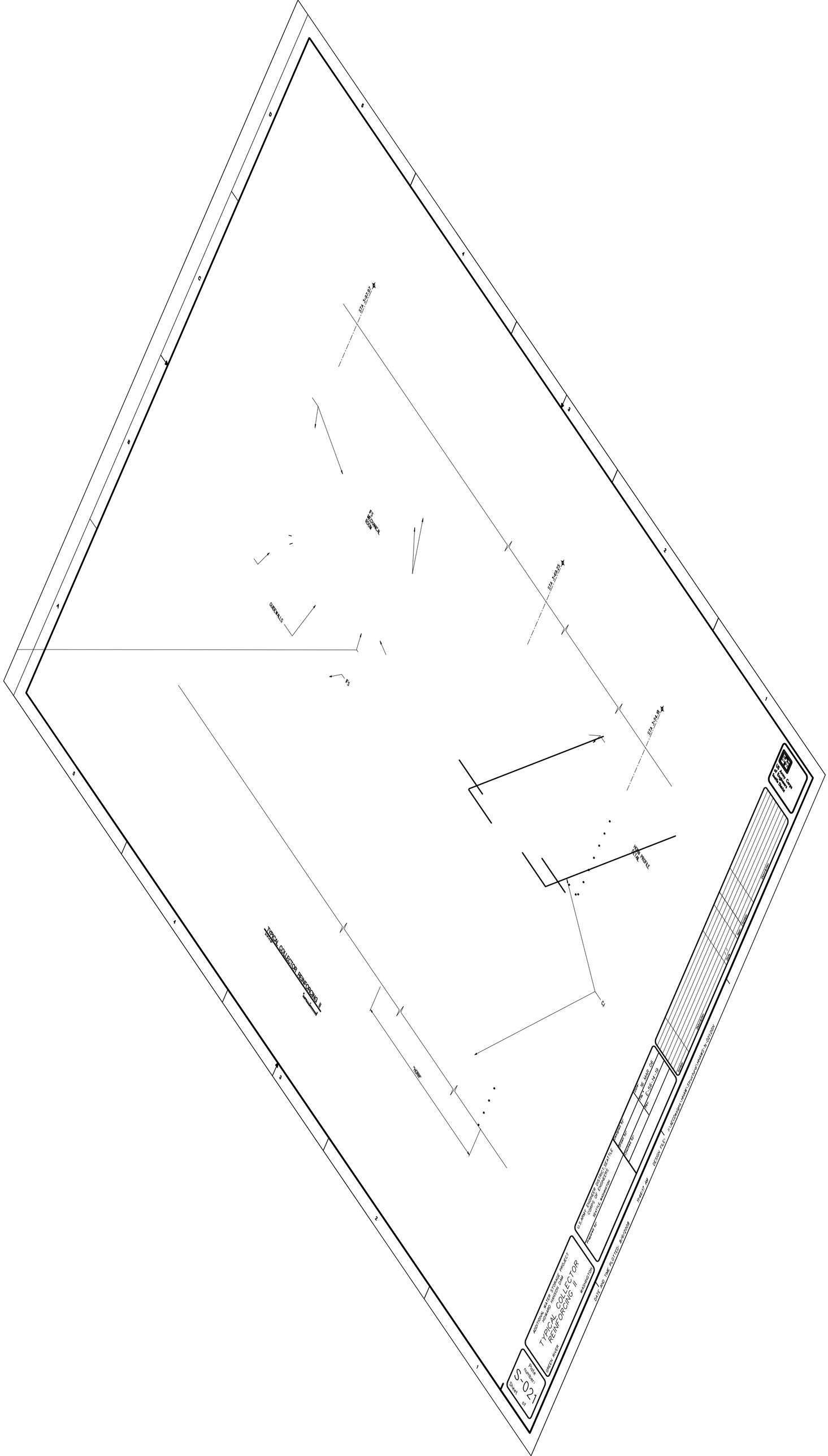

TYPICAL COLLECTOR REINFORCING II
GUIDEWALLS
STA 3+67.97
STA 3+69.25
STA 3+54.18
U.S. ARMY ENGINEER DISTRICT, SEATTLE
CORPS OF ENGINEERS
SEATTLE, WASHINGTON
Prepared by:
Checked by:
Designed by:
Checked by:
Date: 16 MAR 06
Rev: E-56-14-19
DATE AND TIME PLOTTED: 8/6/2008
DESIGN FILE: I:\AECOmsignal\HAMM\Structural\HAMM5-15-021.DGN
ADDITIONAL WATER STORAGE PROJECT
HOWARD HANSON DAM
TYPICAL COLLECTOR REINFORCING II
GREEN RIVER
WASHINGTON
Plate number:
S-021
Sheet of

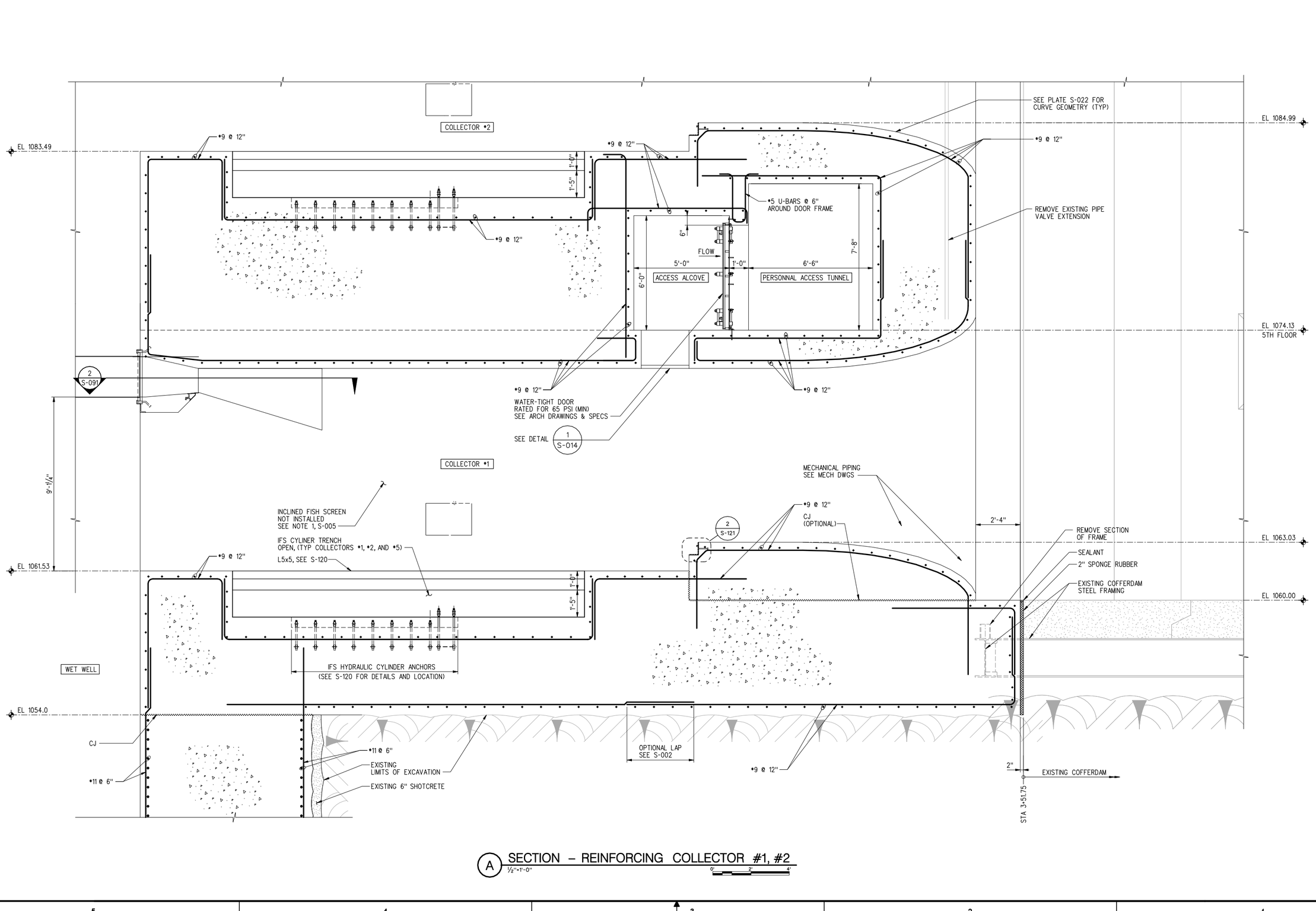

A SECTION – REINFORCING COLLECTOR #1, #2
½"=1'-0"
0' 2' 4'

US Army Corps of Engineers
Seattle District

Symbol	Description	Appr.	Date
			/ /

Date: 16 MAR 06
File #: E-56-14-19
Rev.

Designed by:
Drawn by:
Checked by:

U.S. ARMY ENGINEER DISTRICT, SEATTLE
CORPS OF ENGINEERS
SEATTLE, WASHINGTON
Prepared by:

ADDITIONAL WATER STORAGE PROJECT
HOWARD HANSON DAM
COLLECTOR #1 AND #2 REINFORCING
GREEN RIVER WASHINGTON

Plate number:
S-021
Sheet of

I:\AECDesigns\HHAW\Structural\HHAWS-1s-021.DGN
DESIGN FILE:
11:46:18 AM
DATE AND TIME PLOTTED: 8/6/2008

ADDITIONAL WATER STORAGE PROJECT
HOWARD HANSON DAM

TYPICAL COLLECTOR REINFORCING II

GREEN RIVER WASHINGTON

U.S. ARMY ENGINEER DISTRICT SEATTLE
CORPS OF ENGINEERS
SEATTLE WASHINGTON

Prepared for:

Designed by:

Drawn by:

Checked by:

Date: 16 MAR 06

Rev: E-SS-14-19

Submitted by:

Approved by:

Date

Description

Rev. Number

Sheet Number
S-021

Drawing Number

DATE AND TIME PLOTTED: 6-MAY-2006
11:48:47 AM
DESIGN FILE: N:\ECDesigns\14HAR\Structural\14HARS-S-021.DGN

TYPICAL COLLECTOR REINFORCING II

STA 3+97.97

STA 3+68.25

STA 3+44.58

EXISTING ROCK

EXISTING ROCK

5.8

1'-0"

2'-0"

1'-0"

2'-0"

1'-0"

2'-0"

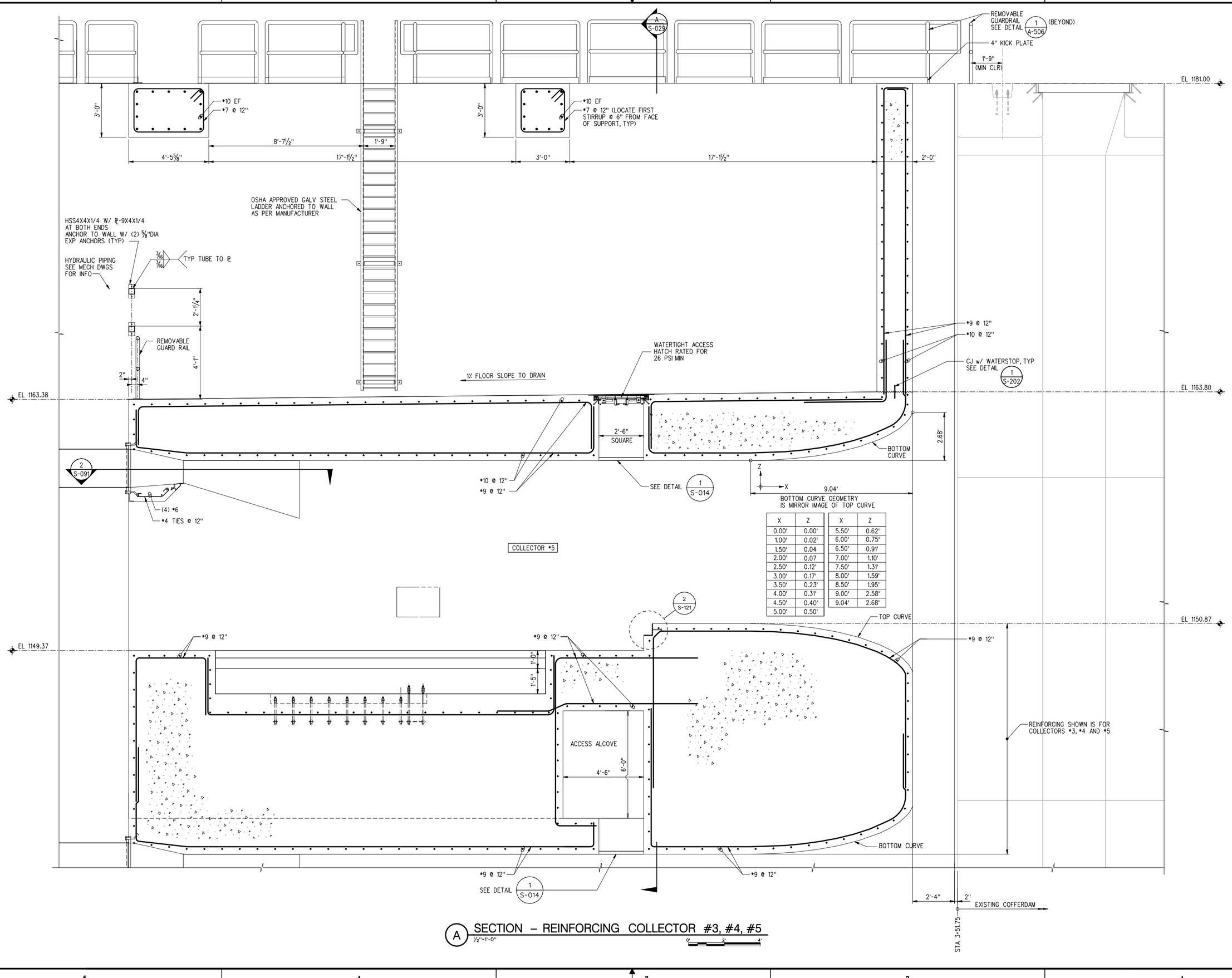

X	Z	X	Z
0.00'	0.00'	5.50'	0.62'
1.00'	0.02'	6.00'	0.75'
1.50'	0.04	6.50'	0.91'
2.00'	0.07	7.00'	1.10'
2.50'	0.12'	7.50'	1.31'
3.00'	0.17'	8.00'	1.59'
3.50'	0.23'	8.50'	1.95'
4.00'	0.31'	9.00'	2.58'
4.50'	0.40'	9.04'	2.68'
5.00'	0.50'		

A SECTION – REINFORCING COLLECTOR #3, #4, #5
½"=1'-0"
0' 2' 4'

US Army Corps of Engineers
Seattle District

Description | Appr. Symbol | Date | Description | Symbol

Date: 16 MAR 06
File #
E-56-14-19
Rev.

Designed by:
Drawn by:
Checked by:
Prepared by:

U.S.ARMY ENGINEER DISTRICT,SEATTLE
CORPS OF ENGINEERS
SEATTLE, WASHINGTON

ADDITIONAL WATER STORAGE PROJECT
HOWARD HANSON DAM
GREEN RIVER WASHINGTON

COLLECTOR #3, #4, & #5 REINFORCING

Plate number:
S-022
Sheet of

FILE: I:\AEC\Designs\HHAW\Structural\HHAWS_ts-022.DGN
DESIGN FILE:
11:46:48 AM
DATE AND TIME PLOTTED: 8/6/2008

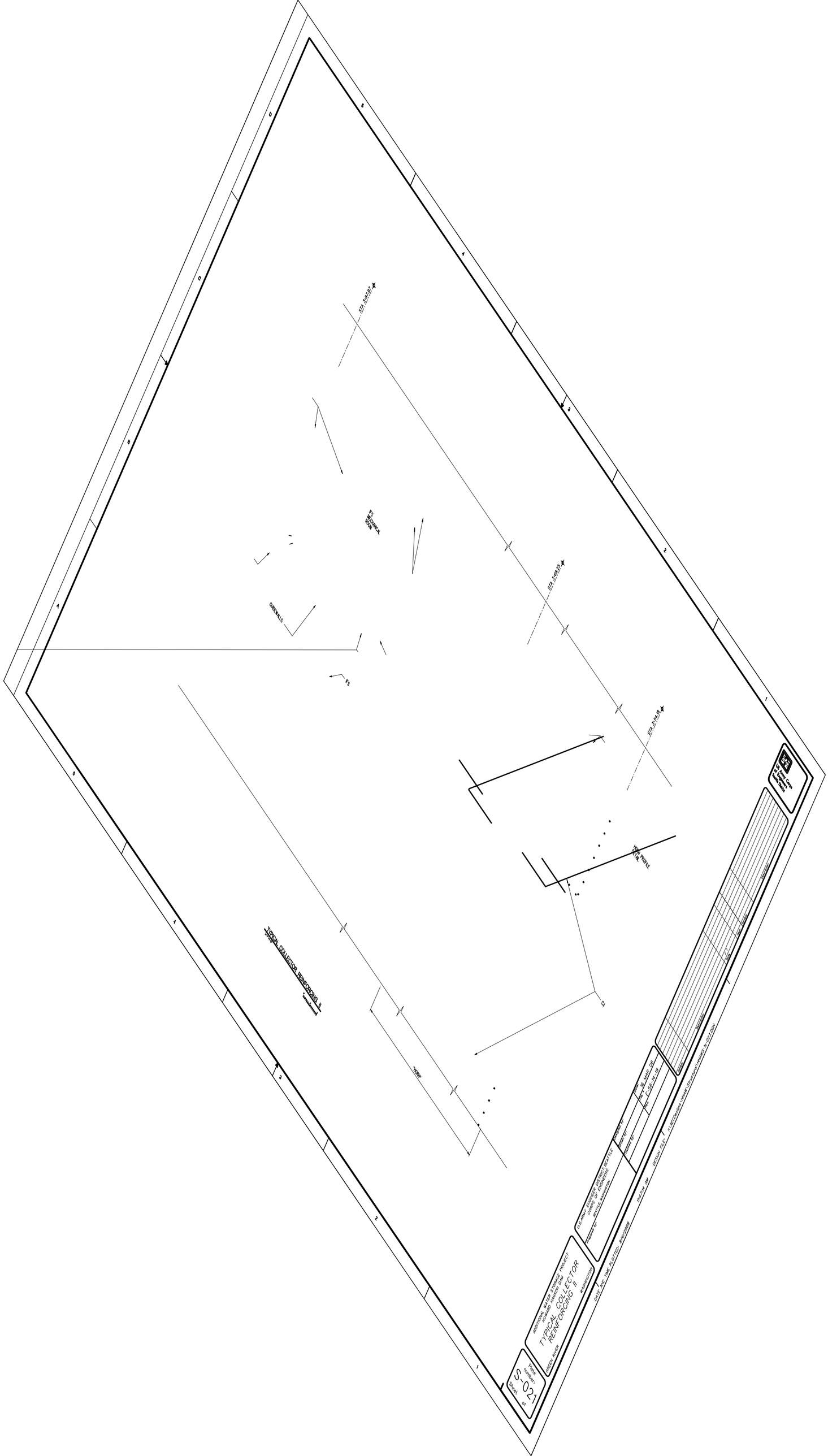

TYPICAL COLLECTOR REINFORCING II
GUIDEWALLS
STA 3+67.97
STA 3+69.25
STA 3+54.18
U.S. ARMY ENGINEER DISTRICT, SEATTLE
CORPS OF ENGINEERS
SEATTLE, WASHINGTON
ADDITIONAL WATER STORAGE PROJECT
HOWARD HANSON DAM
TYPICAL COLLECTOR REINFORCING II
GREEN RIVER
WASHINGTON
DATE AND TIME PLOTTED: 8/6/2008
DESIGN FILE: I:\AECOmsignal\HHAM\Structural\HHAMS-15-023.DGN
S-021

GALLERY *6

GALLERY *5

GALLERY *4

2'-0"

2'-0"

2'-0"

*9 @ 12"

*9 @ 12"

*10 @ 12"

*10 @ 6"

PERSONNAL ACCESS TUNNEL

6'-6"

7'-8"

SEE PLATE S-002 FOR PIPE PENETRATIONS

MECH PIPING SEE MECH PLATES

11'-8"

*11 @ 6"

*11 @ 12"

*11 @ 12"

*11 @ 6"

*11 @ 6"

*11 @ 12"

*11 @ 12"

CJ

CJ

CJ

REMOVE EXISTING VALVE EXTENSION

2" SPONGE RUBBER SEE WATERPROOF JOINT WALL JOINT DETAILS

REMOVE SECTION OF EXISTING FRAME

EXISTING LIMITS OF EXCAVATION

EXISTING 6" SHOTCRETE

EL 1096.09
FLOOR 6

EL 1074.13
FLOOR 5

EL 1061.53
FLOOR 4

EL 1060.00

EL 1054.00
BOTTOM EXCAVATION
SEE GEO DWGS

2"

EXISTING COFFERDAM

STA 3+51.75

A SECTION – REINFORCING @ GALLERY
½"=1'-0"
0' 2' 4'

US Army Corps of Engineers
Seattle District

Symbol	Description	Appr.	Symbol	Description
		/ / Date		

Designed by:
Drawn by:
Checked by:
Prepared by:

Date: 16 MAR 06
File #: E-56-14-19
Rev.

U.S.ARMY ENGINEER DISTRICT,SEATTLE
CORPS OF ENGINEERS
SEATTLE, WASHINGTON

ADDITIONAL WATER STORAGE PROJECT
HOWARD HANSON DAM
GALLERY REINFORCING I
GREEN RIVER WASHINGTON

Plate number:
S-023
Sheet of

DESIGN FILE: F:\AECDesigns\HHAW\Structural\HHAWS-1s-023.DGN
DATE AND TIME PLOTTED: 8/6/2008 11:47:15 AM

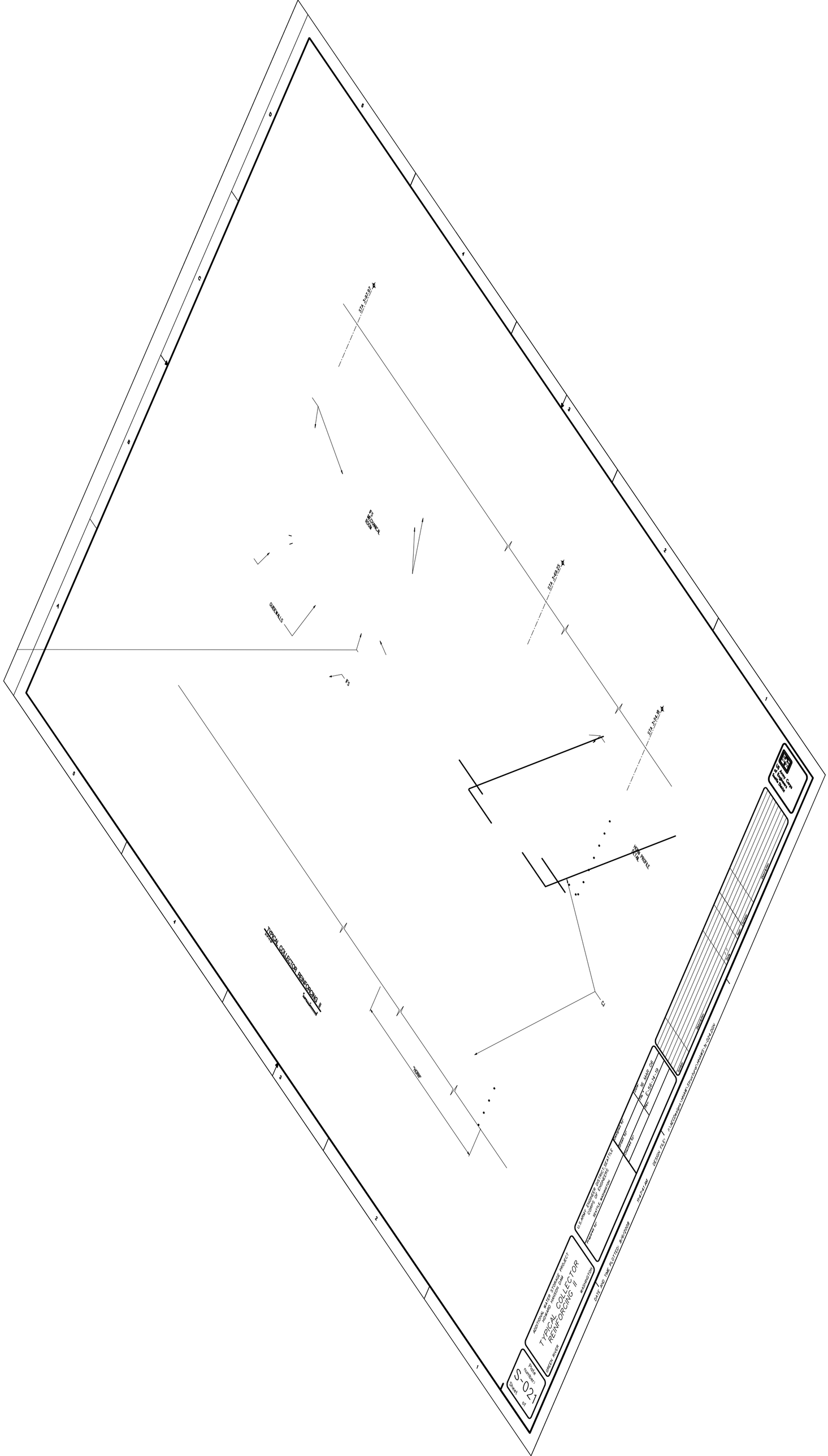

TYPICAL COLLECTOR REINFORCING II
GUIDEWALLS
STA 3+67.97
STA 3+69.25
STA 3+54.18
U.S. ARMY ENGINEER DISTRICT, SEATTLE
CORPS OF ENGINEERS
SEATTLE, WASHINGTON
Prepared by:
Checked by:
Date: 16 MAR 06
Rev: E-56-14-19
DESIGN FILE: I:\AECOM\Signal\HAMM\Structural\HAMM5-15-024.DGN
DATE AND TIME PLOTTED: 8/6/2008
ADDITIONAL WATER STORAGE PROJECT
HOWARD HANSON DAM
TYPICAL COLLECTOR REINFORCING II
GREEN RIVER
WASHINGTON
Plate number:
S-021
Sheet of

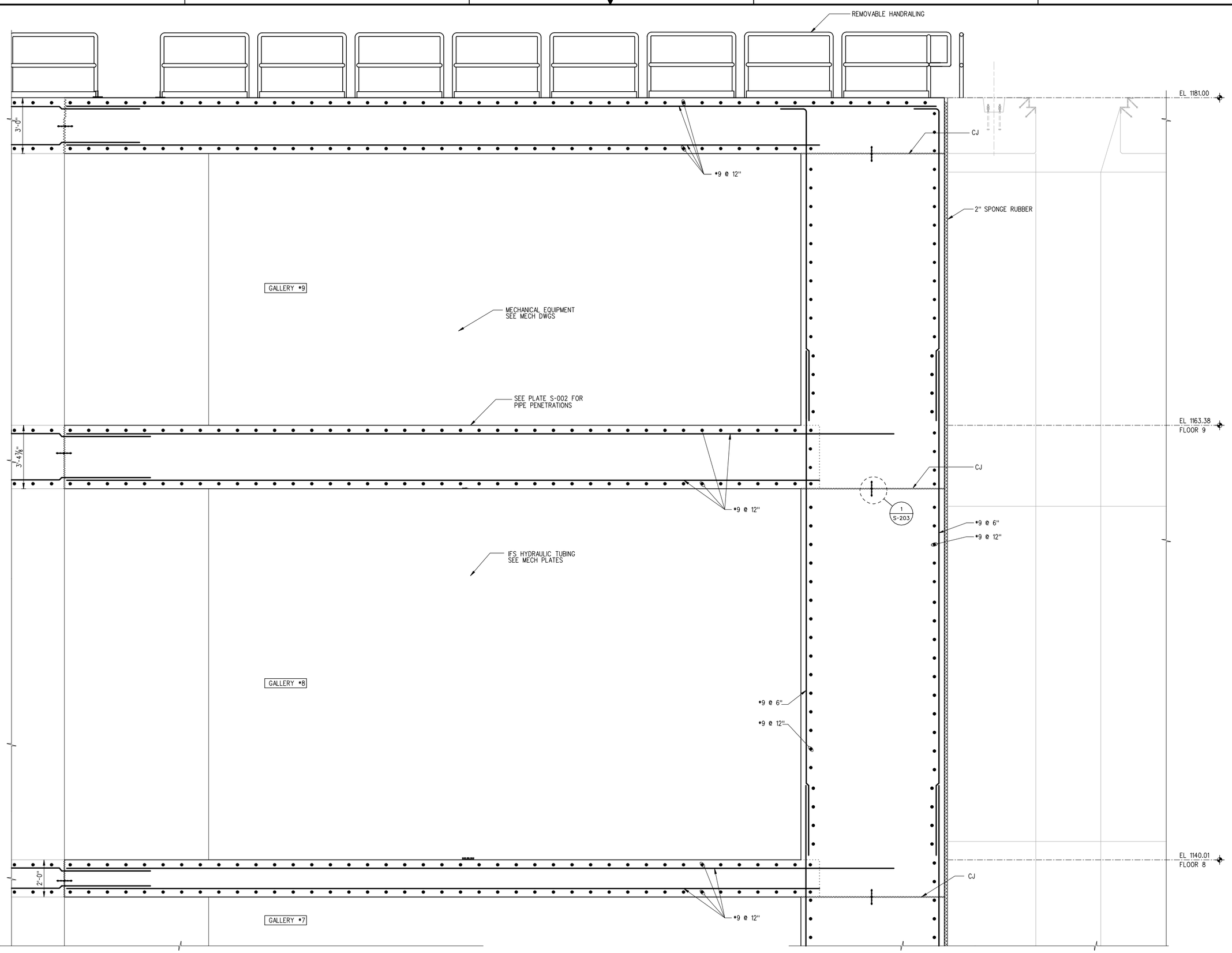

A SECTION – REINFORCING @ GALLERY
½"=1'-0"

NOTE: REINFORCING FOR FLOOR 7 IS SAME

US Army Corps of Engineers
Seattle District

Symbol	Description
Appr.	
Date	
Symbol	Description

Designed by:
Drawn by:
Checked by:
Prepared by:

Date: 16 MAR 06
File •
E-56-14-19
Rev.

U.S.ARMY ENGINEER DISTRICT,SEATTLE
CORPS OF ENGINEERS
SEATTLE, WASHINGTON

ADDITIONAL WATER STORAGE PROJECT
HOWARD HANSON DAM

GALLERY REINFORCING II

GREEN RIVER WASHINGTON

Plate number:
S-024
Sheet of

DESIGN FILE: P:\AECDesigns\HHAW\Structural\HHAWS_ts-024.DGN
DATE AND TIME PLOTTED: 8/6/2008 11:47:42 AM

NOTES:

1. CONCRETE DIMENSIONS, STEEL EMBEDMENTS, AND BLOCKOUTS SHOWN ARE CONSISTENT AT ALL COLLECTORS (1 THRU 5).
2. REINFORCING SHOWN IS TYPICAL AT ALL IFS GUIDE WALLS.
3. LIGHTING AND CAMERA BLOCKOUTS ABOVE IFS NOT SHOWN, SEE S-124 FOR LOCATIONS.

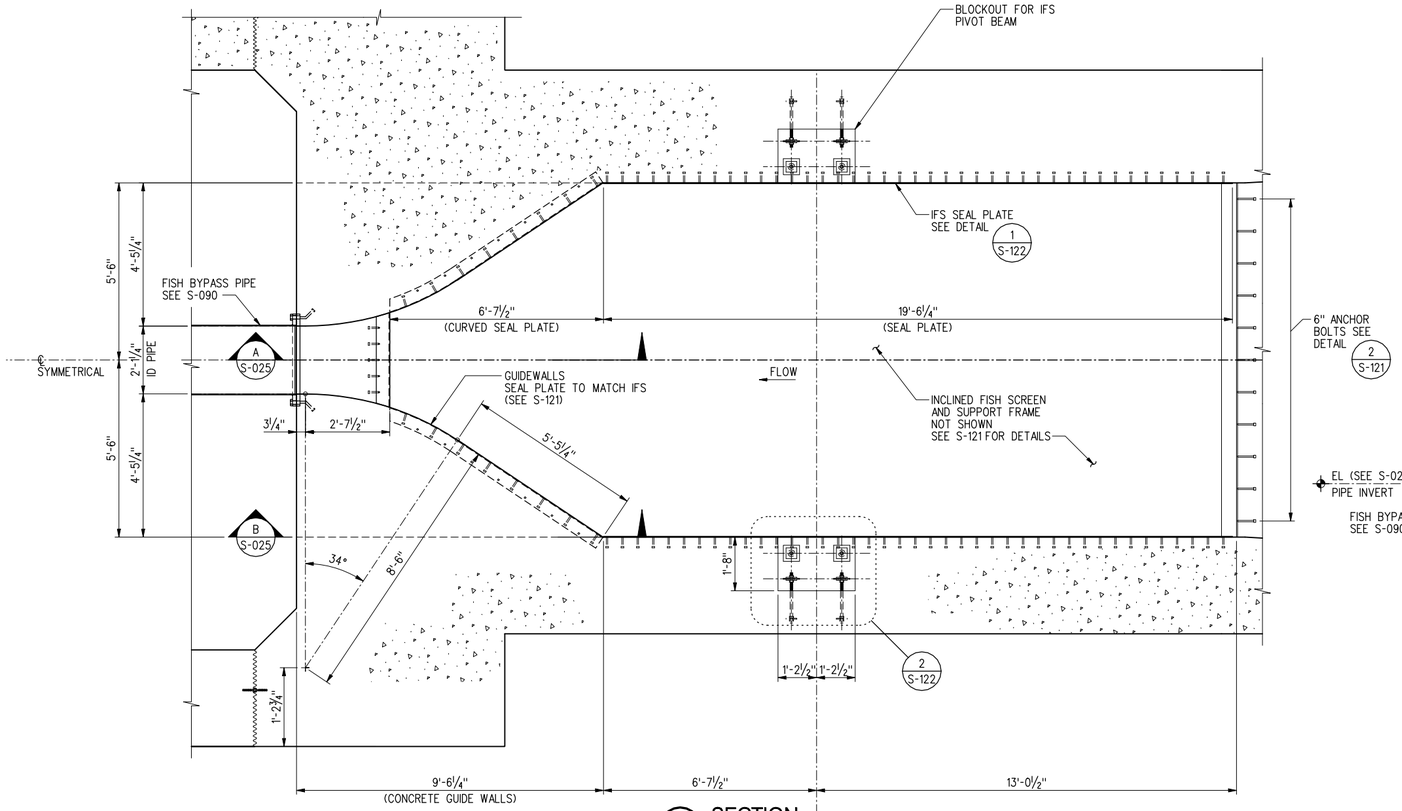

A SECTION
1/2"=1'-0"

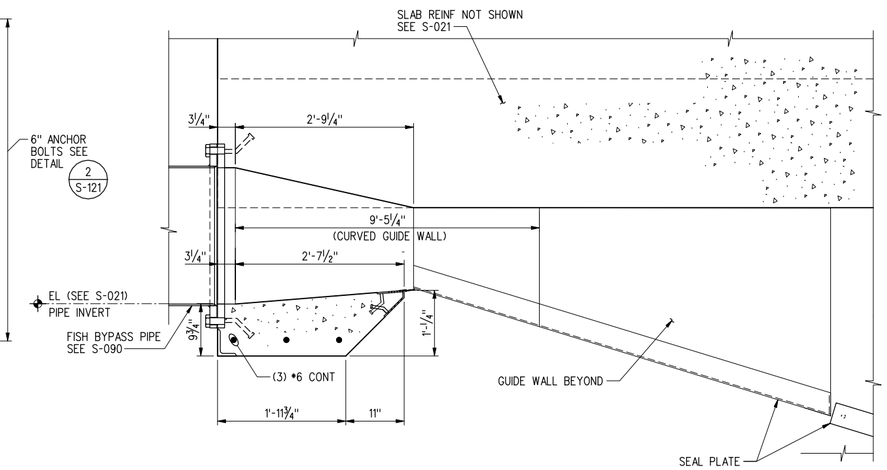

A SECTION
1"=1'-0"

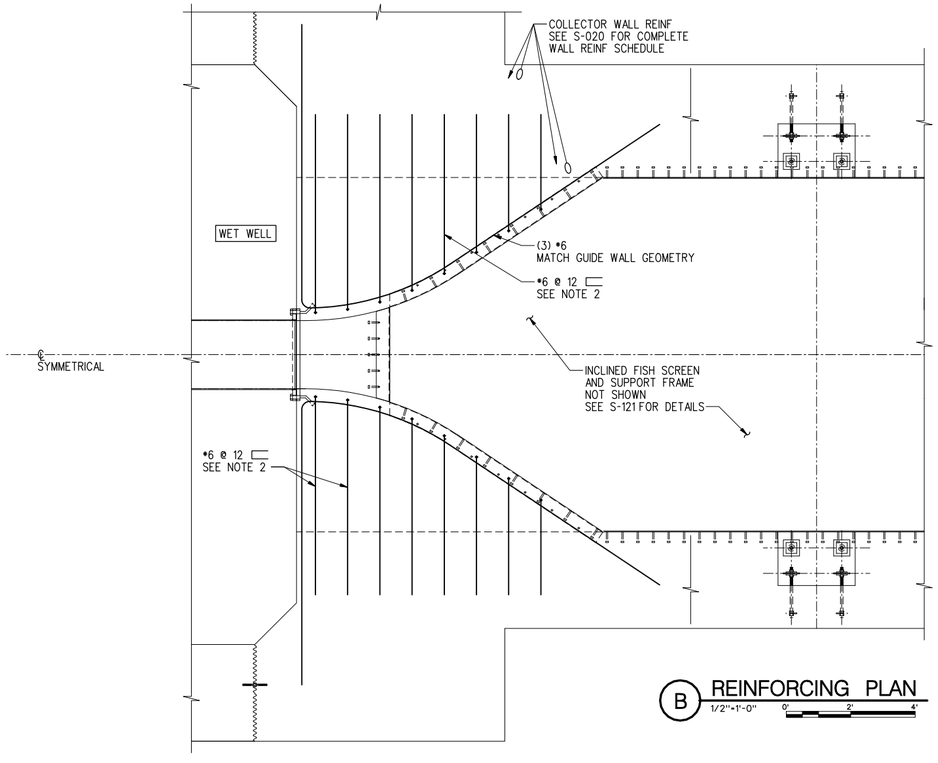

B REINFORCING PLAN
1/2"=1'-0"

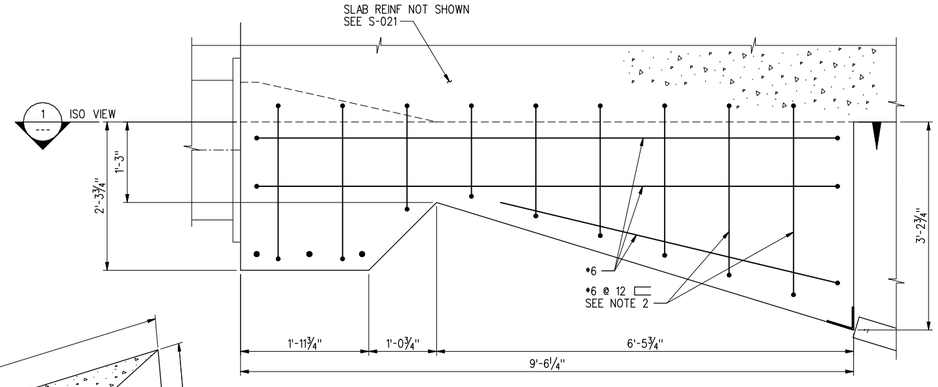

B SECTION
1"=1'-0"

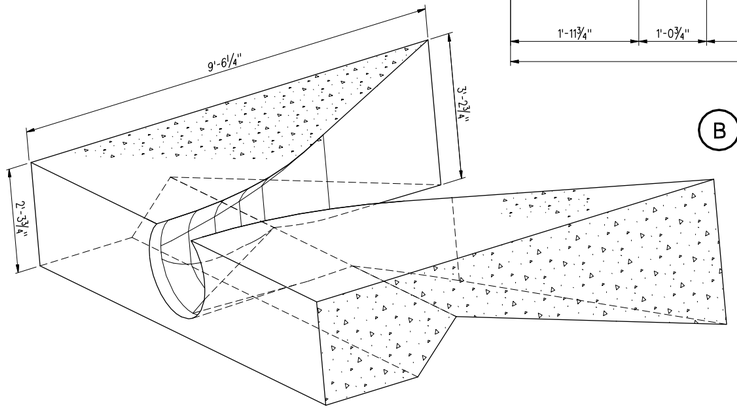

ISO VIEW OF CONCRETE GUIDE WALL TRANSITION SHAPE TO BYPASS PIPE (SIDE WALL, TOP SLAB, STEEL EMBEDMENTS, BYPASS PIPE, AND IFS ARE NOT SHOWN FOR CLARITY)

1 VIEW – GUIDE WALLS
NOT TO SCALE

US Army Corps of Engineers
Seattle District

Symbol	Description	Date	Appr.	Symbol	Description
		/ /			

U.S. ARMY ENGINEER DISTRICT, SEATTLE
CORPS OF ENGINEERS
SEATTLE, WASHINGTON

Designed by: X
Drawn by: X
Checked by: X
Date: 16 MAR 06
File #: E-56-14-19
Rev.

Prepared by:

ADDITIONAL WATER STORAGE PROJECT
HOWARD HANSON DAM
COLLECTOR
SECTIONS AND DETAILS
GREEN RIVER WASHINGTON

Plate number:
S-025
Sheet of

DATE AND TIME PLOTTED: 8/6/2008 11:47:51 AM DESIGN FILE: I:\AECDesigns\HHAW\Structural\HHAWS-1s-025.DGN

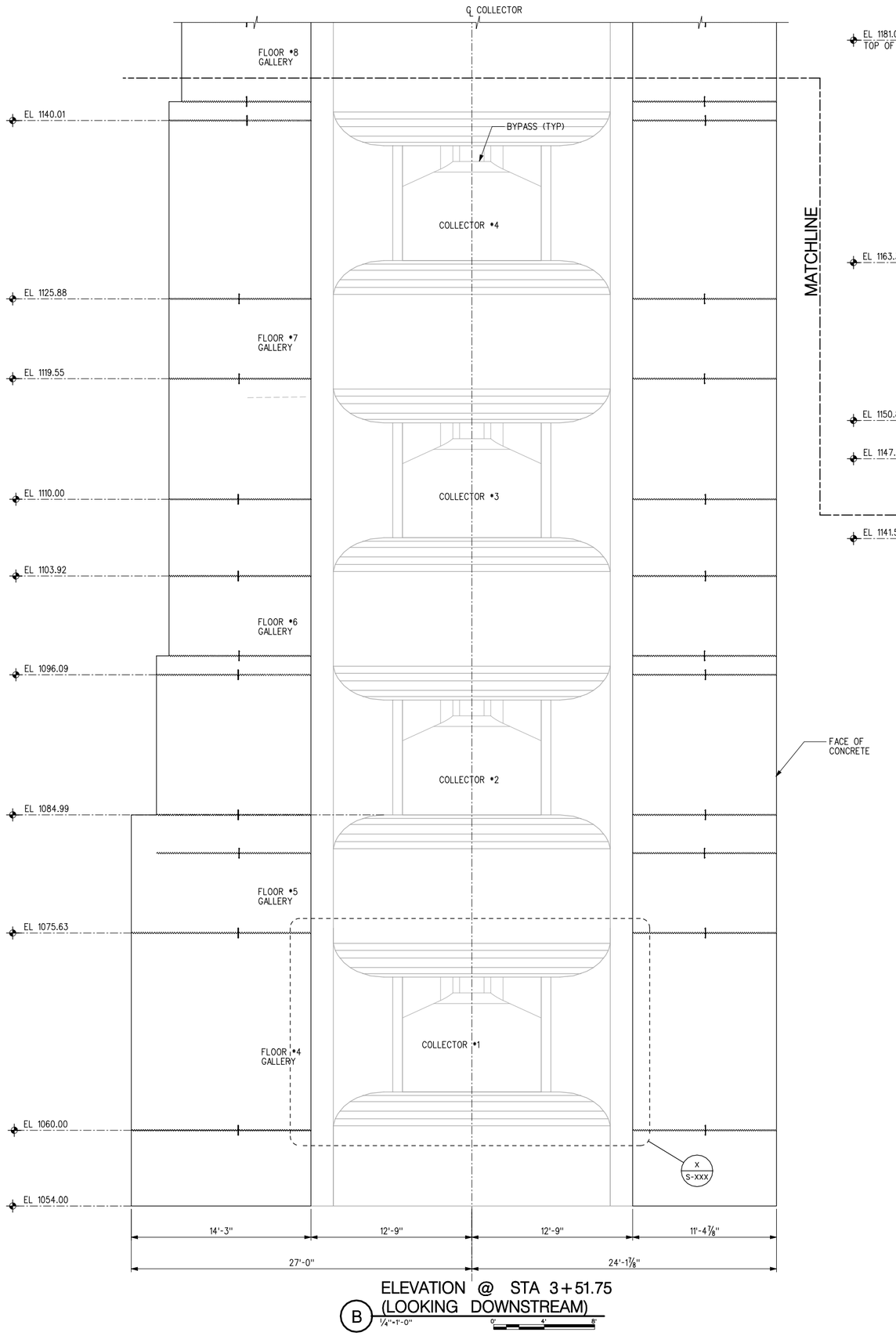

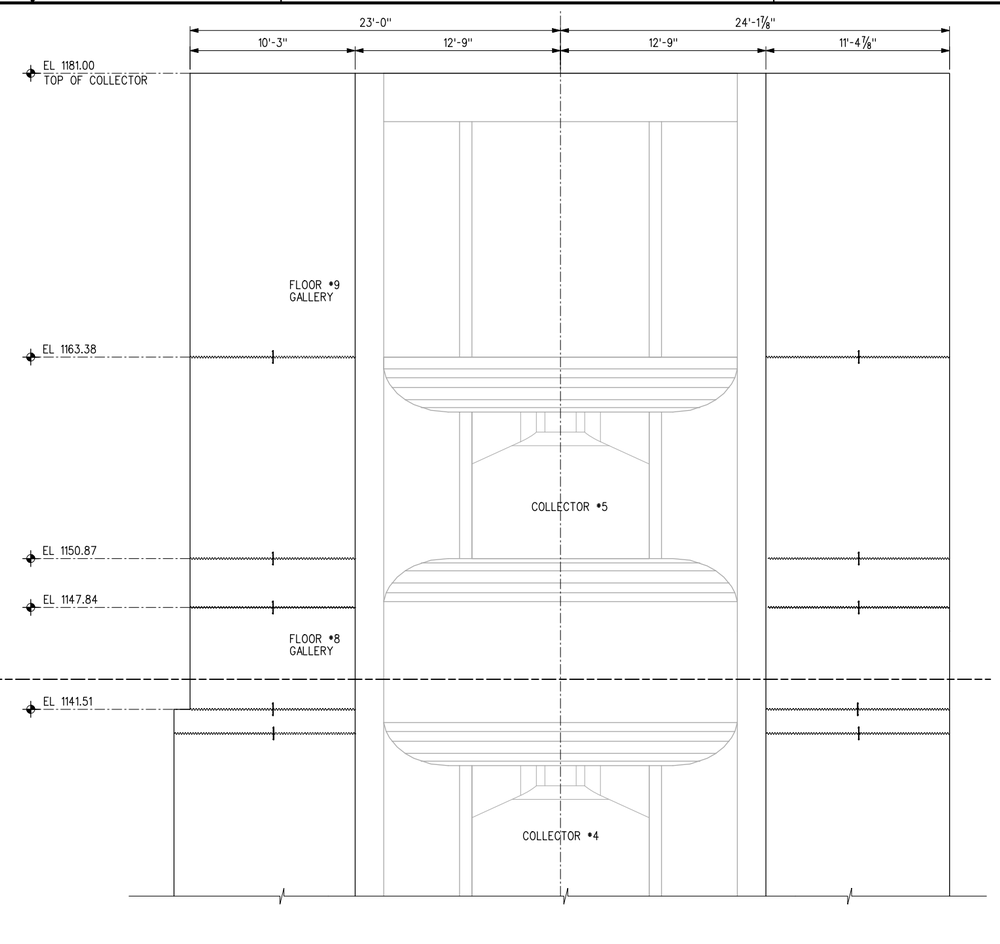

FACE OF CONCRETE

ELEVATION @ STA 3+51.75 (LOOKING DOWNSTREAM)

B 1/4"=1'-0" 0' 4' 8'

US Army Corps of Engineers
Seattle District

Symbol	Description
Appr.	
/ / Date	

Date: 16 MAR 06
File #: E-56-14-19
Rev.

Designed by: X
Drawn by: X
Checked by: X

U.S.ARMY ENGINEER DISTRICT,SEATTLE
CORPS OF ENGINEERS
SEATTLE, WASHINGTON
Prepared by:

ADDITIONAL WATER STORAGE PROJECT
HOWARD HANSON DAM
COLLECTOR SECTION @ STA 3+51.75
GREEN RIVER WASHINGTON

Plate number:
S-027
Sheet of

FILE: I:\AEC\Designs\HHAW\Structural\HHAWS-1s-027.DGN
DESIGN FILE:
DATE AND TIME PLOTTED: 8/6/2008 11:48:12 AM

9" WATERSTOP CONTINUOUS

9" WATERSTOP CONTINUOUS

2" SPONGE RUBBER

EL 1181.00
TOP OF COLLECTOR

EL 1177.53
CJ

EL 1116.05
CJ

COLLECTOR #3

MATCHLINE

EL 1163.80
CJ

EL 1160.39
CJ

EL 1094.09
CJ

COMPACTED
BACKFILL

COLLECTOR #2

EL 1084.99

TREMIE
CONCRETE

EL 1072.13
CJ

SPONGE
RUBBER

COLLECTOR #1

EL 1060.00
CJ

EL 1054.00
BOT EXCAVATION

14'-3" 12'-9" 12'-9" 11'-3"

23'-0" 24'-0"

10'-3" 12'-9" 12'-9" 11'-3"

2" SPONGE RUBBER

9" WATERSTOP CONTINUOUS

COLLECTOR #5

EL 1141.51

EL 1138.01
CJ

SPONGE
RUBBER

COMPACTED
BACKFILL

COLLECTOR #4

SPONGE RUBBER
CONTINUOUS BETWEEN
EXISTING COFFERDAM
NEW CONSTRUCTION

EXISTING 48" BYPASS

10" 10"

2'-6"

EL 1072.50

1'-0"

VOID FOR MECHANICAL
EQUIPMENT

SPONGE RUBBER

10" REFILL PIPE
SEE MECHANICAL DWGS

NOTE:
SEE S-011 FOR PLAN LAYOUT
FOR BLOCKOUT

ELEVATION @ STA 3+51.75
(LOOKING DOWNSTREAM)
A
1/4"=1'-0"
0' 4' 8'

1 REFILL PIPE BLOCKOUT
1"=1'-0"
0" 1" 2"

US Army Corps
of Engineers
Seattle District

Symbol	Date	Appr.	Description
	/ /		

Designed by: X
Drawn by: X
Checked by: X
Date: 16 MAR 06
File # E-56-14-19
Rev.

U.S.ARMY ENGINEER DISTRICT,SEATTLE
CORPS OF ENGINEERS
SEATTLE, WASHINGTON
Prepared by:

ADDITIONAL WATER STORAGE PROJECT
HOWARD HANSON DAM
COLLECTOR ELEVATION
@ STA 3+51.75
GREEN RIVER WASHINGTON

Plate
number:
S-027
Sheet of

DESIGN FILE: P:\AECDesigns\HHAW\Structural\HHAWS_ts-027.DGN
DATE AND TIME PLOTTED: 8/6/2008 11:48:16 AM

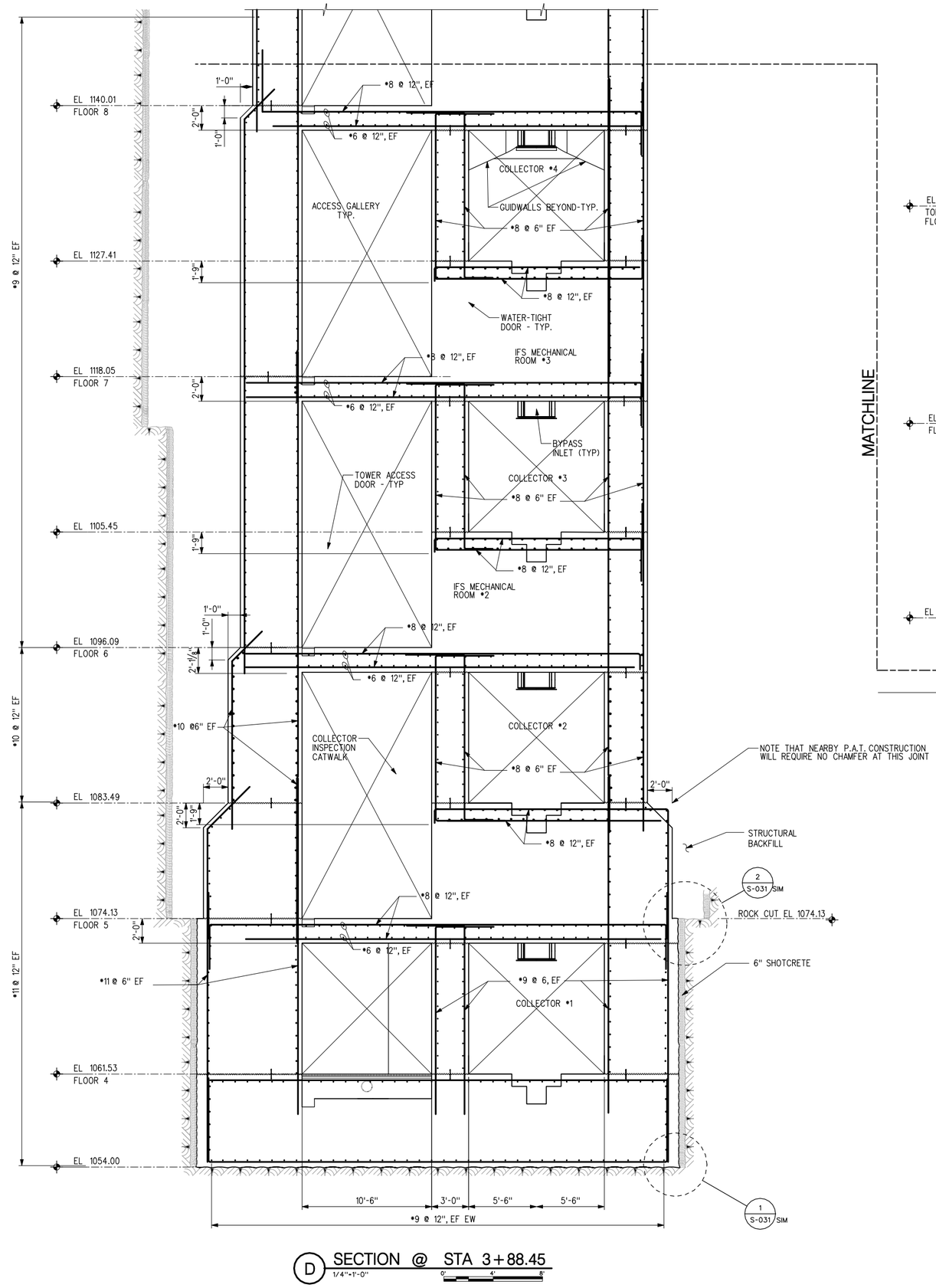

D SECTION @ STA 3+88.45
1/4"=1'-0"

MATCHLINE

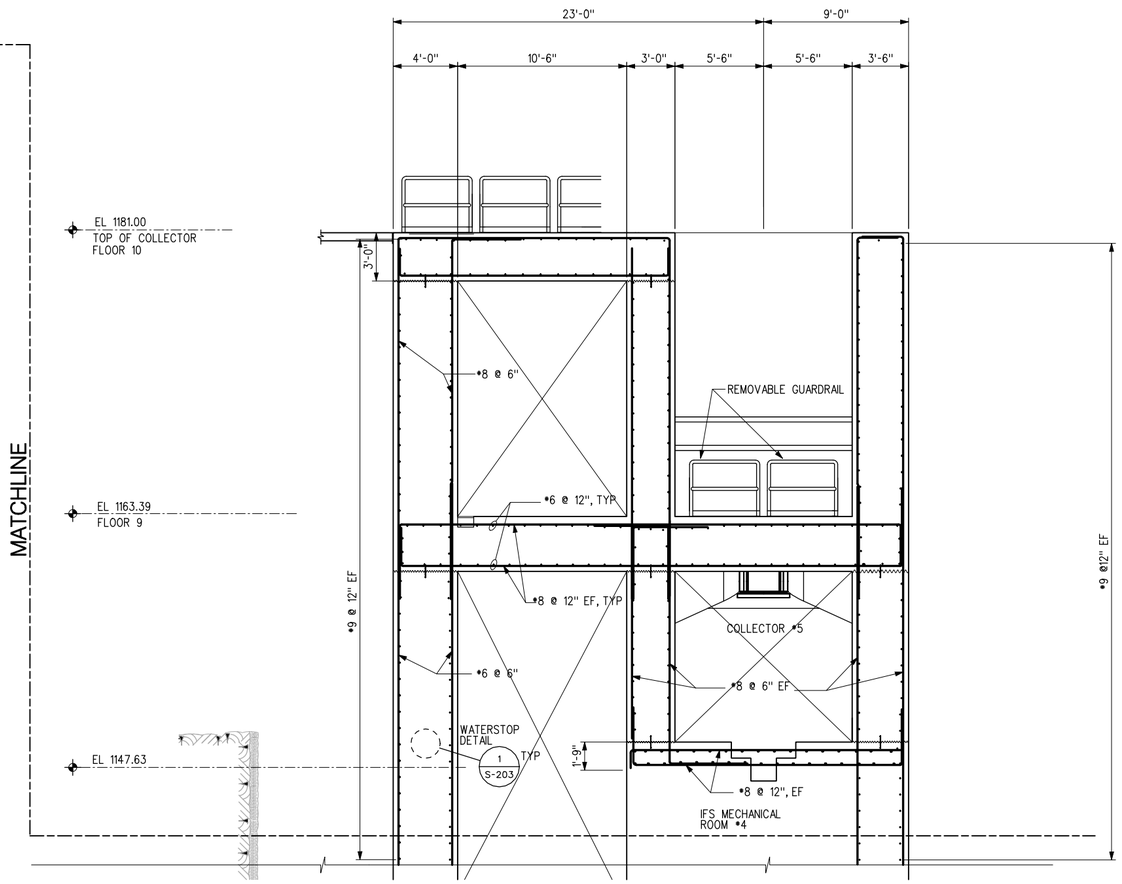

US Army Corps of Engineers
Seattle District

Symbol	Description	Appr.	Date
			/ /

Date: 16 MAR 06
File #
E-56-14-19
Rev.

Designed by: X
Drawn by: X
Checked by: X

U.S.ARMY ENGINEER DISTRICT,SEATTLE
CORPS OF ENGINEERS
SEATTLE, WASHINGTON
Prepared by:

ADDITIONAL WATER STORAGE PROJECT
HOWARD HANSON DAM

COLLECTOR SECTION @ STA 3+88.45

GREEN RIVER WASHINGTON

Plate number:
S-029
Sheet of

I:\AECDesigns\HHAW\Structural\HHAWS-1s-029.DGN
DESIGN FILE: 11:48:46 AM
DATE AND TIME PLOTTED: 8/6/2008

MATCHLINE S-030

GALLERY *3

*9 @ 12"

*9 @ 12"

GALLERY *2

COLLECTOR *2

COMPACTED BACKFILL

EL 1096.09
FLOOR 6

1'-0"

2'-0"

1'-0"

LIMITS OF EXCAVATION

SHOTCRETE SEE GEOTECHNICAL DWGS

*10 @ 6" EF

*10 @ 6" EF

5'-0"

2'-0"

EL 1083.49

2'-0"

*9 @ 12"

*10 @ 6"

COMPACTED BACKFILL

FLOOR DRAIN SEE 2 S-013

SEE SCHEDULE PLATE S-002

*9 @ 12"

ROCK CUT EL 1074.0
SEE GEOTECHNICAL DWGS

EL 1073.20

EL 1074.13
FLOOR 5

2'-0"

*9 @ 12"

GALLERY *1

*11 @ 6"

*11 @ 6"

COLLECTOR *1

*11 @ 12"

FLOOR GRATING SEE PLATE S-010

SEE MECH PLATES FOR PIPE SIZE AND LOCATION

*9 @ 12"

UNFORMED CONCRETE SURFACE (BELOW EL 1074.0

6" SHOTCRETE

EL 1061.53
FLOOR 4

2'-0"

*9 @ 12"

EL 1054.00

10'-6" 3'-0" 11'-0"

A SECTION @ STA 3+88.45 - I
1/2"=1'-0"
0" 4' 8'

US Army Corps of Engineers
Seattle District

Symbol	Description	Appr.	Symbol	Description
		/ /	Date	

Date: 16 MAR 06
File #: E-56-14-19
Rev:

Designed by: X
Drawn by: X
Checked by: X

U.S.ARMY ENGINEER DISTRICT,SEATTLE
CORPS OF ENGINEERS
SEATTLE, WASHINGTON
Prepared by:

ADDITIONAL WATER STORAGE PROJECT
HOWARD HANSON DAM
COLLECTOR SECTION
@ STA 3+88.45 - I
GREEN RIVER WASHINGTON

Plate number:
S-029
Sheet of

I:\AECDesigns\HHAW\Structural\HHAWS-1s-029.DGN
DESIGN FILE:
11:48:52 AM
DATE AND TIME PLOTTED: 8/6/2008

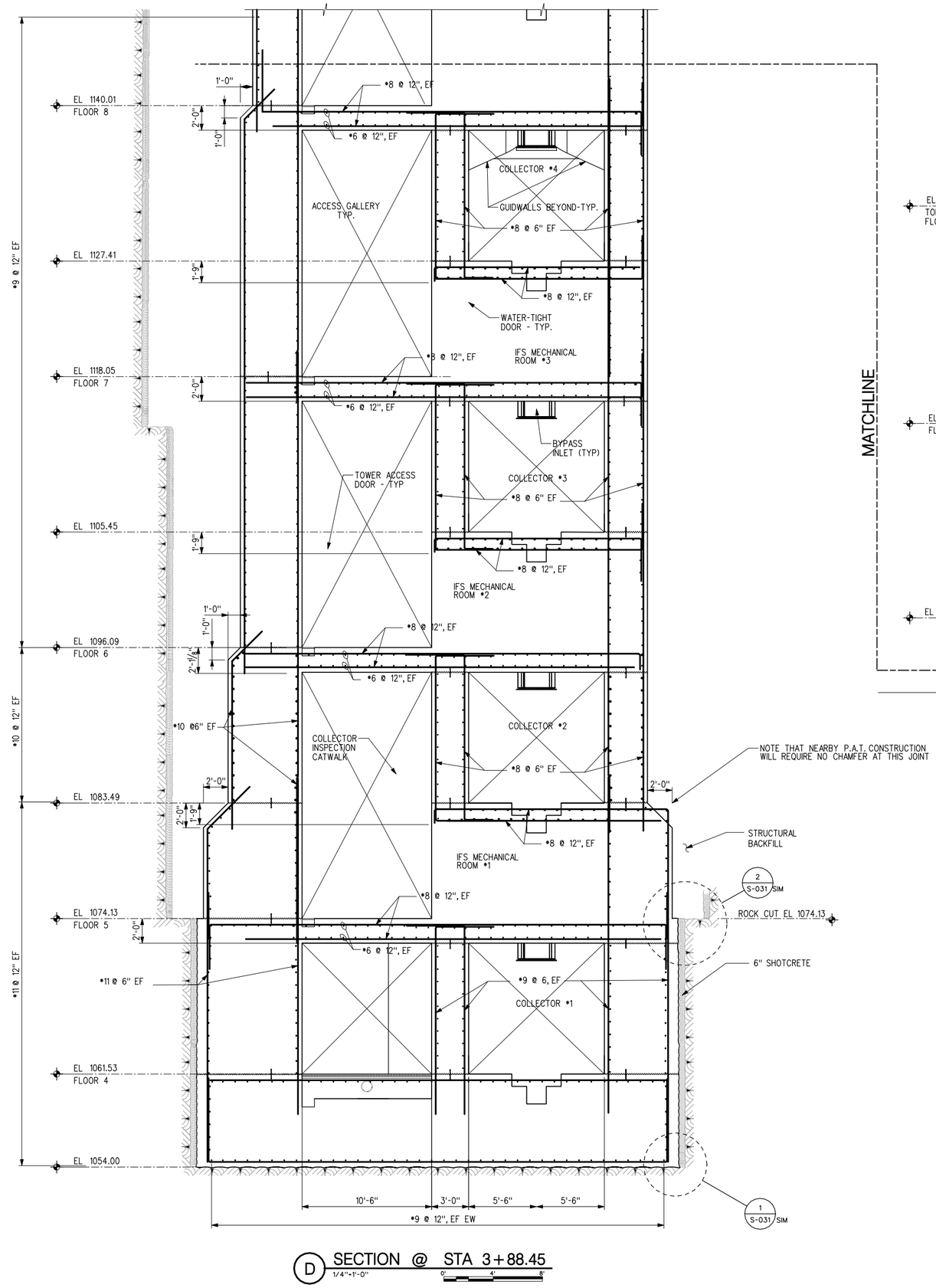

MATCHLINE

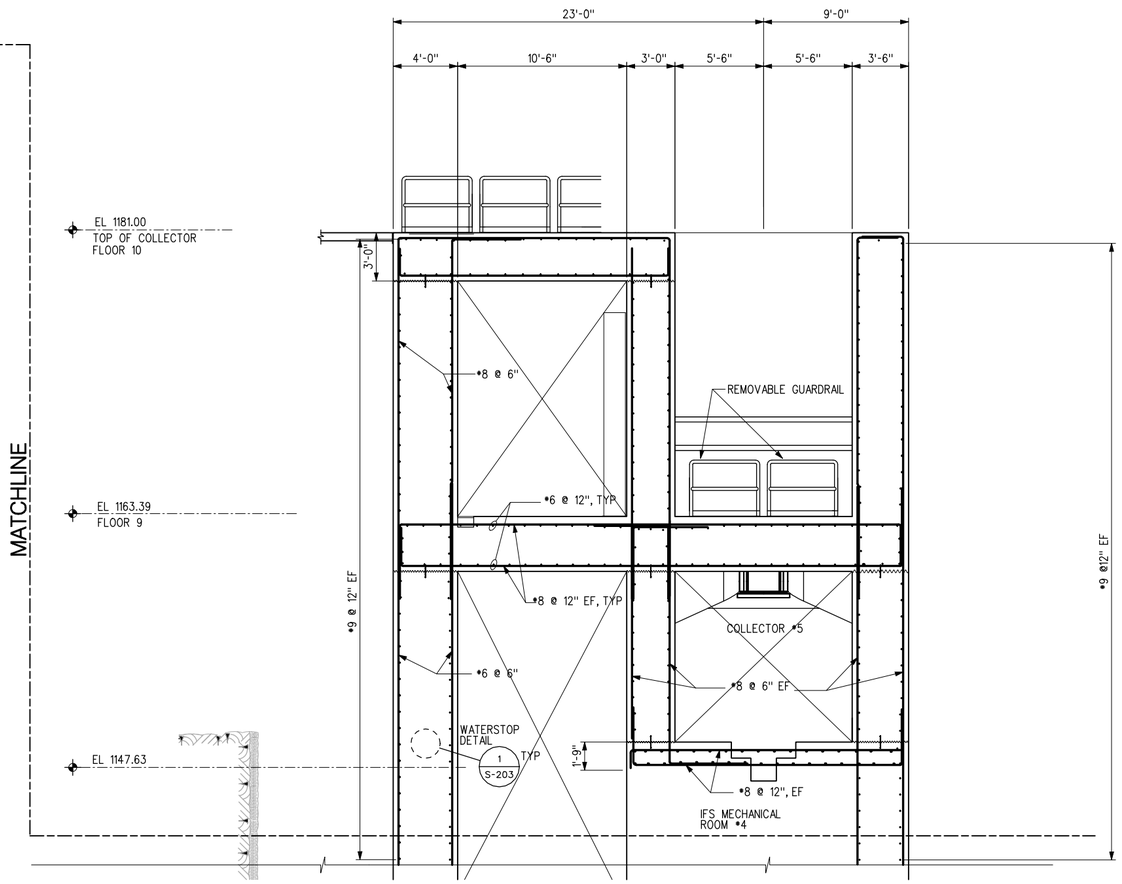

D SECTION @ STA 3+88.45
1/4"=1'-0"
0' 4' 8'

US Army Corps of Engineers
Seattle District

Symbol	Description	Appr.	Date
			/ /

Date: 16 MAR 06
File #: E-56-14-19
Rev:

Designed by: X
Drawn by: X
Checked by: X

U.S.ARMY ENGINEER DISTRICT,SEATTLE
CORPS OF ENGINEERS
SEATTLE, WASHINGTON
Prepared by:

ADDITIONAL WATER STORAGE PROJECT
HOWARD HANSON DAM
COLLECTOR SECTION @ STA 3+88.45
GREEN RIVER WASHINGTON

Plate number:
S-029
Sheet of

DESIGN FILE: I:\AECDesigns\HHAW\Structural\HHAWS_ts-030.DGN
DATE AND TIME PLOTTED: 8/6/2008 11:49:17 AM

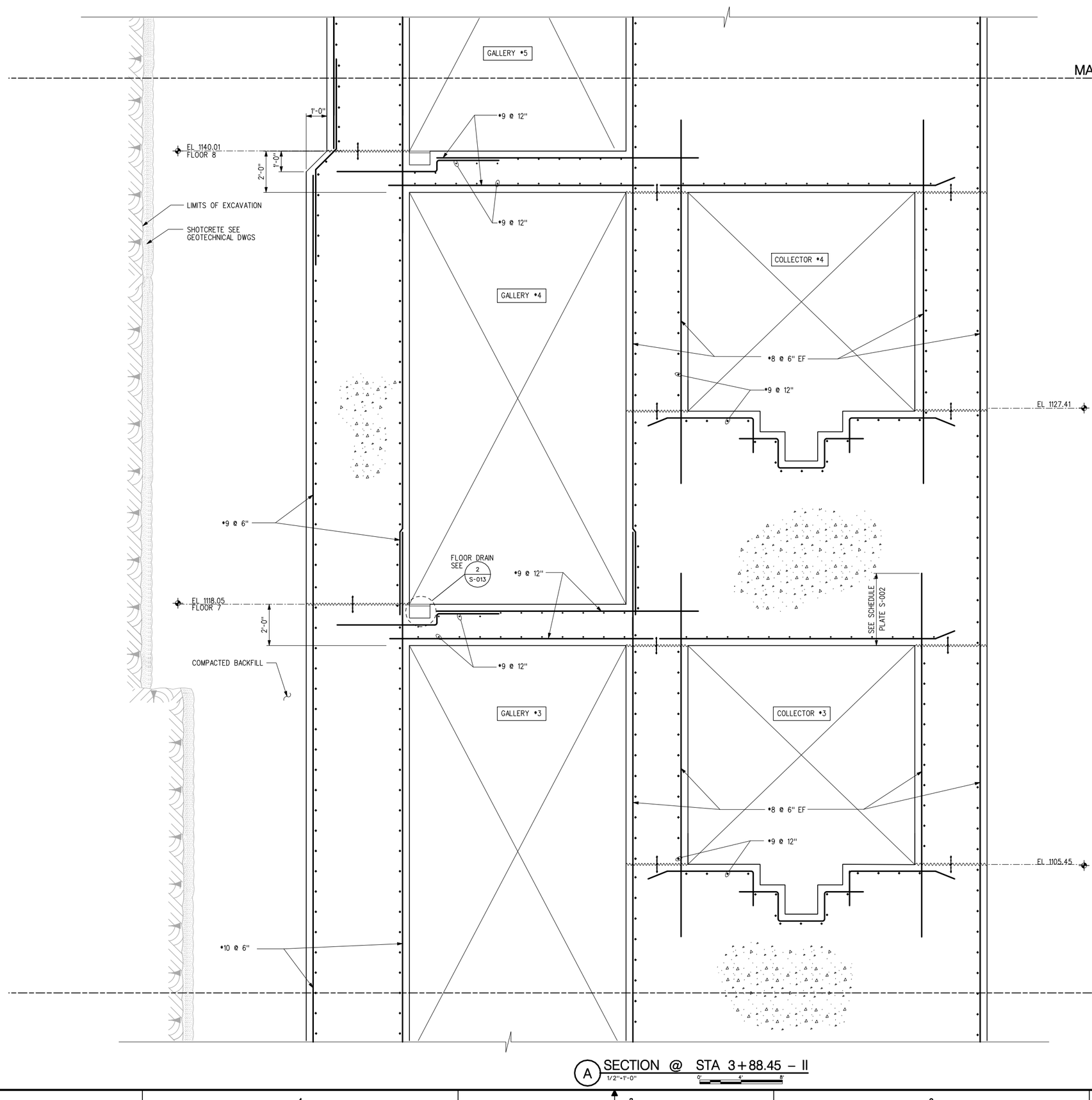

A SECTION @ STA 3+88.45 – II
1/2"=1'-0"
0' 4' 8'

US Army Corps of Engineers
Seattle District

Symbol	Description
Appr.	
Date	

U.S.ARMY ENGINEER DISTRICT,SEATTLE
CORPS OF ENGINEERS
SEATTLE, WASHINGTON
Prepared by:

Designed by: X
Drawn by: X
Checked by: X
Date: 16 MAR 06
File • E-56-14-19
Rev.

ADDITIONAL WATER STORAGE PROJECT
HOWARD HANSON DAM
GREEN RIVER WASHINGTON

COLLECTOR SECTION @ STA 3+88.45 - II

Plate number:
S-030
Sheet of

DESIGN FILE: I:\AECDesigns\HHAW\Structural\HHAWS_ts-030.DGN
DATE AND TIME PLOTTED: 8/6/2008 11:49:23 AM

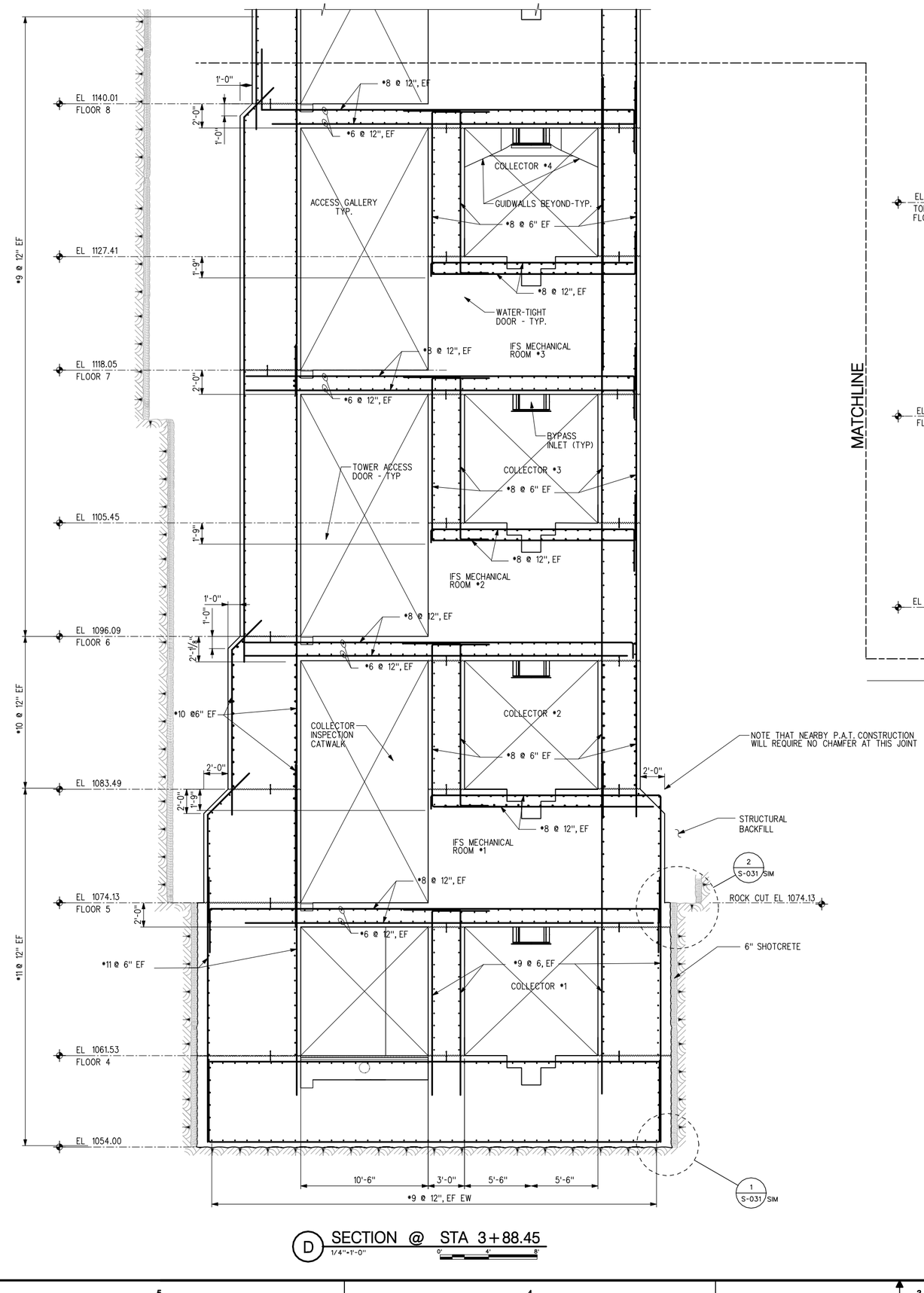

D SECTION @ STA 3+88.45
1/4"=1'-0"

MATCHLINE

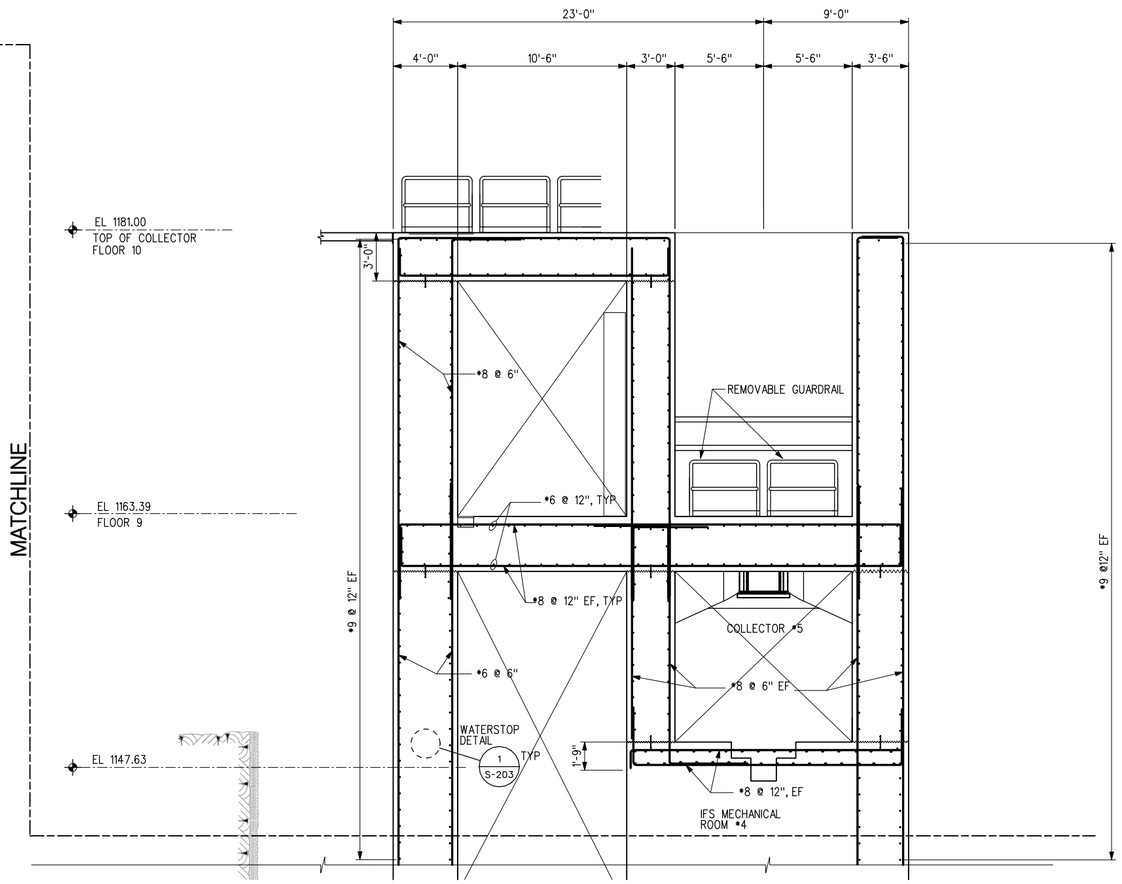

US Army Corps of Engineers
Seattle District

Symbol	Description	Appr.	Date
			/ /

Date: 16 MAR 06
File #: E-56-14-19
Rev:

Designed by: X
Drawn by: X
Checked by: X

U.S.ARMY ENGINEER DISTRICT,SEATTLE
CORPS OF ENGINEERS
SEATTLE, WASHINGTON
Prepared by:

ADDITIONAL WATER STORAGE PROJECT
HOWARD HANSON DAM

COLLECTOR SECTION @ STA 3+88.45

GREEN RIVER WASHINGTON

Plate number:
S-029
Sheet of

I:\AECDesigns\HHAW\Structural\HHAWS-ts-031.DGN
DESIGN FILE:
11:49:45 AM
DATE AND TIME PLOTTED: 8/6/2008

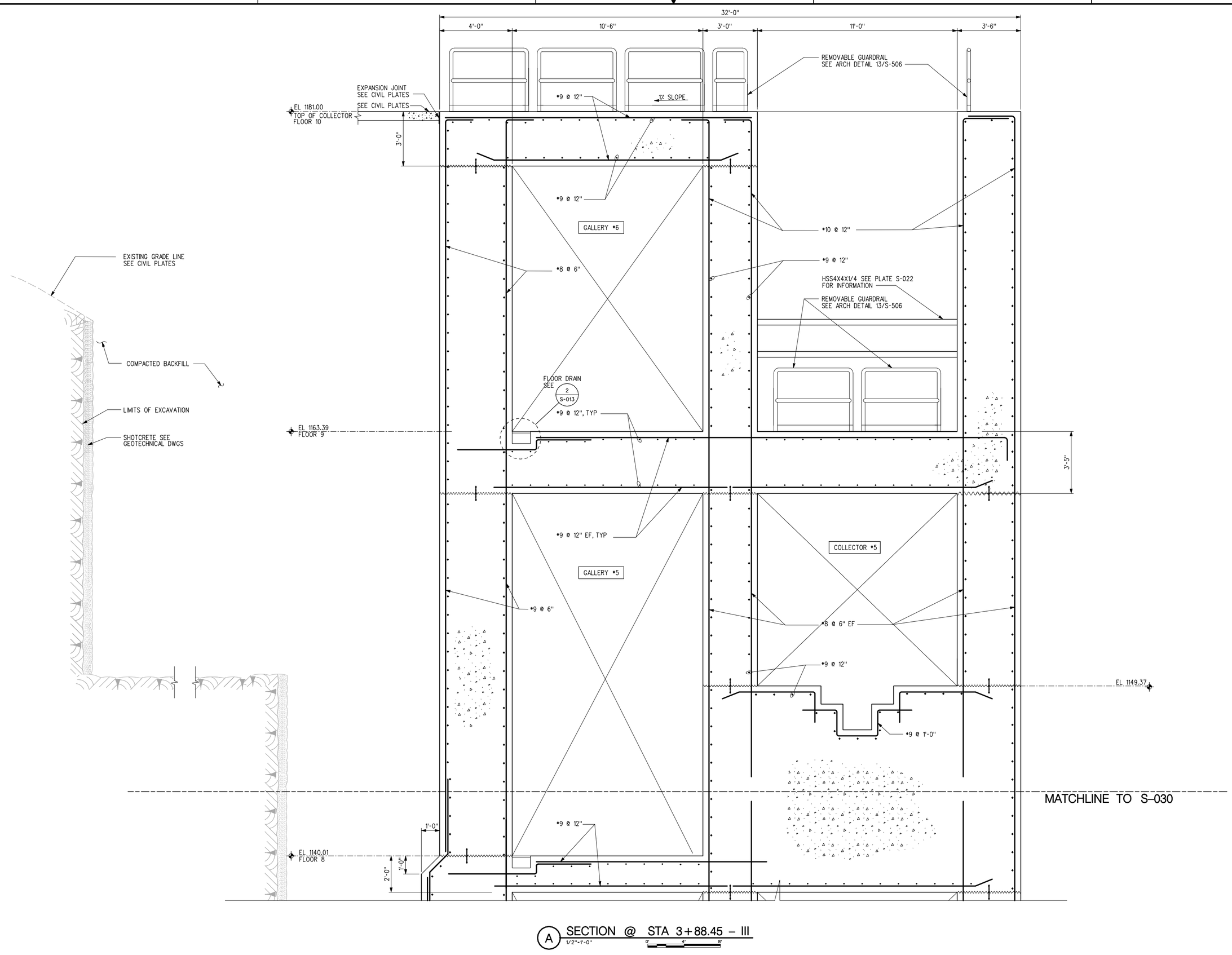

A SECTION @ STA 3+88.45 – III
1/2"=1'-0"
0' 4' 8'

US Army Corps of Engineers
Seattle District

Symbol	Description	Appr.	Date
			/ /

U.S.ARMY ENGINEER DISTRICT,SEATTLE
CORPS OF ENGINEERS
SEATTLE, WASHINGTON

Designed by: X
Drawn by: X
Checked by: X
Prepared by:

Date: 16 MAR 06
File #
E-56-14-19
Rev.

ADDITIONAL WATER STORAGE PROJECT
HOWARD HANSON DAM
GREEN RIVER WASHINGTON

COLLECTOR SECTION @ STA 3+88.45- III

Plate number:
S-031
Sheet of

DESIGN FILE: F:\AECD\designs\HHAW\Structural\HHAWS-1s-031.DGN
DATE AND TIME PLOTTED: 8/6/2008 11:49:51 AM

NOTES:

1. CONCRETE DIMENSIONS SHOWN ARE CONSISTENT WITH STRUCTURAL DESIGN REQUIREMENTS. ACTUAL GEOMETRY AND WALL THICKNESS MAY VARY WHEN CAST AGAINST UNFORMED EDGE OF EXCAVATION.
2. GEOTECHNICAL ROCK ANCHORS ARE NOT SHOWN. SEE PHASE II, EXCAVATION AND TUNNELING FOR SHOTCRETE AND ROCK SUPPORT DETAIL REQUIREMENTS.
3. FOR REINFORCING, SEE PLATE NO. S-0xx
4. COORDINATE WITH MECHANICAL DRAWINGS FOR ANY PENETRATIONS THROUGH GRATING COVER OR FOR ANY ACCESS REQUIRED FOR EQUIPMENT LOCATED IN SUMP PUMP BASIN.
5. COORDINATE SIZE AND LOCATION OF OPENINGS WITH MECH DWGS.

TABLE - PARABOLIC CURVE DATA

x =	0'-0"	1'-0"	1'-6"	2'-0"	2'-6"	3'-0"	3'-6"
y =	5.33'	5.29'	5.24'	5.16'	5.06'	4.94'	4.79'
x =	4'-0"	4'-6"	5'-0"	5'-6"	6'-0"	6'-6"	7'-0"
y =	4.62'	4.41'	4.16'	3.87'	3.53'	3.11'	2.59'
x =	7'-6"	7'-7"	7'-8"	7'-9"	7'-10"	7'-11"	8'-0"
y =	1.87'	1.71'	1.54'	1.34'	1.10'	0.80'	0.21'

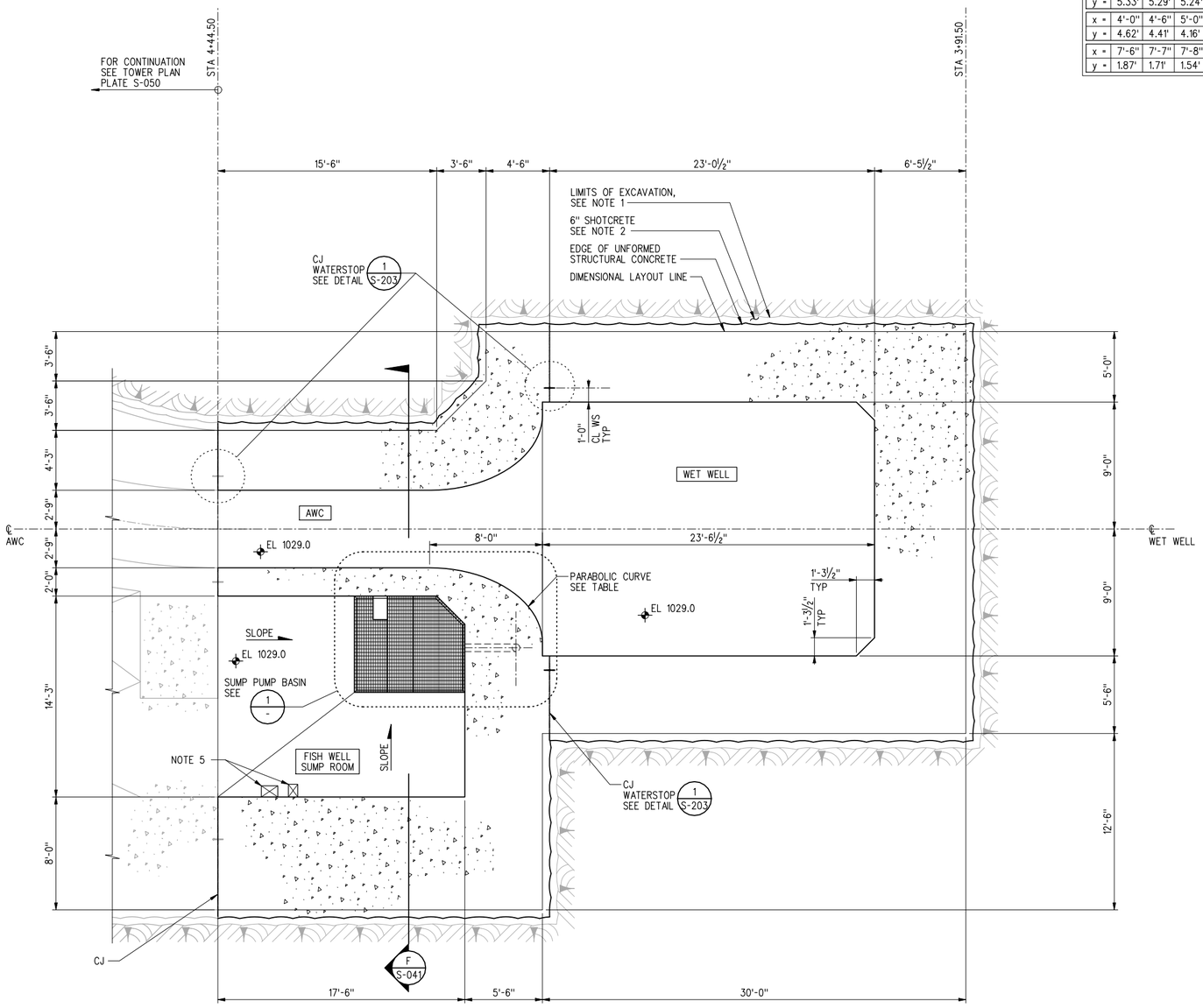

A PLAN FLOOR 1
EL 1029.0
¼"=1'-0"

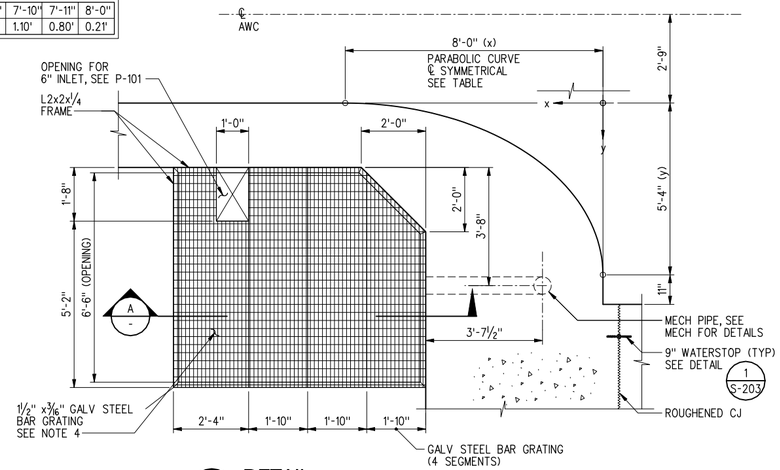

1 DETAIL
½"=1'-0"

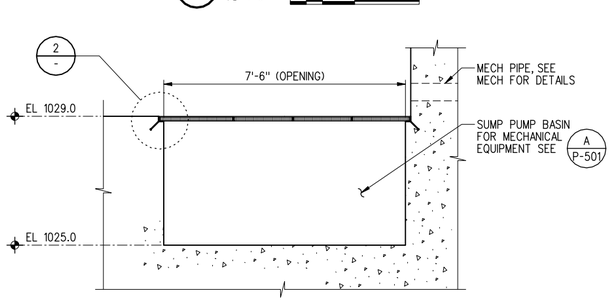

A SECTION
½"=1'-0"

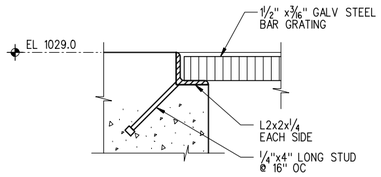

2 DETAIL
3"=1'-0"

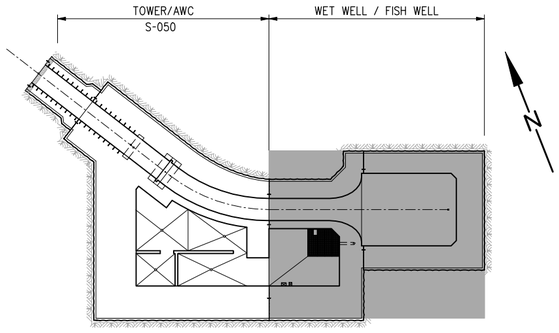

KEY PLAN

US Army Corps of Engineers
Seattle District

Symbol	Description	Date	Appr.	Symbol	Description
		/ /			

Designed by:
Drawn by:
Checked by:
Date: 16 MAR 06
File # E-56-14-19
Rev.

U.S.ARMY ENGINEER DISTRICT,SEATTLE
CORPS OF ENGINEERS
SEATTLE, WASHINGTON
Prepared by:

ADDITIONAL WATER STORAGE PROJECT
HOWARD HANSON DAM
WET WELL/FISH WELL
PLAN AT EL 1029.0
GREEN RIVER WASHINGTON

Plate number:
S-034
Sheet of

DATE AND TIME PLOTTED: 8/6/2008 11:50:08 AM DESIGN FILE: I:\AECDesigns\HHAW\Structural\HHAWS-1s-034.DGN

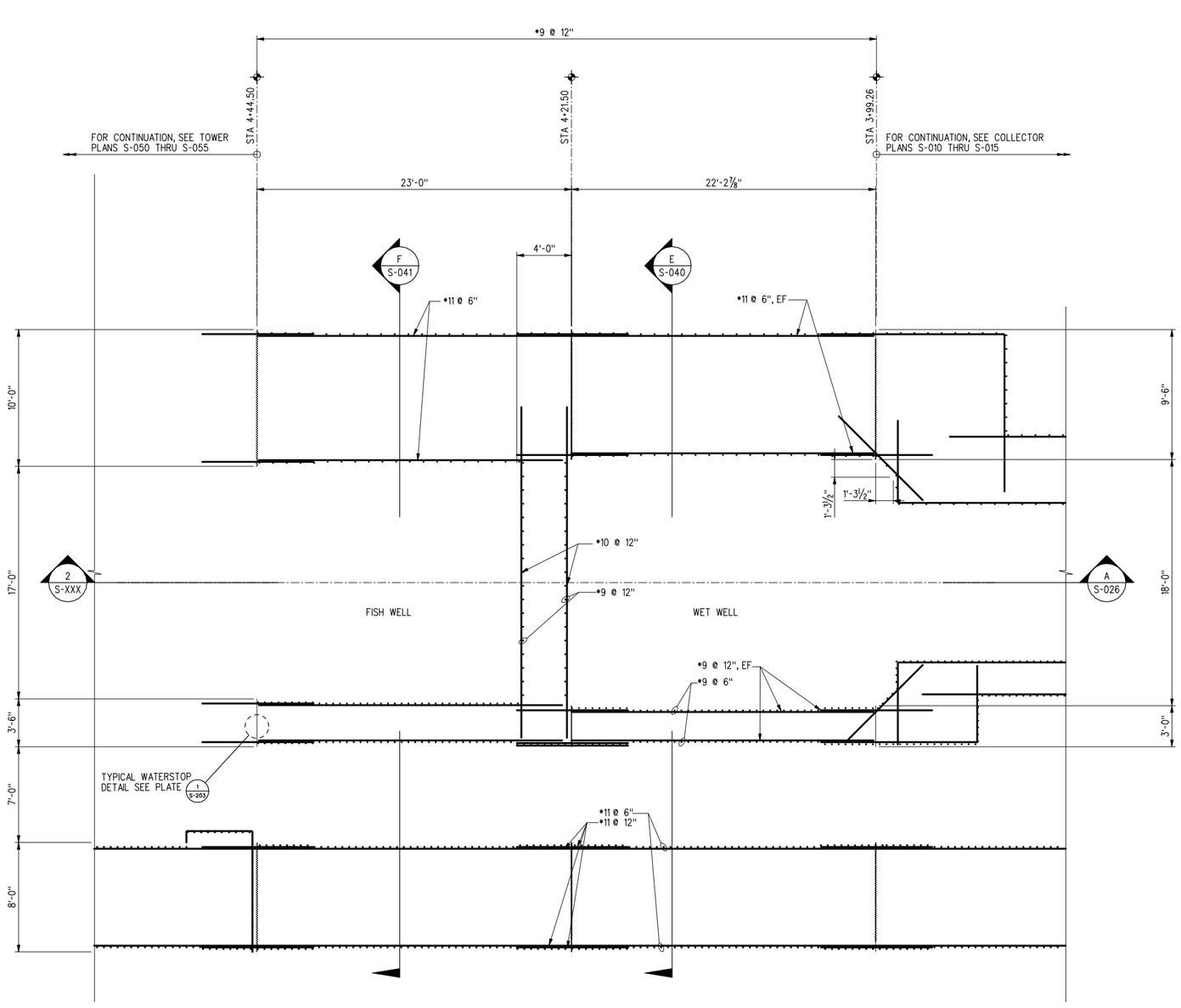

X PLAN EL 1061.5 (EL. 1074.13 SIM.)
1/4"=1'-0" 0' 4' 8'

NOTES:

1. SEE PLATE S-040 AND S-041 FOR MORE REINFORCING INFO.

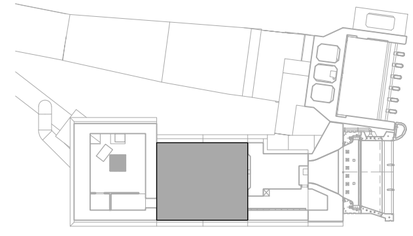

KEY PLAN

US Army Corps of Engineers
Seattle District

Symbol	Description	Appr.	Date
			/ /

U.S. ARMY ENGINEER DISTRICT, SEATTLE
CORPS OF ENGINEERS
SEATTLE, WASHINGTON
Prepared by:

Designed by:
Drawn by:
Checked by:
Date: 16 MAR 06
File # E-56-14-19
Rev.

ADDITIONAL WATER STORAGE PROJECT
HOWARD HANSON DAM
GREEN RIVER WASHINGTON

WET WELL/FISH WELL PLAN AT EL 1061.5

Plate number: S-035
Sheet of

DESIGN FILE: I:\AECDesigns\HHAWS\Structural\HHAWS-1s-035.DGN
DATE AND TIME PLOTTED: 8/6/2008 11:50:29 AM

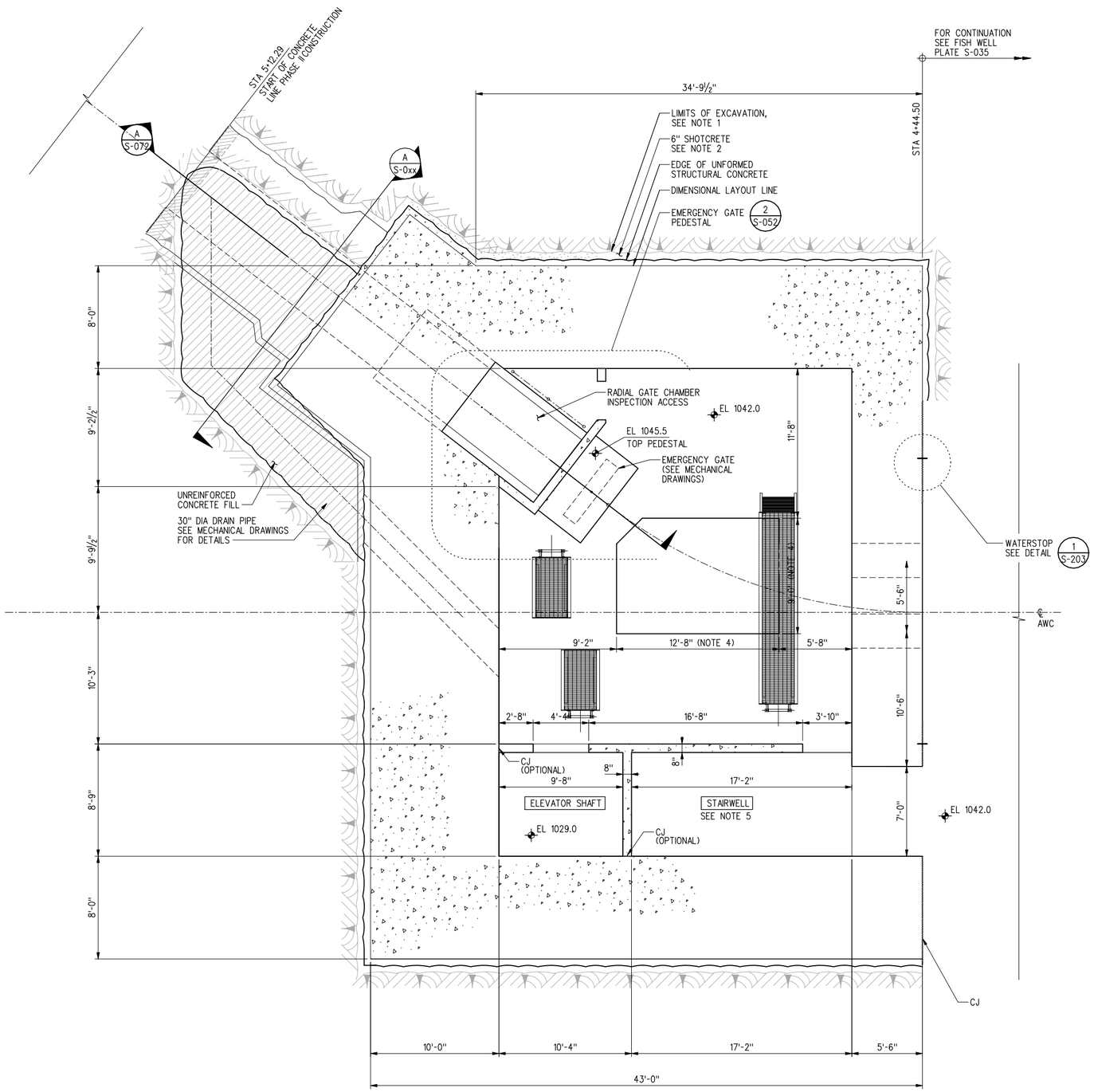

A PLAN FLOOR 2
EL 1042
¼"=1'-0"

NOTES:

1. CONCRETE DIMENSIONS SHOWN ARE CONSISTENT WITH STRUCTURAL DESIGN REQUIREMENTS. ACTUAL GEOMETRY AND WALL THICKNESS MAY VARY WHEN CAST AGAINST UNFORMED EDGE OF EXCAVATION.
2. GEOTECHNICAL ROCK ANCHORS ARE NOT SHOWN. SEE PHASE II, EXCAVATION AND TUNNELING FOR SHOTCRETE AND ROCK SUPPORT DETAIL REQUIREMENTS.
3. FOR REINFORCING, SEE PLATE NO. S-0xx
4. COORDINATE WITH GATE MANUFACTURER FOR FINAL STRUCTURAL BLOCKOUT DIMENSIONS. DIMENSIONS SHOWN ARE FOR APPROXIMATE STRUCTURAL LAYOUT. SEE MECHANICAL DRAWINGS FOR ADDITIONAL INFORMATION.
5. SEE ARCHITECTURAL DRAWINGS FOR STAIR DETAILS.

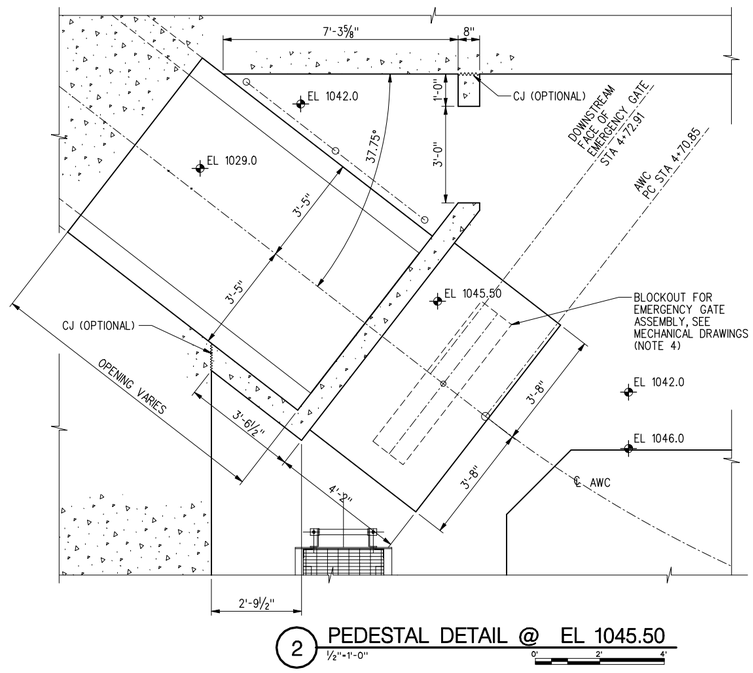

2 PEDESTAL DETAIL @ EL 1045.50
½"=1'-0"

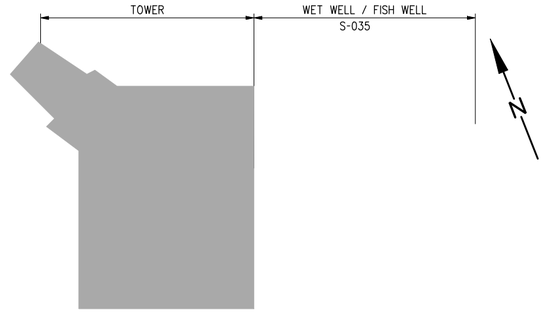

KEY PLAN

US Army Corps of Engineers
Seattle District

Symbol	Date	Appr.	Description
	/ /		

Date: 16 MAR 06
File #
E-56-14-19
Rev.

Designed by: X
Drawn by: X
Checked by: X

U.S.ARMY ENGINEER DISTRICT,SEATTLE
CORPS OF ENGINEERS
SEATTLE, WASHINGTON
Prepared by:

ADDITIONAL WATER STORAGE PROJECT
HOWARD HANSON DAM
GREEN RIVER WASHINGTON

TOWER PLAN @
EL 1042.0

Plate number:
S-051
Sheet of

I:\AECDesigns\HHAW\Structural\HHAWS_ts-035.DGN
DESIGN FILE:
11:50:31 AM
DATE AND TIME PLOTTED: 8/6/2008

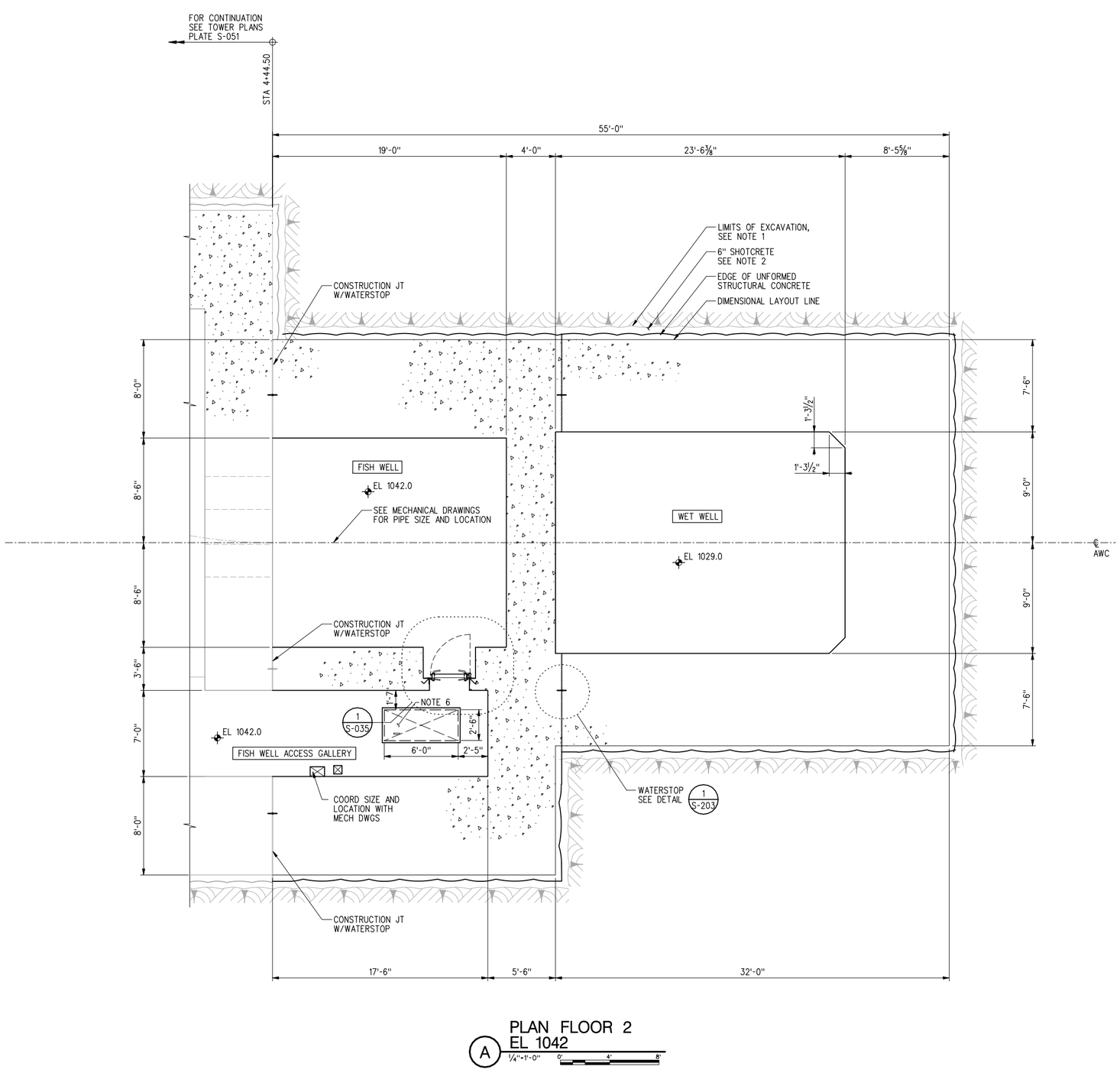

A PLAN FLOOR 2
EL 1042
¼"=1'-0"

NOTES:

1. CONCRETE DIMENSIONS SHOWN ARE CONSISTENT WITH STRUCTURAL DESIGN REQUIREMENTS. ACTUAL GEOMETRY AND WALL THICKNESS MAY VARY WHEN CAST AGAINST UNFORMED EDGE OF EXCAVATION.
2. GEOTECHNICAL ROCK ANCHORS ARE NOT SHOWN. SEE PHASE II, EXCAVATION AND TUNNELING FOR SHOTCRETE AND ROCK SUPPORT DETAIL REQUIREMENTS.
3. FOR REINFORCING, SEE PLATE NO. S-0xx
4. COORDINATE WITH GATE MANUFACTURER FOR FINAL STRUCTURAL BLOCKOUT DIMENSIONS. DIMENSIONS SHOWN ARE FOR APPROXIMATE STRUCTURAL LAYOUT. SEE MECHANICAL DRAWINGS FOR ADDITIONAL INFORMATION.
5. SEE GENERAL NOTES FOR HYDROSTATIC DESIGN LOADS FOR ALL WATER-TIGHT HATCHES AND DOORS. ALL HATCHES AND DOORS OPEN INTO FLOW AS SHOWN
6. ALUMINUM FLOOR ACCESS DOOR RATED FOR MINIMUM 100 PSF. COMPLETE WITH ANGLE FRAME, FLUSH DOOR HANDLE AND AUTOMATIC HOLD OPEN ARM. TOP OF DOOR FLUSH WITH FLOOR.

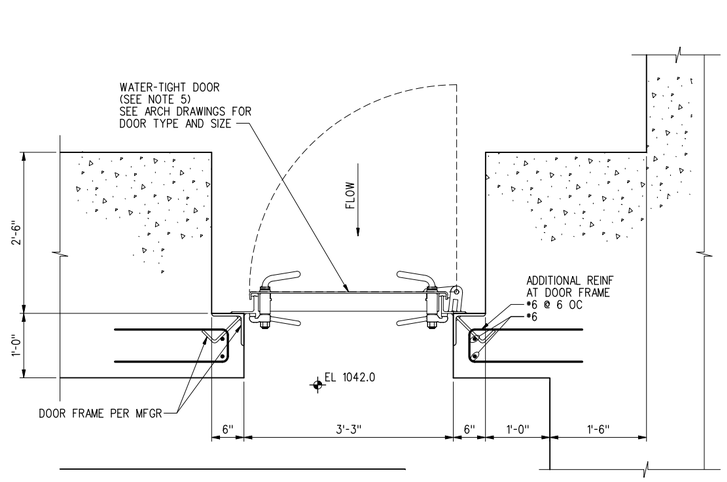

1 FISH WELL ACCESS
1"=1'-0"

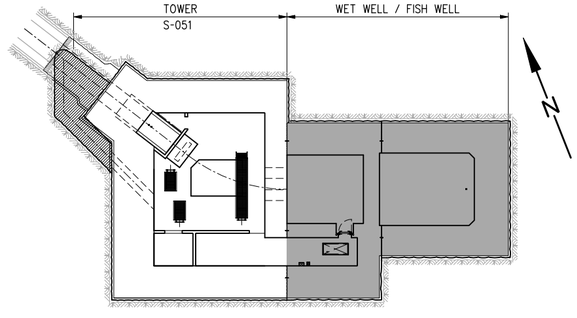

KEY PLAN

US Army Corps of Engineers
Seattle District

Symbol	Description	Date	Appr.	Symbol	Description
		/ /			

Designed by:
Drawn by:
Checked by:
Date: 16 MAR 06
File # E-56-14-19
Rev.

U.S.ARMY ENGINEER DISTRICT,SEATTLE
CORPS OF ENGINEERS
SEATTLE, WASHINGTON
Prepared by:

ADDITIONAL WATER STORAGE PROJECT
HOWARD HANSON DAM
WET WELL/FISH WELL
@ PLAN EL 1042.0
GREEN RIVER WASHINGTON

Plate number:
S-035
Sheet of

DATE AND TIME PLOTTED: 8/6/2008 11:50:33 AM DESIGN FILE: I:\AECDesigns\HHAW\Structural\HHAWS-1s-035.DGN

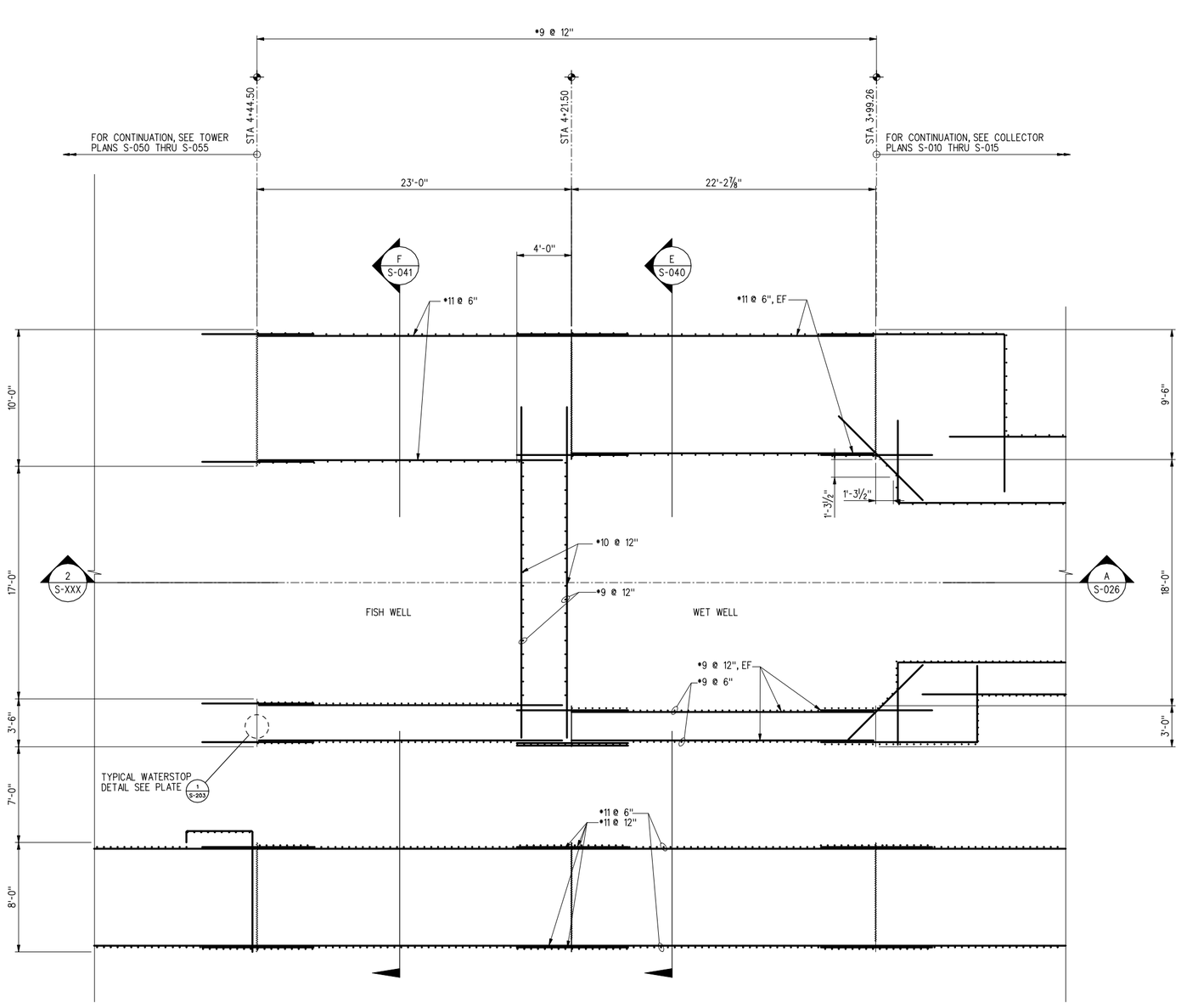

X PLAN EL 1061.5 (EL. 1074.13 SIM.)
1/4"=1'-0" 0' 4' 8'

NOTES:

1. SEE PLATE S-040 AND S-041 FOR MORE REINFORCING INFO.

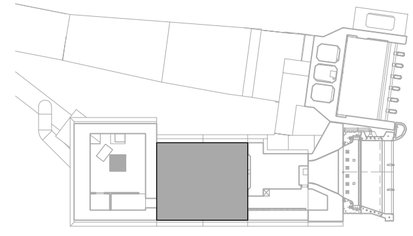

KEY PLAN

US Army Corps of Engineers
Seattle District

Symbol	Description	Appr.	Date
			/ /

Designed by:	Date: 16 MAR 06
Drawn by:	File * E-56-14-19
Checked by:	Rev.

U.S. ARMY ENGINEER DISTRICT, SEATTLE
CORPS OF ENGINEERS
SEATTLE, WASHINGTON
Prepared by:

ADDITIONAL WATER STORAGE PROJECT
HOWARD HANSON DAM
GREEN RIVER WASHINGTON

WET WELL/FISH WELL PLAN AT EL 1061.5

Plate number:
S-035
Sheet of

DESIGN FILE: P:\AECDesigns\HHAWS\Structural\HHAWS_ts-036.DGN
DATE AND TIME PLOTTED: 8/6/2008 11:50:53 AM

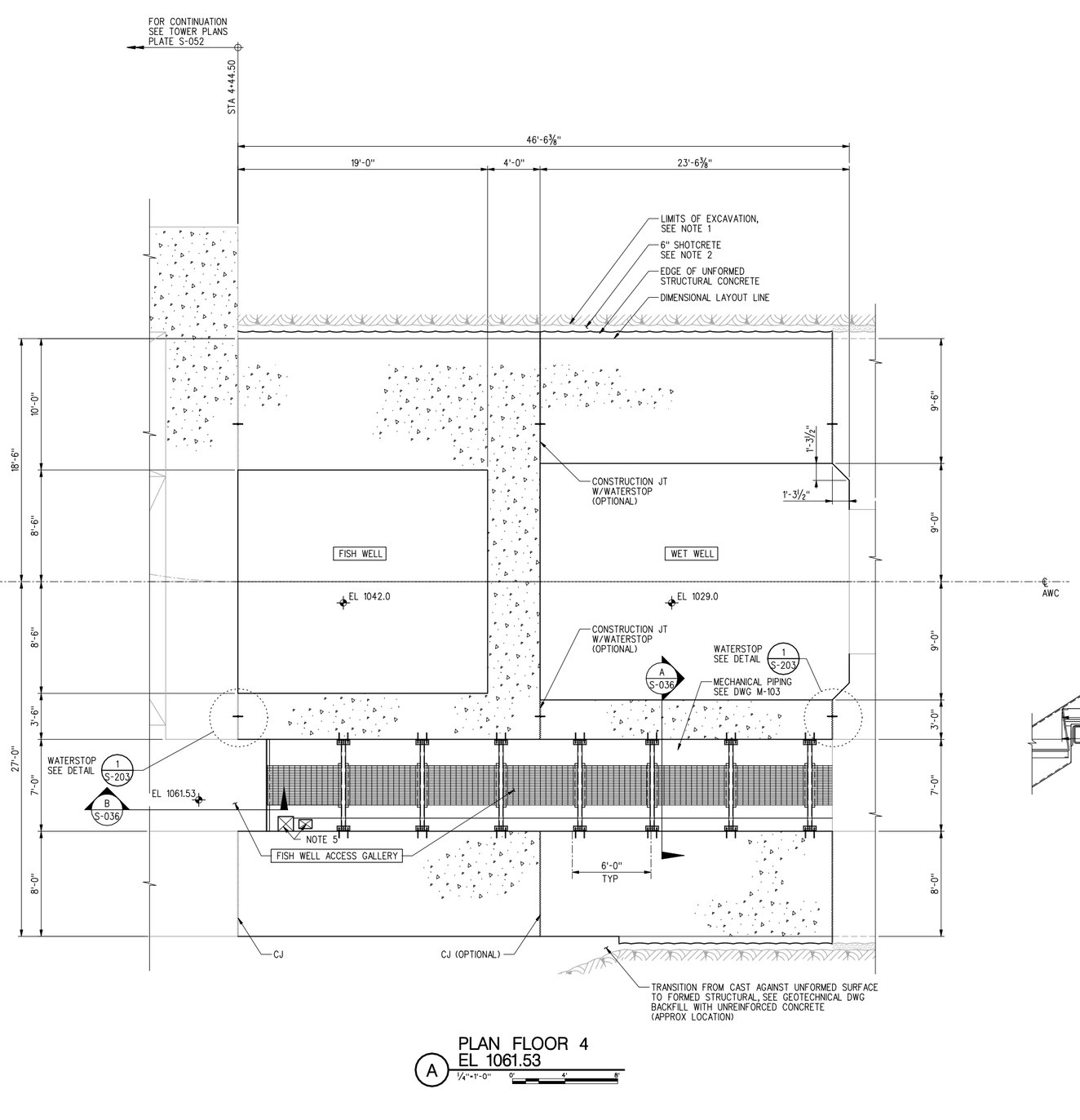

A PLAN FLOOR 4
EL 1061.53
1/4"=1'-0" 0" 4' 8'

NOTES:

1. CONCRETE DIMENSIONS SHOWN ARE CONSISTENT WITH STRUCTURAL DESIGN REQUIREMENTS. ACTUAL GEOMETRY AND WALL THICKNESS MAY VARY WHEN CAST AGAINST UNFORMED EDGE OF EXCAVATION.
2. GEOTECHNICAL ROCK ANCHORS ARE NOT SHOWN. SEE PHASE II, EXCAVATION AND TUNNELING FOR SHOTCRETE AND ROCK SUPPORT DETAIL REQUIREMENTS.
3. FOR REINFORCING, SEE PLATE NO. S-0xx
4. FLOOR •3 DOES NOT EXIST.
5. COORDINATE SIZE AND LOCATION OF OPENINGS WITH MECH DWGS.

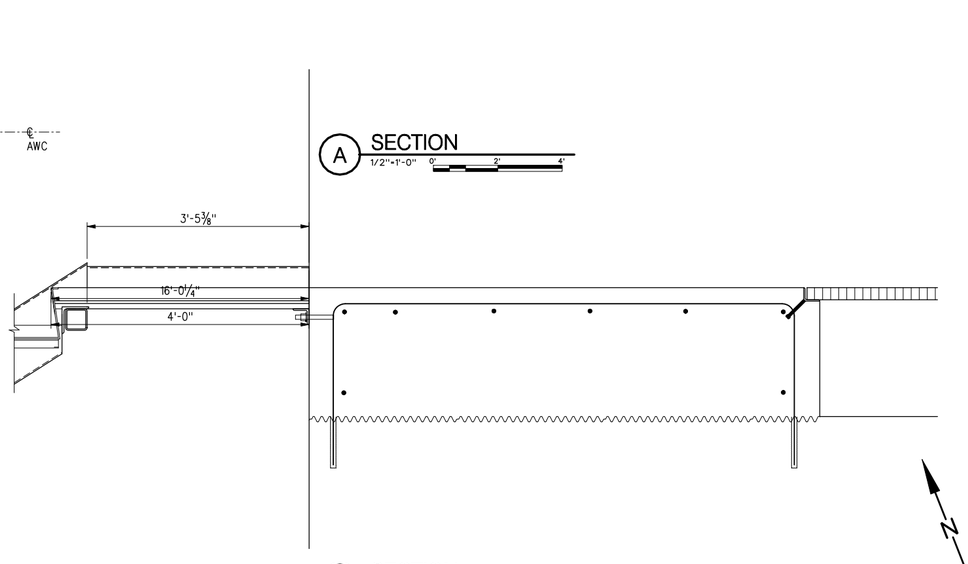

A SECTION
1/2"=1'-0" 0" 2' 4'

B SECTION
1/2"=1'-0" 0" 2' 4'

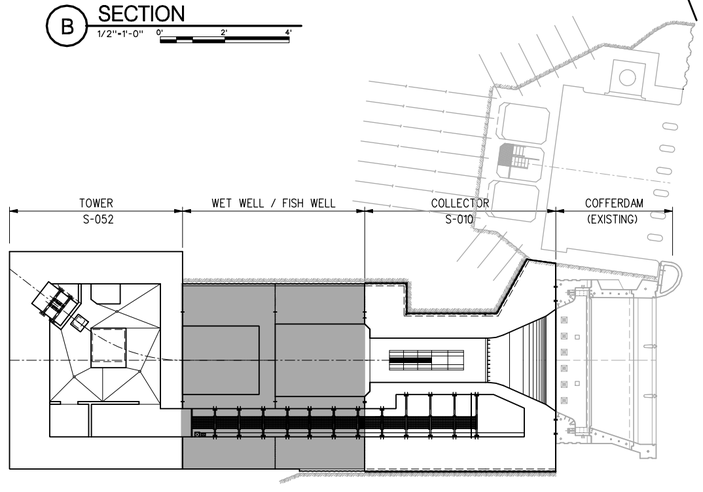

KEY PLAN

US Army Corps of Engineers
Seattle District

Symbol	Description
Symbol	Appr.
/ /	Date
Symbol	Description

Date: 16 MAR 06
File • E-56-14-19
Rev.
Designed by:
Drawn by:
Checked by:

U.S.ARMY ENGINEER DISTRICT,SEATTLE
CORPS OF ENGINEERS
SEATTLE, WASHINGTON
Prepared by:

ADDITIONAL WATER STORAGE PROJECT
HOWARD HANSON DAM
WET WELL/FISH WELL
PLAN @ EL 1061.53
GREEN RIVER WASHINGTON

Plate number:
S-036
Sheet of

DESIGN FILE: F:\AECDesigns\HHAW\Structural\HHAWS_ts-036.DGN
DATE AND TIME PLOTTED: 8/6/2008 11:50:56 AM

NOTES:

1. SEE PLATES S-035, S-040 AND S-041 FOR MORE REINFORCING INFO.

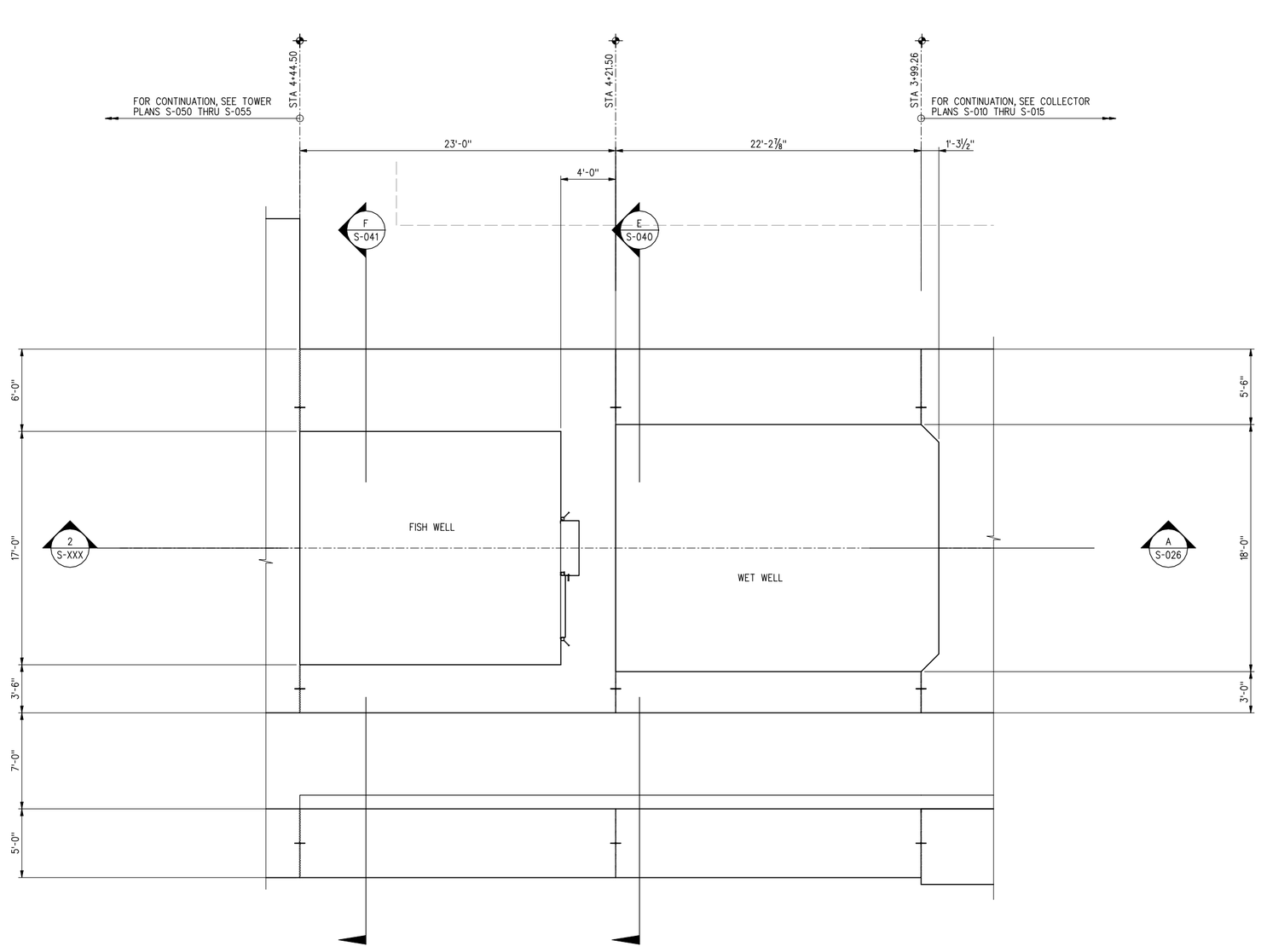

PLAN EL 1096.1 (EL 1118.1 SIMILAR)

1/4"=1'-0" 0' 4' 8'

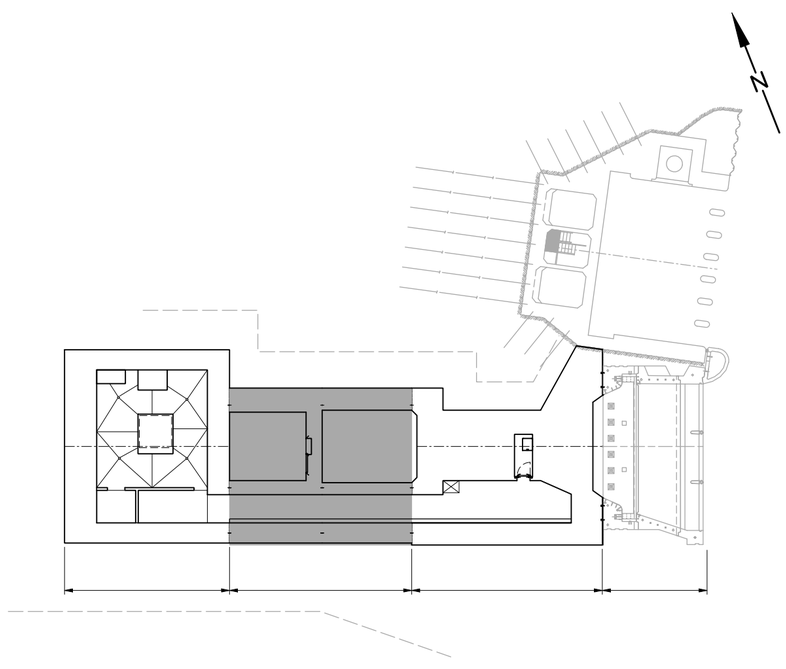

KEY PLAN

US Army Corps of Engineers
Seattle District

Symbol	Description	Date	Appr.	Symbol	Description
		/ /			

Designed by:
Drawn by:
Checked by:
Date: 16 MAR 06
File # E-56-14-19
Rev.

U.S. ARMY ENGINEER DISTRICT, SEATTLE
CORPS OF ENGINEERS
SEATTLE, WASHINGTON
Prepared by:

ADDITIONAL WATER STORAGE PROJECT
HOWARD HANSON DAM
WET WELL/FISH WELL
PLAN @ EL 1096.1
GREEN RIVER WASHINGTON

Plate number:
S-037
Sheet of

DATE AND TIME PLOTTED: 8/6/2008 11:51:09 AM DESIGN FILE: I:\AECDesigns\HHAW\Structural\HHAWS-1s-037.DGN

NOTES:

1. FOR REINFORCING SEE PLATE S-020.

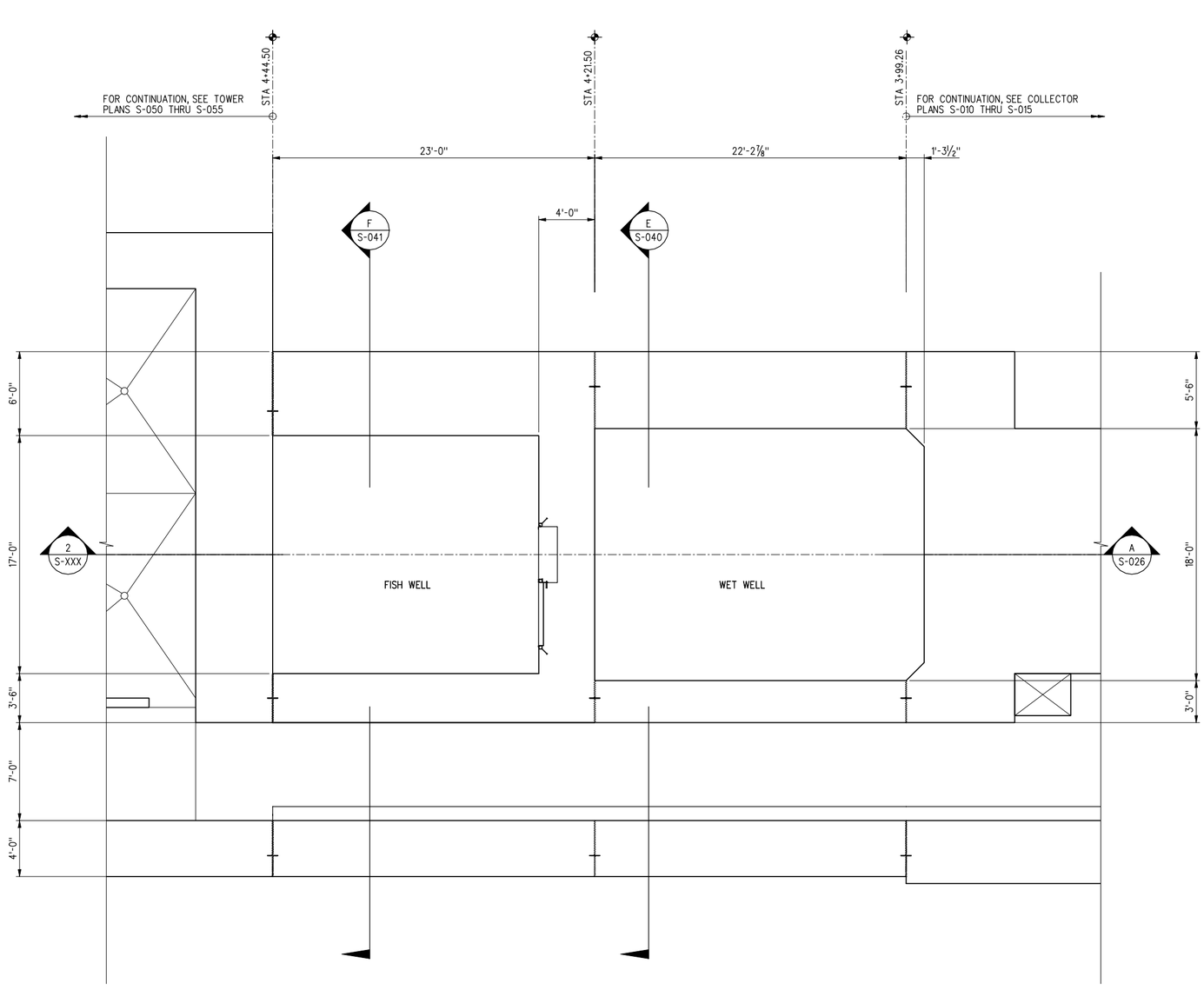

X PLAN EL 1140
1/4"=1'-0" 0" 4' 8'

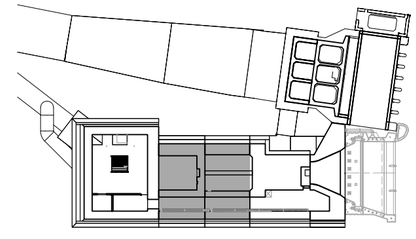

KEY PLAN

US Army Corps of Engineers
Seattle District

Symbol	Description	Appr.	Date
			/ /

Designed by:	Date: 16 MAR 06
Drawn by:	File # E-56-14-19
Checked by:	Rev.
Prepared by:	

U.S.ARMY ENGINEER DISTRICT,SEATTLE
CORPS OF ENGINEERS
SEATTLE, WASHINGTON

ADDITIONAL WATER STORAGE PROJECT
HOWARD HANSON DAM

WET WELL/FISH WELL PLAN @ EL 1140.0

GREEN RIVER WASHINGTON

Plate number: S-038
Sheet of

DESIGN FILE: P:\AEC\Designs\HHAW\Structural\HHAWS-1s-038.dgn
DATE AND TIME PLOTTED: 8/6/2008 11:51:29 AM

NOTES:

1. FOR REINFORCING SEE PLATE S-020.

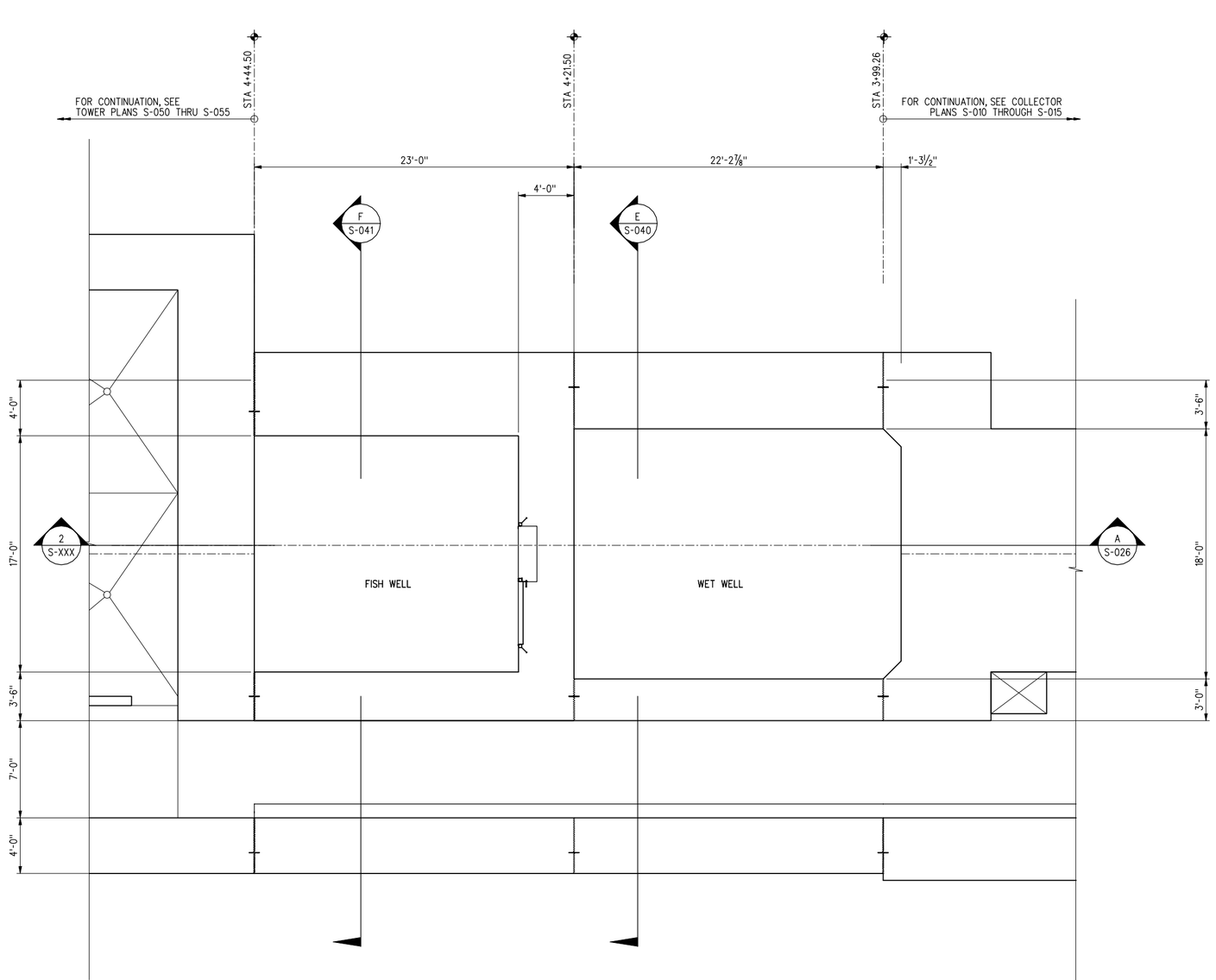

X PLAN EL 1163.4
1/4"=1'-0" 0' 4' 8'

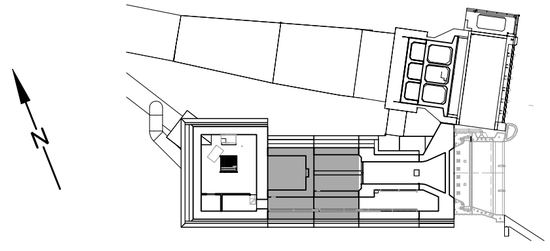

KEY PLAN

US Army Corps of Engineers
Seattle District

Symbol	Description	Appr.	Date
			/ /

Designed by:	Date: 16 MAR 06
Drawn by:	File # E-56-14-19
Checked by:	Rev.
Prepared by:	

U.S.ARMY ENGINEER DISTRICT,SEATTLE
CORPS OF ENGINEERS
SEATTLE, WASHINGTON

ADDITIONAL WATER STORAGE PROJECT
HOWARD HANSON DAM

WET WELL/FISH WELL PLAN @ EL 1163.4

GREEN RIVER WASHINGTON

Plate number:
S-039
Sheet of

DESIGN FILE: P:\AEC\Designs\HHAW\Structural\HHAWS-ts-039.dgn
DATE AND TIME PLOTTED: 8/6/2008 11:51:51 AM

NOTES:

1. SEE S-034 FOR CURVE DATA.
2. SEE S-001 AND S-002 FOR REINFORCING NOTES.

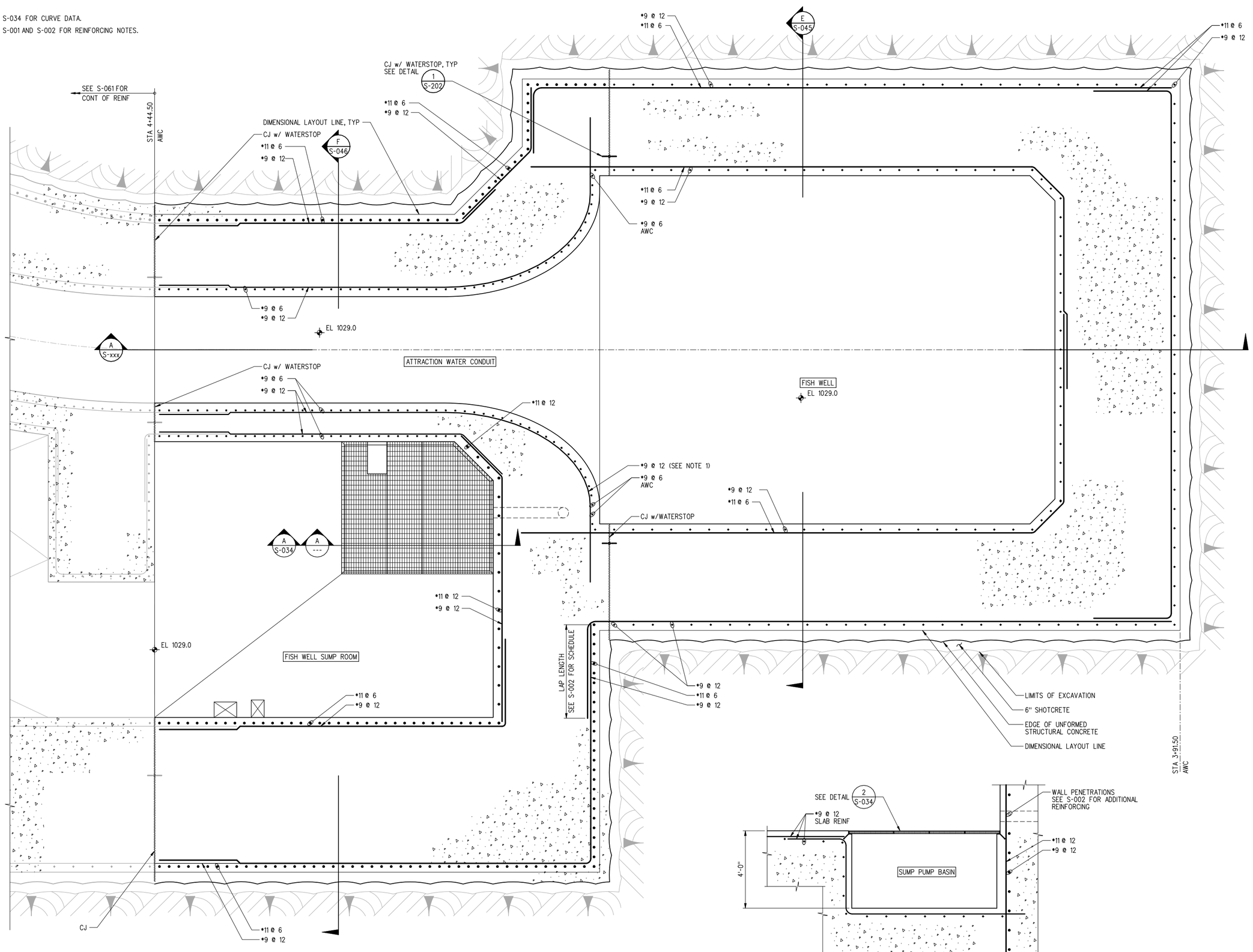

WET WELL /FISH WELL REINFORCING @ AWC
1/2"=1'-0"

A SECTION
1/2"=1'-0"

US Army Corps of Engineers
Seattle District

Symbol	Description
Appr.	
Date	

Designed by:
Drawn by:
Checked by:
Prepared by:

U.S.ARMY ENGINEER DISTRICT,SEATTLE
CORPS OF ENGINEERS
SEATTLE, WASHINGTON

Date: 16 MAR 06
File #: E-56-14-19
Rev.:

ADDITIONAL WATER STORAGE PROJECT
HOWARD HANSON DAM
GREEN RIVER WASHINGTON

WET WELL - FISH WELL REINFORCING @ AWC

Plate number: S-040
Sheet of

DESIGN FILE: P:\AECDesigns\HH&W\Structural\HH&WS_ts-040.DGN
DATE AND TIME PLOTTED: 8/6/2008 11:52:10 AM

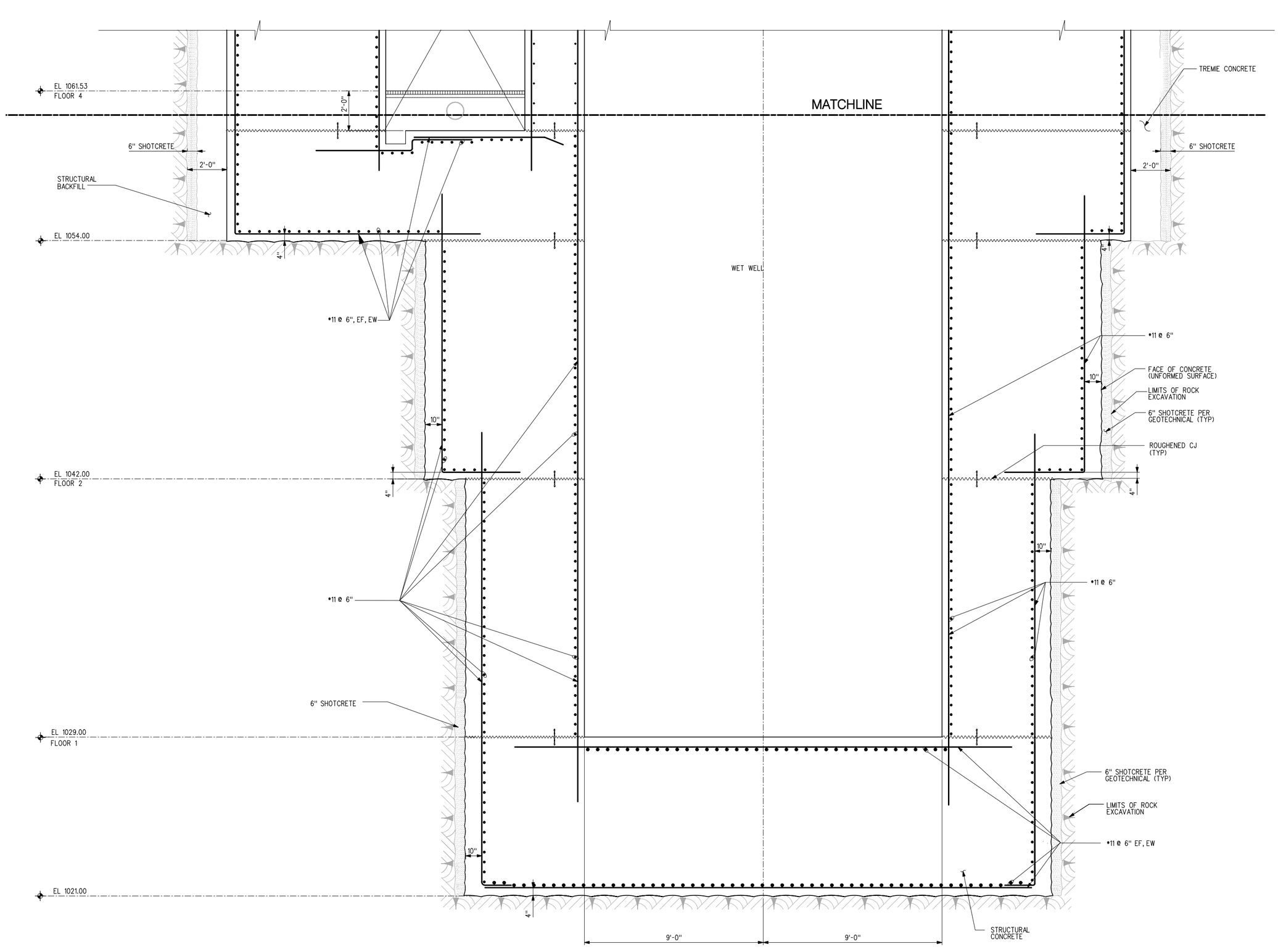

A SECTION @ STA 4 + 11.00 – REINF – I
1/2"=1'-0"

US Army Corps of Engineers
Seattle District

Symbol	Description	Appr.	Date
			/ /

Designed by:	X
Drawn by:	X
Checked by:	X
Date:	16 MAR 06
File #	E-56-14-19
Rev.	

U.S.ARMY ENGINEER DISTRICT,SEATTLE
CORPS OF ENGINEERS
SEATTLE, WASHINGTON
Prepared by:

ADDITIONAL WATER STORAGE PROJECT
HOWARD HANSON DAM
GREEN RIVER WASHINGTON

WET WELL SECTION @ STA 4+11.00 REINF - I

Plate number:
S-044
Sheet of

P:\AECDesigns\HHAW\Structural\HHAWS_ts-044.DGN
DESIGN FILE:
11:52:28 AM
DATE AND TIME PLOTTED: 8/6/2008

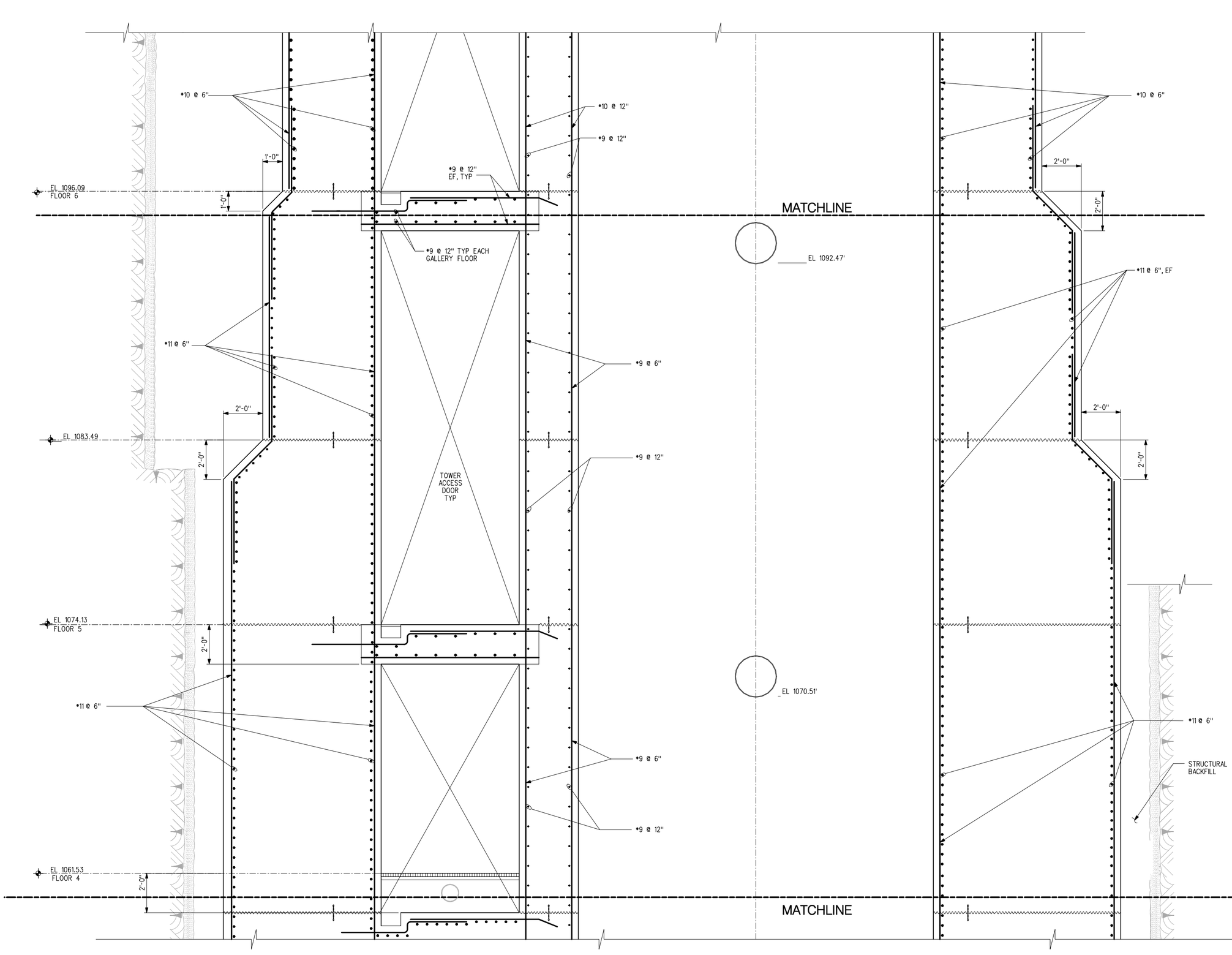

A SECTION @ STA 4 + 11.00 REINF – II
1/2"=1'-0"
0" 2" 4"

US Army Corps of Engineers
Seattle District

Symbol	Description
Appr.	
Date	/ /

Designed by: X
Drawn by: X
Checked by: X
Date: 16 MAR 06
File # E-56-14-19
Rev.

U.S.ARMY ENGINEER DISTRICT,SEATTLE
CORPS OF ENGINEERS
SEATTLE, WASHINGTON
Prepared by:

ADDITIONAL WATER STORAGE PROJECT
HOWARD HANSON DAM
GREEN RIVER WASHINGTON

WET WELL SECTION @ STA 4+11.0 REINF- II

Plate number: S-045
Sheet of

DATE AND TIME PLOTTED: 8/6/2008 11:52:50 AM
DESIGN FILE: F:\AECDesigns\HHAW\Structural\HHAWS-1s-045.DGN

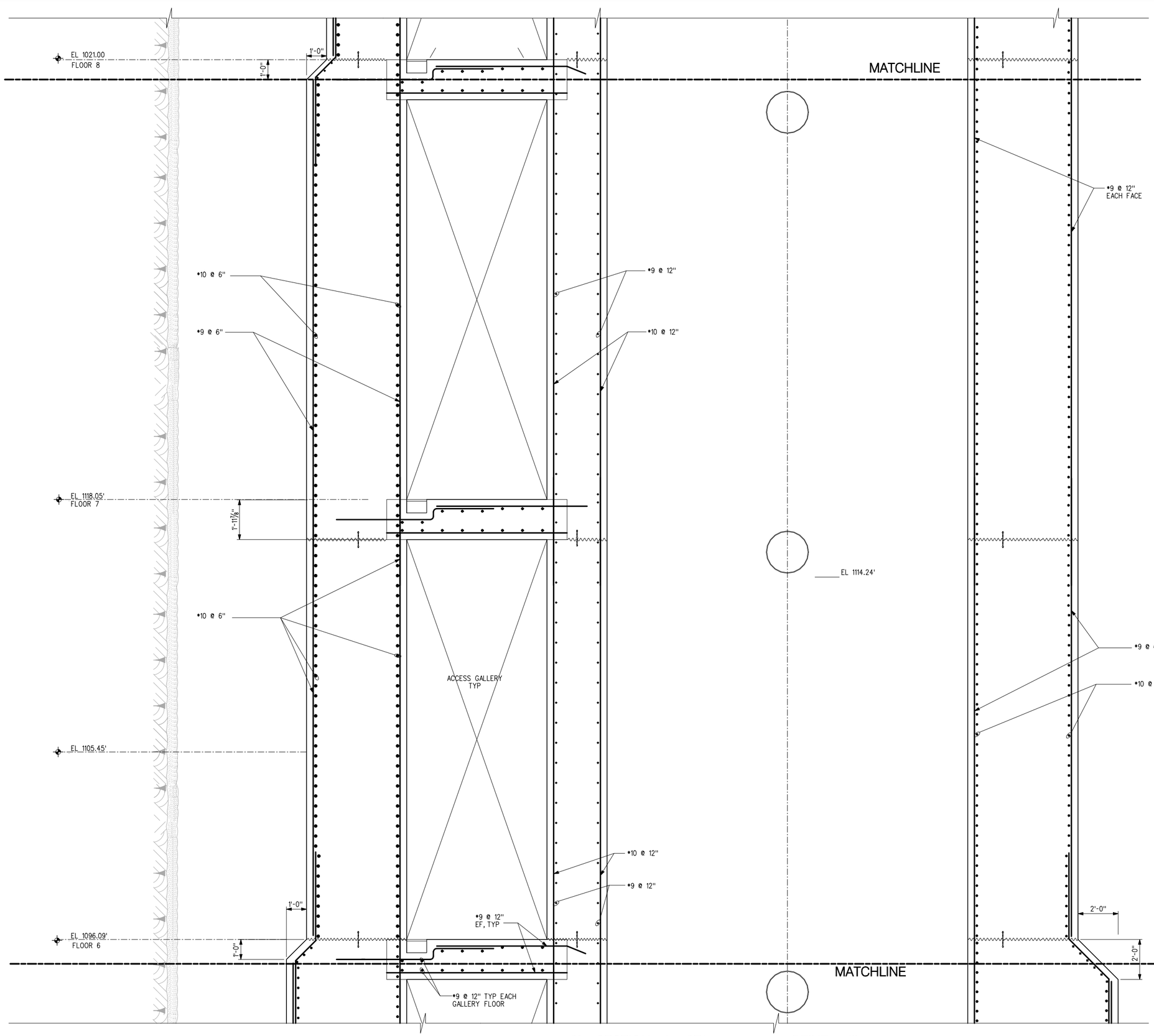

A SECTION @ STA 4 + 11.00 REINF – III
1/2"=1'-0"
0" 2" 4"

US Army Corps of Engineers
Seattle District

Symbol	Description	Appr.	Date
			/ /

Designed by: X		Date:	16 MAR 06
Drawn by: X		File #	E-56-14-19
Checked by: X		Rev.	

U.S.ARMY ENGINEER DISTRICT,SEATTLE
CORPS OF ENGINEERS
SEATTLE, WASHINGTON
Prepared by:

ADDITIONAL WATER STORAGE PROJECT
HOWARD HANSON DAM
GREEN RIVER WASHINGTON

WET WELL SECTION @ STA 4+11.0 REINF - III

Plate number:
S-046
Sheet of

DESIGN FILE: J:\AEC\Designs\HHAW\Structural\HHAWS-1s-046.DGN
DATE AND TIME PLOTTED: 8/6/2008 11:53:12 AM

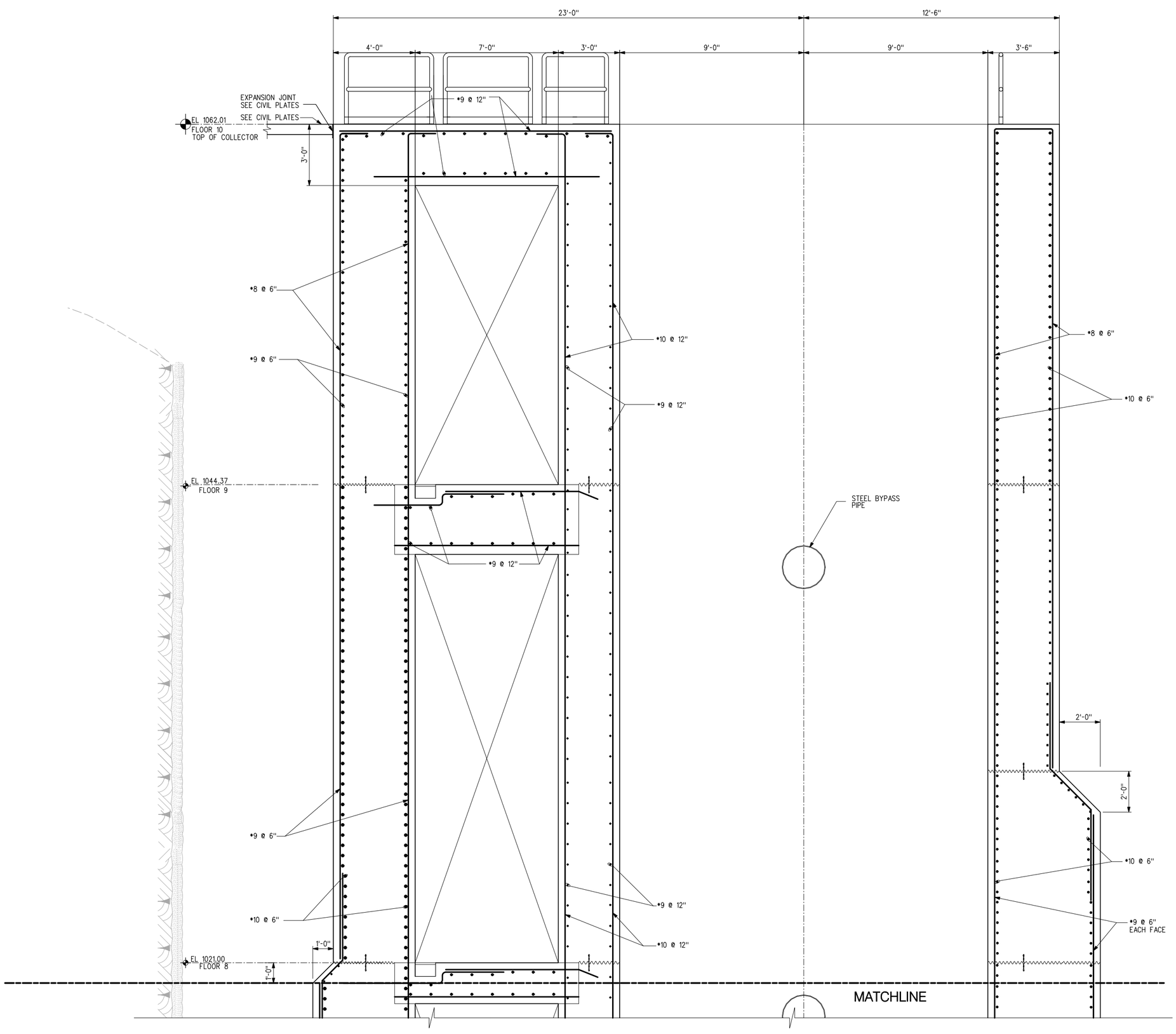

A SECTION @ STA 4 + 11.00 REINF – IV

0" 2" 4"

US Army Corps of Engineers
Seattle District

Symbol	Description	Appr.	Date
			/ /

Designed by:	X
Drawn by:	X
Checked by:	X
Prepared by:	
Date:	16 MAR 06
File #	E-56-14-19
Rev.	

U.S.ARMY ENGINEER DISTRICT,SEATTLE
CORPS OF ENGINEERS
SEATTLE, WASHINGTON

ADDITIONAL WATER STORAGE PROJECT
HOWARD HANSON DAM
GREEN RIVER WASHINGTON

WET WELL SECTION @ STA 4+11.0 REINF - IV

Plate number:
S-047
Sheet of

I:\AEC\Designs\HHAW\Structural\HHAWS-1s-047.DGN
DESIGN FILE:
11:53:31 AM
DATE AND TIME PLOTTED: 8/6/2008

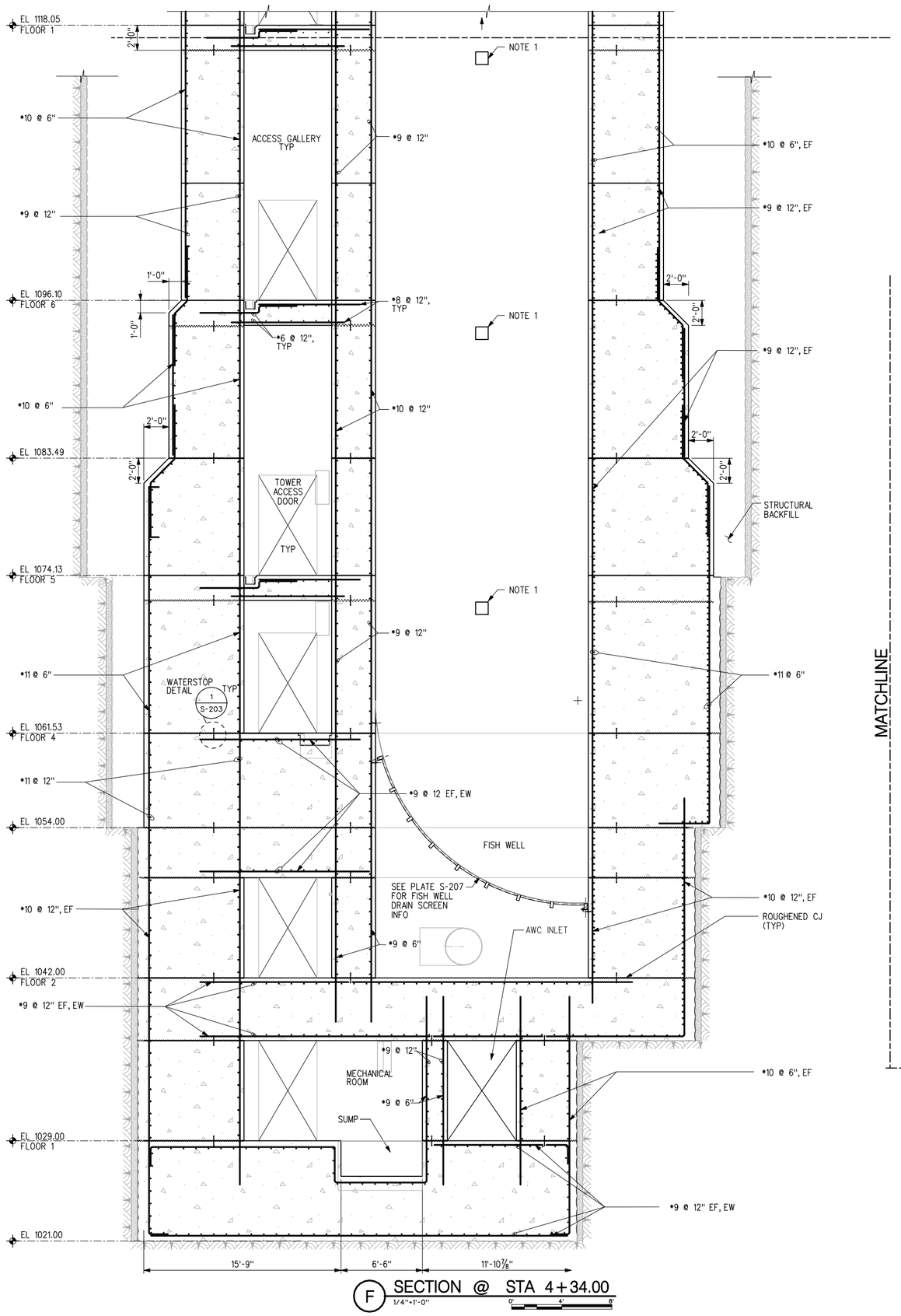

F SECTION @ STA 4+34.00
1/4"=1'-0"

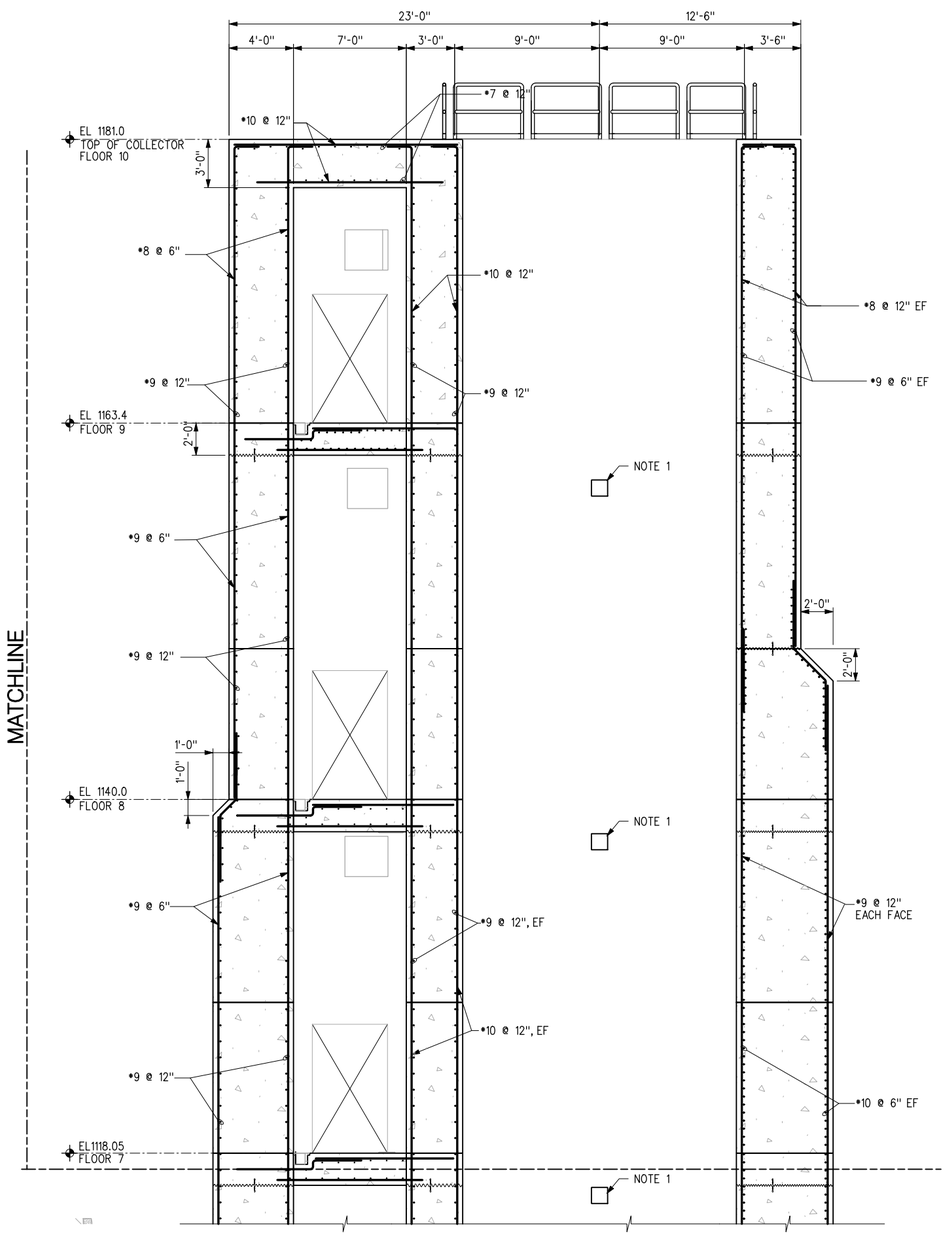

NOTES:

1. FISH WELL WALL BLOCKOUT FOR HYDROACOUSTIC TRANSDUCER TO BE ALIGNED WITH FISH BYPASS PIPE. CONTRACTOR TO COORDINATE SIZE OF BLOCKOUT WITH HYDROACOUSTICS SUPPLIER.

US Army Corps of Engineers
Seattle District

Symbol	Description	Date	Appr.	Symbol	Description
		/ /			

U.S.ARMY ENGINEER DISTRICT,SEATTLE
CORPS OF ENGINEERS
SEATTLE, WASHINGTON

Prepared by:

Designed by: X
Drawn by: X
Checked by: X

Date: 16 MAR 06
File #: E-56-14-19
Rev.

ADDITIONAL WATER STORAGE PROJECT
HOWARD HANSON DAM
FISH WELL SECTION
@ STA 4+34.00
GREEN RIVER WASHINGTON

Plate number:
S-048
Sheet of

DATE AND TIME PLOTTED: 8/6/2008 11:53:52 AM DESIGN FILE: I:\AECDesigns\HHAW\Structural\HHAWS-1s-048.DGN

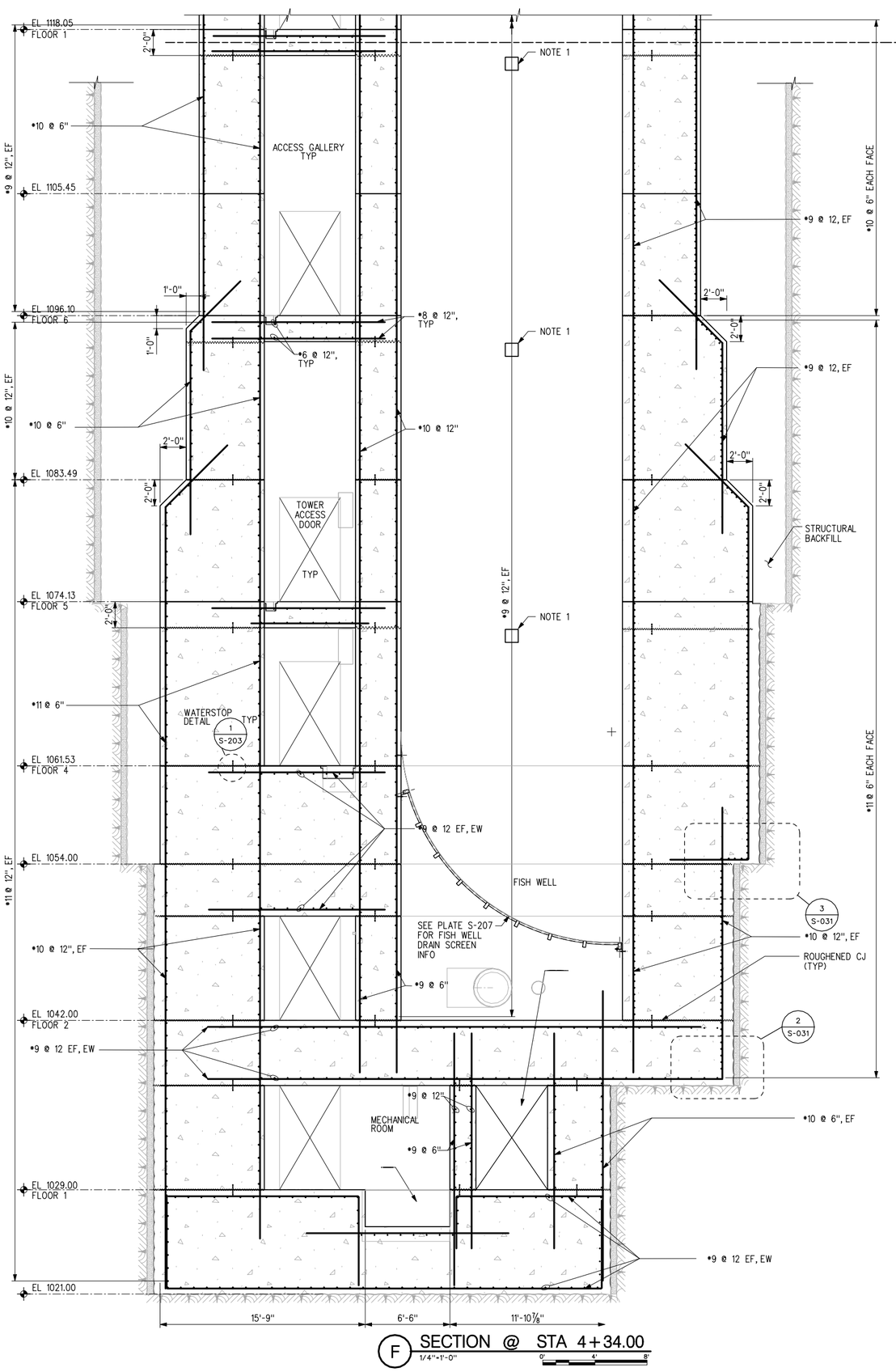

F SECTION @ STA 4+34.00
1/4"=1'-0"

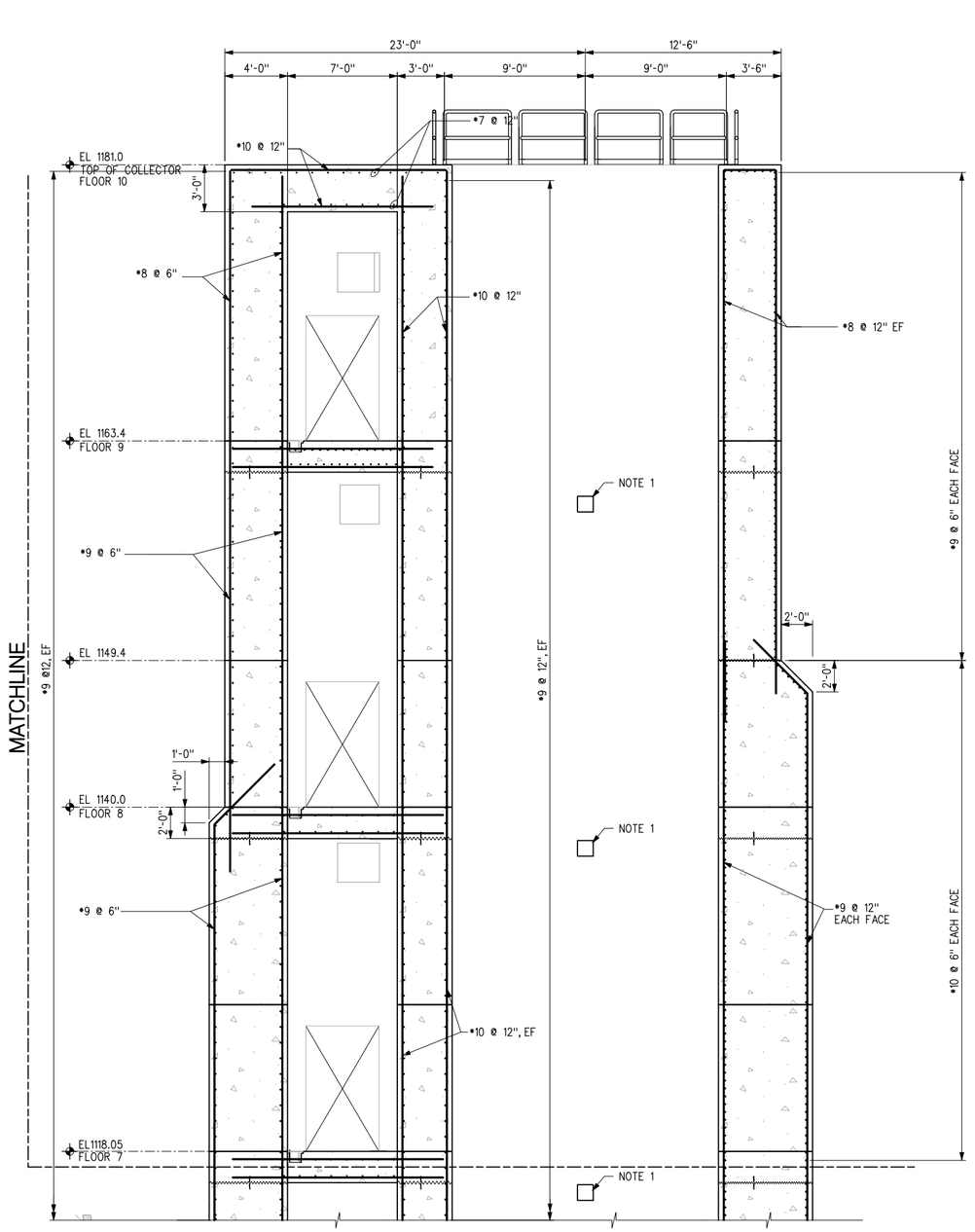

NOTES:

1. FISH WELL WALL BLOCKOUT FOR HYDROACOUSTIC TRANSDUCER TO BE ALIGNED WITH FISH BYPASS PIPE. CONTRACTOR TO COORDINATE SIZE OF BLOCKOUT WITH HYDROACOUSTICS SUPPLIER.

US Army Corps of Engineers
Seattle District

Symbol	Description	Appr.	Date
			/ /

U.S. ARMY ENGINEER DISTRICT, SEATTLE
CORPS OF ENGINEERS
SEATTLE, WASHINGTON

Prepared by:

Designed by: X
Drawn by: X
Checked by: X

Date: 16 MAR 06
File #: E-56-14-19
Rev.

ADDITIONAL WATER STORAGE PROJECT
HOWARD HANSON DAM

FISH WELL SECTION @ STA 4+34.00

GREEN RIVER WASHINGTON

Plate number:
S-048
Sheet of

J:\AEC\Designs\HHAW\Structural\HHAWS_ts-048B.DGN
DESIGN FILE: 11:54:07 AM
DATE AND TIME PLOTTED: 8/6/2008

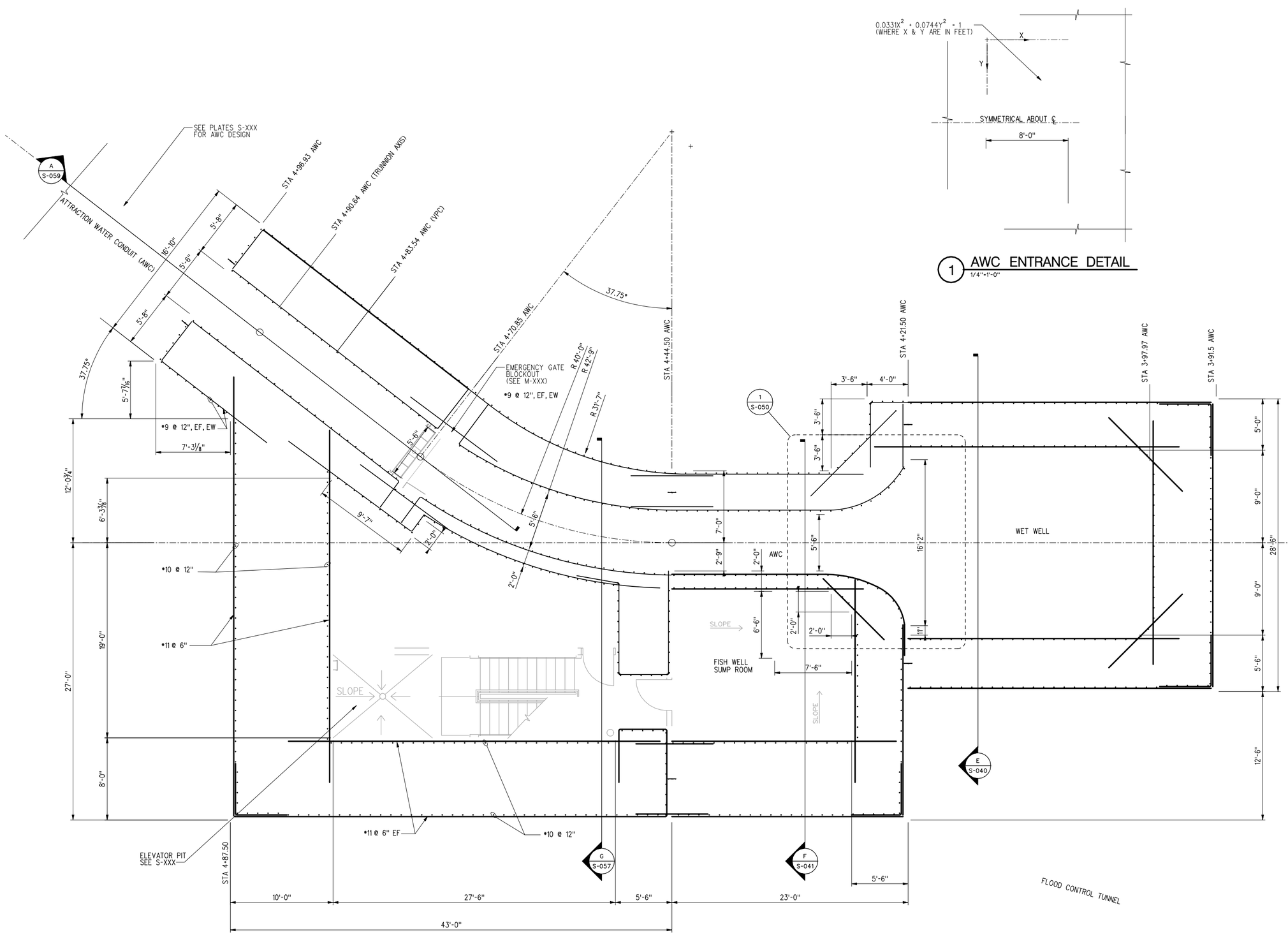

1 AWC ENTRANCE DETAIL
1/4"=1'-0"

PLAN EL 1029.0 – FLOOR #1
1/4"=1'-0"

NOTES:

1. THE CONCRETE OUTLINE SHOWN REPRESENTS THE MINIMUM DESIGN GEOMETRY. CONCRETE AT EL. 1029 SHALL BE CAST AGAINST ROCK AND WALL THICKNESSES WILL HAVE AN INCREASED RESULTING VALUE THAT WILL VARY 6-12 INCHES.

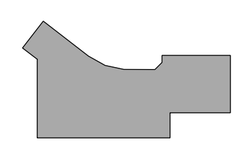

KEY PLAN

US Army Corps of Engineers
Seattle District

Symbol	Description	Appr.	Date
			/ /

Designed by:	Date:
X	16 MAR 06
Drawn by:	File #
X	E-56-14-19
Checked by:	Rev.
X	

U.S. ARMY ENGINEER DISTRICT, SEATTLE
CORPS OF ENGINEERS
SEATTLE, WASHINGTON
Prepared by:

ADDITIONAL WATER STORAGE PROJECT
HOWARD HANSON DAM
GREEN RIVER WASHINGTON

TOWER PLANS AT EL 1029.0

Plate number:
S-050
Sheet of

J:\AEC\Designs\HHAW\Structural\HHAWS-1s-050.DGN
DESIGN FILE: J:\AEC\Designs\HHAW\Structural\HHAWS-1s-050.DGN
DATE AND TIME PLOTTED: 8/6/2008 11:54:21 AM

NOTES:

1. CONCRETE DIMENSIONS SHOWN ARE CONSISTENT WITH STRUCTURAL DESIGN REQUIREMENTS. ACTUAL GEOMETRY AND WALL THICKNESS MAY VARY WHEN CAST AGAINST UNFORMED EDGE OF EXCAVATION.
2. GEOTECHNICAL ROCK ANCHORS ARE NOT SHOWN. SEE VOLUME I, EXCAVATION AND TUNNELING FOR SHOTCRETE AND ROCK SUPPORT DETAIL REQUIREMENTS.
3. FOR REINFORCING, SEE PLATE NO. S-061
4. SEE ARCHITECTURAL DRAWINGS FOR STAIR DETAILS.
5. ELLIPTICAL CURVE VARIES FROM 4'-3" UPSTREAM TO 5'-8".

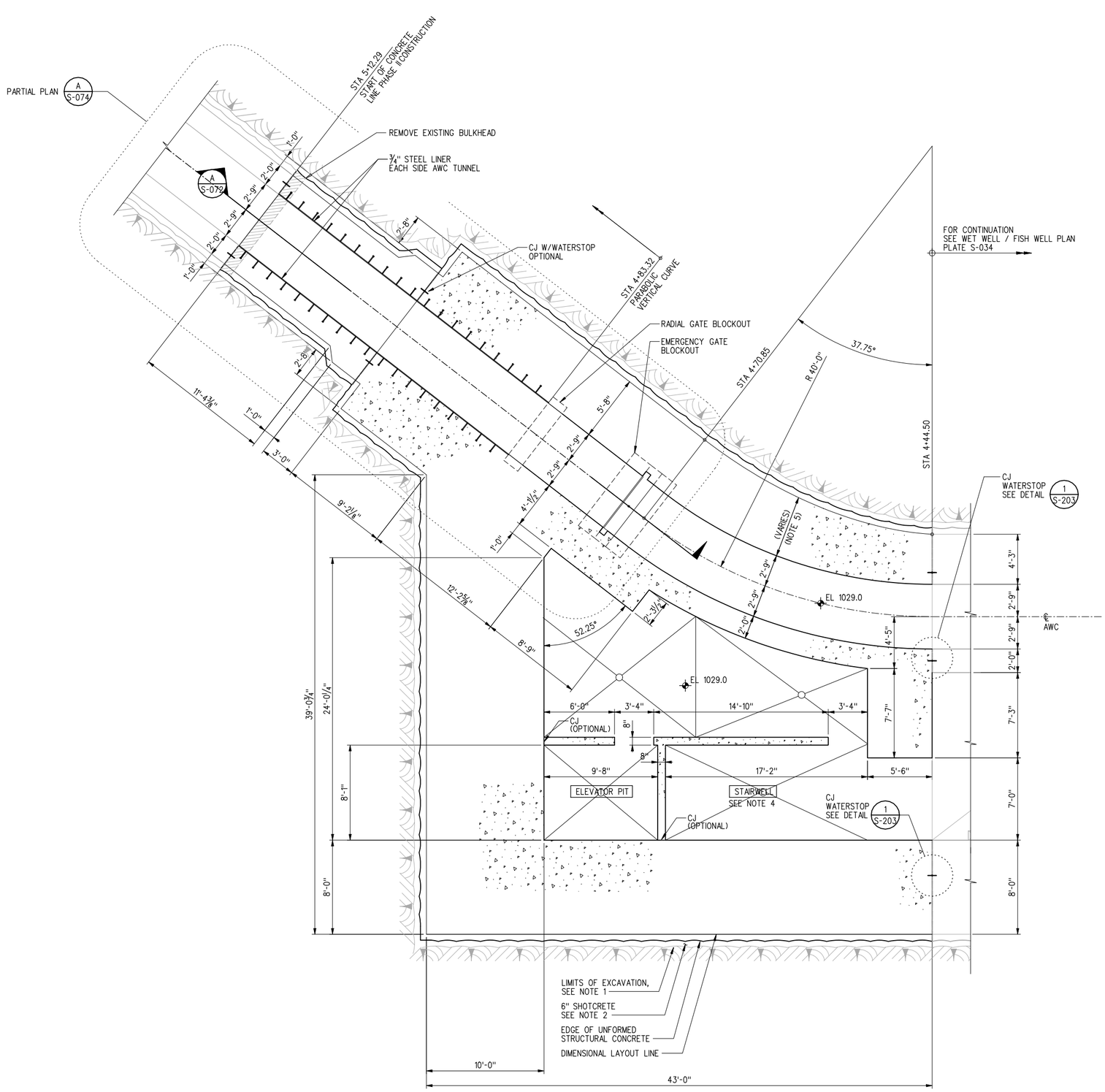

A TOWER PLAN @ EL 1029.0
¼"=1'-0" 0' 4' 8'

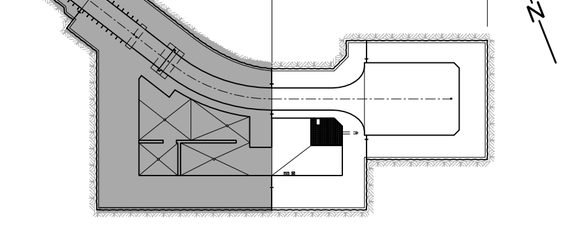

KEY PLAN

US Army Corps of Engineers
Seattle District

Symbol	Description	Date
Appr.		

U.S.ARMY ENGINEER DISTRICT,SEATTLE
CORPS OF ENGINEERS
SEATTLE, WASHINGTON

Designed by: X
Drawn by: X
Checked by: X
Prepared by:

Date: 16 MAR 06
File #
Rev. E-56-14-19

ADDITIONAL WATER STORAGE PROJECT
HOWARD HANSON DAM
TOWER PLAN EL 1029.0
GREEN RIVER WASHINGTON

Plate number: S-050
Sheet of

DATE AND TIME PLOTTED: 8/6/2008 11:54:23 AM
DESIGN FILE: I:\AECDesigns\HHAW\Structural\HHAWS-1s-050.DGN

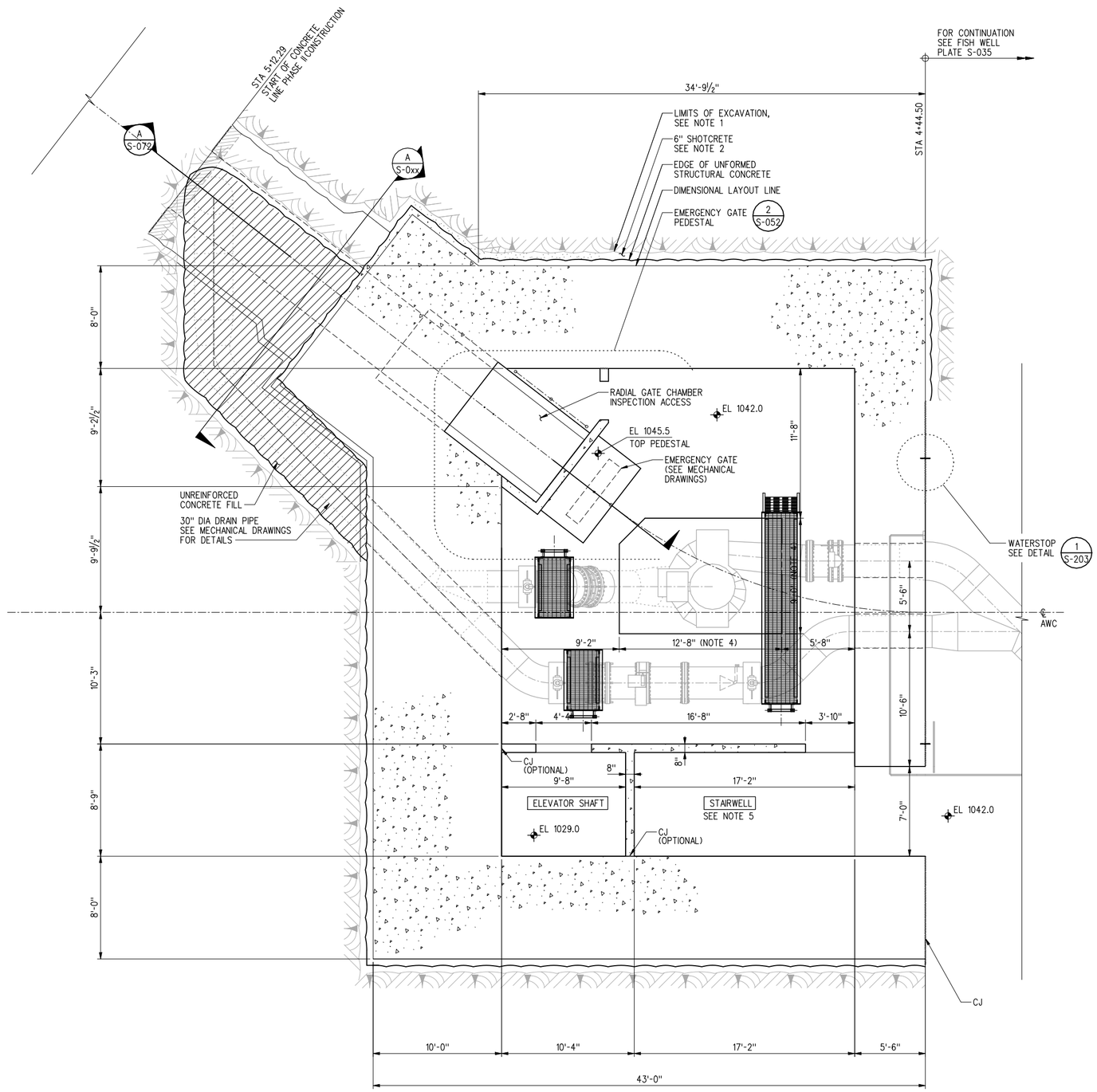

PLAN FLOOR 2
EL 1042

A ¼"=1'-0"

NOTES:

1. CONCRETE DIMENSIONS SHOWN ARE CONSISTENT WITH STRUCTURAL DESIGN REQUIREMENTS. ACTUAL GEOMETRY AND WALL THICKNESS MAY VARY WHEN CAST AGAINST UNFORMED EDGE OF EXCAVATION.
2. GEOTECHNICAL ROCK ANCHORS ARE NOT SHOWN. SEE PHASE II, EXCAVATION AND TUNNELING FOR SHOTCRETE AND ROCK SUPPORT DETAIL REQUIREMENTS.
3. FOR REINFORCING, SEE PLATE NO. S-0xx
4. COORDINATE WITH GATE MANUFACTURER FOR FINAL STRUCTURAL BLOCKOUT DIMENSIONS. DIMENSIONS SHOWN ARE FOR APPROXIMATE STRUCTURAL LAYOUT. SEE MECHANICAL DRAWINGS FOR ADDITIONAL INFORMATION.
5. SEE ARCHITECTURAL DRAWINGS FOR STAIR DETAILS.

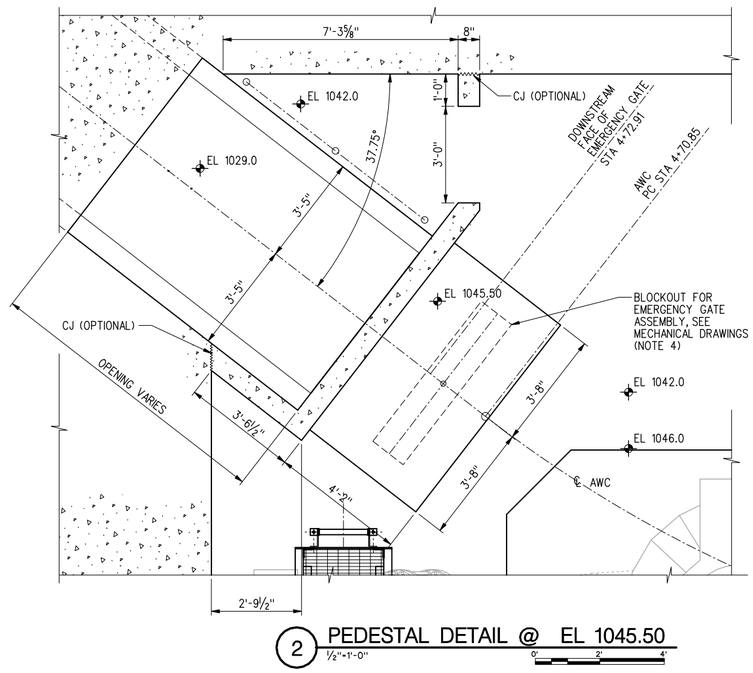

2 PEDESTAL DETAIL @ EL 1045.50

½"=1'-0"

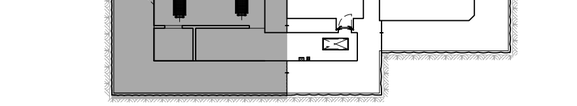

KEY PLAN

US Army Corps of Engineers
Seattle District

Symbol	Date	Appr.	Description
	/ /		

Date: 16 MAR 06
File #
E-56-14-19
Rev.

Designed by: X
Drawn by: X
Checked by: X

U.S. ARMY ENGINEER DISTRICT, SEATTLE
CORPS OF ENGINEERS
SEATTLE, WASHINGTON
Prepared by:

ADDITIONAL WATER STORAGE PROJECT
HOWARD HANSON DAM
GREEN RIVER WASHINGTON

TOWER PLAN @ EL 1042.0

Plate number:
S-051
Sheet of

I:\AECDesigns\HHAWS\Structural\HHAWS_ts-051.DGN
DATE AND TIME PLOTTED: 8/6/2008 11:54:33 AM
DESIGN FILE:

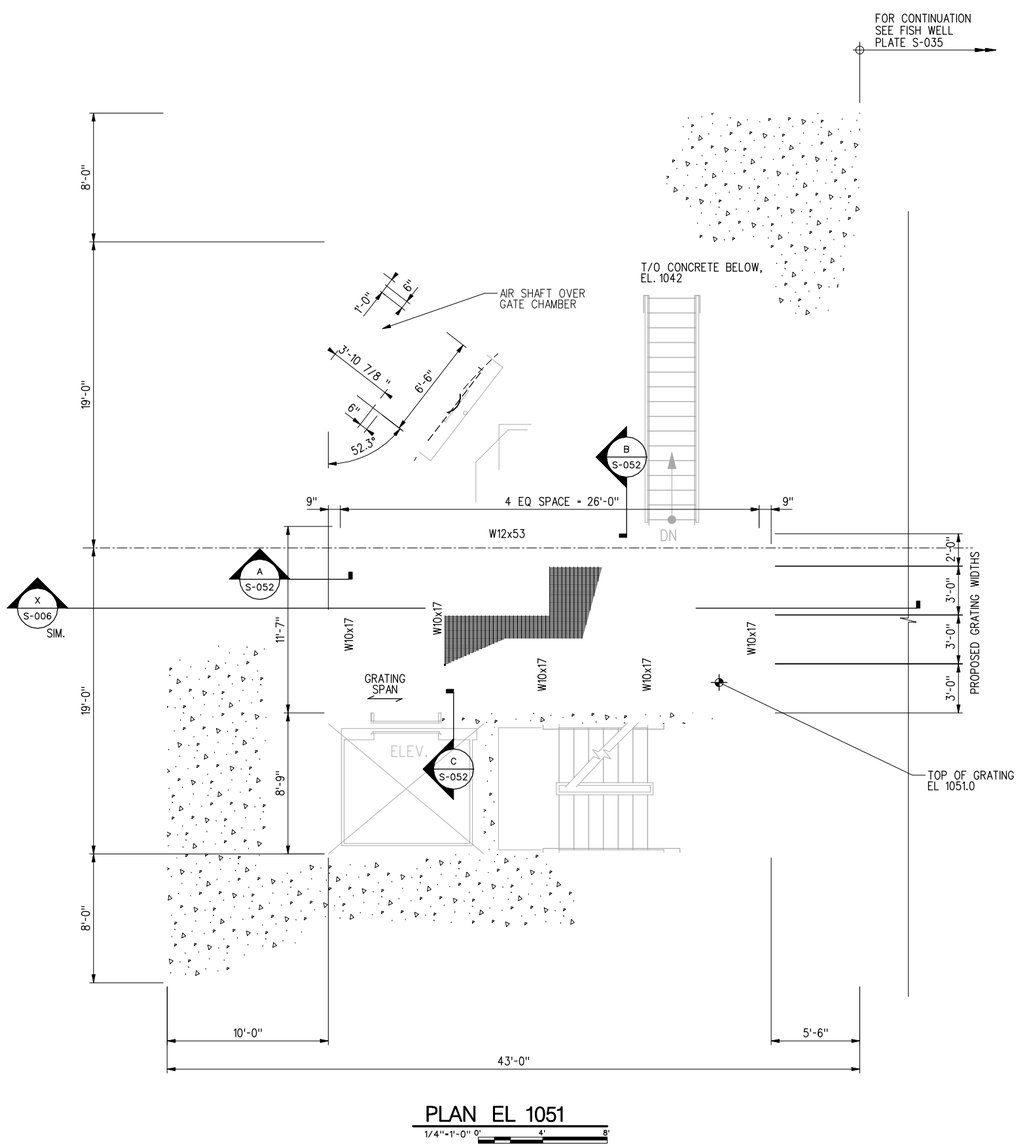

PLAN EL 1051

1/4"=1'-0" 0' 4' 8'

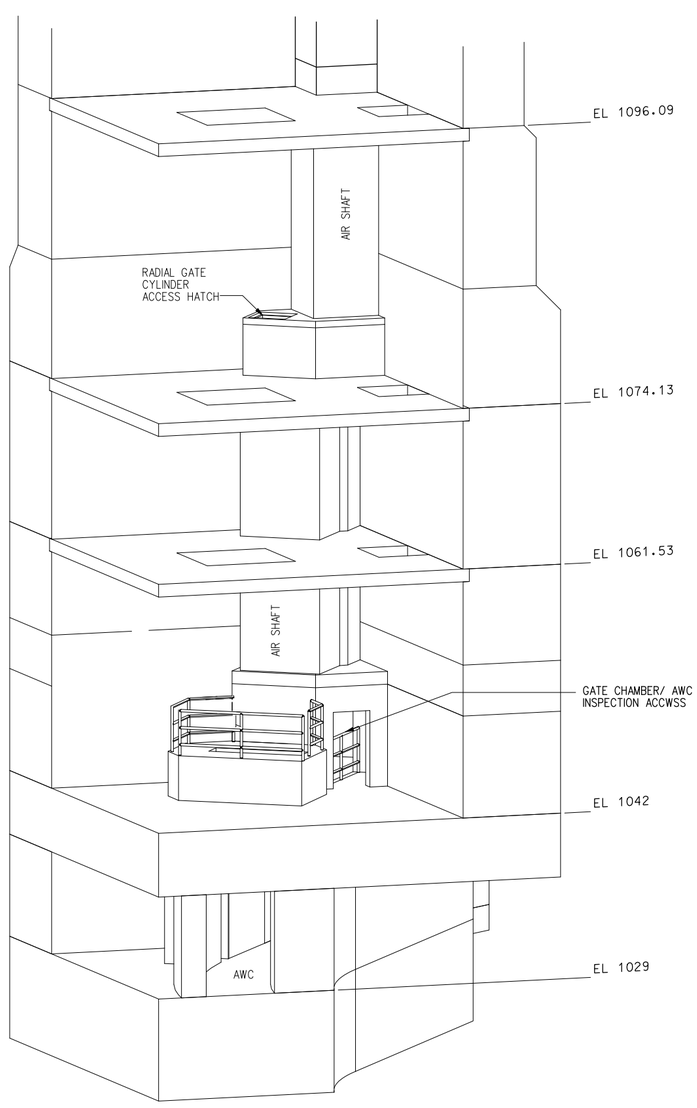

1 TOWER INTERIOR ISOMETRIC

NOT TO SCALE

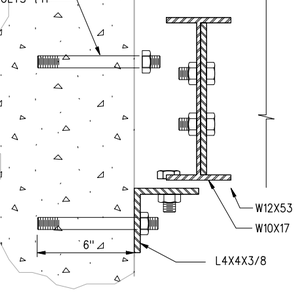

A SECTION

3"=1'-0"

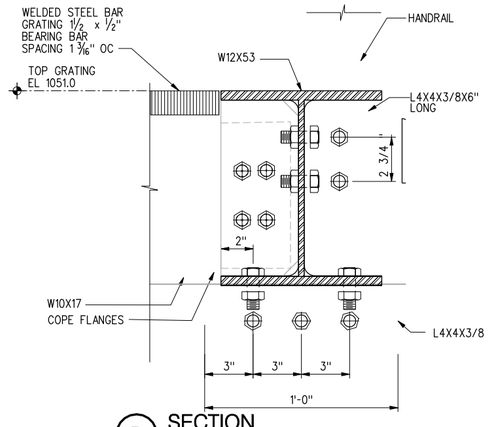

B SECTION

3"=1'-0"

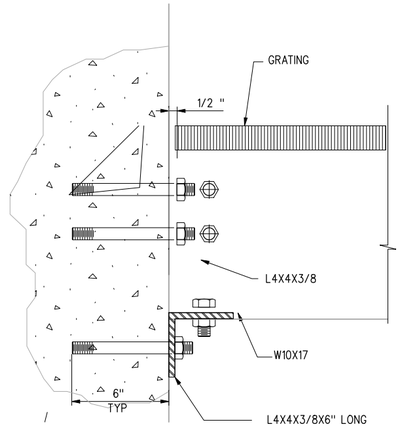

C SECTION

3"=1'-0"

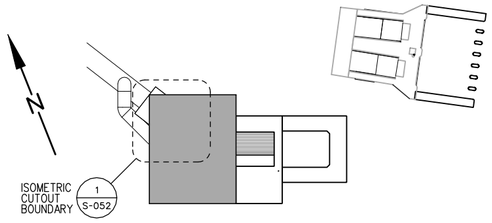

KEY PLAN

US Army Corps of Engineers
Seattle District

Symbol	Description	Appr.	Date
			/ /

Designed by: X
Drawn by: X
Checked by: X
Date: 16 MAR 06
File #
E-56-14-19
Rev.

U.S.ARMY ENGINEER DISTRICT,SEATTLE
CORPS OF ENGINEERS
SEATTLE, WASHINGTON
Prepared by:

ADDITIONAL WATER STORAGE PROJECT
HOWARD HANSON DAM
TOWER PLANS @
EL 1051.0
GREEN RIVER WASHINGTON

Plate number:
S-052
Sheet of

DESIGN FILES: I:\AECDesigns\HHAW\Structural\HHAWS-ts-051.DGN
DATE AND TIME PLOTTED: 8/6/2008 11:54:45 AM

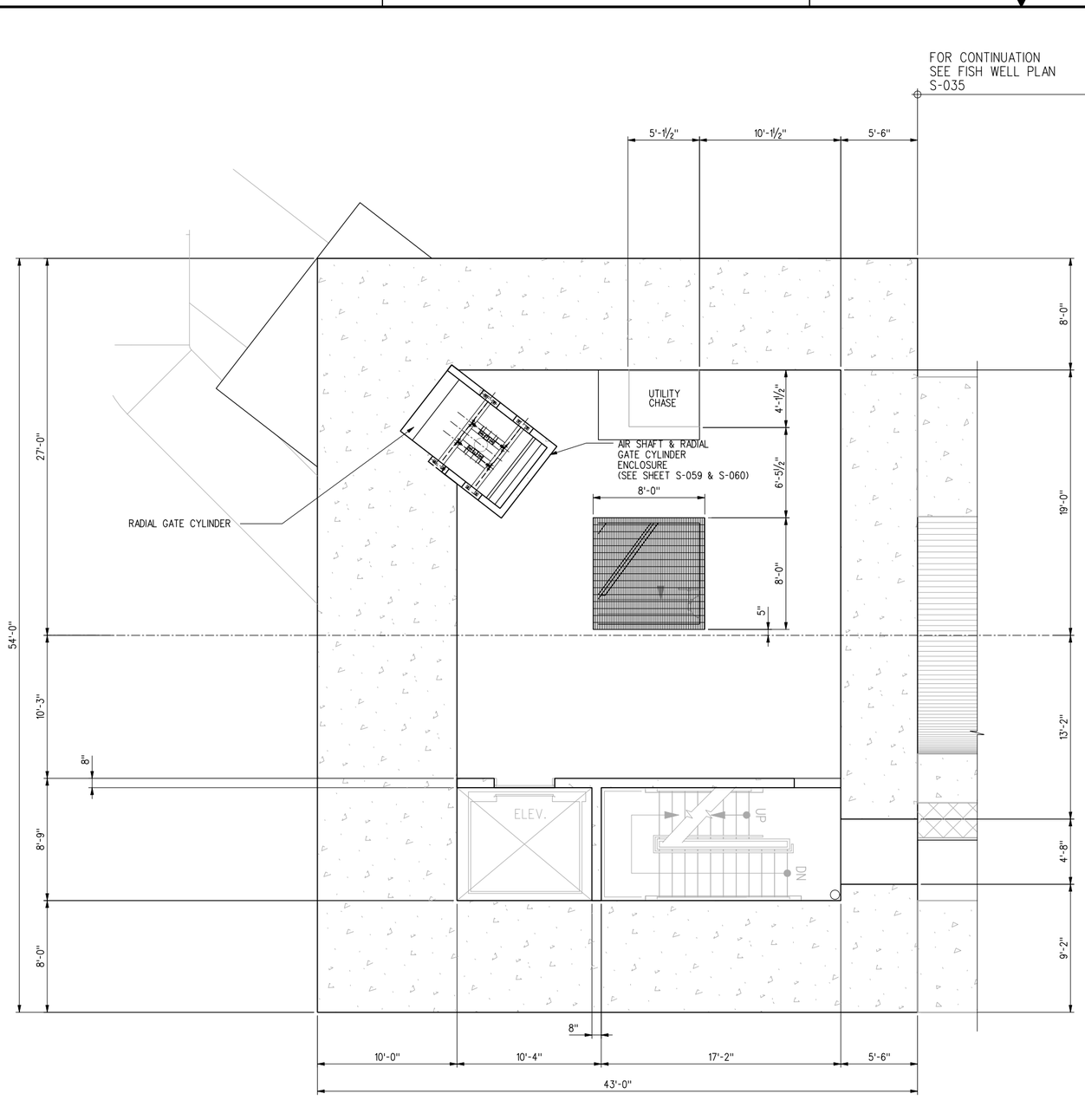

A PLAN EL 1061.5
1/4"=1'-0"

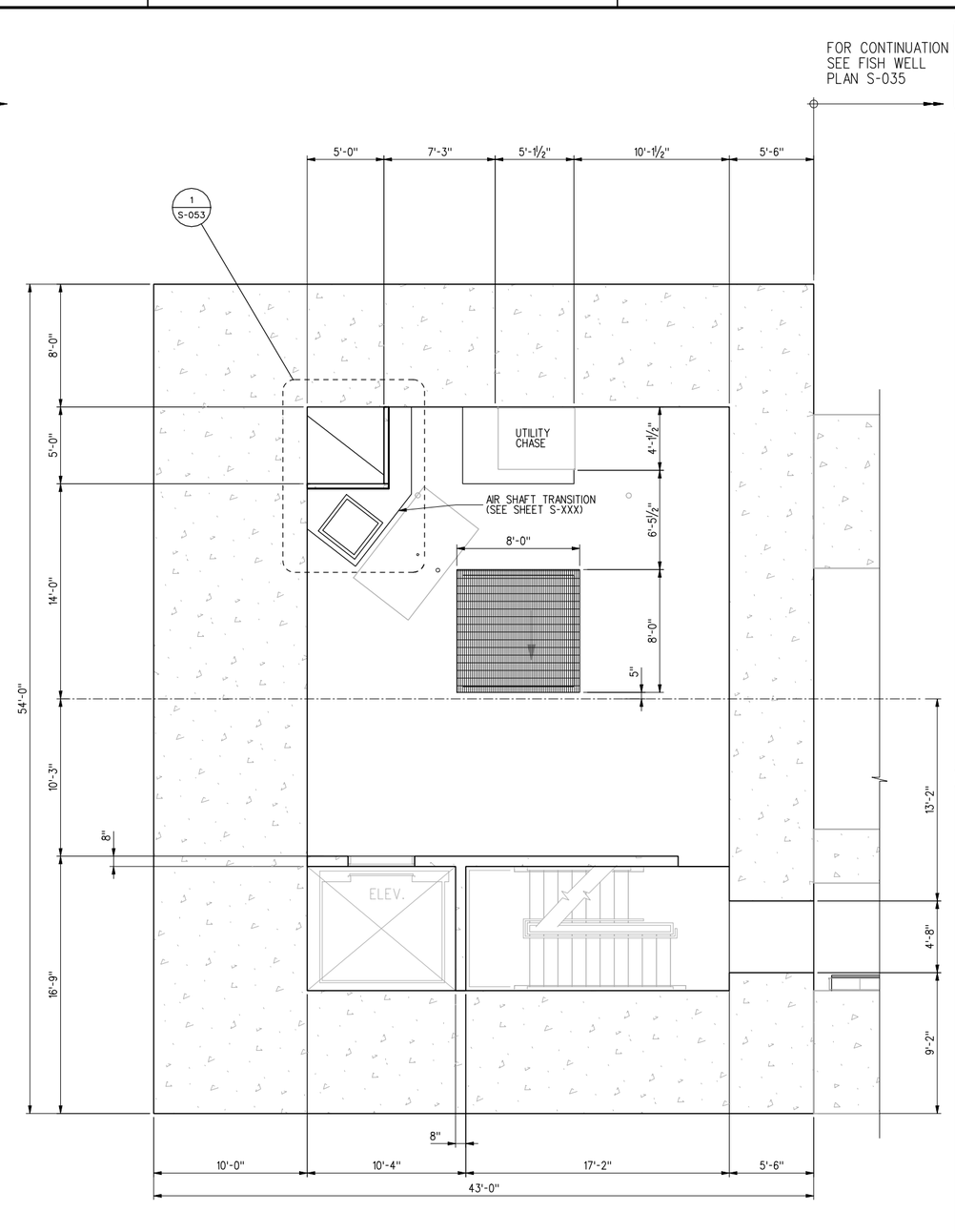

B PLAN EL 1074.13
1/4"=1'-0"

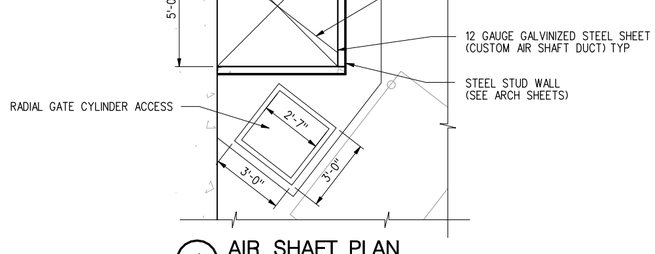

1 AIR SHAFT PLAN
1/2"=1'-0"

NOTES:

1. SEE SHEET S-070 FOR TYPICAL SLAB PENETRATION DETAILS FOR THE UTILITY CHASE AND TOWER GRATING

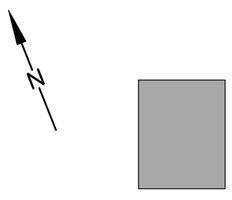

KEY PLAN

US Army Corps of Engineers
Seattle District

Symbol	Description
Appr.	
/ / Date	

Date: 16 MAR 06
File #: E-56-14-19
Rev.

Designed by: X
Drawn by: X
Checked by: X

U.S.ARMY ENGINEER DISTRICT,SEATTLE
CORPS OF ENGINEERS
SEATTLE, WASHINGTON
Prepared by:

ADDITIONAL WATER STORAGE PROJECT
HOWARD HANSON DAM
TOWER PLANS @
EL 1061.5 & 1074.13
GREEN RIVER WASHINGTON

Plate number:
S-053
Sheet of

DESIGN FILE: P:\AECDesigns\VHAW\Structural\VHAWS_ts-052.DGN
DATE AND TIME PLOTTED: 8/6/2008 11:54:57 AM

SHIPS LADDER S-206

MECHANICAL PIPING SEE MECH DRAWINGS FOR DETAILS

FOR CONTINUATION SEE FISH WELL PLATE S-035

STA 4+44.50

AIR SHAFT & RADIAL GATE CYLINDER ENCLOSURE (SEE SHEET S-059 & S-060)

43'-0"

8'-5" 7'-3" 10'-0" 5'-6"

8'-0" 27'-0" 19'-0" 10'-0"

5'-0" 6'-0" 8'-0" 1'-10"

UTILITY CHASE

1 S-052

10'-3" 8'-8¾"

2'-8" 4'-4" 17'-2" 3'-4"

8"

CJ (OPTIONAL)

9'-8" 17'-2"

ELEVATOR SHAFT

STAIRWELL SEE NOTE 3

19'-0" 12'-0" 7'-0" 8'-0"

CONSTRUCTION JOINT W/ROUGHENED SURFACE

10'-0" 27'-6" 5'-6"

43'-0"

A PLAN EL 1061.5

1/4"=1'-0" 0' 4' 8'

10'-0" 4'-6" 5'-9" 7'-3" 10'-0" 5'-6"

8'-0" 8'-5½" 10'-6½" 19'-0"

3'-10¼" 5'-0"

UTILITY CHASE

2 S-052

WATERSTOP SEE DETAIL 1 S-203

2'-8" 4'-4" 17'-2" 3'-4"

8"

CJ (OPTIONAL)

9'-8" 17'-2"

ELEVATOR SHAFT

STAIRWELL SEE NOTE 3

8'-0" 19'-0"

10'-0" 27'-6" 5'-6"

43'-0"

B PLAN EL 1074.13

1/4"=1'-0" 0' 4' 8'

NOTES:

1. SEE SHEET S-070 FOR TYPICAL SLAB PENETRATION DETAILS FOR THE UTILITY CHASE AND TOWER GRATING
2. FOR REINFORCING, SEE PLATE NO. S-0xx
3. SEE ARCHITECTURAL DRAWINGS FOR STAIR DETAILS.

9'-0½" RADIAL GATE CYLINDER ACCESS 8"

CJ

8" 3'-5" 3'-5" 8"

1'-0½" 3'-0¼" 1¾"

1'-7" 1'-7"

℄ AWC

AWC PC STA 4+70.85

1 PARTIAL PLAN

½"=1'-0" 0' 2' 4'

EL. 1074.13

EL. 1061.50

EL. 1029.0

℄ AWC

AWC PC STA 4+70.85

2 PARTIAL PLAN

½"=1'-0" 0' 2' 4'

KEY PLAN

US Army Corps of Engineers Seattle District

Symbol	Date	Appr.	Description
	/ /		
Symbol	Date		Description

Date: 16 MAR 06
File #: E-56-14-19
Rev.

Designed by: X
Drawn by: X
Checked by: X

U.S. ARMY ENGINEER DISTRICT, SEATTLE CORPS OF ENGINEERS SEATTLE, WASHINGTON

Prepared by:

ADDITIONAL WATER STORAGE PROJECT
HOWARD HANSON DAM
TOWER PLANS @ EL 1061.5 & 1074.13
GREEN RIVER WASHINGTON

Plate number: S-052
Sheet of

I:\AECDesigns\HHAW\Structural\HHAWS-1s-052.DGN

DESIGN FILE: 11-55-01 AM

DATE AND TIME PLOTTED: 8/6/2008

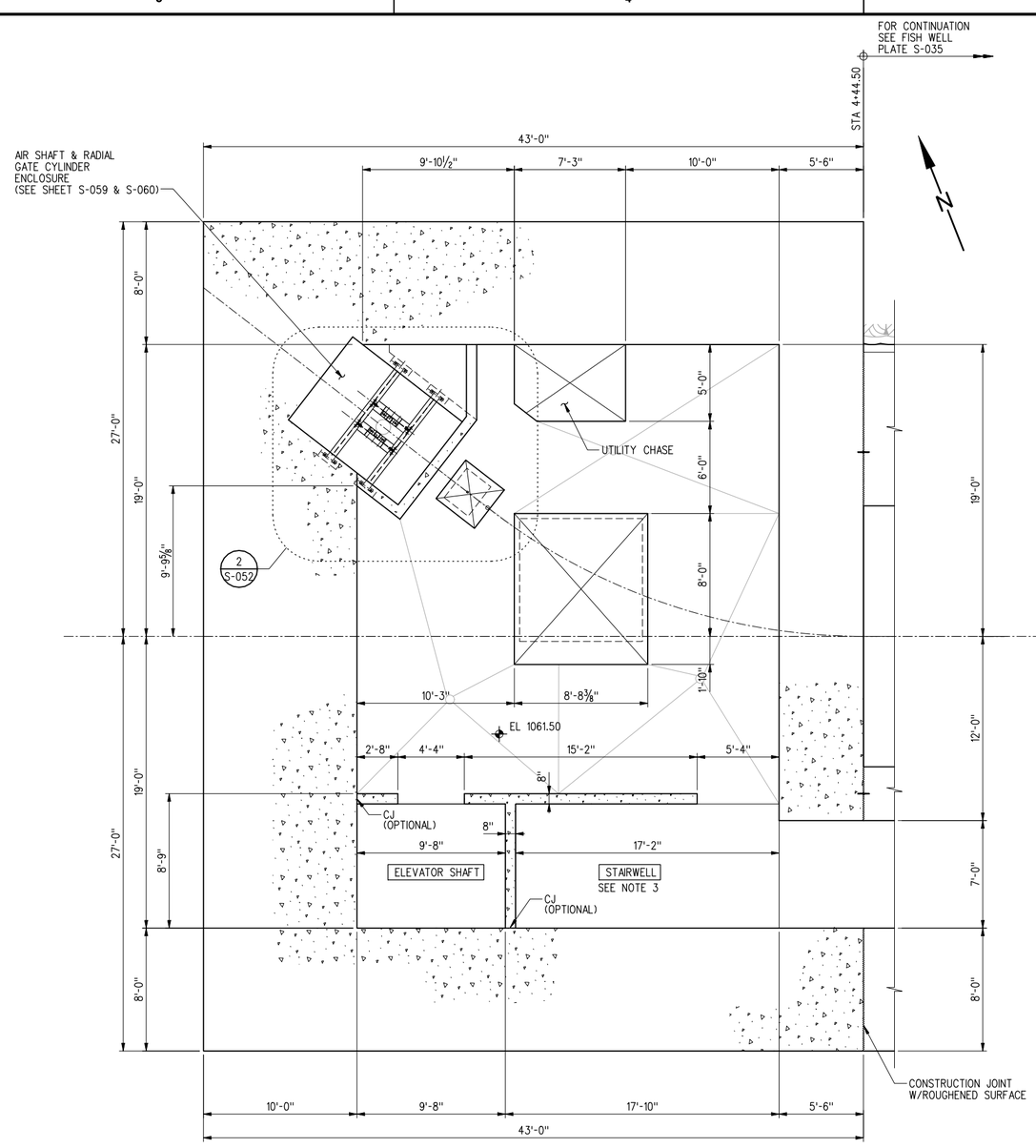

A PLAN FLOOR 4
EL 1061
¼"=1'-0" 0' 4' 8'

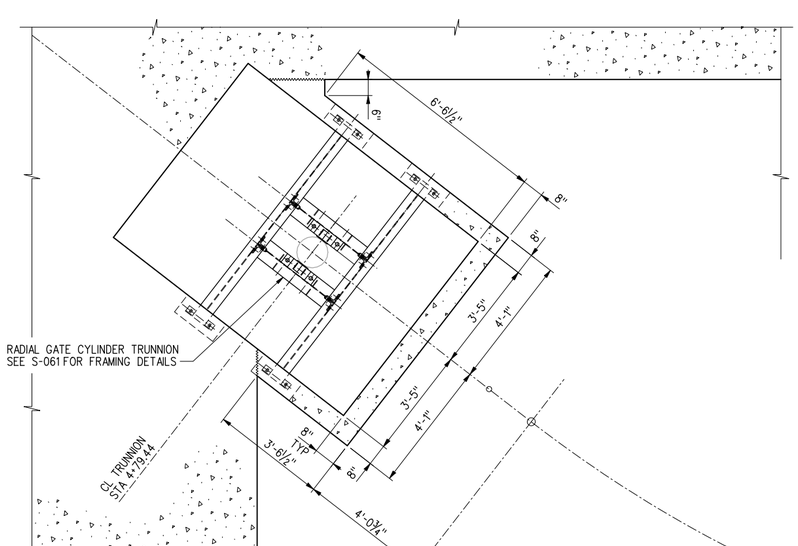

1 PARTIAL PLAN EL 1060
1/2"=1'-0" 0' 2' 4'

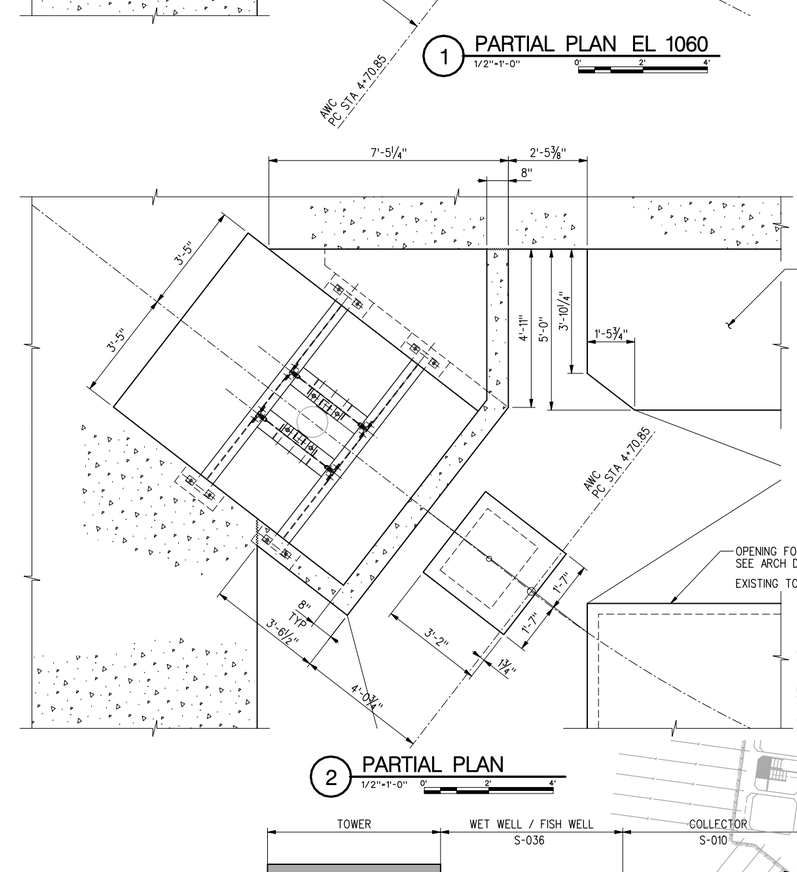

2 PARTIAL PLAN
1/2"=1'-0" 0' 2' 4'

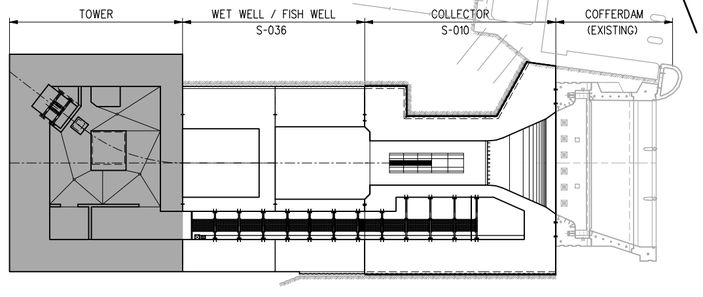

KEY PLAN

NOTES:

1. SEE SHEET S-070 FOR TYPICAL SLAB PENETRATION DETAILS FOR THE UTILITY CHASE AND TOWER GRATING
2. FOR REINFORCING, SEE PLATE NO. S-0xx
3. SEE ARCHITECTURAL DRAWINGS FOR STAIR DETAILS.

US Army Corps of Engineers
Seattle District

Symbol	Description	Appr.	Date
			/ /

Designed by: X
Drawn by: X
Checked by: X
Prepared by:

Date: 16 MAR 06
File # E-56-14-19
Rev.

U.S.ARMY ENGINEER DISTRICT,SEATTLE
CORPS OF ENGINEERS
SEATTLE, WASHINGTON

ADDITIONAL WATER STORAGE PROJECT
HOWARD HANSON DAM
TOWER PLAN
EL 1061.5
GREEN RIVER WASHINGTON

Plate number:
S-052
Sheet of

DATE AND TIME PLOTTED: 8/6/2008 11:55:03 AM
DESIGN FILE: F:\AECDesigns\HHAW\Structural\HHAWS_ts-052.DGN

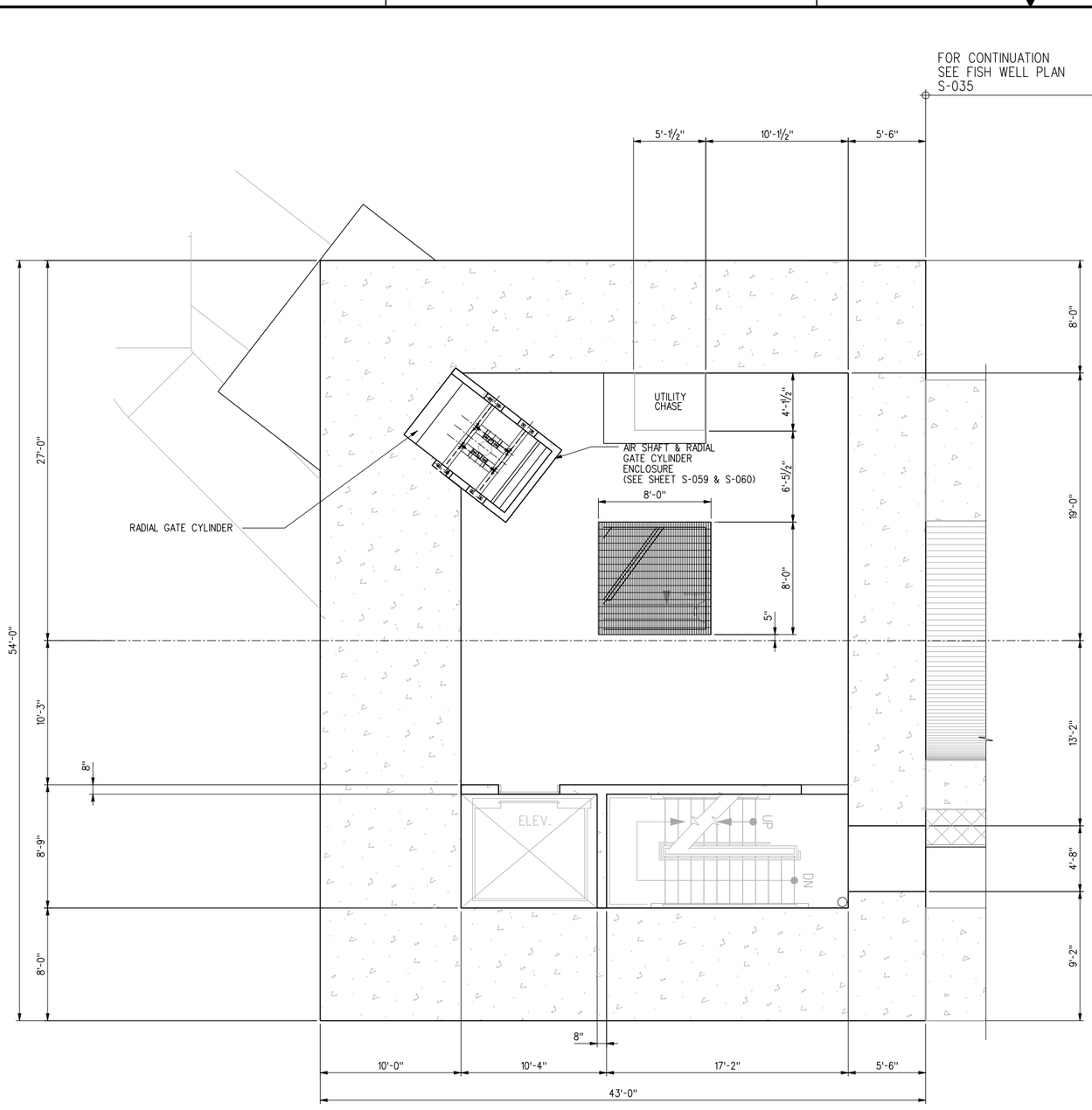

A PLAN EL 1061.5
1/4"=1'-0"

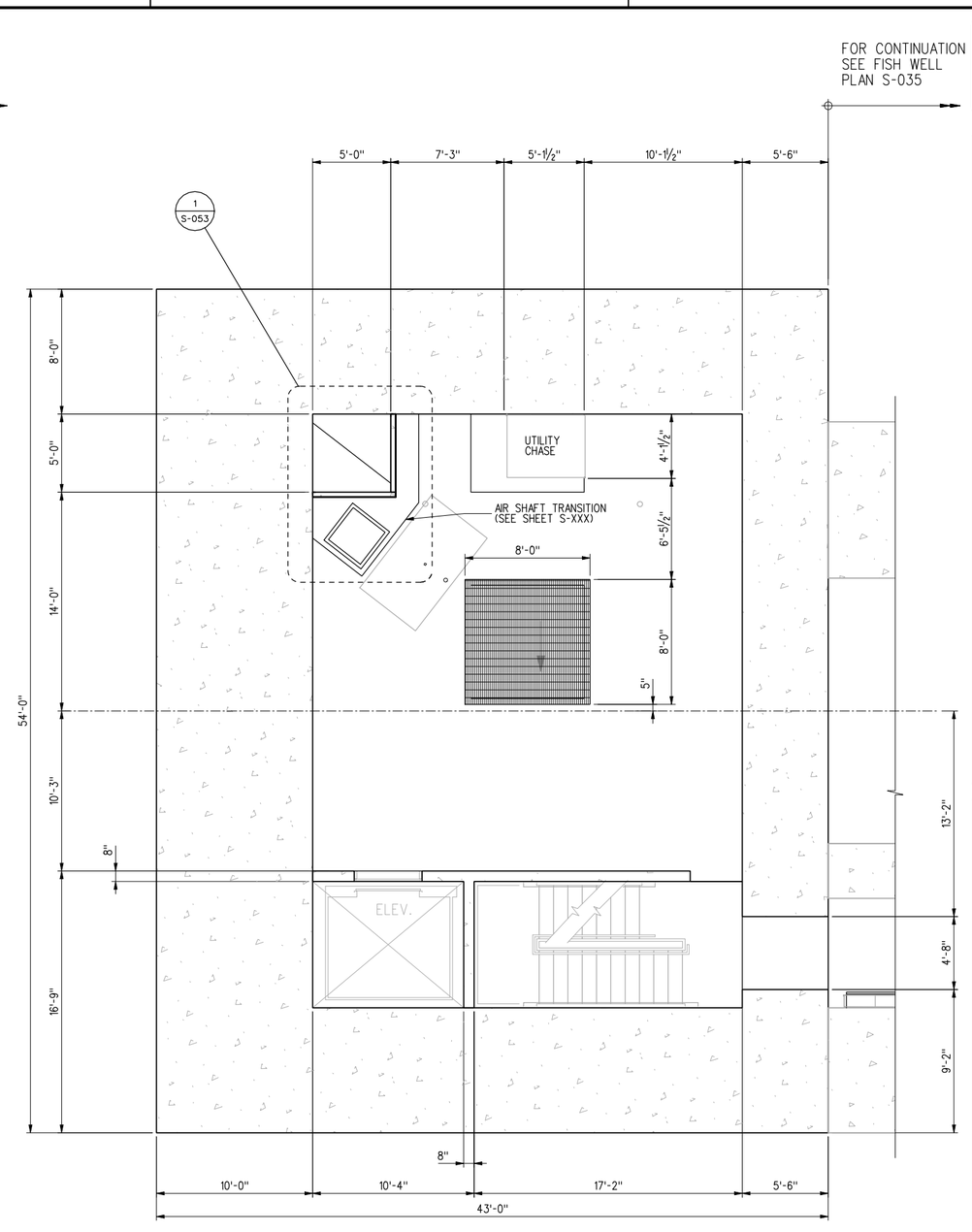

B PLAN EL 1074.13
1/4"=1'-0"

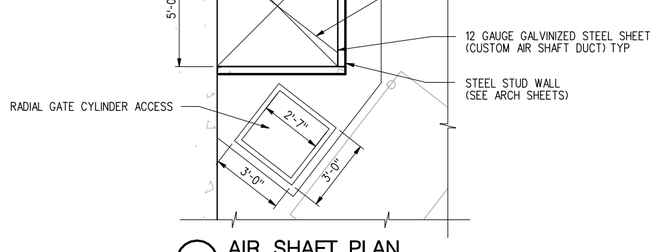

1 AIR SHAFT PLAN
1/2"=1'-0"

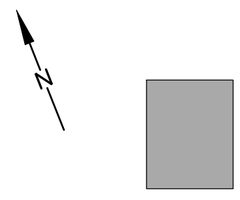

KEY PLAN

NOTES:

1. SEE SHEET S-070 FOR TYPICAL SLAB PENETRATION DETAILS FOR THE UTILITY CHASE AND TOWER GRATING

US Army Corps of Engineers
Seattle District

Symbol	Description
Appr.	Symbol
/ /	Date

Date: 16 MAR 06
File #: E-56-14-19
Rev.

Designed by: X
Drawn by: X
Checked by: X
Prepared by:

U.S.ARMY ENGINEER DISTRICT,SEATTLE
CORPS OF ENGINEERS
SEATTLE, WASHINGTON

ADDITIONAL WATER STORAGE PROJECT
HOWARD HANSON DAM
TOWER PLANS @
EL 1061.5 & 1074.13
GREEN RIVER WASHINGTON

Plate number:
S-053
Sheet of

P:\AECDesigns\VHAW\Structural\VHAWS_ts-053.DGN
DESIGN FILE:
11:55:14 AM
DATE AND TIME PLOTTED: 8/6/2008

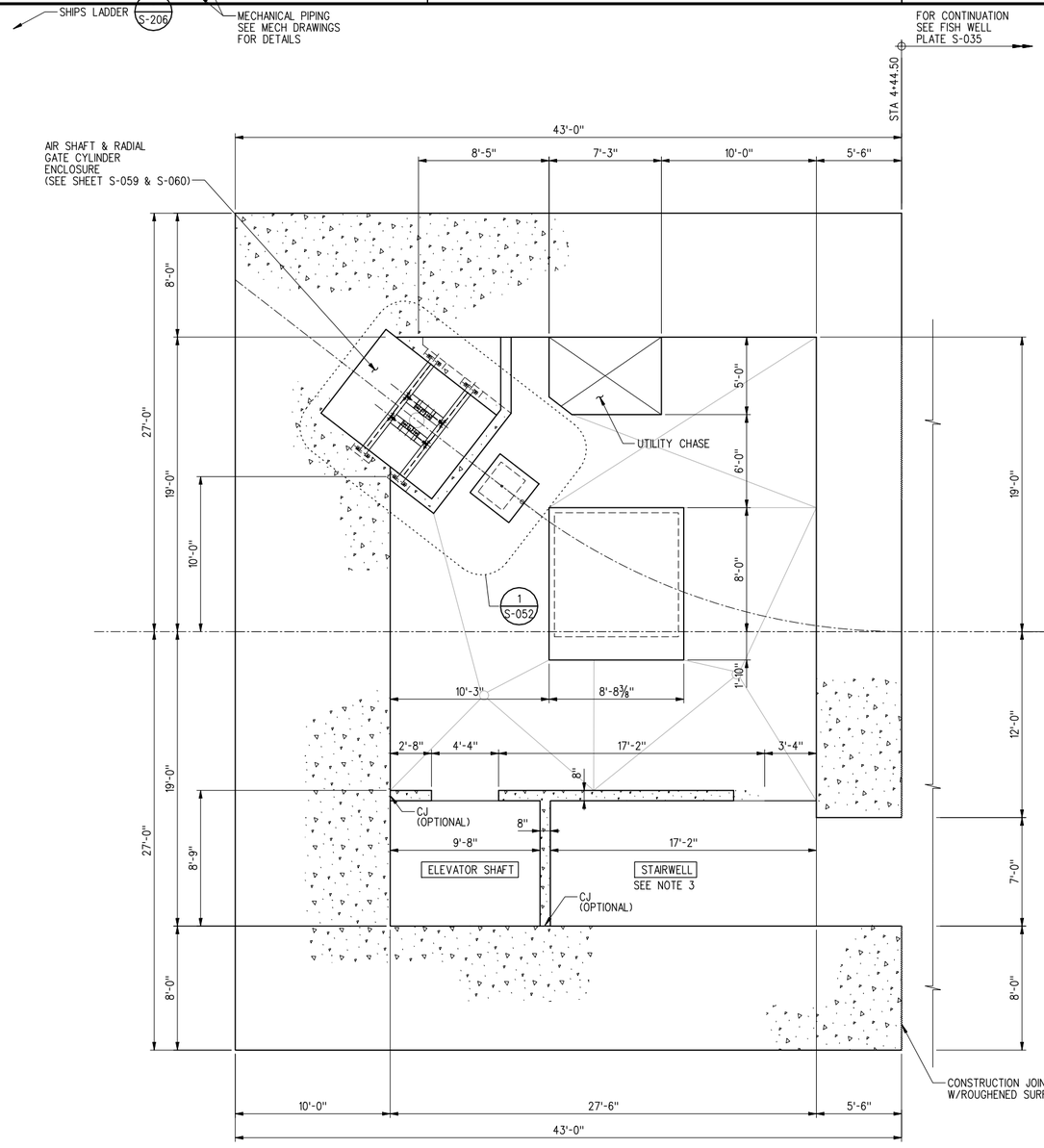

A PLAN EL 1061.5
¼"=1'-0"

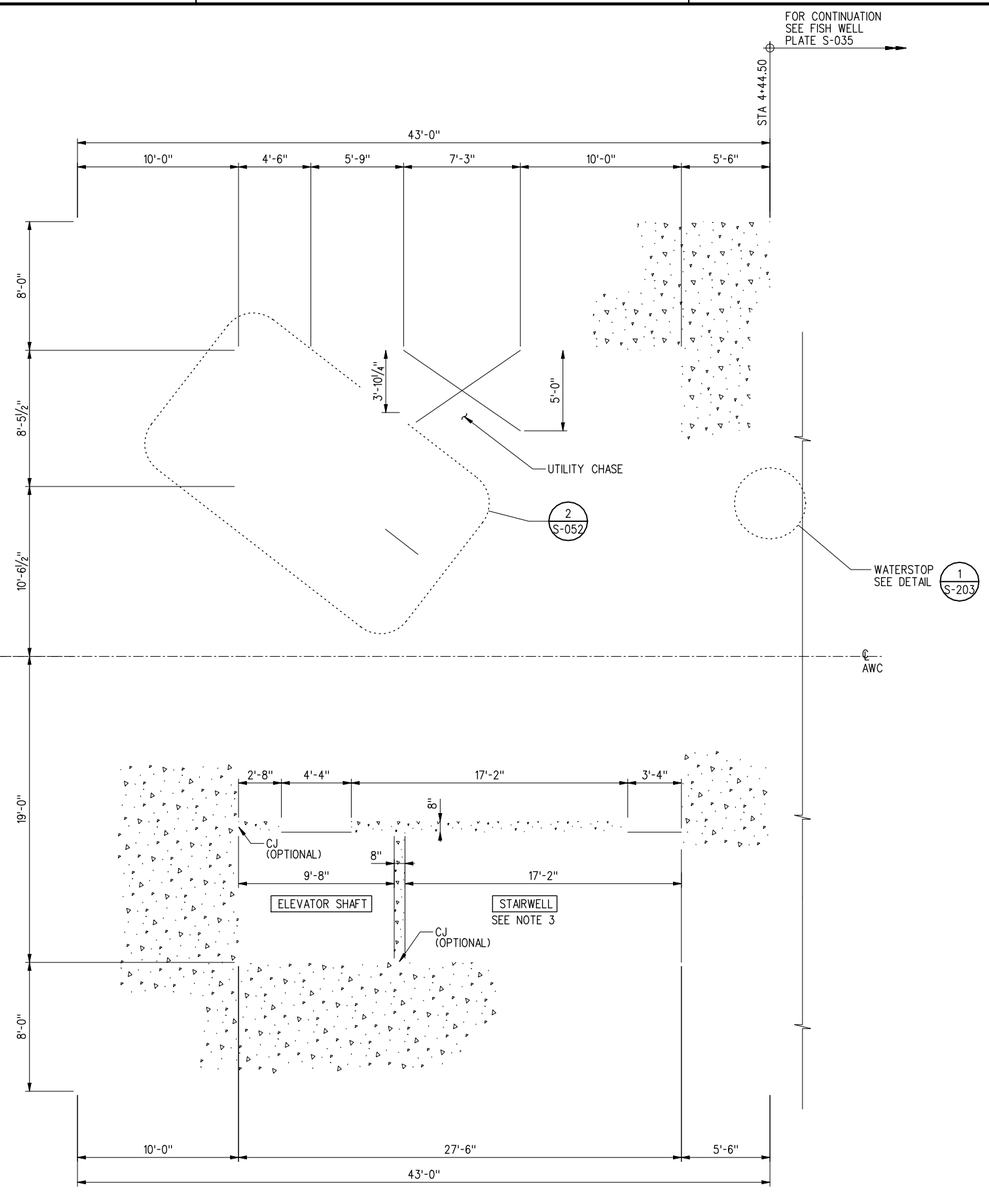

B PLAN EL 1074.13
¼"=1'-0"

NOTES:

1. SEE SHEET S-070 FOR TYPICAL SLAB PENETRATION DETAILS FOR THE UTILITY CHASE AND TOWER GRATING
2. FOR REINFORCING, SEE PLATE NO. S-0xx
3. SEE ARCHITECTURAL DRAWINGS FOR STAIR DETAILS.

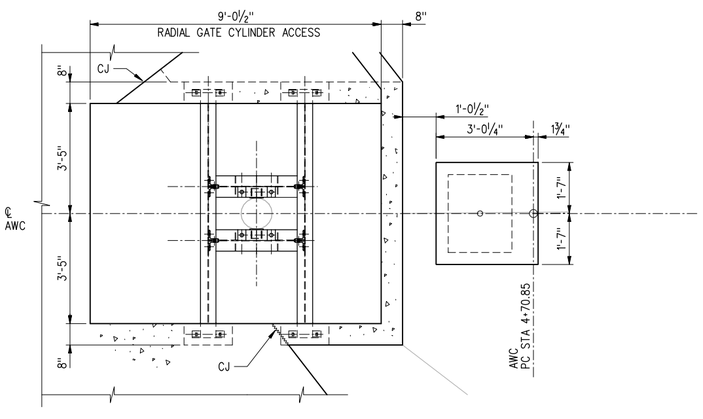

1 PARTIAL PLAN
½"=1'-0"

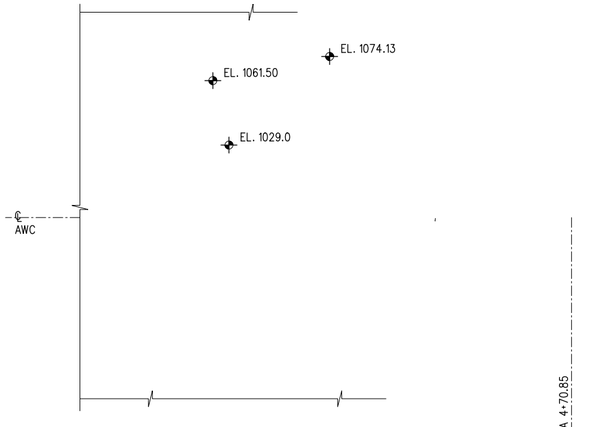

2 PARTIAL PLAN
½"=1'-0"



KEY PLAN

US Army Corps of Engineers
Seattle District

Symbol	Description	Date	Appr.	Symbol	Description

U.S.ARMY ENGINEER DISTRICT,SEATTLE
CORPS OF ENGINEERS
SEATTLE, WASHINGTON

Prepared by:

Designed by: X
Drawn by: X
Checked by: X

Date: 16 MAR 06
File # E-56-14-19
Rev.

ADDITIONAL WATER STORAGE PROJECT
HOWARD HANSON DAM
TOWER PLANS @
EL 1061.5 & 1074.13
GREEN RIVER WASHINGTON

Plate number:
S-052
Sheet of

DATE AND TIME PLOTTED: 8/6/2008 11:55:17 AM DESIGN FILE: I:\AECDesigns\HHAW\Structural\HHAWS-1s-053.DGN

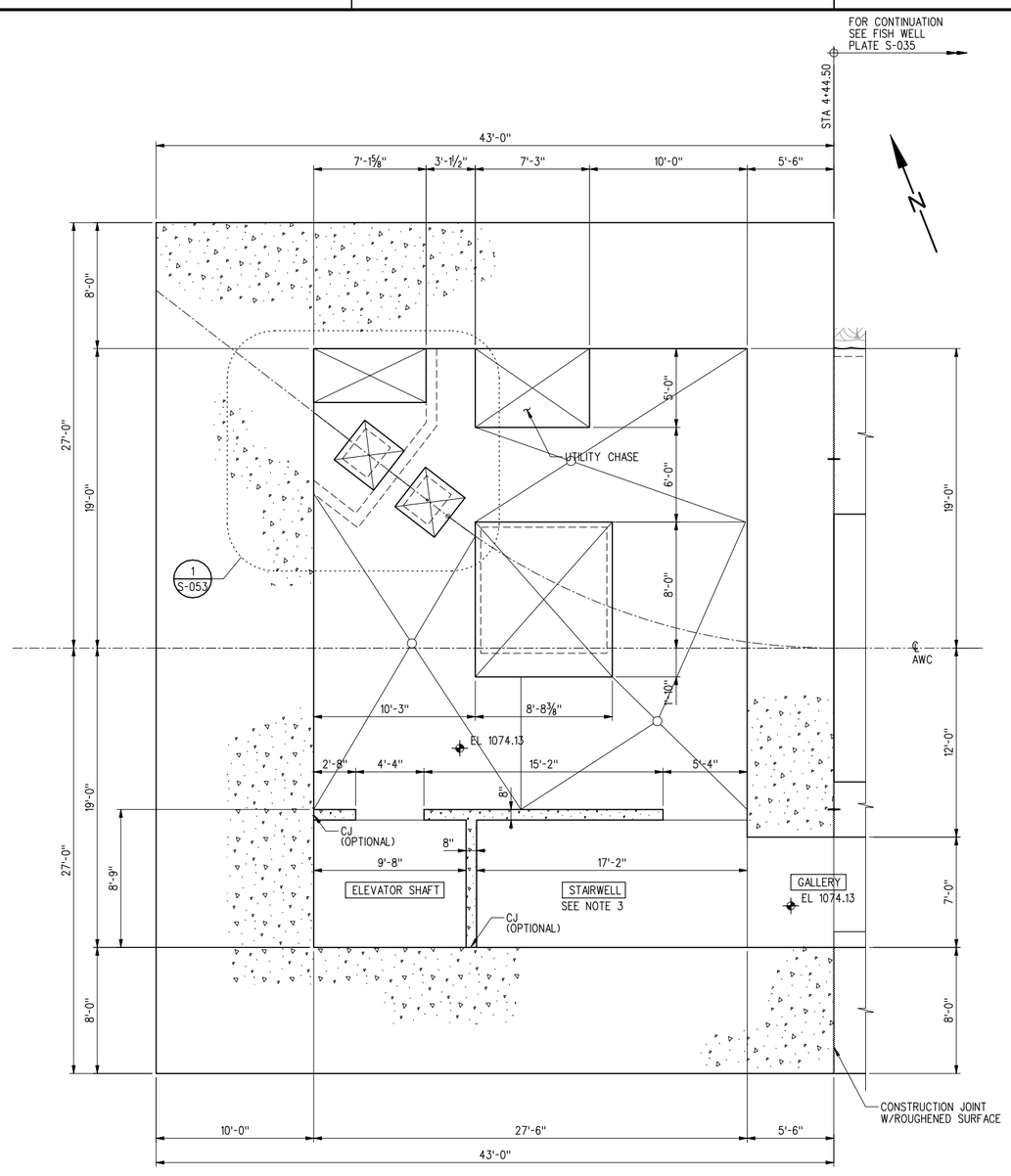

A PLAN FLOOR 5
EL 1074
¼"=1'-0"

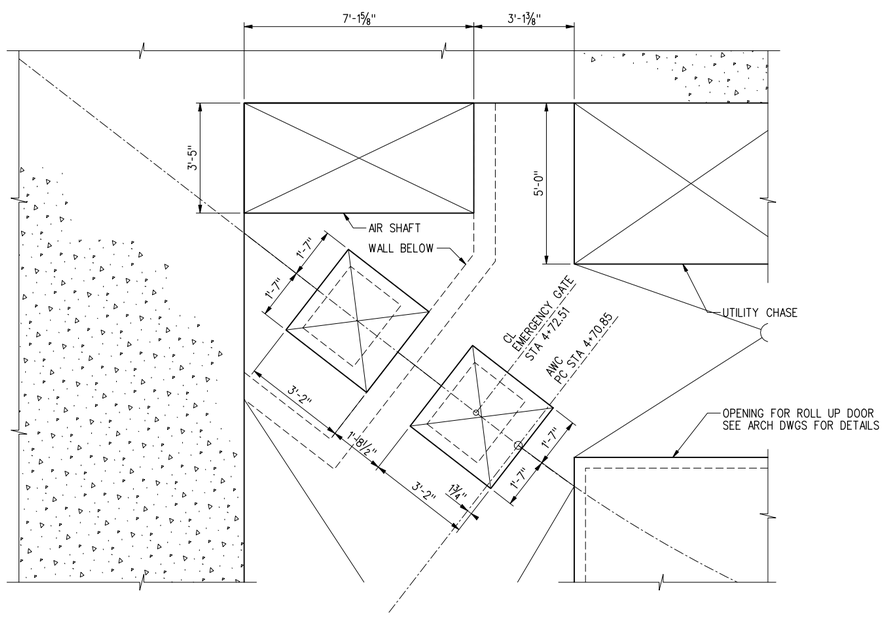

1 PARTIAL PLAN
½"=1'-0"

NOTES:

1. SEE SHEET S-070 FOR TYPICAL SLAB PENETRATION DETAILS FOR THE UTILITY CHASE AND TOWER GRATING
2. FOR REINFORCING, SEE PLATE NO. S-0xx
3. SEE ARCHITECTURAL DRAWINGS FOR STAIR DETAILS.

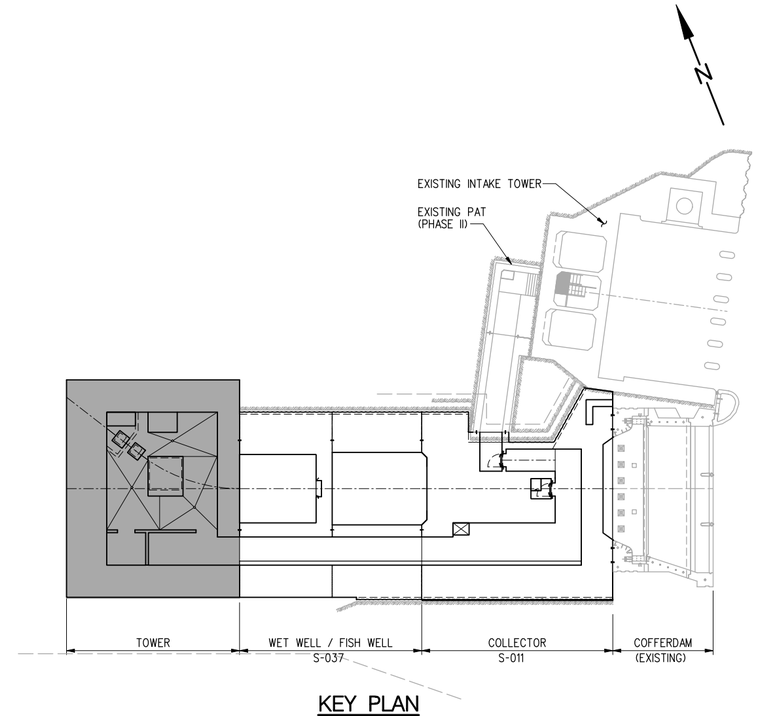

KEY PLAN

US Army Corps of Engineers
Seattle District

Description	Symbol	Appr.	Date
			/ /

Date: 16 MAR 06
File #: E-56-14-19
Rev.

Designed by: X
Drawn by: X
Checked by: X

U.S.ARMY ENGINEER DISTRICT,SEATTLE
CORPS OF ENGINEERS
SEATTLE, WASHINGTON

Prepared by:

ADDITIONAL WATER STORAGE PROJECT
HOWARD HANSON DAM
GREEN RIVER WASHINGTON

TOWER PLAN EL 1074.13

Plate number:
S-053
Sheet of

I:\AECDesigns\HHAW\Structural\HHAWS-1s-053.DGN
DESIGN FILE: 11:55:19 AM
DATE AND TIME PLOTTED: 8/6/2008

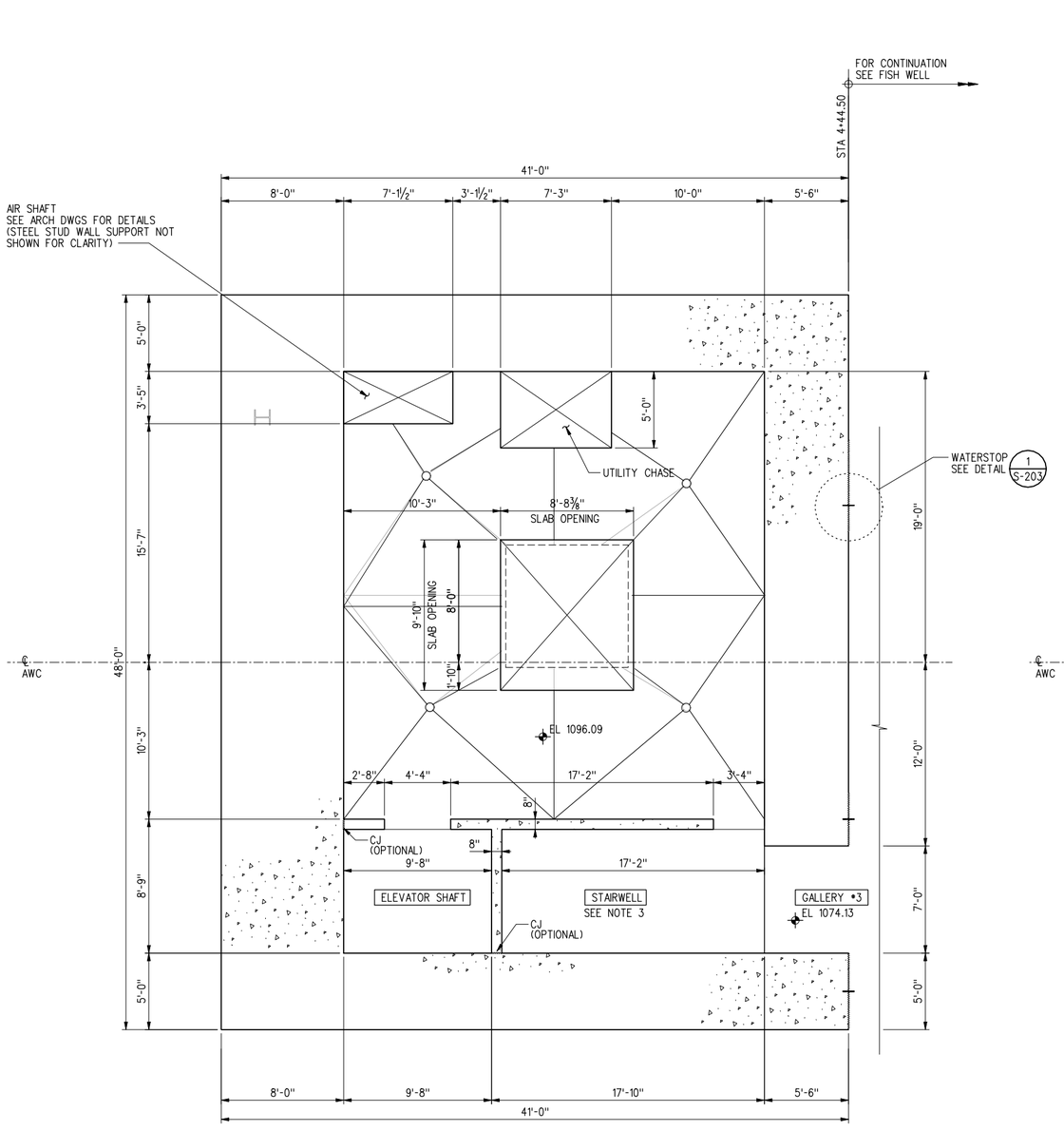

A PLAN FLOOR 6
EL 1096.09
¼"=1'-0"

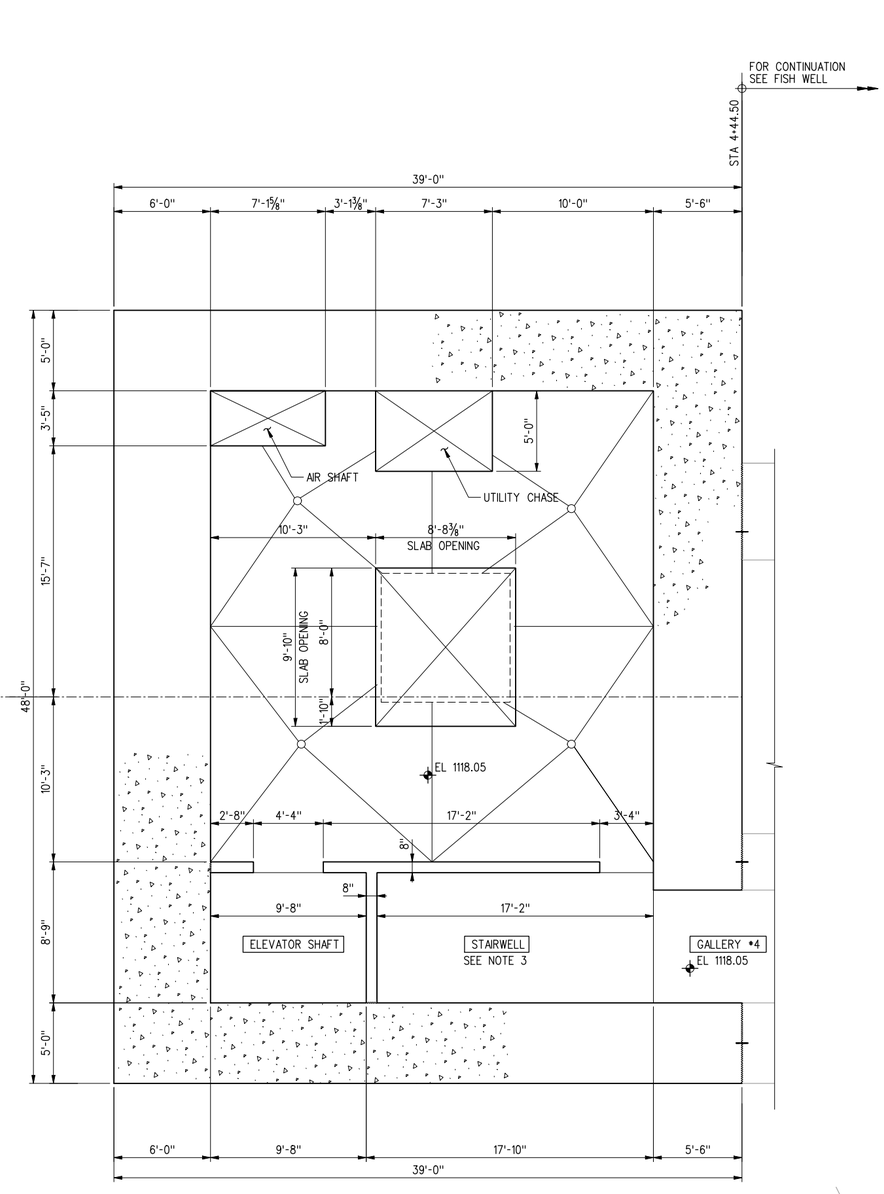

B PLAN FLOOR 7
EL 1118.05
¼"=1'-0"

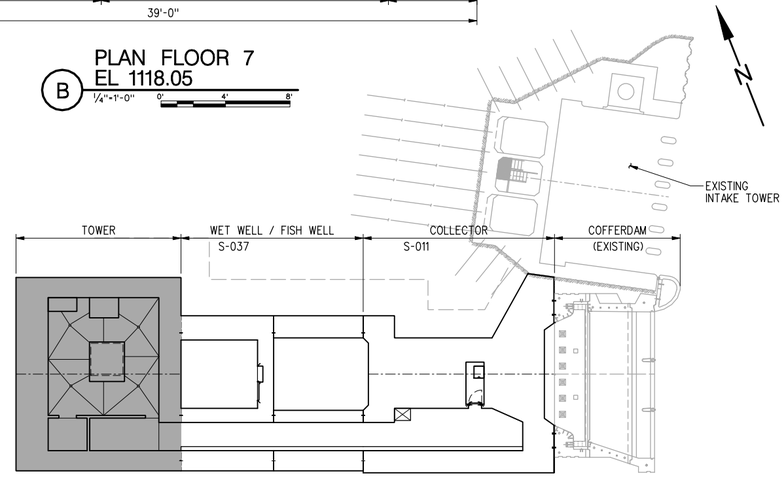

KEY PLAN

NOTES:

1. SEE SHEET S-070 FOR TYPICAL SLAB PENETRATION DETAILS FOR THE UTILITY CHASE AND TOWER GRATING
2. FOR REINFORCING, SEE PLATE NO. S-0xx
3. SEE ARCHITECTURAL DRAWINGS FOR STAIR DETAILS.

US Army Corps of Engineers
Seattle District

Symbol	Description	Appr.	Date
			/ /

Date: 16 MAR 06
File #: E-56-14-19
Rev.

Designed by: X
Drawn by: X
Checked by: X

U.S. ARMY ENGINEER DISTRICT, SEATTLE
CORPS OF ENGINEERS
SEATTLE, WASHINGTON
Prepared by:

ADDITIONAL WATER STORAGE PROJECT
HOWARD HANSON DAM
TOWER PLANS
@ 6TH & 7TH FLOORS
GREEN RIVER WASHINGTON

Plate number:
S-054
Sheet of

I:\AEC Designs\HHAW\Structural\HHAWS-1s-054.DGN
DESIGN FILE:
11:55:30 AM
DATE AND TIME PLOTTED: 8/6/2008

NOTES:

1. SEE SHEET S-070 FOR TYPICAL SLAB PENETRATION DETAILS FOR THE UTILITY CHASE AND TOWER GRATING
2. FOR REINFORCING, SEE PLATE NO. S-0xx
3. SEE ARCHITECTURAL DRAWINGS FOR STAIR DETAILS.

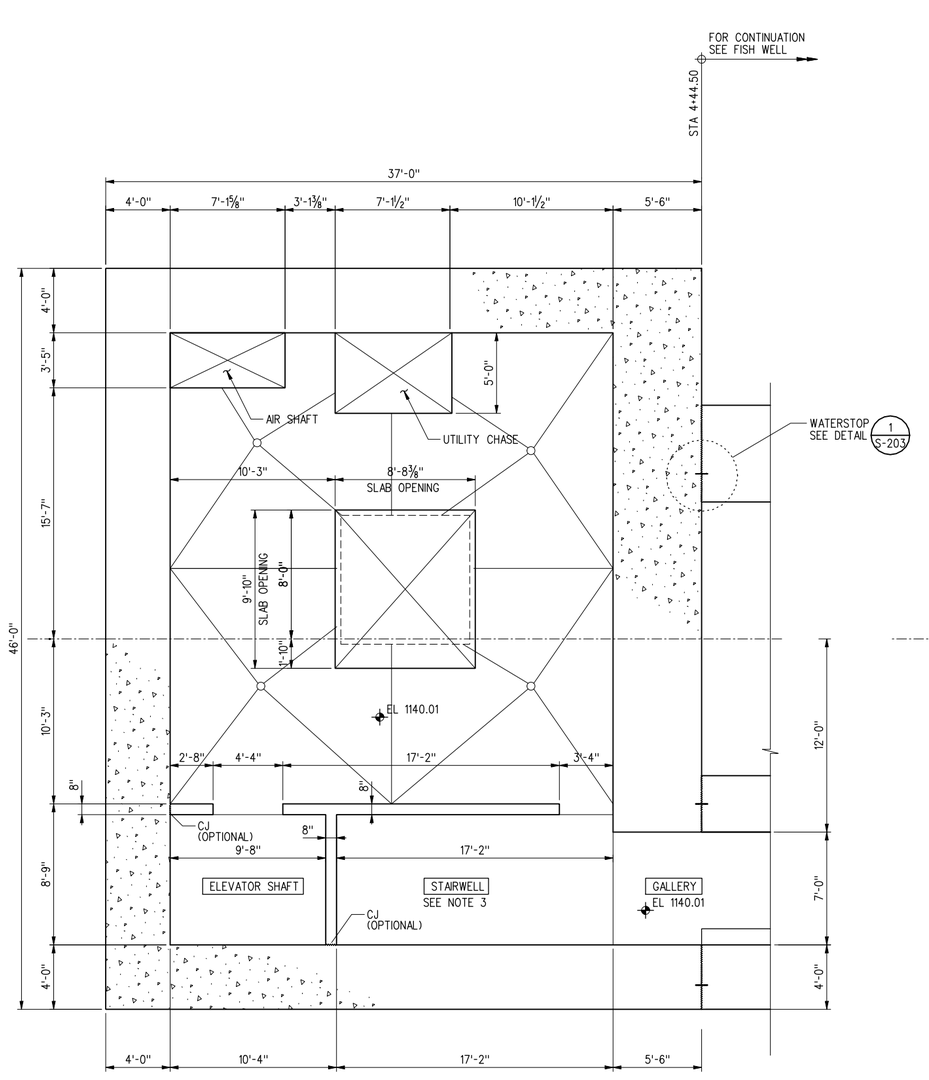

A PLAN FLOOR 8
EL 1140.01
¼"=1'-0"

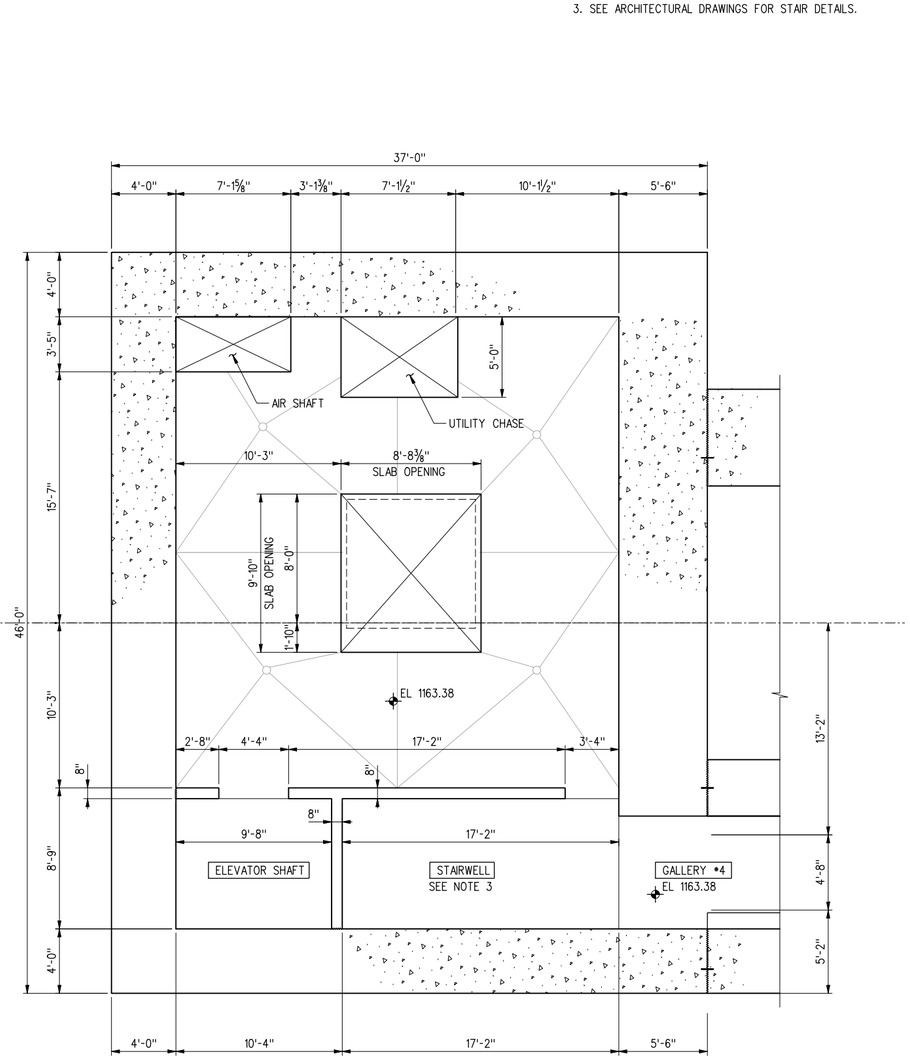

B PLAN FLOOR 9
EL 1163.38
¼"=1'-0"

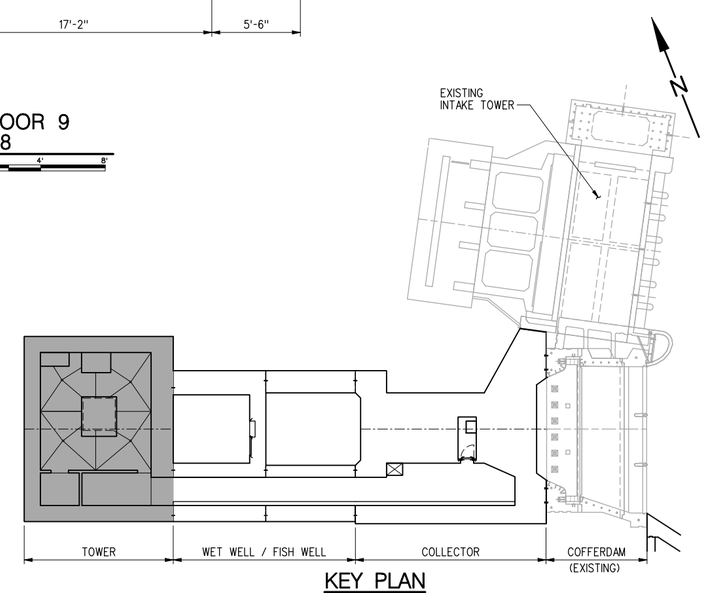

KEY PLAN

US Army Corps of Engineers
Seattle District

Symbol	Description	Date	Appr.	Symbol	Description
		/ /			

U.S.ARMY ENGINEER DISTRICT,SEATTLE
CORPS OF ENGINEERS
SEATTLE, WASHINGTON

Prepared by:

Designed by: X
Drawn by: X
Checked by: X

Date: 16 MAR 06
File # E-56-14-19
Rev.

ADDITIONAL WATER STORAGE PROJECT
HOWARD HANSON DAM
TOWER PLANS
EL 1140.0 & 1163.38
GREEN RIVER WASHINGTON

Plate number:
S-055
Sheet of

DATE AND TIME PLOTTED: 8/6/2008 11:55:35 AM DESIGN FILE: I:\AECDesigns\HHAW\Structural\HHAWS-1s-055.DGN

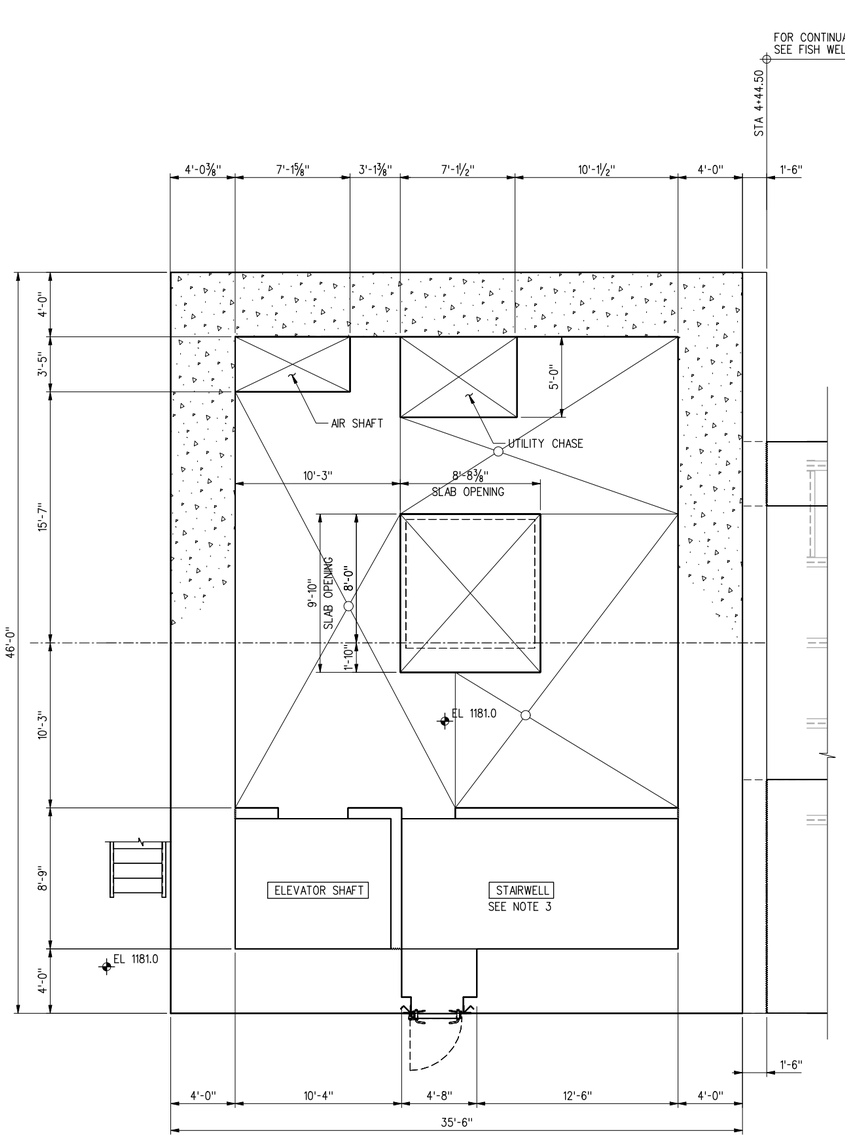

PLAN FLOOR 10
EL 1181.0

A 1/4"=1'-0" 0 4' 8'

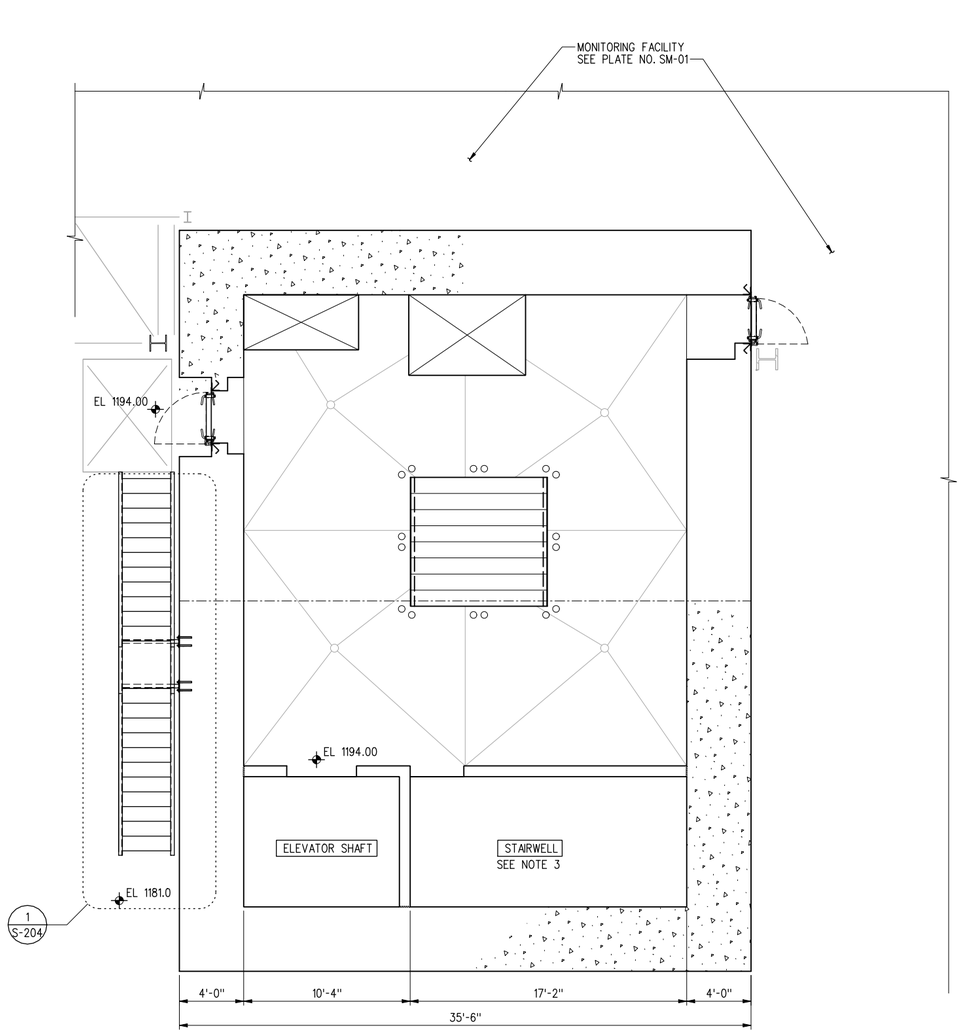

PLAN FLOOR 11
EL 1194.0

B 1/4"=1'-0" 0 4' 8'

NOTES:

1. SEE SHEET S-070 FOR TYPICAL SLAB PENETRATION DETAILS FOR THE UTILITY CHASE AND TOWER GRATING
2. FOR REINFORCING, SEE PLATE NO. S-0xx
3. SEE ARCHITECTURAL DRAWINGS FOR STAIR DETAILS.

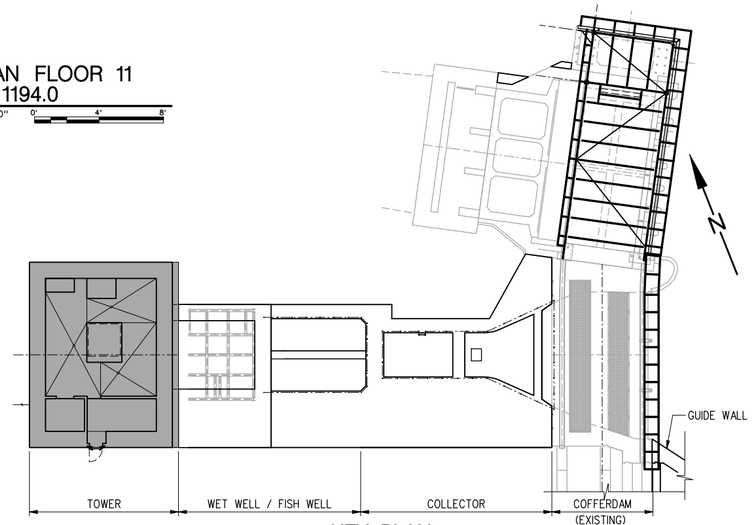

KEY PLAN

US Army Corps of Engineers
Seattle District

Symbol	Description
Appr.	
Date	

Designed by:	X
Drawn by:	X
Checked by:	X
Date:	16 MAR 06
File #	E-56-14-19
Rev.	

U.S.ARMY ENGINEER DISTRICT,SEATTLE
CORPS OF ENGINEERS
SEATTLE, WASHINGTON
Prepared by:

ADDITIONAL WATER STORAGE PROJECT
HOWARD HANSON DAM
GREEN RIVER WASHINGTON

TOWER PLANS
EL 1181.0 & EL 1194.0

Plate number:
S-056
Sheet of

P:\AECDesigns\HHAWS\Structural\HHAWS_ts-056.DGN
DESIGN FILE:
11:55:39 AM
DATE AND TIME PLOTTED: 8/6/2008

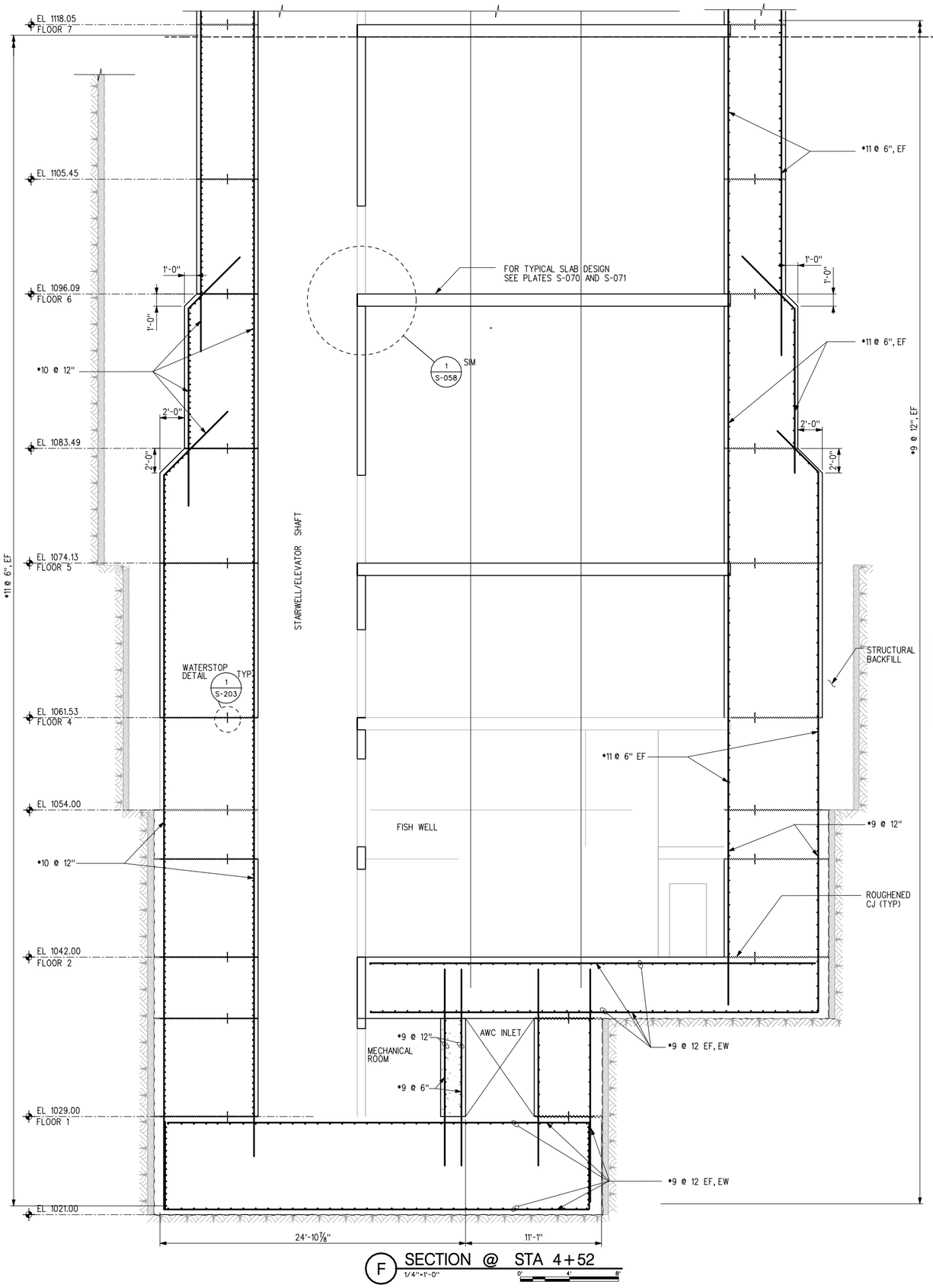

F SECTION @ STA 4+52
1/4"=1'-0"

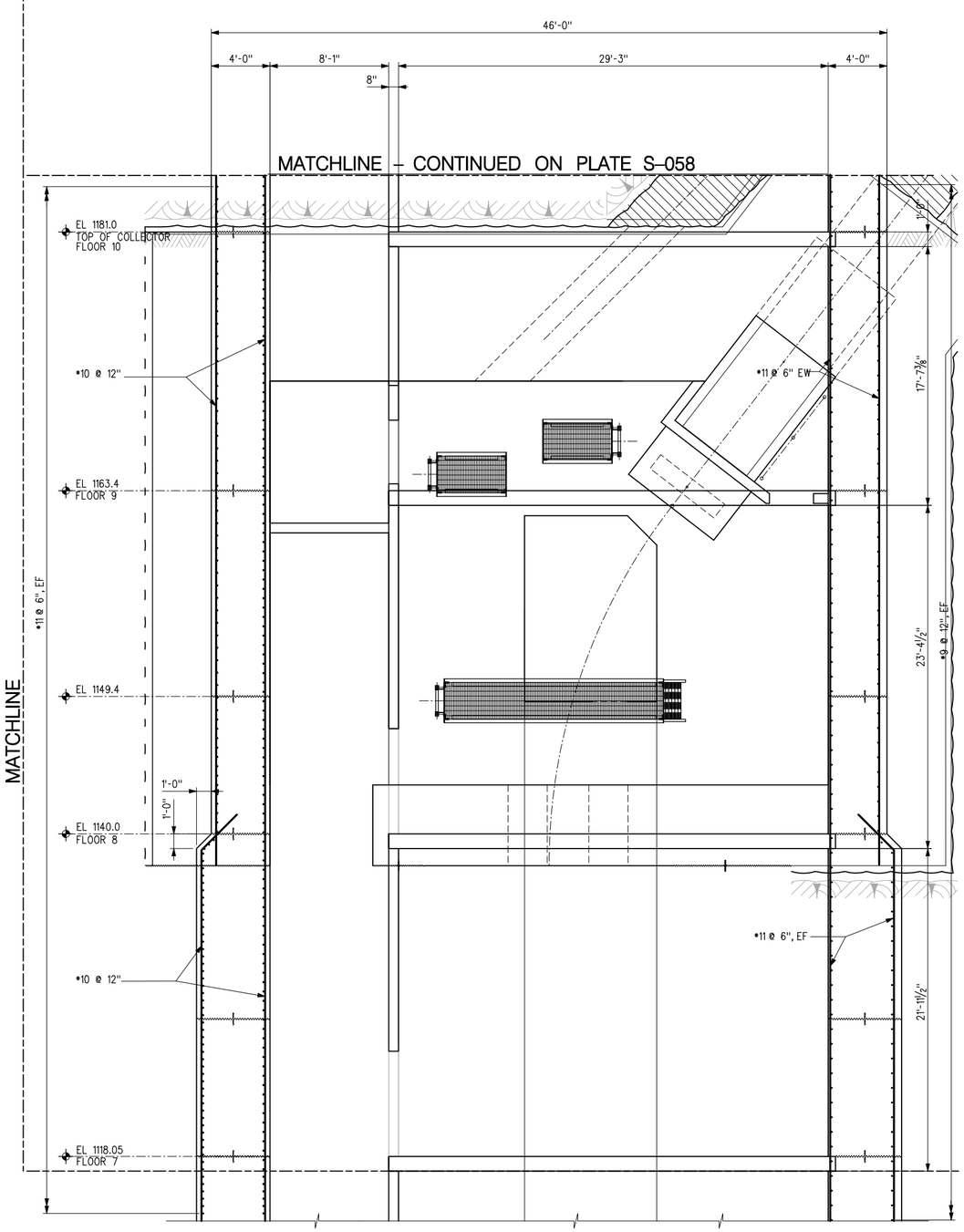

US Army Corps of Engineers
Seattle District

Symbol	Date	Appr.	Description
	/ /		

Date: 16 MAR 06
File #: E-56-14-19
Rev.

Designed by: X
Drawn by: X
Checked by: X

U.S.ARMY ENGINEER DISTRICT,SEATTLE
CORPS OF ENGINEERS
SEATTLE, WASHINGTON
Prepared by:

ADDITIONAL WATER STORAGE PROJECT
HOWARD HANSON DAM
TOWER SECTION
@ STA 4+52.00
GREEN RIVER WASHINGTON

Plate number:
S-057
Sheet of

DESIGN FILE: I:\AEC\Designs\HHAW\Structural\HHAWS_ts-057.DGN
DATE AND TIME PLOTTED: 8/6/2008 11:56:07 AM

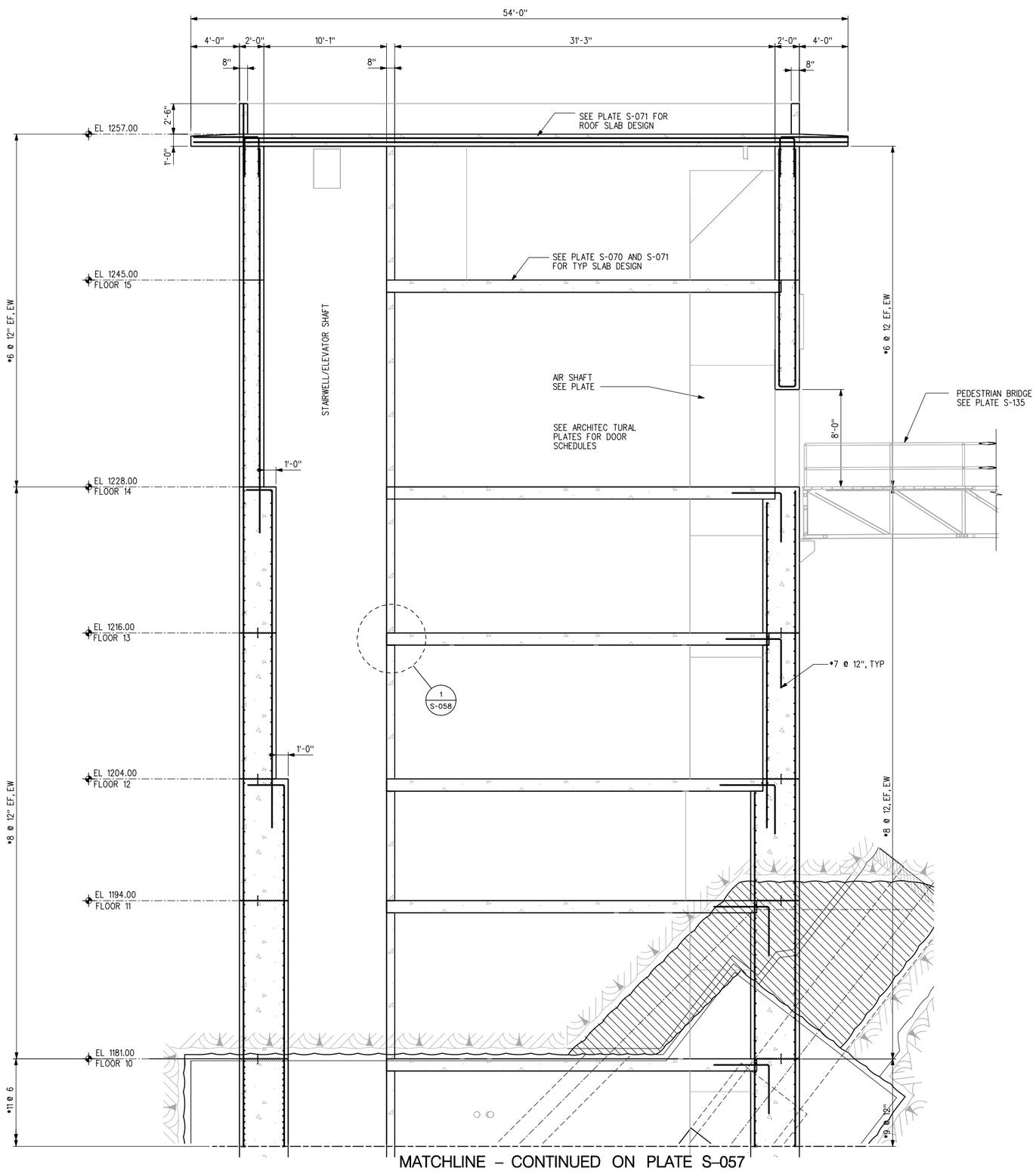

G SECTION @ STA 4+52
1/4"=1'-0"

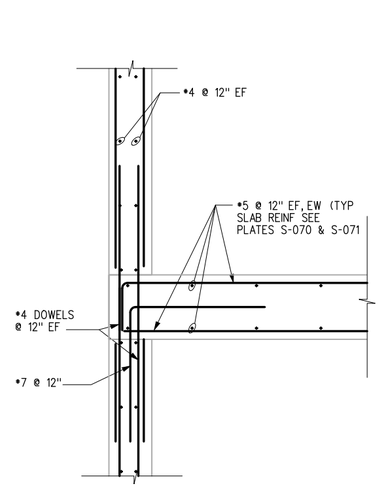

1 STAIRWELL WALL DETAIL
1"=1'-0"

US Army Corps of Engineers
Seattle District

Symbol	Description	Appr.	Date
			/ /

U.S.ARMY ENGINEER DISTRICT,SEATTLE
CORPS OF ENGINEERS
SEATTLE, WASHINGTON

Designed by: X
Drawn by: X
Checked by: X
Prepared by:

Date: 16 MAR 06
File #: E-56-14-19
Rev.:

ADDITIONAL WATER STORAGE PROJECT
HOWARD HANSON DAM
GREEN RIVER WASHINGTON

TOWER SECTION II @ STA 4+52

Plate number:
S-058
Sheet of

DATE AND TIME PLOTTED: 8/6/2008 11:56:27 AM
DESIGN FILE: J:\AEC\Designs\HHAW\Structural\HHAWS-1s-058.DGN

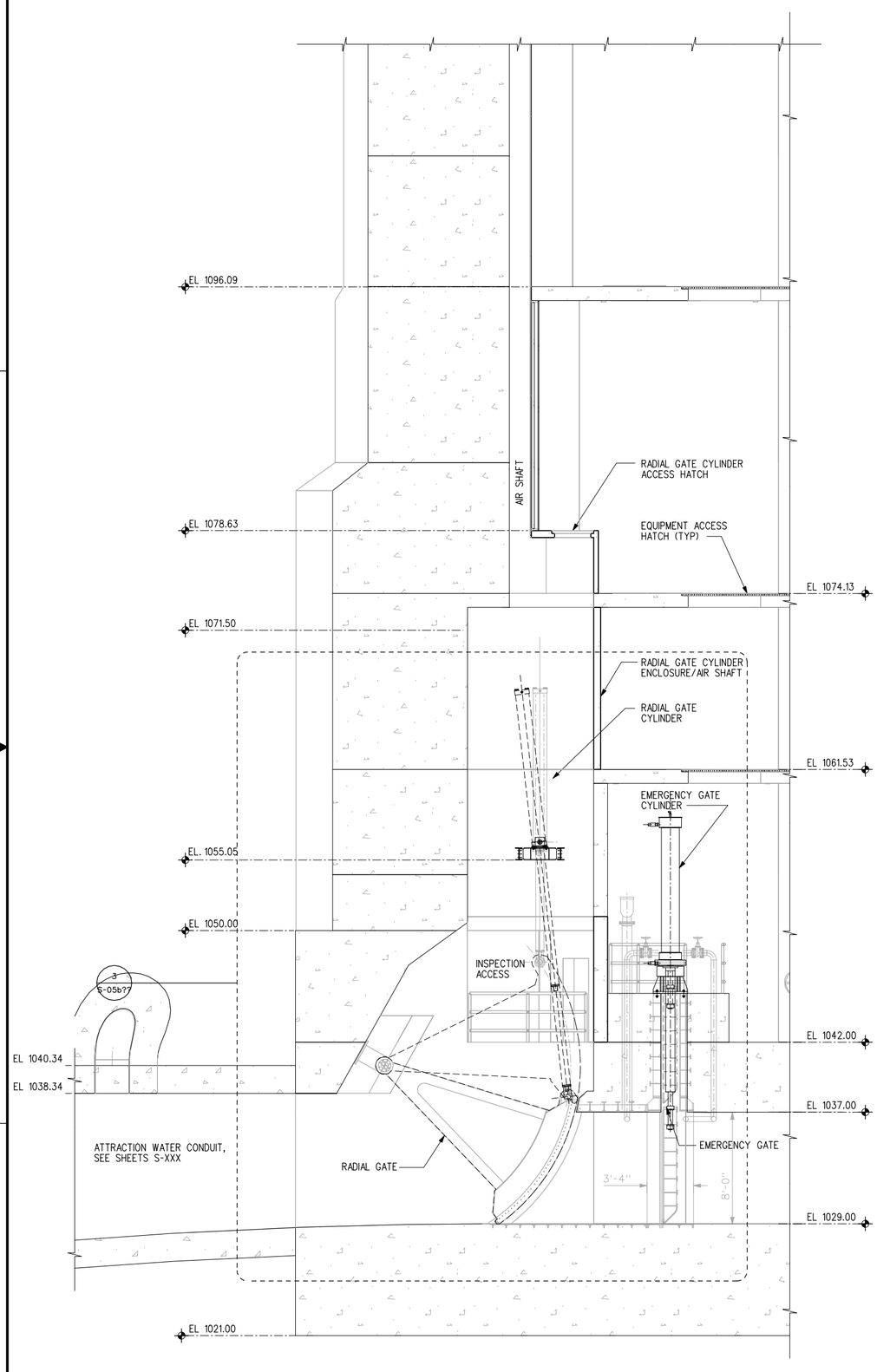

2 GATE CHAMBER PROFILE
1/4"=1'-0"

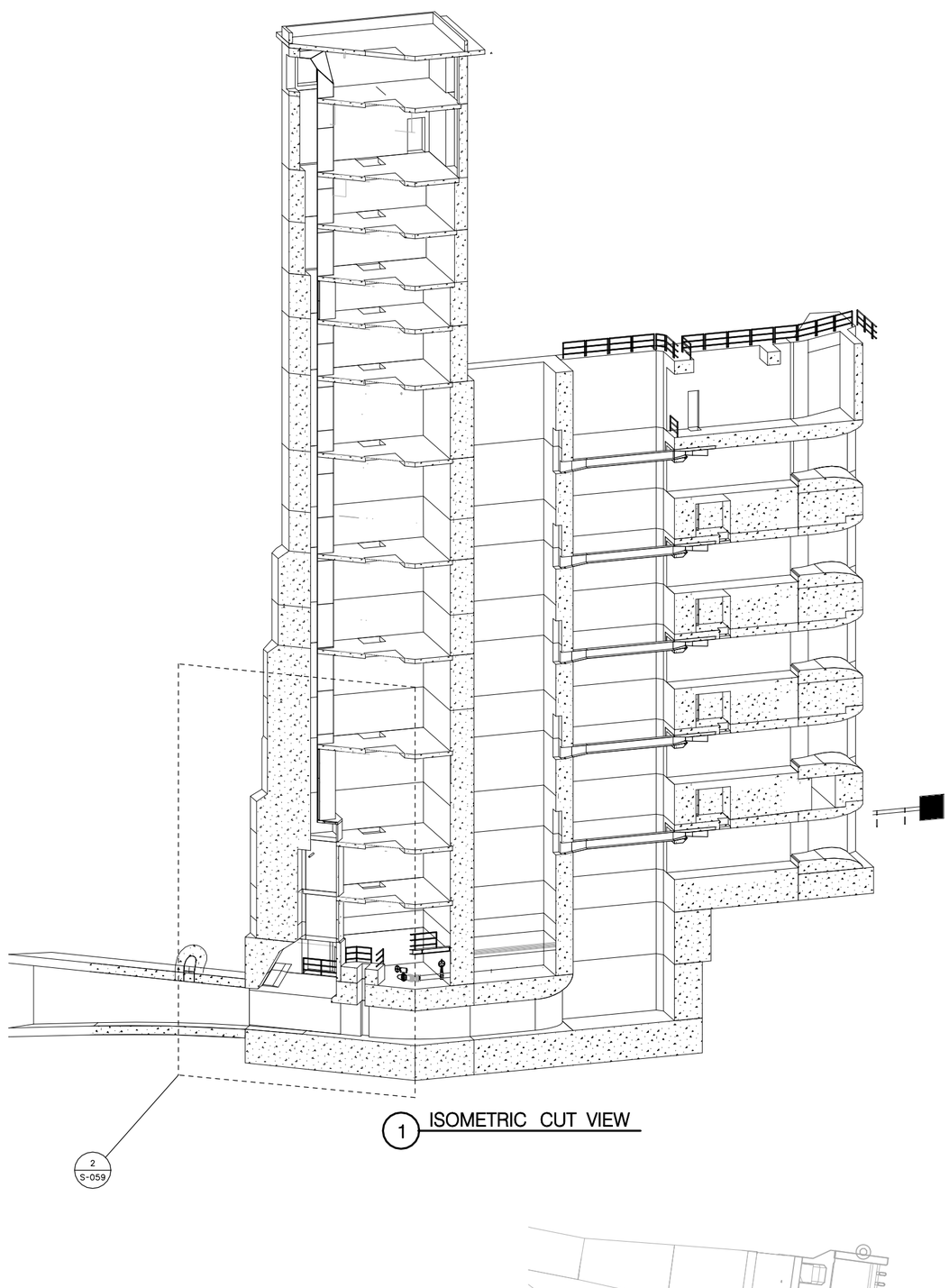

1 ISOMETRIC CUT VIEW

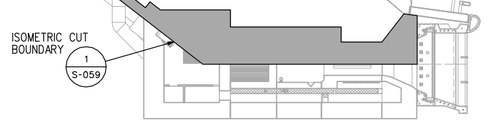

KEY PLAN

US Army Corps of Engineers
Seattle District

Symbol	Description	Symbol	Appr.	Date
				/ /

Date: 16 MAR 06
File #: E-56-14-19
Designed by: X
Drawn by: X
Checked by: X
Rev.

U.S. ARMY ENGINEER DISTRICT, SEATTLE
CORPS OF ENGINEERS
SEATTLE, WASHINGTON
Prepared by:

ADDITIONAL WATER STORAGE PROJECT
HOWARD HANSON DAM
GATE CHAMBER PROFILE
GREEN RIVER WASHINGTON

Plate number:
S-059
Sheet of

J:\AEC\Designs\HHAW\Structural\HHAWS-1s-059.DGN
DESIGN FILE: J:\AEC\Designs
11:56:45 AM
DATE AND TIME PLOTTED: 8/6/2008

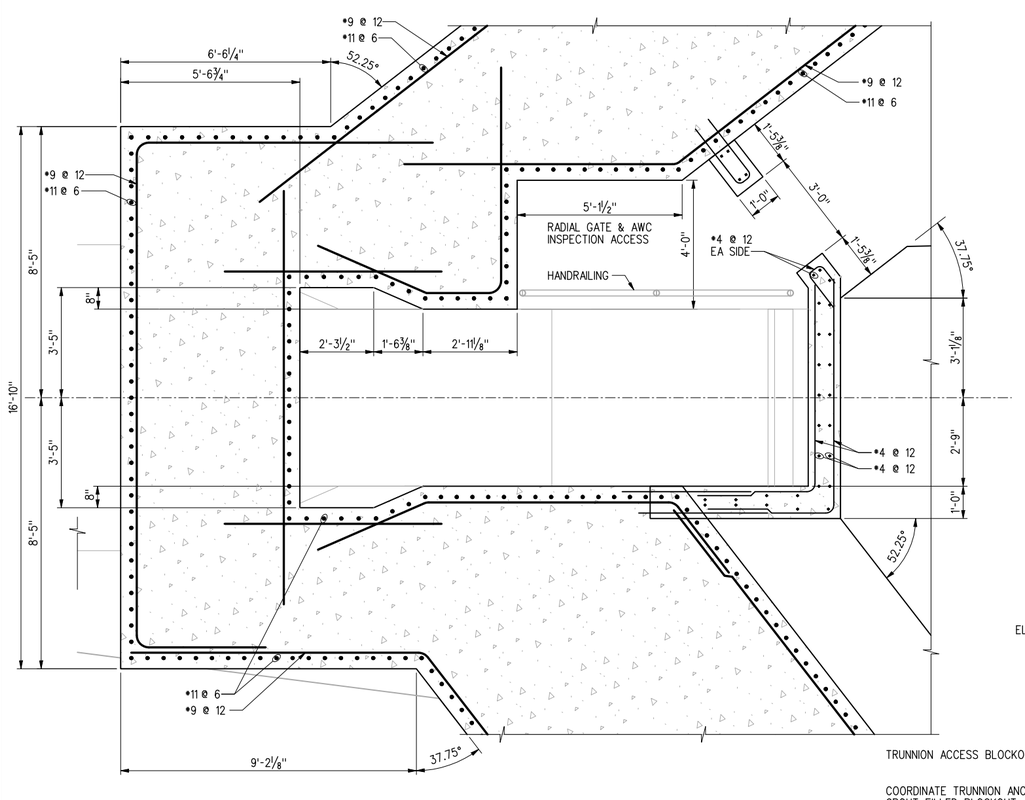

B REINFORCING AT RADIAL GATE
1/2"=1'-0"

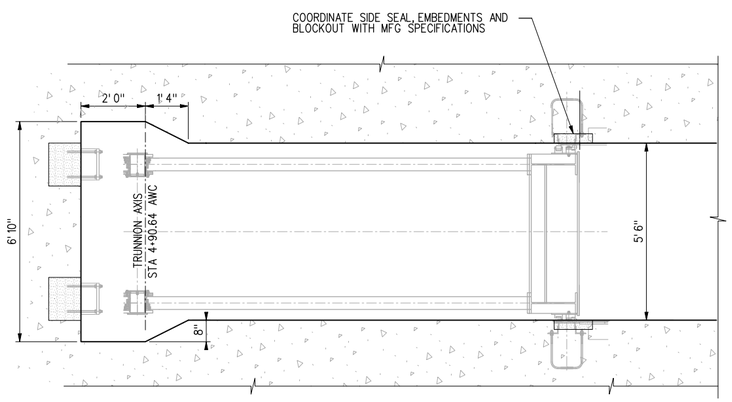

A RADIAL GATE ENCLOSURE SECTION
1/2"=1'-0"

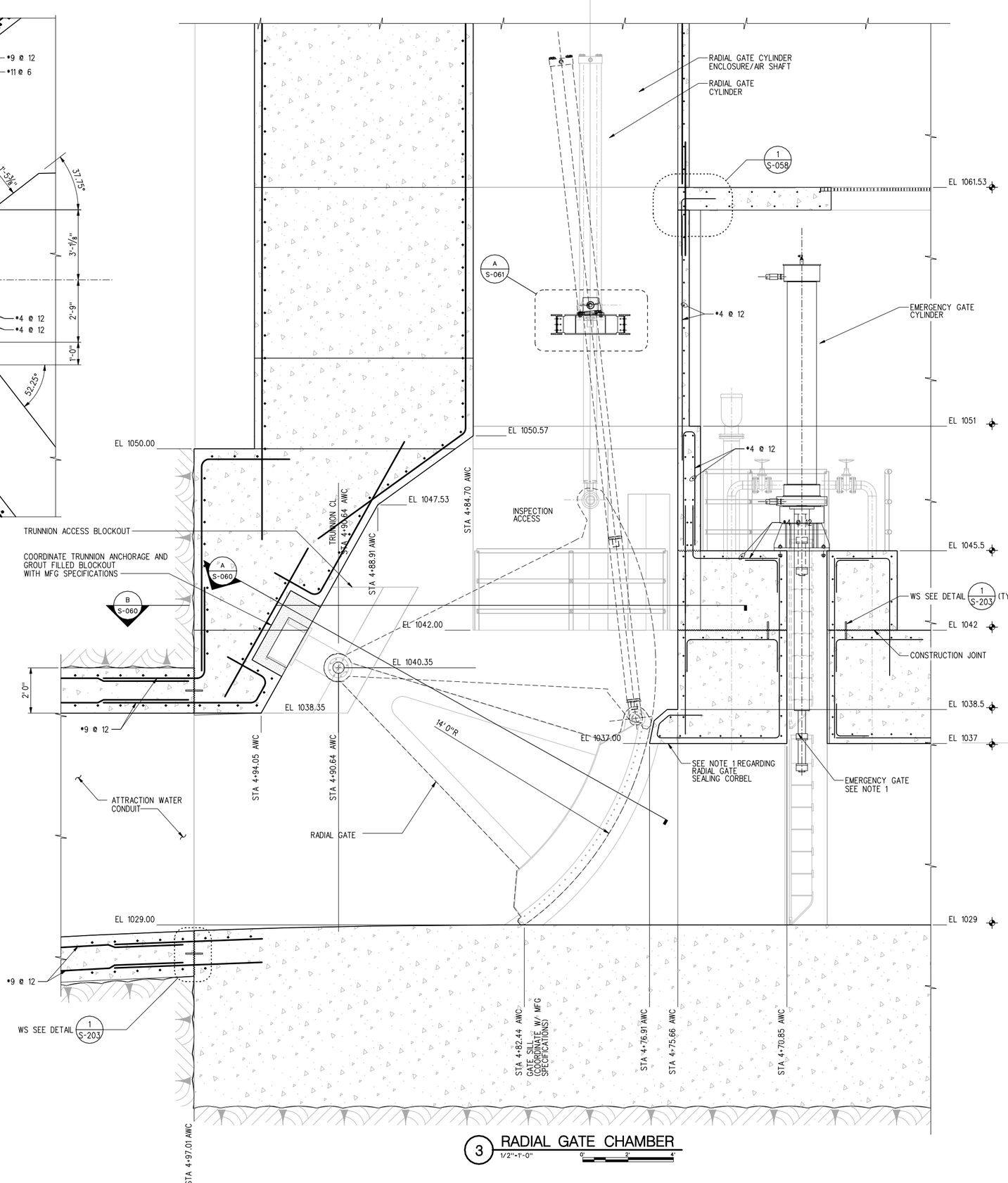

3 RADIAL GATE CHAMBER
1/2"=1'-0"

NOTES:

1. STRUCTURAL REQUIREMENTS FOR ANCHORAGE, REINFORCING AND EMBEDMENTS ASSOCIATED WITH RADIAL GATE, EMERGENCY GATE AND MECHANICAL OPERATORS TO BE COORDINATED WITH MANUFACTERERS SPECIFICATIONS. SEE MECHANICAL SHEETS M-XXX.
2. FOR ATTRACTION WATER CONDUIT (AWC) DESIGN, SEE SECTION A, ST-5
3. FOR TOWER REINFORCING, SEE SHEET S-057 & S-058

US Army Corps of Engineers
Seattle District

Symbol	Description	Date	Appr.	Symbol	Description

Designed by: X
Drawn by: X
Checked by: X
Date: 16 MAR 06
File #: E-56-14-19
Rev.

U.S. ARMY ENGINEER DISTRICT, SEATTLE
CORPS OF ENGINEERS
SEATTLE, WASHINGTON
Prepared by:

ADDITIONAL WATER STORAGE PROJECT
HOWARD HANSON DAM
RADIAL GATE CHAMBER
SECTIONS & DETAILS
GREEN RIVER WASHINGTON

Plate number:
S-060
Sheet of

DATE AND TIME PLOTTED: 8/6/2008 11:57:03 AM DESIGN FILE: I:\AECDesigns\HHAW\Structural\HHAWS-1s-060.DGN

FOR CONTINUATION
SEE FISH WELL PLAN S-035

FOR CONTINUATION
SEE FISH WELL
PLANS S-035

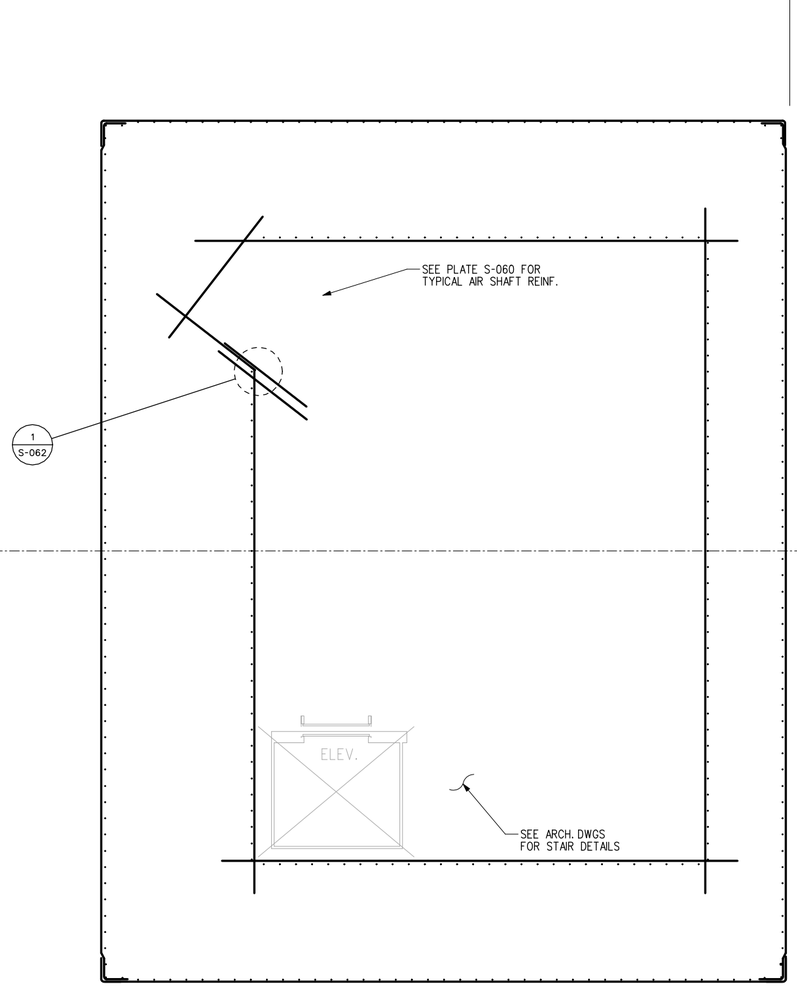

PLAN EL 1054 (1042 SIM.)

1/4"=1'-0" 0' 4' 8'

TYP. WALL REINFORCING:
VERTICAL: #10 @ 12"
HORIZONTAL: #9 @ 12"
SEE PLATE S-057 FOR TYP STAIRWELL WALL REINF.

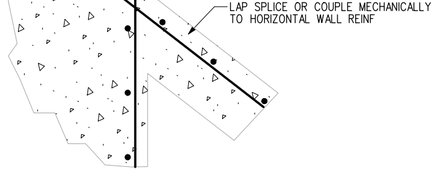

1 TYP AIR SHAFT REINFORCING

1"=1'-0" 0' 1' 2'

REINFORCEMENT: #4 @ 12 EW

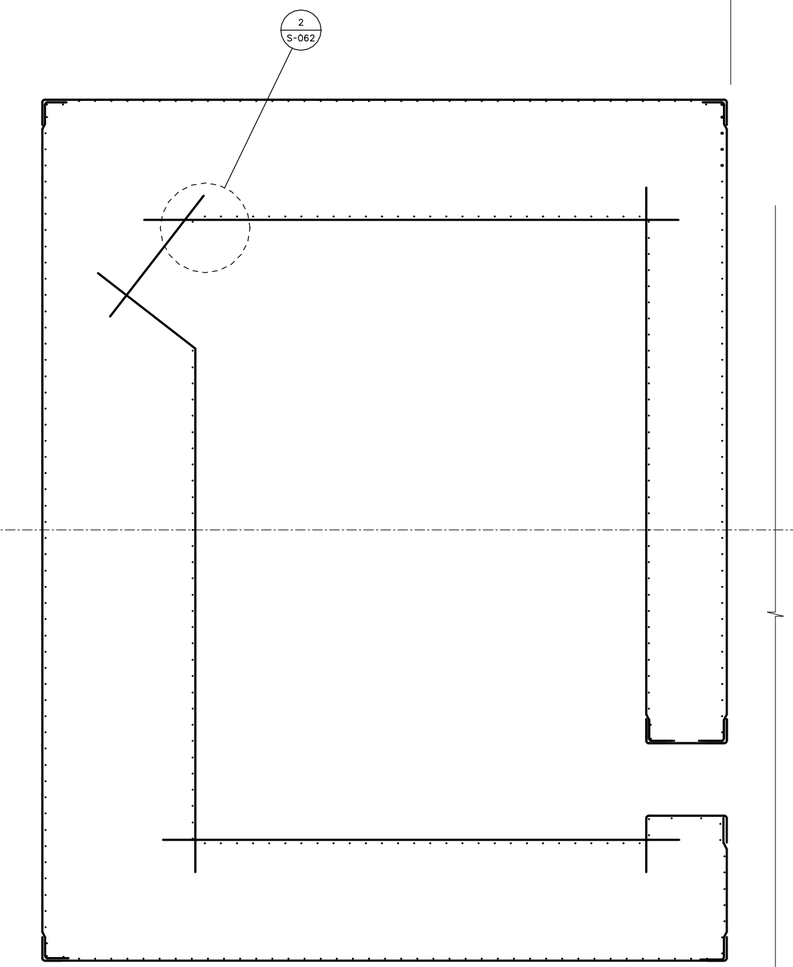

PLAN EL 1061.53 & EL 1074.13

1/4"=1'-0" 0' 4' 8'

TYP. WALL REINFORCING:
VERTICAL: #10 @ 12"
HORIZONTAL: #9 @ 12"
SEE PLATE S-057 FOR TYP STAIRWELL WALL REINF.

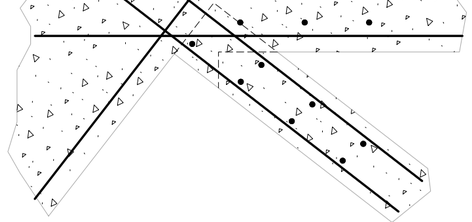

2 TYP AIR SHAFT REINFORCING

1"=1'-0" 0' 1' 2'

REINFORCEMENT: #4 @ 12 EW, EF

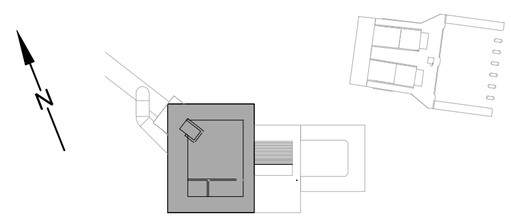

KEY PLAN

US Army Corps of Engineers
Seattle District

Symbol	Description	Appr.	Date
			/ /

Date: 16 MAR 06
File #: E-56-14-19
Rev.

Designed by: X
Drawn by: X
Checked by: X

U.S.ARMY ENGINEER DISTRICT,SEATTLE
CORPS OF ENGINEERS
SEATTLE, WASHINGTON
Prepared by:

ADDITIONAL WATER STORAGE PROJECT
HOWARD HANSON DAM
GREEN RIVER WASHINGTON

TOWER WALL REINFORCING PLANS @ ELs 1042, 1054, 1063.53 & 1074.13

Plate number:
S-062
Sheet of

DESIGN FILE: I:\AEC\Designs\HHAW\Structural\HHAWS-ts-061.DGN
DATE AND TIME PLOTTED: 8/6/2008 11:57:15 AM

NOTES:

1. SEE S-050 FOR CURVE DATA.
2. SEE S-001 AND S-002 FOR REINFORCING NOTES.

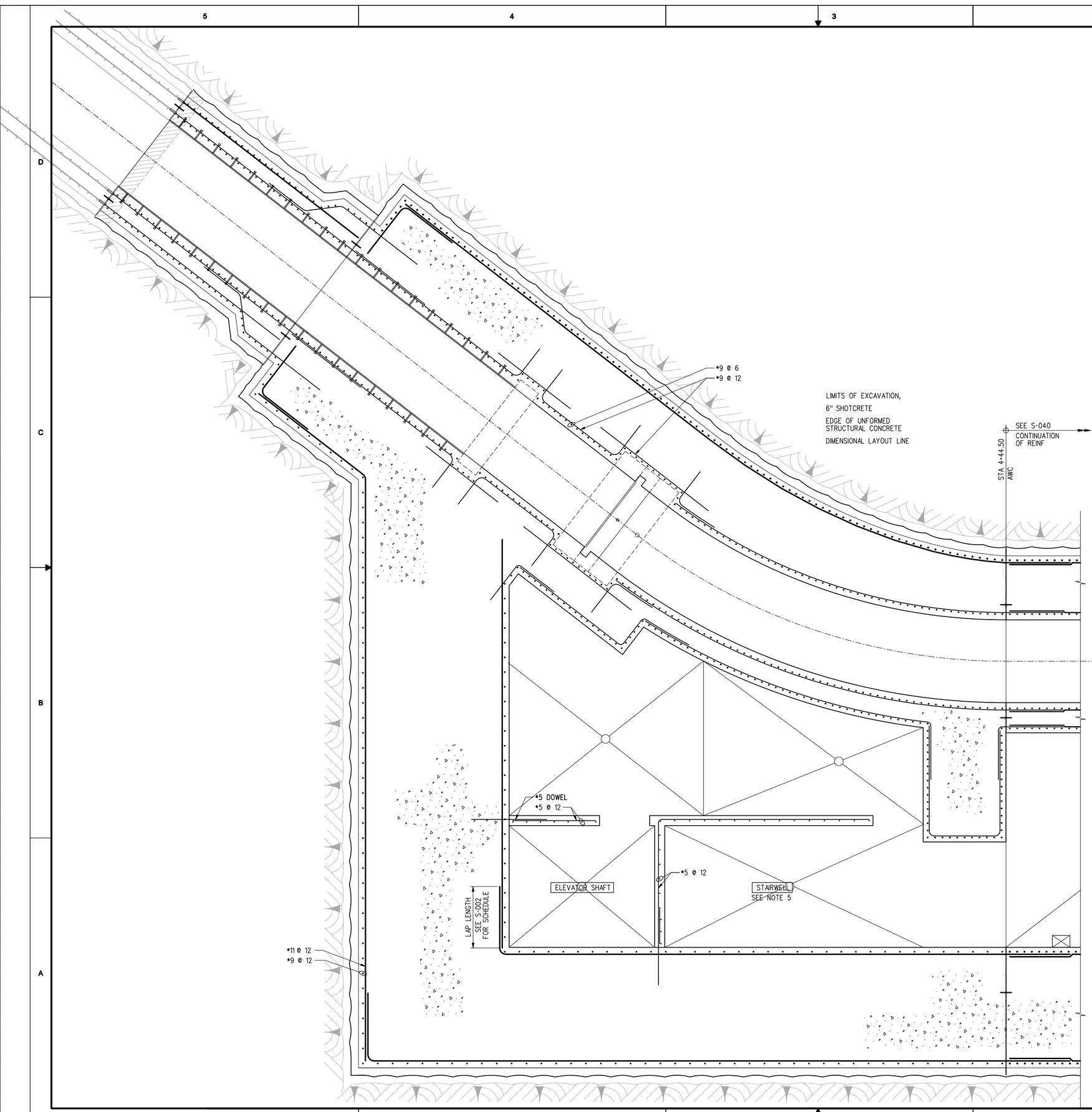

A TOWER REINFORCING
FLOOR 1 – EL 1029
3/8"=1'-0"

US Army Corps of Engineers
Seattle District

Symbol	Description	Appr.	Date
			/ /

Designed by: X	Date: 16 MAR 06
Drawn by: X	File #: E-56-14-19
Checked by: X	Rev.
Prepared by:	

U.S. ARMY ENGINEER DISTRICT, SEATTLE
CORPS OF ENGINEERS
SEATTLE, WASHINGTON

ADDITIONAL WATER STORAGE PROJECT
HOWARD HANSON DAM
TOWER REINFORCING
FLOOR 1 - EL 1029
GREEN RIVER WASHINGTON

Plate number:
S-061
Sheet of

DATE AND TIME PLOTTED: 8/6/2008 11:57:17 AM DESIGN FILE: J:\AEC\Designs\HHAW\Structural\HHAWS-1s-061.DGN

FOR CONTINUATION
SEE FISH WELL PLAN S-035

FOR CONTINUATION
SEE FISH WELL
PLANS S-035

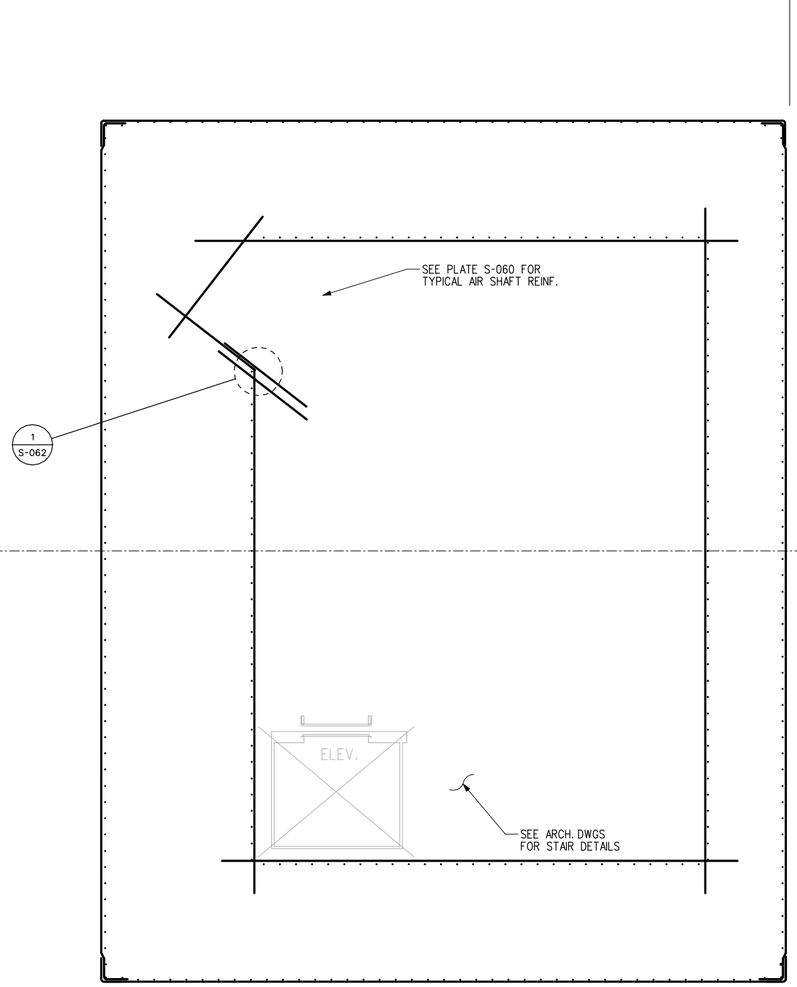

PLAN EL 1054 (1042 SIM.)

1/4"=1'-0" 0' 4' 8'

TYP. WALL REINFORCING:
VERTICAL: #10 @ 12"
HORIZONTAL: #9 @ 12"
SEE PLATE S-057 FOR TYP STAIRWELL WALL REINF.

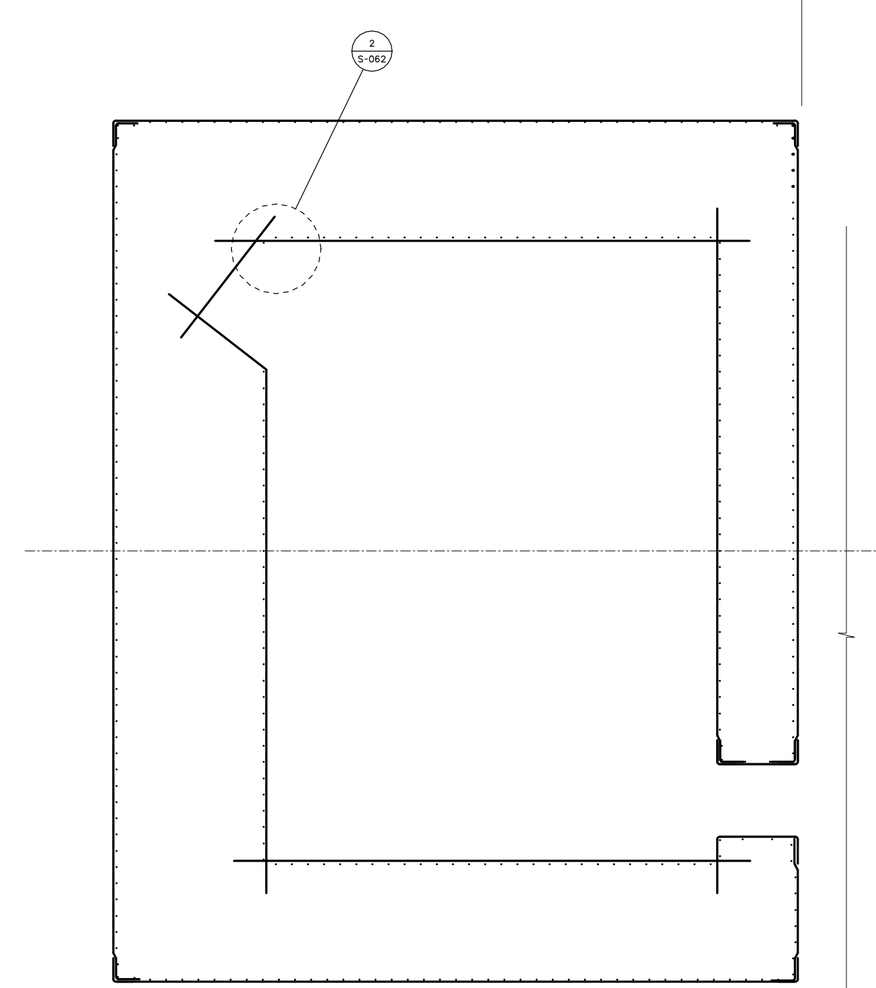

PLAN EL 1061.53 & EL 1074.13

1/4"=1'-0" 0' 4' 8'

TYP. WALL REINFORCING:
VERTICAL: #10 @ 12"
HORIZONTAL: #9 @ 12"
SEE PLATE S-057 FOR TYP STAIRWELL WALL REINF.

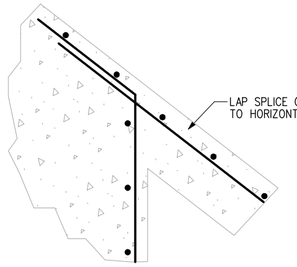

1 TYP AIR SHAFT REINFORCING

1"=1'-0" 0' 1' 2'

REINFORCEMENT: #4 @ 12 EW

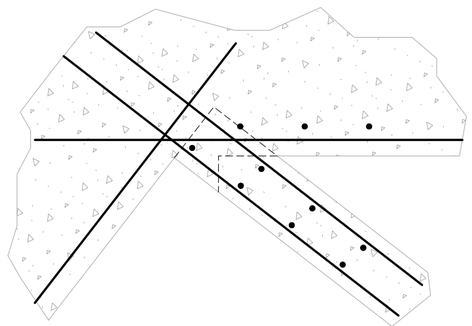

2 TYP AIR SHAFT REINFORCING

1"=1'-0" 0' 1' 2'

REINFORCEMENT: #4 @ 12 EW, EF

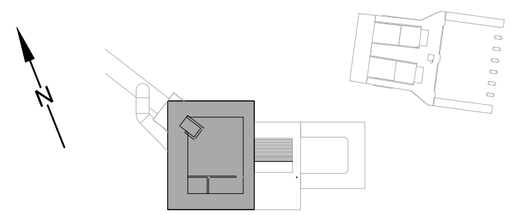

KEY PLAN

US Army Corps of Engineers
Seattle District

Description	Symbol	Appr.	Date
			/ /

Date: 16 MAR 06
File #: E-56-14-19
Rev.

Designed by: X
Drawn by: X
Checked by: X
Prepared by:

U.S.ARMY ENGINEER DISTRICT,SEATTLE
CORPS OF ENGINEERS
SEATTLE, WASHINGTON

ADDITIONAL WATER STORAGE PROJECT
HOWARD HANSON DAM
GREEN RIVER WASHINGTON

TOWER WALL REINFORCING PLANS @ ELs 1042, 1054, 1063.53 & 1074.13

Plate number:
S-062
Sheet of

DESIGN FILE: I:\AEC\Designs\HHAW\Structural\HHAWS-1s-062.DGN
DATE AND TIME PLOTTED: 8/6/2008 11:57:22 AM

FOR CONTINUATION SEE FISH WELL PLATE S-035

STA 4+44.50

A S-0xx

LIMITS OF EXCAVATION,
6" SHOTCRETE
EDGE OF UNFORMED STRUCTURAL CONCRETE
DIMENSIONAL LAYOUT LINE

UNREINFORCED CONCRETE FILL

30" DIA DRAIN PIPE SEE MECHANICAL DRAWINGS FOR DETAILS

A

℄ AWC

ELEVATOR SHAFT
EL 1029.0

STAIRWELL
SEE NOTE 5

EL 1042.0

CJ

TOWER REINFORCING FLOOR 2 – EL 1042

A 3/8"=1'-0" 0' 2' 4'

NOTES:
1. X

US Army Corps of Engineers
Seattle District

Symbol	Description	Appr.	Date
			/ /

Date: 16 MAR 06
File #: E-56-14-19
Rev.:

Designed by: X
Drawn by: X
Checked by: X

U.S.ARMY ENGINEER DISTRICT,SEATTLE
CORPS OF ENGINEERS
SEATTLE, WASHINGTON

Prepared by:

ADDITIONAL WATER STORAGE PROJECT
HOWARD HANSON DAM

TOWER PLAN EL 1042
REINFORCING PLAN

GREEN RIVER WASHINGTON

Plate number:
S-062
Sheet of

I:\AEC\Designs\HHAWS\Structural\HHAWS-ts-062.DGN
DESIGN FILE:
11:57:24 AM
DATE AND TIME PLOTTED: 8/6/2008

FOR CONTINUATION
SEE FISH WELL PLAN S-036

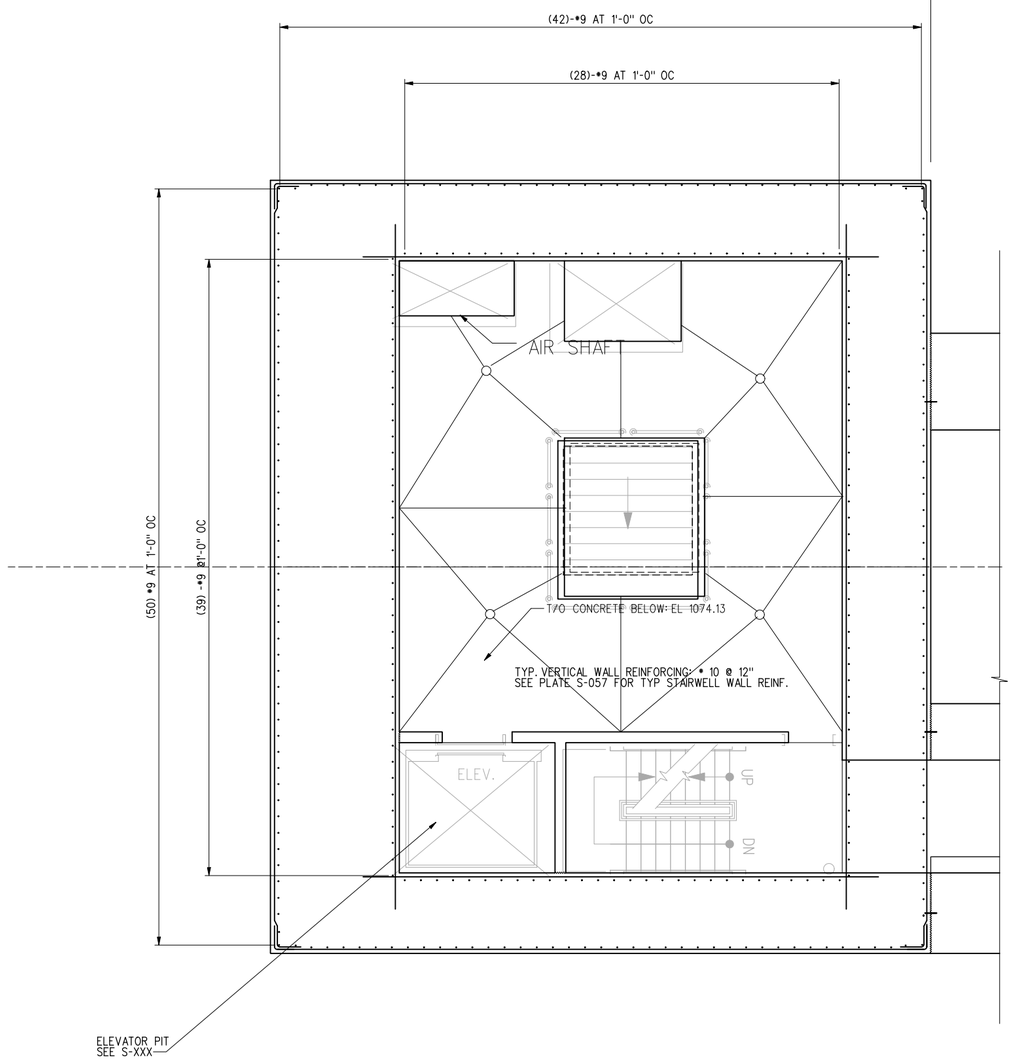

PLAN EL 1083.5
1/4"=1'-0" 0' 4' 8'

FOR CONTINUATION
SEE FISH WELL PLAN S-037

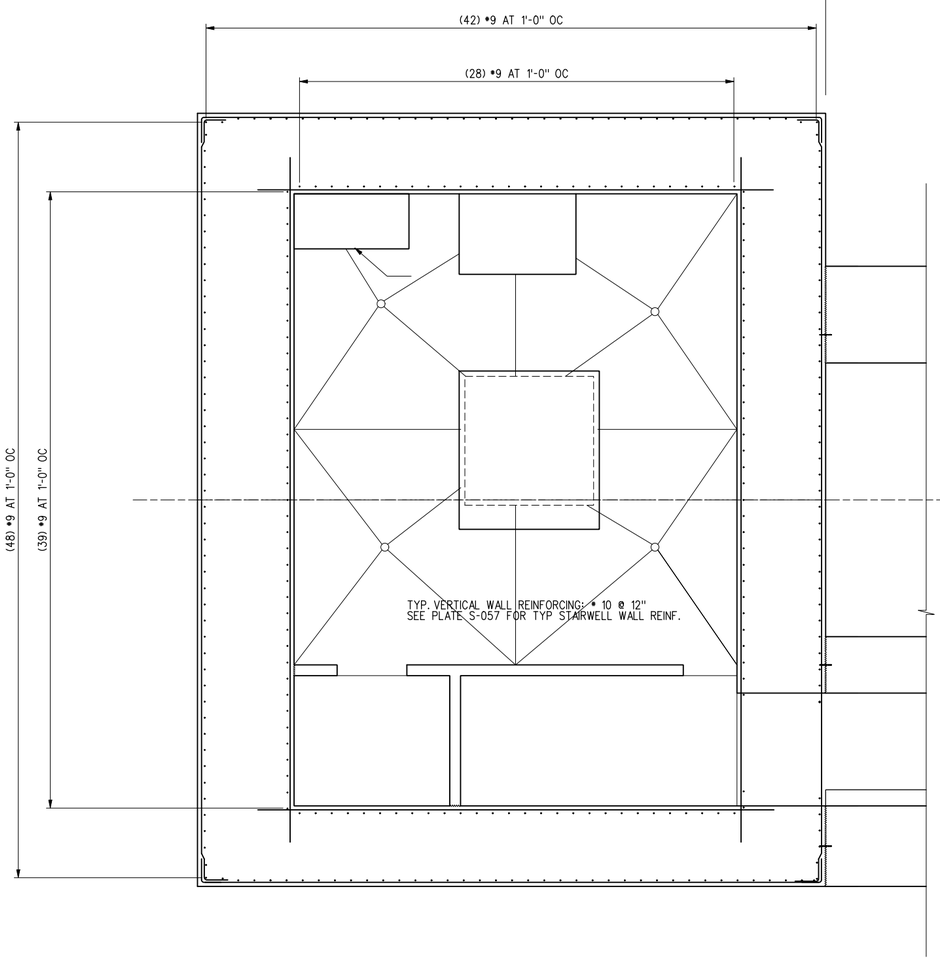

PLAN EL 1096.1 & 1118.05
1/4"=1'-0" 0' 4' 8'

US Army Corps of Engineers
Seattle District

Symbol	Description	Appr.	Date
			/ /

Date: 16 MAR 06
File •
Rev. E-56-14-19

Designed by: X
Drawn by: X
Checked by: X

U.S.ARMY ENGINEER DISTRICT,SEATTLE
CORPS OF ENGINEERS
SEATTLE, WASHINGTON

Prepared by:

ADDITIONAL WATER STORAGE PROJECT
HOWARD HANSON DAM

TOWER REINFORCING @ EL 1083.5, 1096.1 & 1118.05

GREEN RIVER WASHINGTON

Plate number:
S-063
Sheet of

DESIGN FILE: I:\AEC\Designs\HHAW\Structural\HHAWS-1s-063.DGN
DATE AND TIME PLOTTED: 8/6/2008 11:57:43 AM

FOR CONTINUATION
SEE FISH WELL PLAN EL 1135
S-XXX

FOR CONTINUATION
SEE FISH WELL
PLAN EL 1146.375
S-XXX

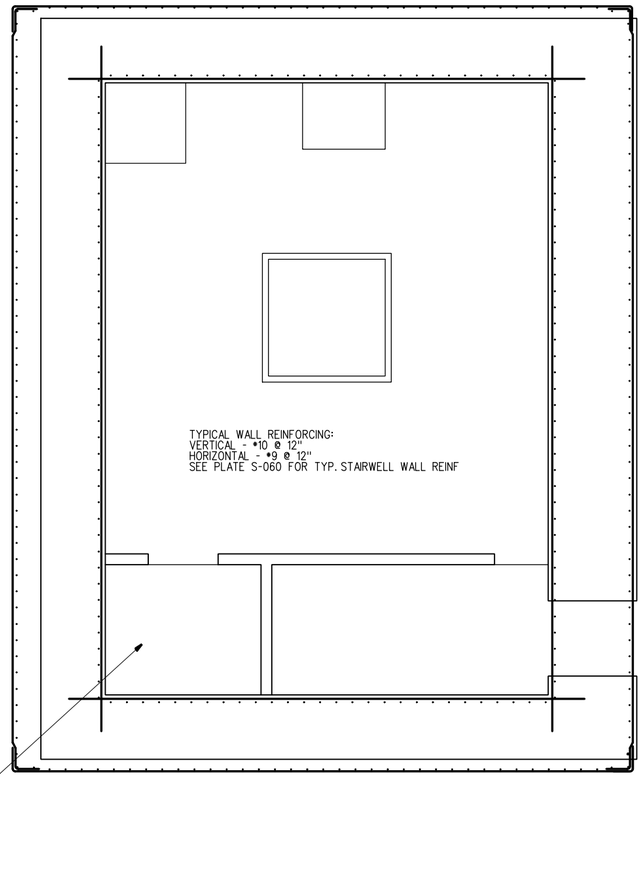

PLAN EL 1140.0 (EL 1163.38 SIM.)
1/4"=1'-0" 0' 4' 8'

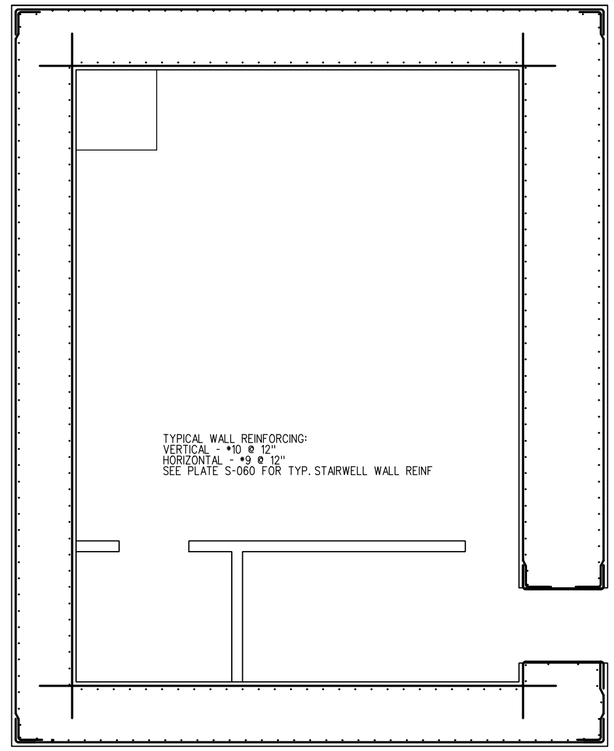

PLAN EL 1163.38
1/4"=1'-0" 0' 4' 8'

US Army Corps of Engineers
Seattle District

Symbol	Date	Appr.	Description
	/ /		

Symbol	Description

Date: 16 MAR 06
File #: E-56-14-19
Rev.

Designed by: X
Drawn by: X
Checked by: X

U.S.ARMY ENGINEER DISTRICT,SEATTLE
CORPS OF ENGINEERS
SEATTLE, WASHINGTON

Prepared by:

ADDITIONAL WATER STORAGE PROJECT
HOWARD HANSON DAM
GREEN RIVER WASHINGTON

TOWER REINFORCING @ EL 1140.0 & 1163.38

Plate number:
S-064
Sheet of

I:\AEC\Designs\HHAW\Structural\HHAWS-1s-064.DGN
DESIGN FILE:
11:57:50 AM
DATE AND TIME PLOTTED: 8/6/2008

FOR CONTINUATION
SEE FISH WELL PLAN EL 1135
S-XXX

FOR CONTINUATION
SEE FISH WELL
PLAN EL 1146.375
S-XXX

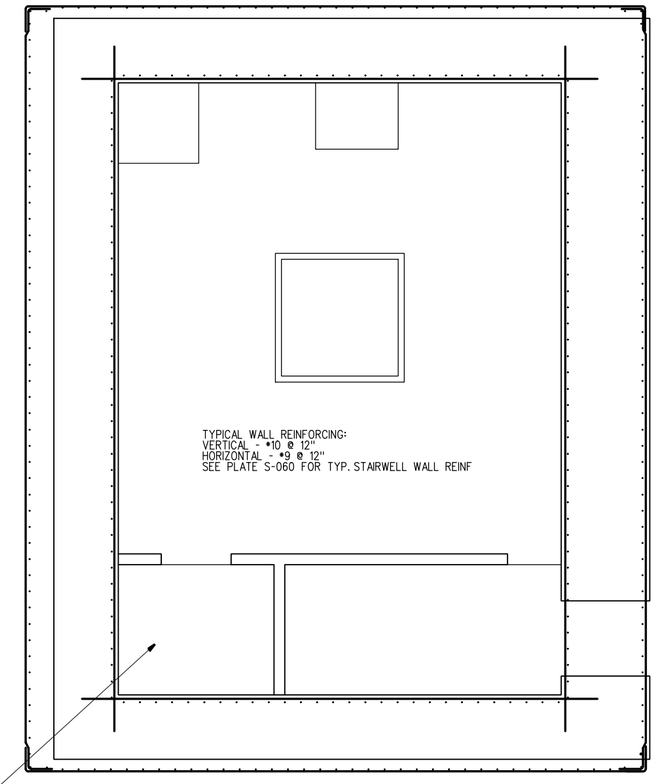

PLAN EL 1140.0 (EL 1163.38 SIM.)
1/4"=1'-0" 0' 4' 8'

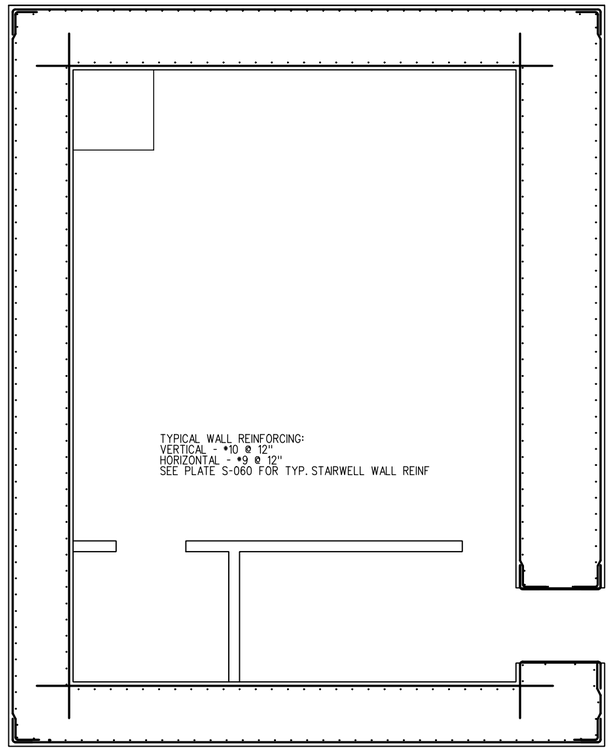

PLAN EL 1163.38
1/4"=1'-0" 0' 4' 8'

US Army Corps of Engineers
Seattle District

Symbol	Description	Appr.	Symbol	Description
		/ /	Date	

Designed by: X	Date: 16 MAR 06		
Drawn by: X	File #: E-56-14-19		
Checked by: X	Rev:		

U.S.ARMY ENGINEER DISTRICT,SEATTLE
CORPS OF ENGINEERS
SEATTLE, WASHINGTON
Prepared by:

ADDITIONAL WATER STORAGE PROJECT
HOWARD HANSON DAM
GREEN RIVER WASHINGTON

TOWER REINFORCING @ EL 1140.0 & 1163.38

Plate number:
S-064
Sheet of

DESIGN FILE: I:\AEC\Designs\HHAW\Structural\HHAWS-ts-064.DGN
DATE AND TIME PLOTTED: 8/6/2008 11:57:51 AM

NOTES:

1. SEE SHEET S-070 FOR TYPICAL SLAB PENETRATION DETAILS FOR THE UTILITY CHASE AND TOWER GRATING
2. FOR REINFORCING, SEE PLATE NO. S-0xx
3. SEE ARCHITECTURAL DRAWINGS FOR STAIR DETAILS.
4. FISH MONITORING FACILITY AND EQUIPMENT NOT SHOWN. SEE PLATE NO. SM-01 THRU SM-XX FOR PLAN AND DETAILS.

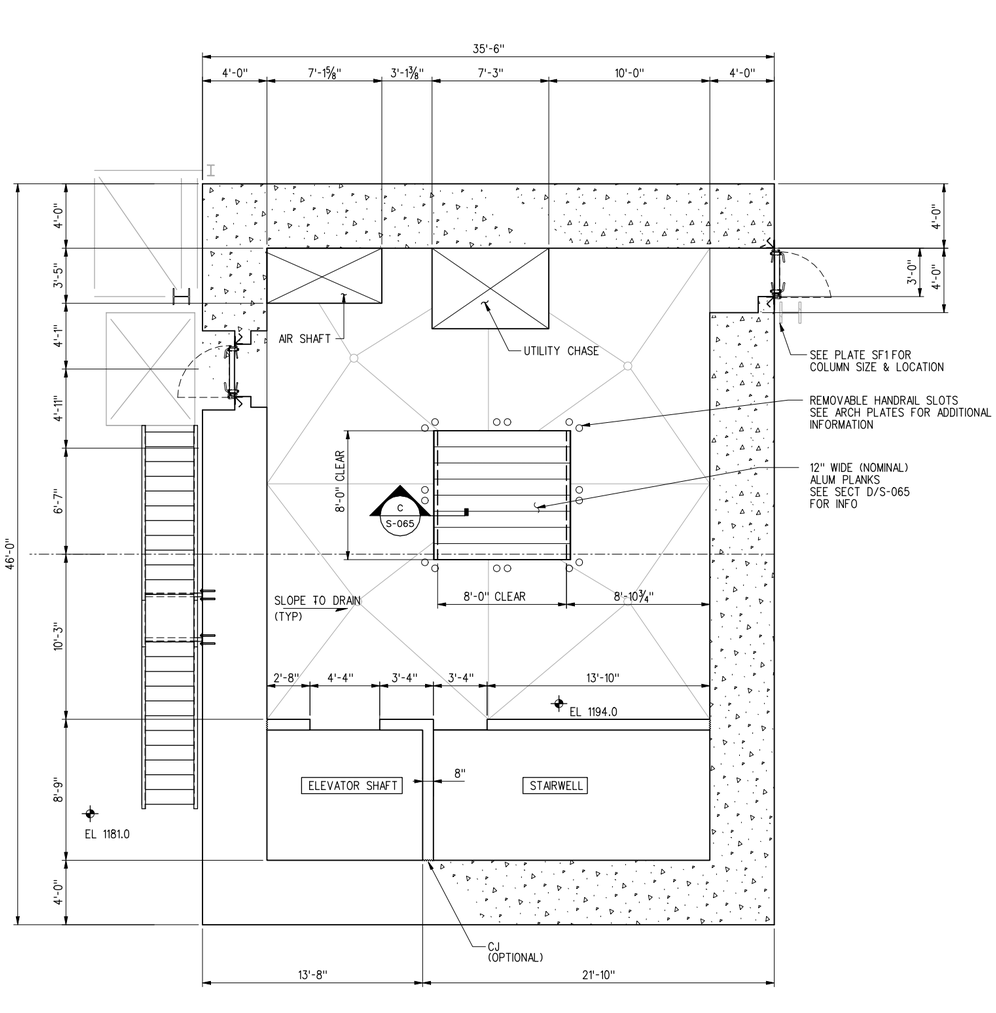

PLAN FLOOR 11
EL 1194

A 1/4"=1'-0"

NOTE: PROVIDE NON-SLIP RUBBER SPILLAGE MAT OVER PLANKING

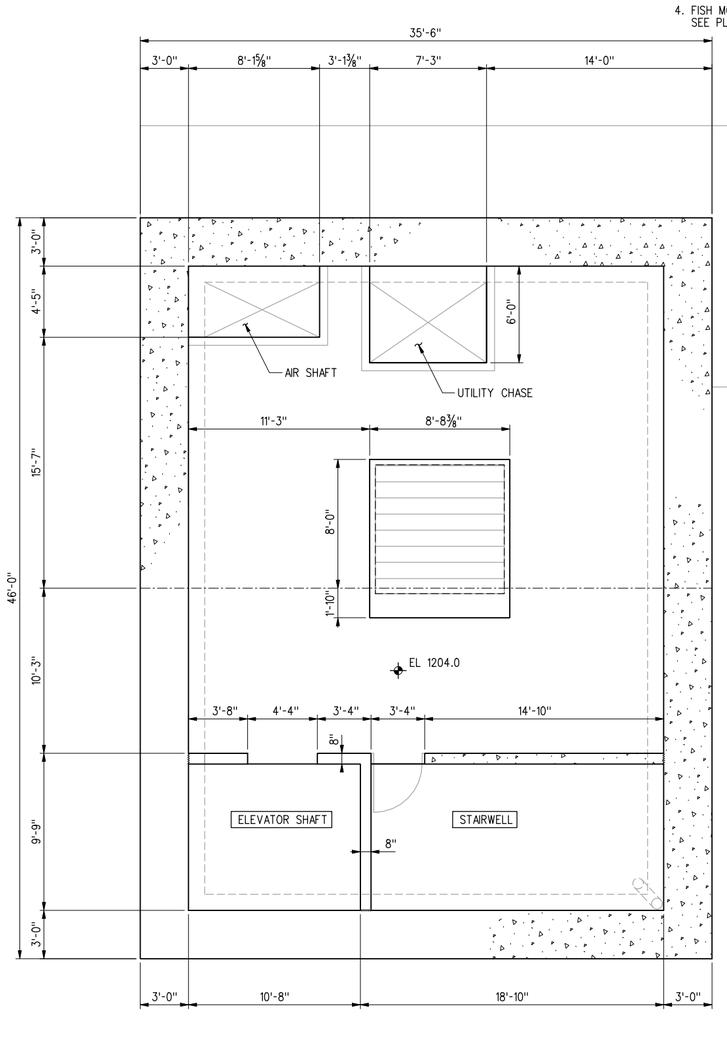

PLAN FLOOR 12
EL 1204

B 1/4"=1'-0"

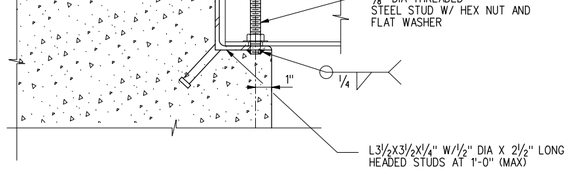

SECTION

C 3"=1'-0"

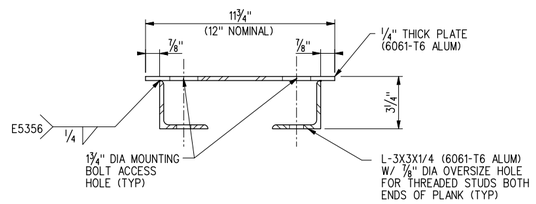

REMOVABLE ALUMINUM PLANK SECTION

D 3"=1'-0"

US Army Corps of Engineers
Seattle District

Description	Appr.	Symbol
	/ /	

Designed by:
Drawn by:
Checked by:
Date: 16 MAR 06
File #: E-56-14-19
Rev.

U.S. ARMY ENGINEER DISTRICT, SEATTLE
CORPS OF ENGINEERS
SEATTLE, WASHINGTON
Prepared by:

ADDITIONAL WATER STORAGE PROJECT
HOWARD HANSON DAM
GREEN RIVER WASHINGTON

TOWER PLAN @ FLOOR 11 & 12

Plate number:
S-065
Sheet of

DESIGN FILE: I:\AEC\Designs\HHAW\Structural\HHAWS_ts-065.DGN
DATE AND TIME PLOTTED: 8/6/2008 11:57:53 AM

NOTES:

1. SEE SHEET S-070 FOR TYPICAL SLAB PENETRATION DETAILS FOR THE UTILITY CHASE AND TOWER GRATING
2. FOR REINFORCING, SEE PLATE NO. S-0xx
3. SEE ARCHITECTURAL DRAWINGS FOR STAIR DETAILS.

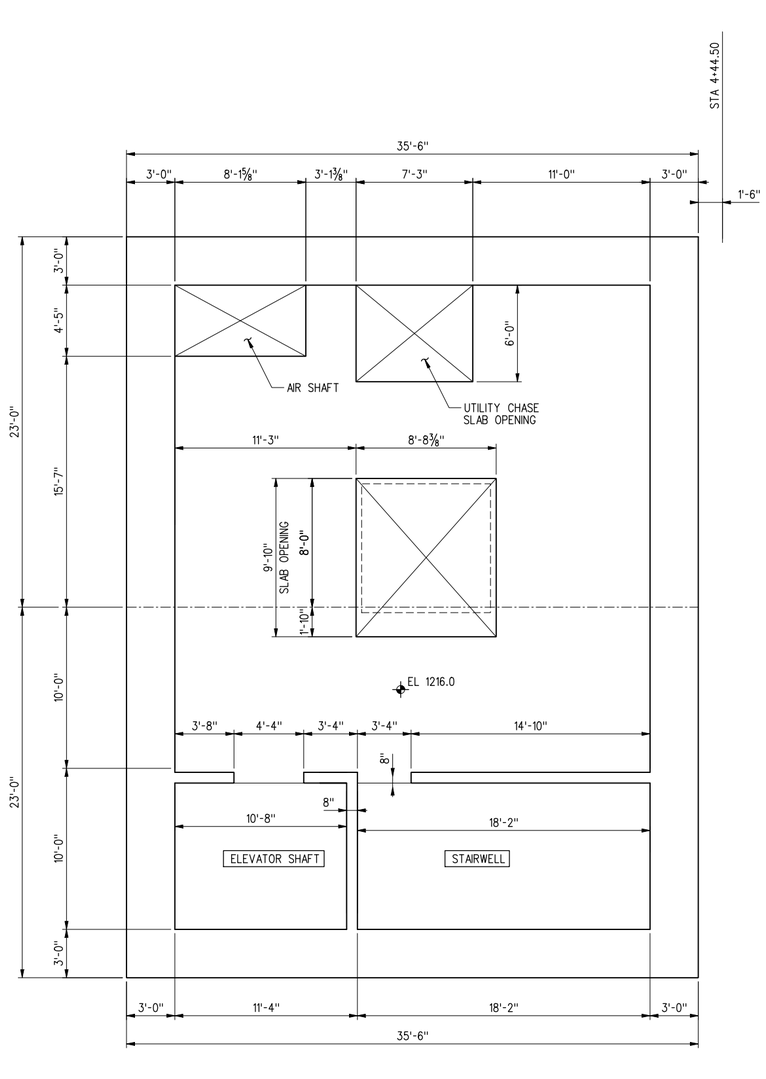

PLAN FLOOR 13
EL 1216.0

A 1/4"=1'-0" 0' 4' 8'

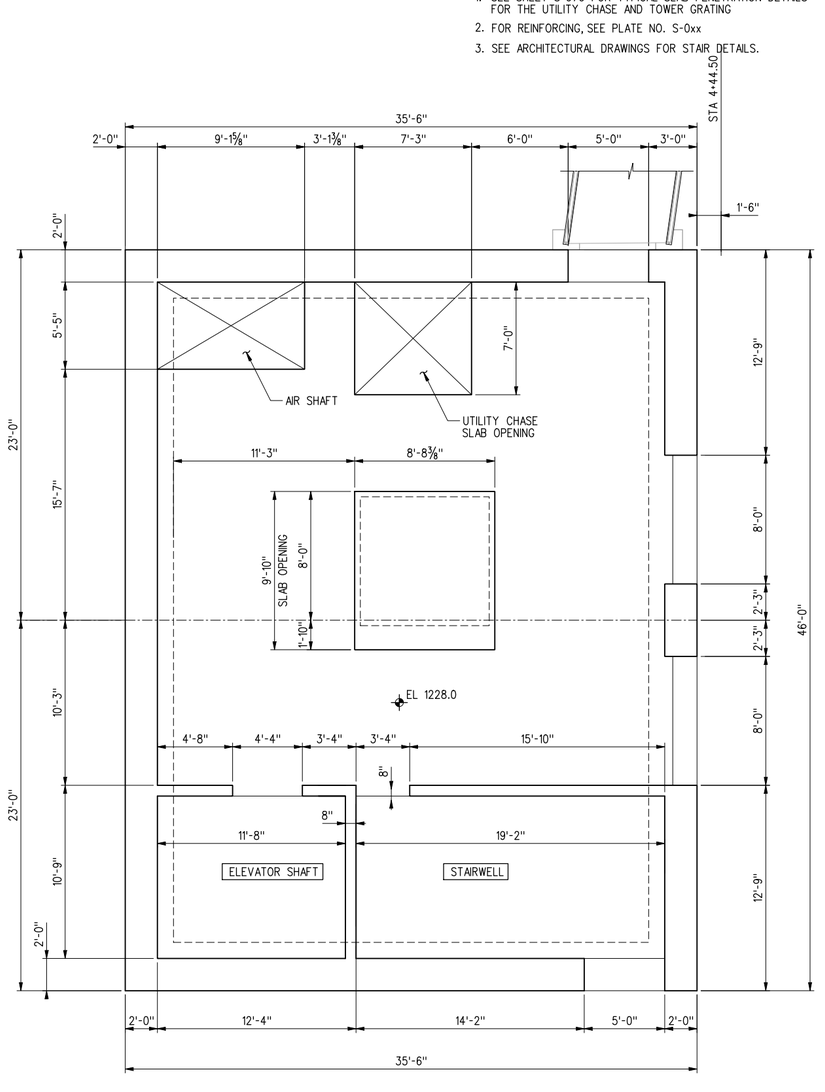

PLAN FLOOR 14
EL 1228.0

B 1/4"=1'-0" 0' 4' 8'

US Army Corps of Engineers
Seattle District

Symbol	Description
Symbol	Appr.
	Date
	Description
	Symbol

Designed by:
Drawn by:
Checked by:
Prepared by:

Date: 16 MAR 06
File #: E-56-14-19
Rev.

U.S.ARMY ENGINEER DISTRICT,SEATTLE
CORPS OF ENGINEERS
SEATTLE, WASHINGTON

ADDITIONAL WATER STORAGE PROJECT
HOWARD HANSON DAM

TOWER PLANS
EL 1216.0 & 1228.0

GREEN RIVER WASHINGTON

Plate number:
S-066
Sheet of

I:\AECDesigns\HHAW\Structural\HHAWS_1s-066.DGN
DESIGN FILE:
11:58:06 AM
DATE AND TIME PLOTTED: 8/6/2008

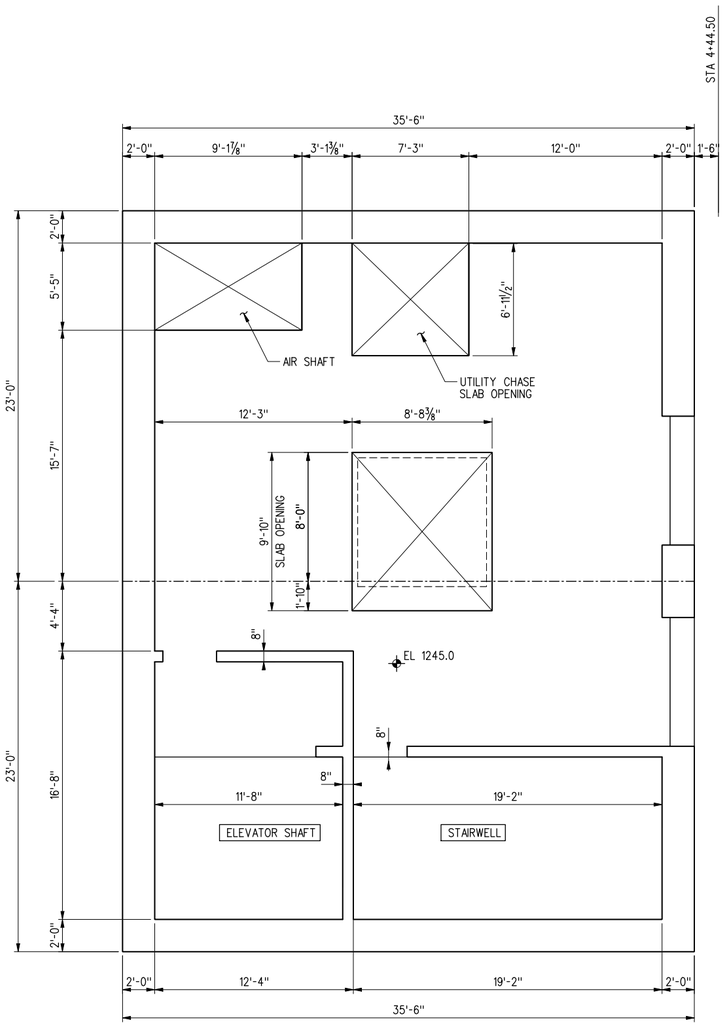

A PLAN FLOOR 15
EL 1245.0
1/4"=1'-0" 0' 4' 8'

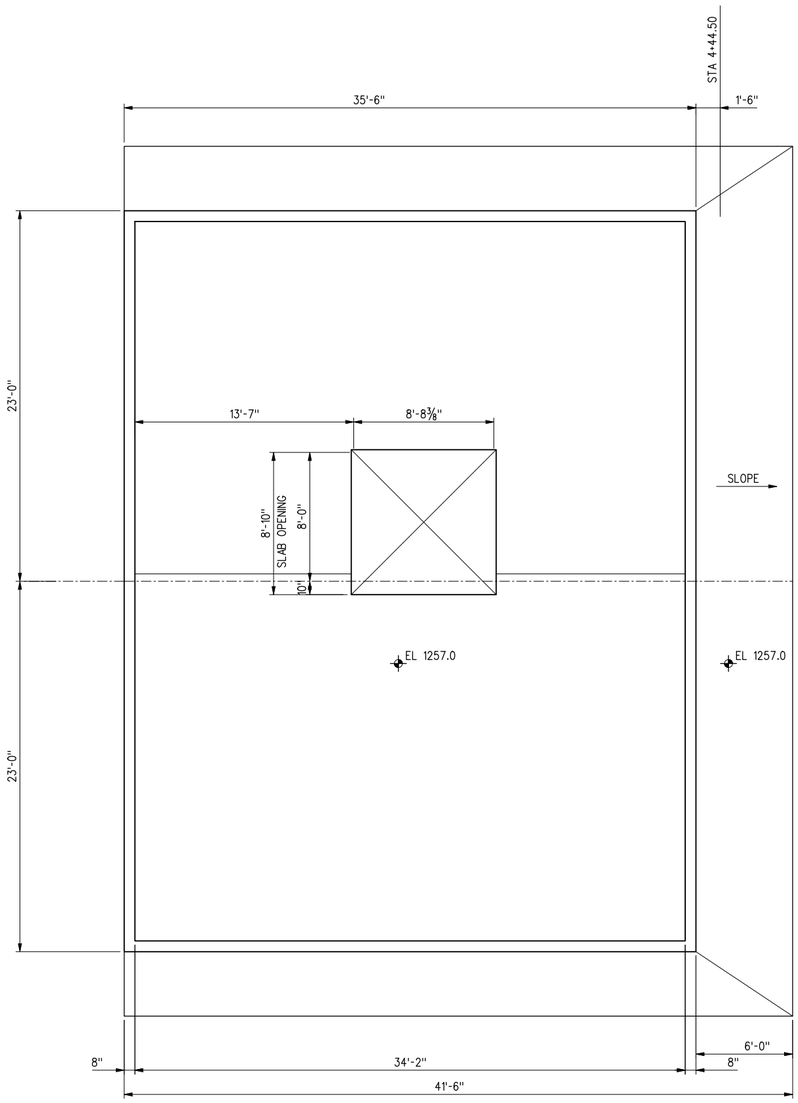

B ROOF PLAN
EL 1257.0
1/4"=1'-0" 0' 4' 8'

NOTES:

1. SEE SHEET S-070 FOR TYPICAL SLAB PENETRATION DETAILS FOR THE UTILITY CHASE AND TOWER GRATING
2. FOR REINFORCING, SEE PLATE NO. S-0xx
3. SEE ARCHITECTURAL DRAWINGS FOR STAIR DETAILS.

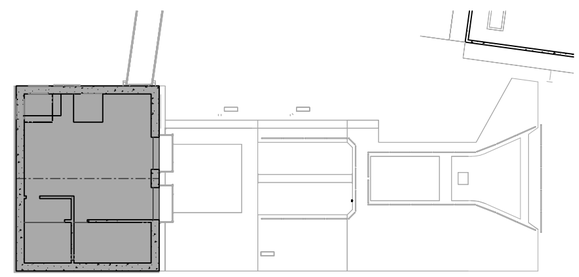

KEY PLAN

US Army Corps of Engineers
Seattle District

Symbol	Description	Appr.	Date
			/ /

Designed by:	Date: 16 MAR 06
Drawn by:	File # E-56-14-19
Checked by:	Rev.
Prepared by:	

U.S.ARMY ENGINEER DISTRICT,SEATTLE
CORPS OF ENGINEERS
SEATTLE, WASHINGTON

ADDITIONAL WATER STORAGE PROJECT
HOWARD HANSON DAM
GREEN RIVER

TOWER PLANS
EL 1XXX.0 & ROOF PLAN

WASHINGTON

Plate number:
S-067
Sheet of

FILE: I:\AECDesigns\HHAW\Structural\HHAWS_ts-067.DGN
DESIGN FILE:
DATE AND TIME PLOTTED: 8/6/2008 11:58:16 AM

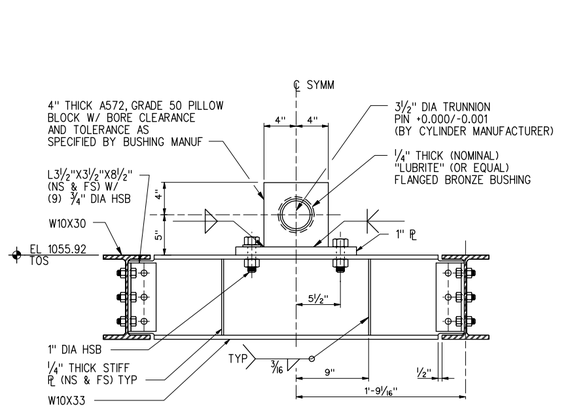

RADIAL GATE CYLINDER TRUNNION MOUNTING DETAIL

(A) 1½"=1'-0" 0" 8" 16"

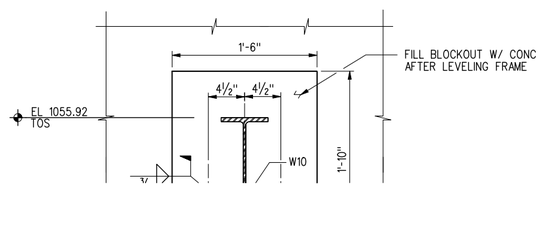

US Army Corps of Engineers
Seattle District

Symbol	Description	Appr.	Date
			/ /

Designed by: X	Date: 16 MAR 06		
Drawn by: X	File #: E-56-14-19		
Checked by: X	Rev.		

U.S.ARMY ENGINEER DISTRICT,SEATTLE
CORPS OF ENGINEERS
SEATTLE, WASHINGTON
Prepared by:

ADDITIONAL WATER STORAGE PROJECT
HOWARD HANSON DAM
RADIAL GATE CYLINDER ENCLOSURE DETAILS
GREEN RIVER WASHINGTON

Plate number:
S-061
Sheet of

FILE: I:\AEC\Designs\HHAW\Structural\HHAWS-1s-068.DGN
DATE AND TIME PLOTTED: 8/6/2008 11:58:29 AM
DESIGN FILE:

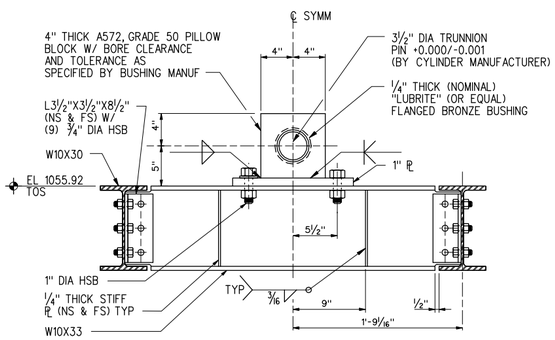

RADIAL GATE CYLINDER TRUNNION MOUNTING DETAIL

(A) 1½"=1'-0" 0" 8" 16"

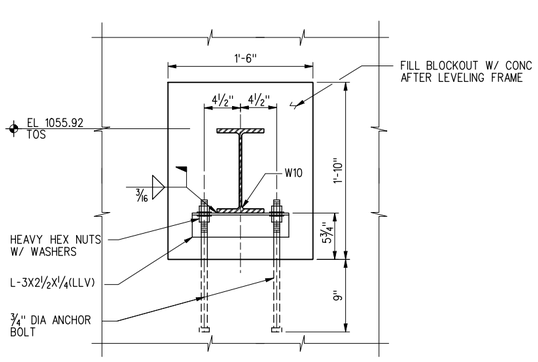

TYPICAL SECTION AT BLOCKOUT

(B) 1½"=1'-0" 0" 8" 16"

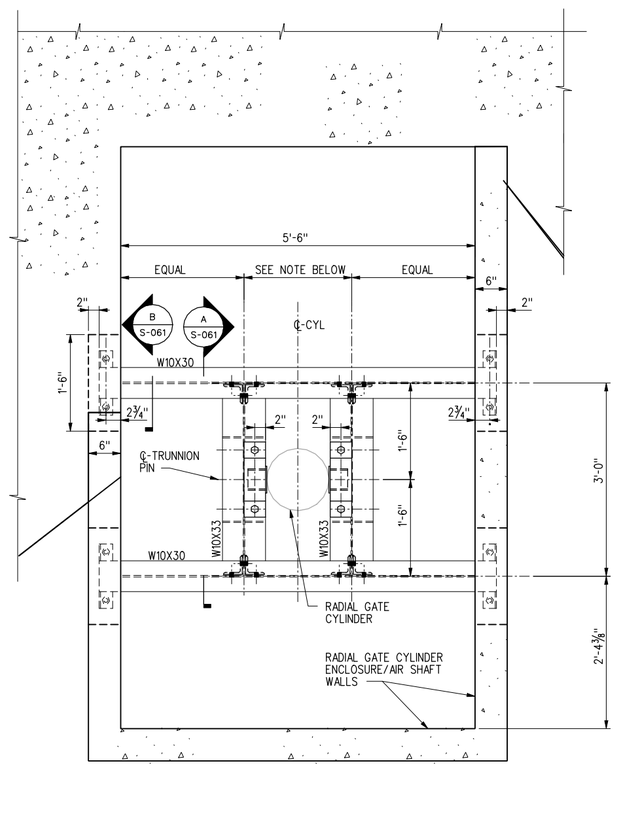

RADIAL GATE CYLINDER TRUNNION SUPPORT FRAMING PLAN

1"=1'-0" 0' 1' 2'

** THE CONTRACTOR SHALL COORDINATE DIMENSION REQUIRED WITH CYLINDER MANUFACTURER AND STEEL FABRICATOR.

US Army Corps of Engineers
Seattle District

Symbol	Description	Appr.	Date
			/ /

Date: 16 MAR 06
File #: E-56-14-19
Rev.

Designed by: X
Drawn by: X
Checked by: X

U.S.ARMY ENGINEER DISTRICT,SEATTLE
CORPS OF ENGINEERS
SEATTLE, WASHINGTON

Prepared by:

ADDITIONAL WATER STORAGE PROJECT
HOWARD HANSON DAM

RADIAL GATE CYLINDER SUPPORT DETAILS

GREEN RIVER WASHINGTON

Plate number:
S-068
Sheet of

I:\AECDesigns\HHAW\Structural\HHAWS-1s-068.DGN
DESIGN FILE:
11:58:30 AM
DATE AND TIME PLOTTED: 8/6/2008

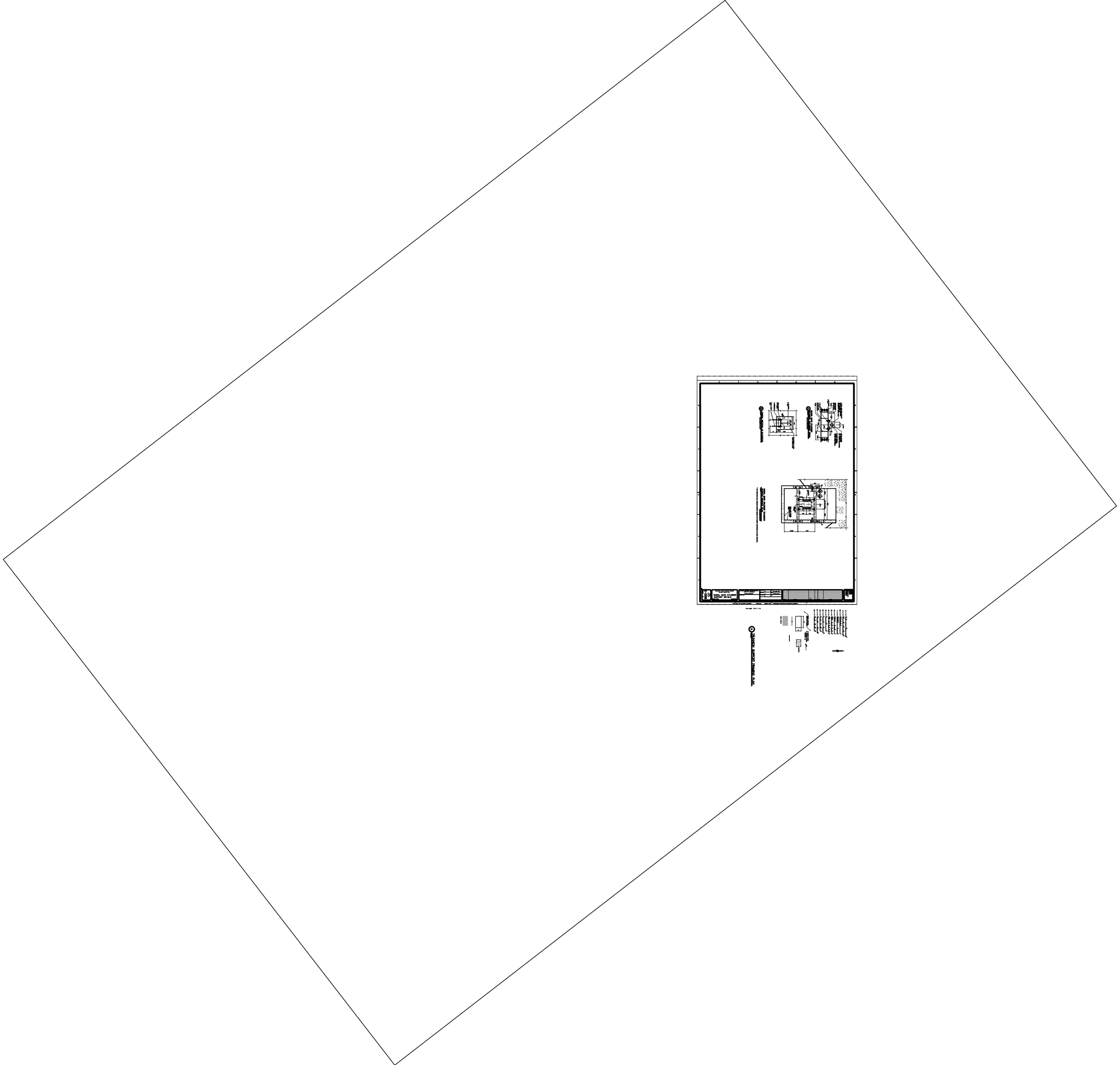

NOTES:

1. TOWER WALL THICKNESS AT EL 1208.0 = 3'-0"
   TOWER WALL THICKNESS AT EL 1198.0 = 4'-0"
   TOWER WALL THICKNESS AT EL 1181.0 = 4'-0"
   TOWER WALL THICKNESS AT EL 1163.38 = 4'-0"

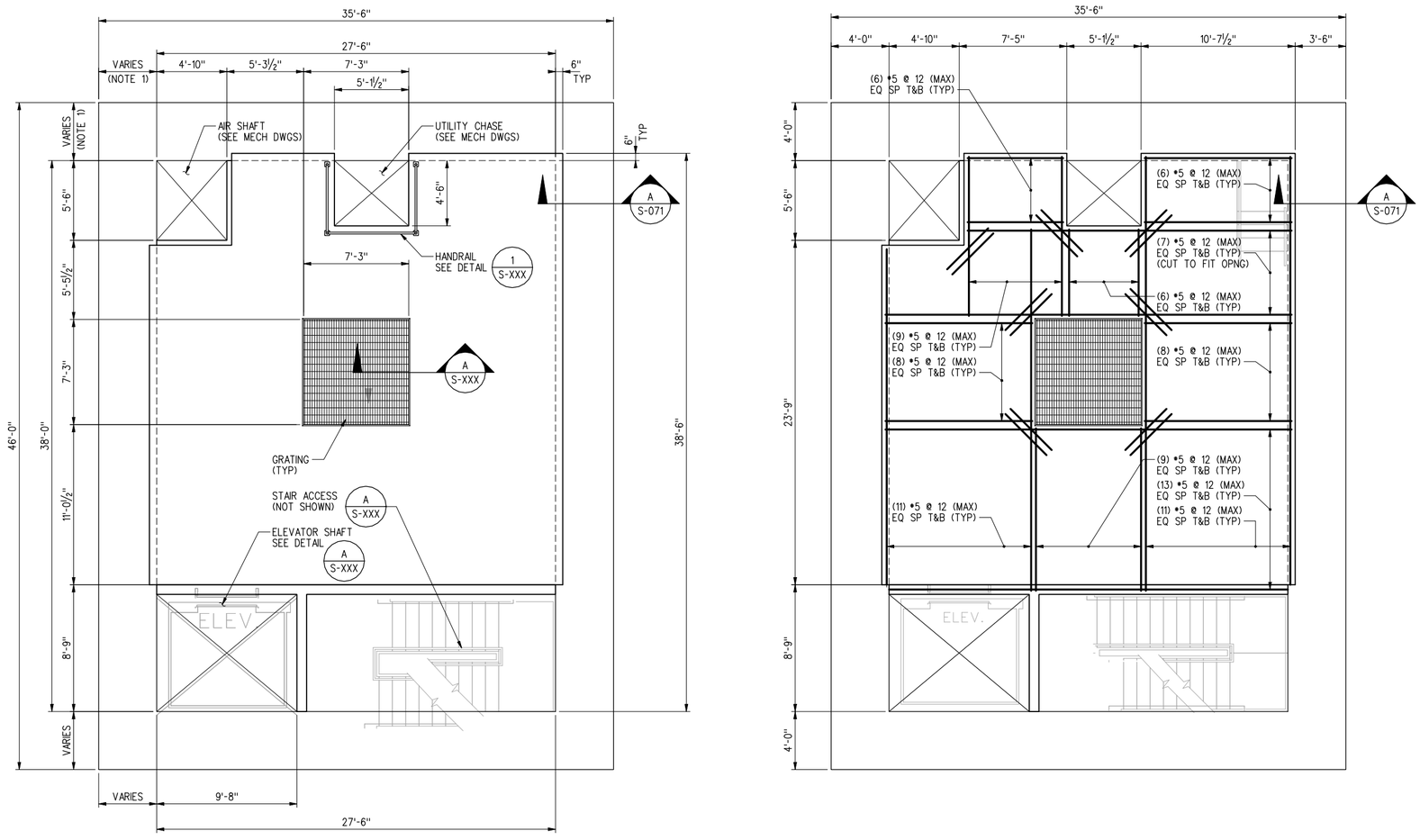

1 SLAB PLANS AT EL 1204.0, 1194.0, 1181.0, 1163.38
1/4"=1'-0"

US Army Corps of Engineers
Seattle District

Symbol	Description	Date	Appr.	Symbol	Description
		/ /			

Designed by:
Drawn by:
Checked by:
Date: 16 MAR 06
File #: E-56-14-19
Rev.

U.S.ARMY ENGINEER DISTRICT,SEATTLE
CORPS OF ENGINEERS
SEATTLE, WASHINGTON
Prepared by:

ADDITIONAL WATER STORAGE PROJECT
HOWARD HANSON DAM
TOWER REINFORCING
SLAB PLANS
GREEN RIVER WASHINGTON

Plate number:
S-070
Sheet of

DATE AND TIME PLOTTED: 8/6/2008 11:58:34 AM DESIGN FILE: I:\AECDesigns\HHAW\Structural\HHAWS-1s-070.DGN

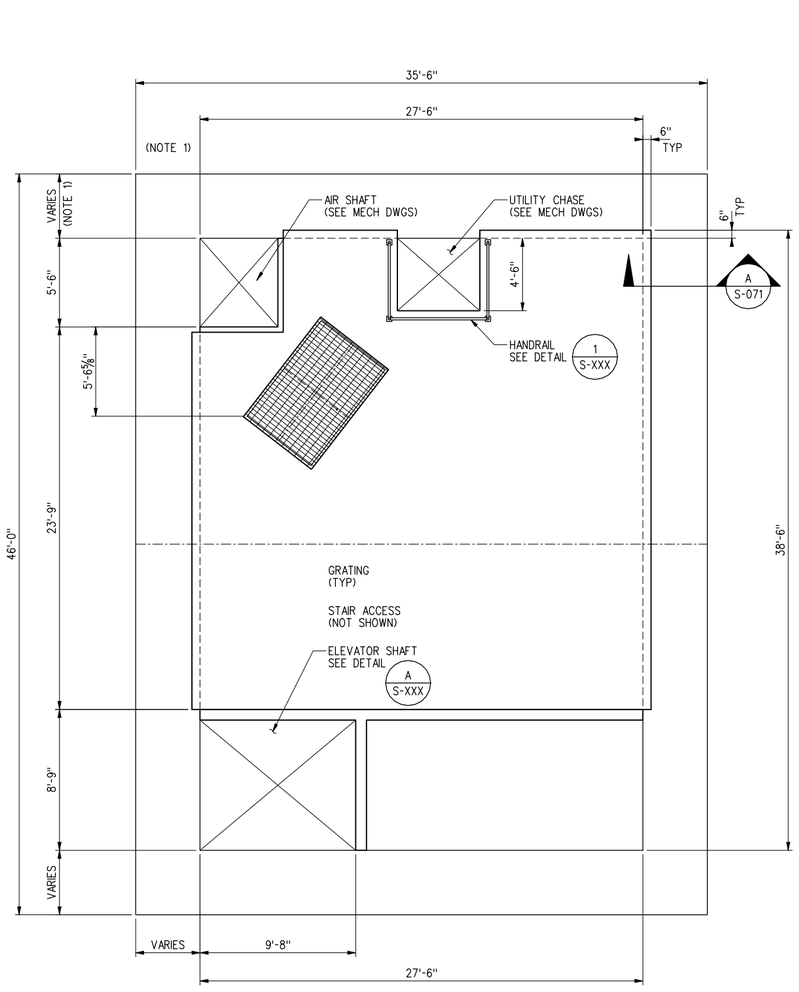

1 SLAB PLANS AT EL 1204.0, 1194.0, 1181.0, 1163.38
1/4"=1'-0"

US Army Corps of Engineers
Seattle District

Symbol	Description	Date
Appr.		/ /

Designed by:
Drawn by:
Checked by:
Prepared by:
Date: 16 MAR 06
File # E-56-14-19
Rev.

U.S.ARMY ENGINEER DISTRICT,SEATTLE
CORPS OF ENGINEERS
SEATTLE, WASHINGTON

ADDITIONAL WATER STORAGE PROJECT
HOWARD HANSON DAM
TOWER REINFORCING
SLAB PLANS
GREEN RIVER WASHINGTON

Plate number:
S-070
Sheet of

DESIGN FILE: F:\AECDesigns\HHAW\Structural\HHAWS-1s-070.DGN
DATE AND TIME PLOTTED: 8/6/2008 11:58:35 AM

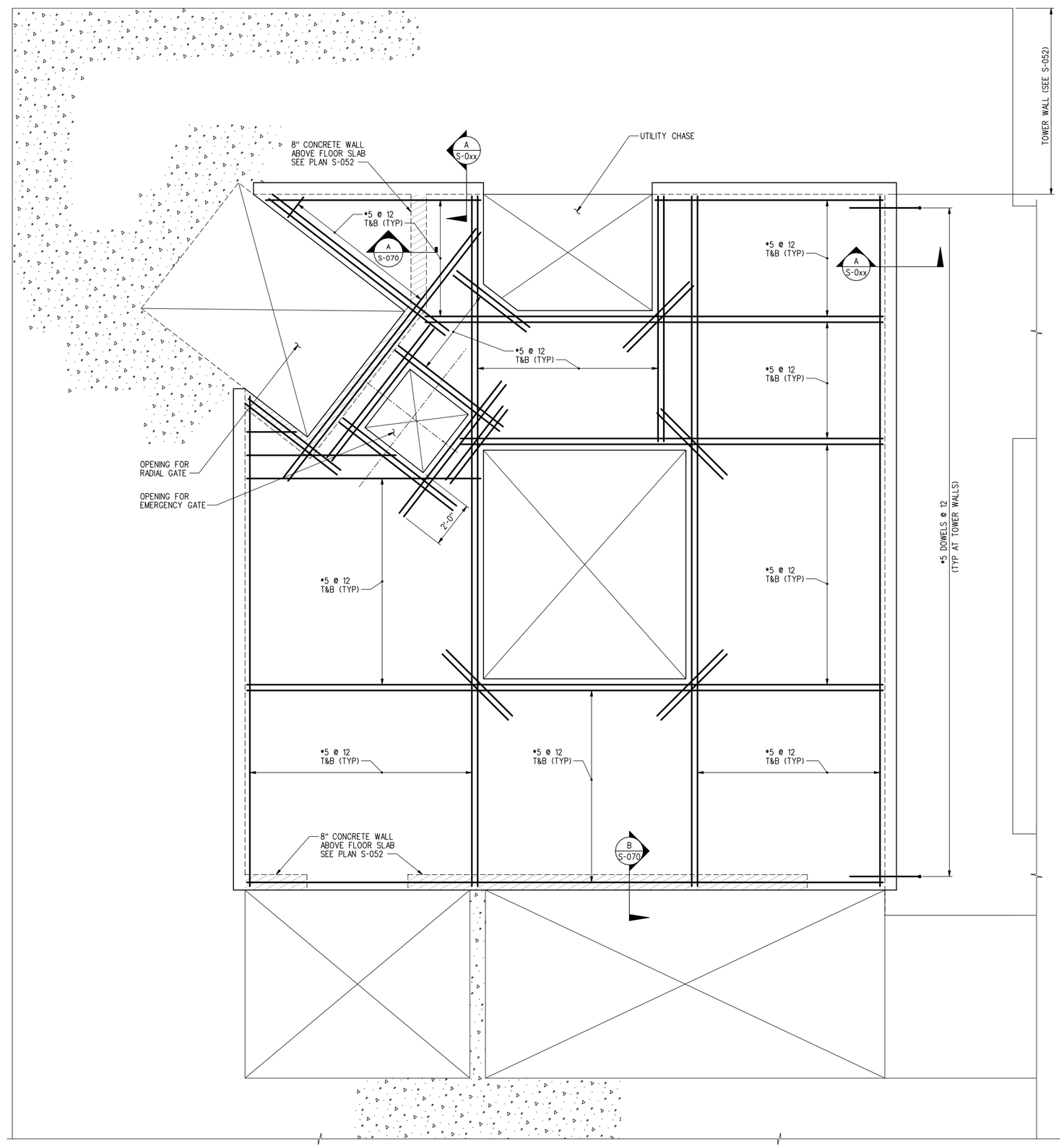

SLAB PLAN FLOOR 4
1/2"=1'-0"

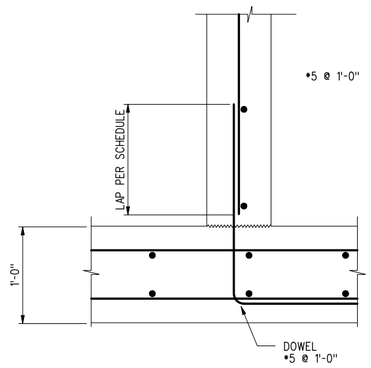

A SECTION
SCALE: 1½"=1'-0"

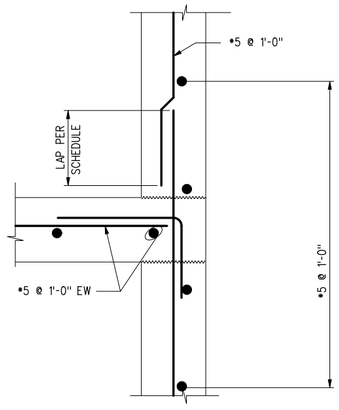

B SECTION
SCALE: 1½"=1'-0"

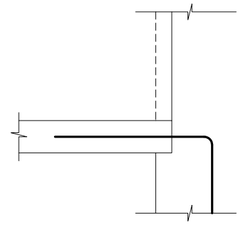

C SECTION
SCALE: 1½"=1'-0"

US Army Corps of Engineers
Seattle District

Symbol	Description	Date	Appr.	Symbol	Description
		/ /			

Designed by:
Drawn by:
Checked by:
Date: 16 MAR 06
File # E-56-14-19
Rev.

U.S.ARMY ENGINEER DISTRICT,SEATTLE
CORPS OF ENGINEERS
SEATTLE, WASHINGTON
Prepared by:

ADDITIONAL WATER STORAGE PROJECT
HOWARD HANSON DAM
TOWER REINFORCING
SLAB PLAN EL 1061
GREEN RIVER WASHINGTON

Plate number:
S-070
Sheet of

DATE AND TIME PLOTTED: 8/6/2008 11:58:37 AM DESIGN FILE: I:\AECDesigns\HHAW\Structural\HHAWS-1s-070.DGN

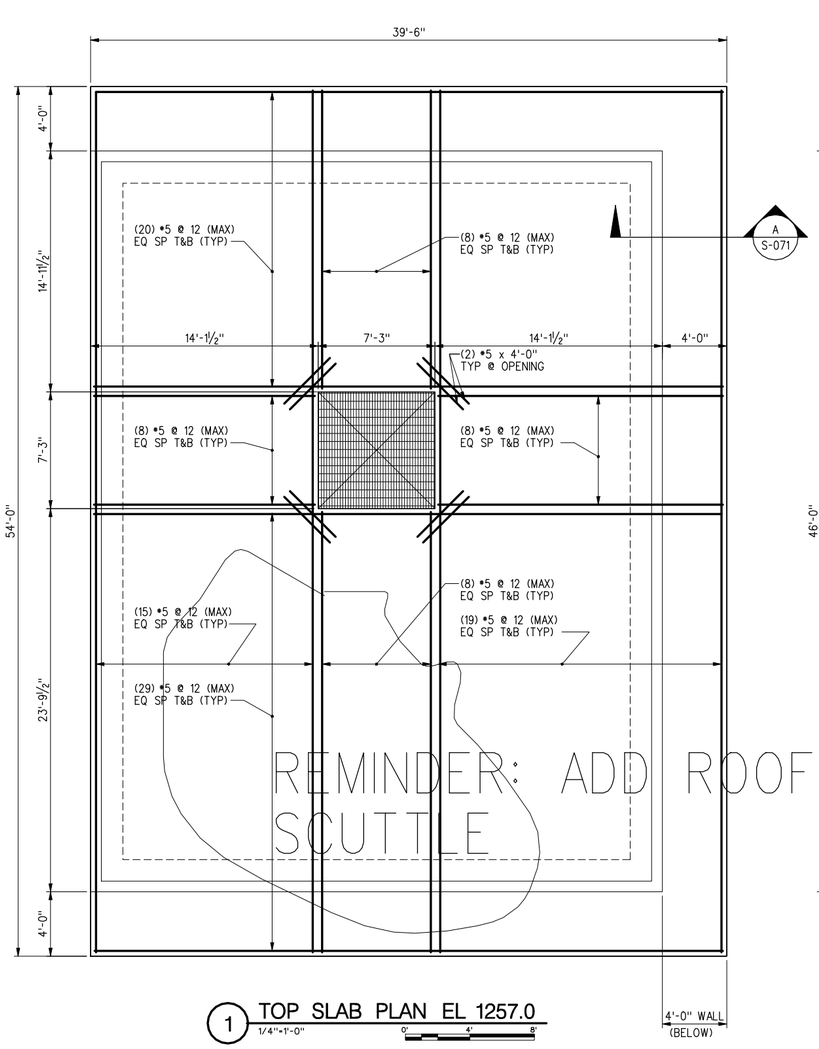

1 TOP SLAB PLAN EL 1257.0
1/4"=1'-0"

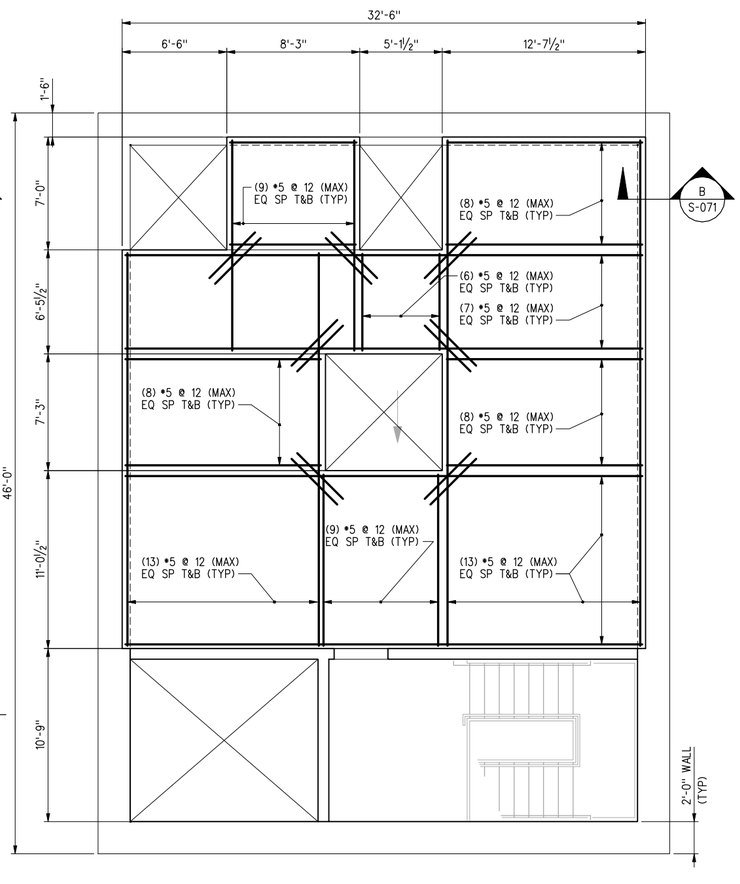

2 SLAB PLAN EL 1240.0
1/4"=1'-0"

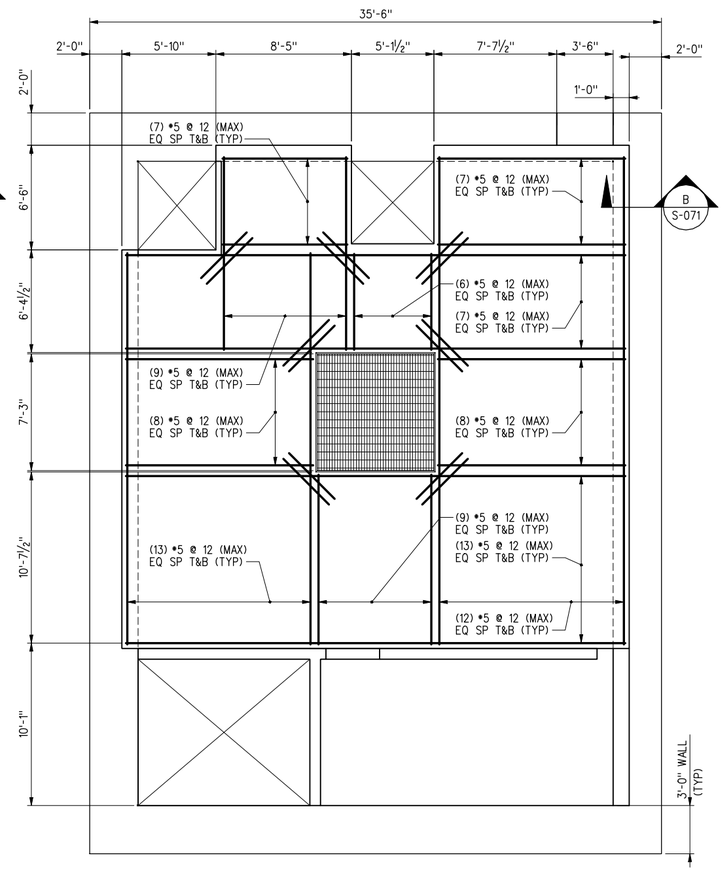

3 SLAB PLANS EL 1228.0, 1216.0
1/4"=1'-0"

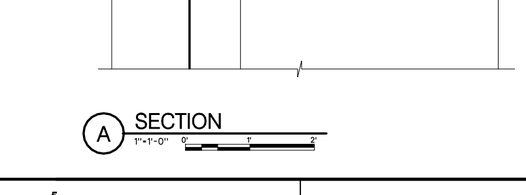

A SECTION
1"=1'-0"

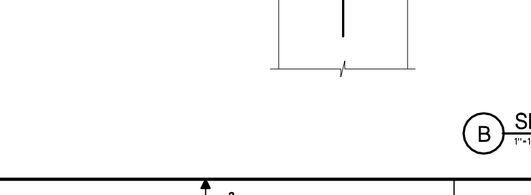

B SECTION
1"=1'-0"

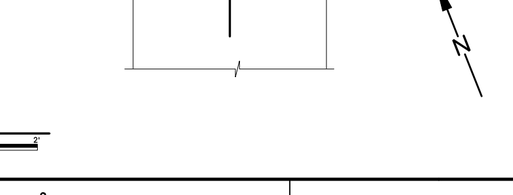

US Army Corps of Engineers
Seattle District

Symbol	Description
Appr.	
Date	/ /

Date:	16 MAR 06
File #	E-56-14-19
Rev.	
Designed by:	
Drawn by:	
Checked by:	
Prepared by:	

U.S.ARMY ENGINEER DISTRICT,SEATTLE
CORPS OF ENGINEERS
SEATTLE, WASHINGTON

ADDITIONAL WATER STORAGE PROJECT
HOWARD HANSON DAM
GREEN RIVER WASHINGTON

TOWER REINFORCING SLAB PLANS

Plate number: S-071
Sheet of

DESIGN FILE: F:\AECDesigns\HHAW\Structural\HHAWS_ts-071.DGN
DATE AND TIME PLOTTED: 8/6/2008 11:58:41 AM

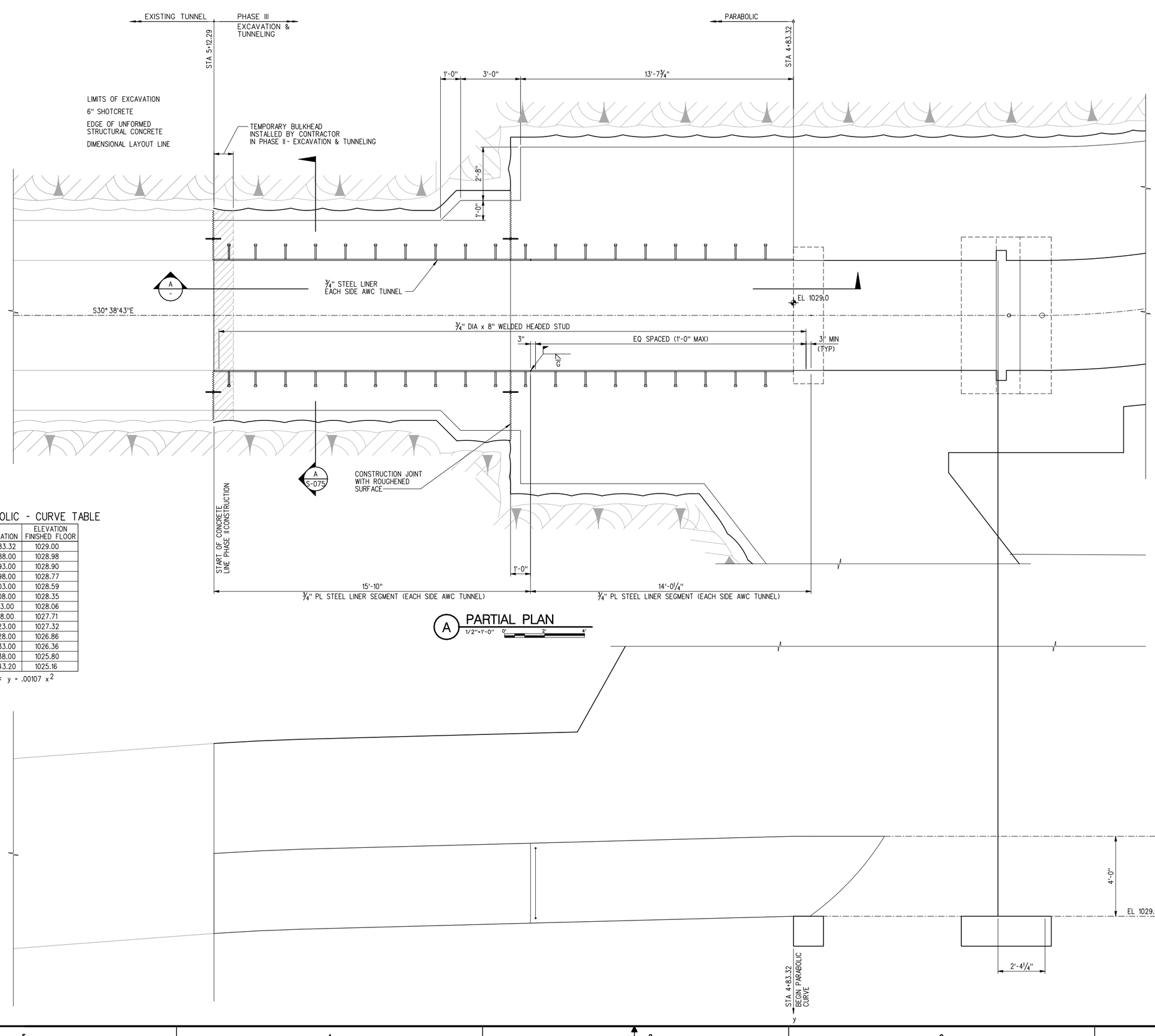

PARABOLIC - CURVE TABLE

AWC STATION	ELEVATION FINISHED FLOOR
STA 4+83.32	1029.00
STA 4+88.00	1028.98
STA 4+93.00	1028.90
STA 4+98.00	1028.77
STA 5+03.00	1028.59
STA 5+08.00	1028.35
STA 5+13.00	1028.06
STA 5+18.00	1027.71
STA 5+23.00	1027.32
STA 5+28.00	1026.86
STA 5+33.00	1026.36
STA 5+38.00	1025.80
STA 5+43.20	1025.16

EQUATION: $y = .00107\ x^2$

A PARTIAL PLAN

1/2"=1'-0" 0' 2' 4'

US Army Corps of Engineers
Seattle District

Description	Appr.	Date
		/ /

Designed by: X
Drawn by: X
Checked by: X
Prepared by:

Date: 16 MAR 06
File #: E-56-14-19
Rev.

U.S.ARMY ENGINEER DISTRICT,SEATTLE
CORPS OF ENGINEERS
SEATTLE, WASHINGTON

ADDITIONAL WATER STORAGE PROJECT
HOWARD HANSON DAM
GREEN RIVER

TOWER & AWC PLAN
EL 1029.0 & ELEVATION

WASHINGTON

Plate number:
S-074
Sheet of

DATE AND TIME PLOTTED: 8/6/2008 11:58:49 AM
DESIGN FILE: J:\AECDesigns\HHAW\Structural\HHAWS-1s-074.DGN

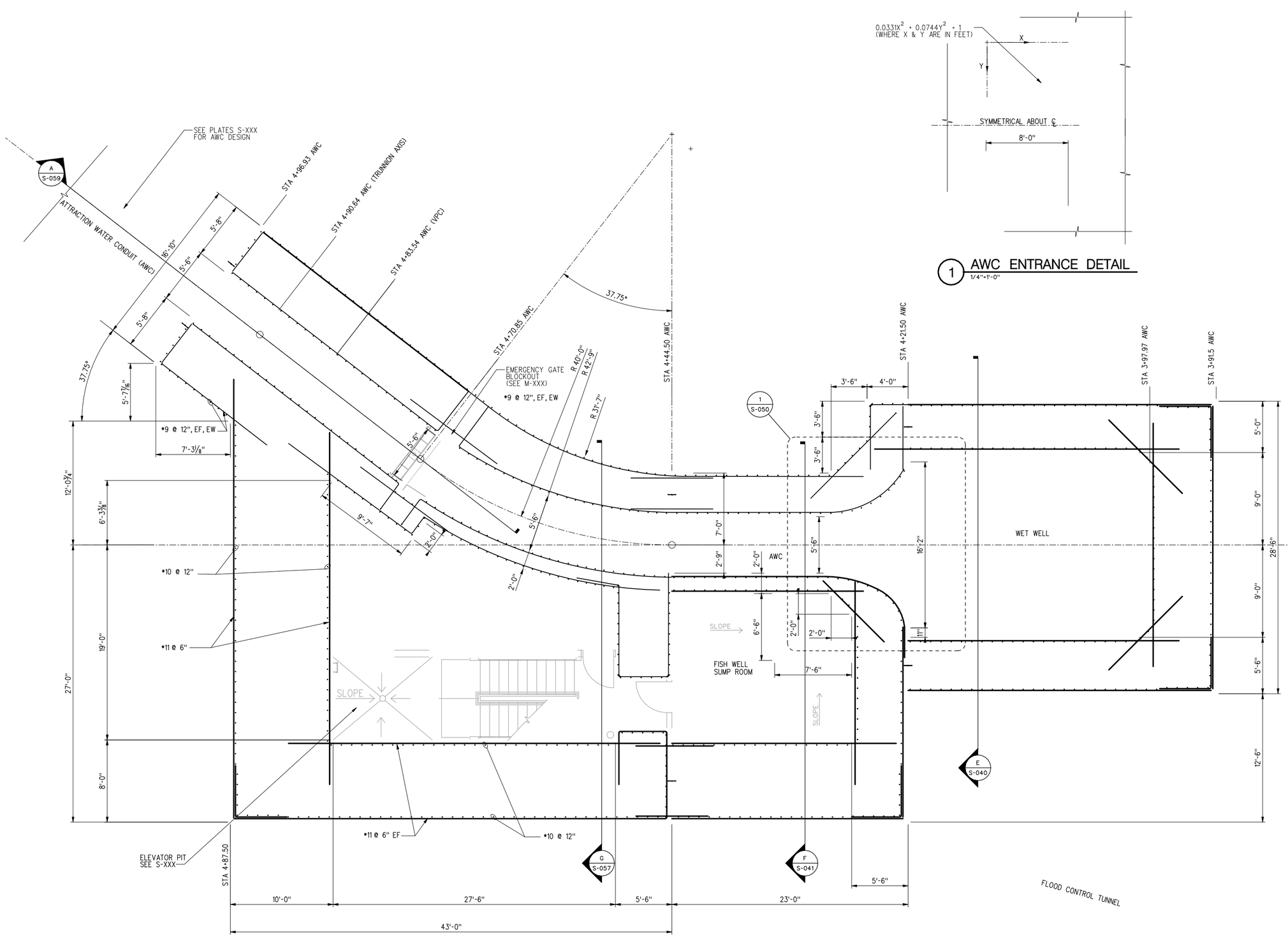

1 AWC ENTRANCE DETAIL
1/4"=1'-0"

PLAN EL 1029.0 – FLOOR #1
1/4"=1'-0"

NOTES:

1. THE CONCRETE OUTLINE SHOWN REPRESENTS THE MINIMUM DESIGN GEOMETRY. CONCRETE AT EL. 1029 SHALL BE CAST AGAINST ROCK AND WALL THICKNESSES WILL HAVE AN INCREASED RESULTING VALUE THAT WILL VARY 6-12 INCHES.

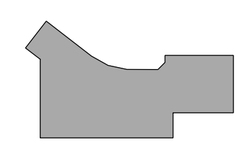

KEY PLAN

US Army Corps of Engineers
Seattle District

Symbol	Description	Date
		/ /

Appr.	Symbol	Description

U.S.ARMY, ENGINEER DISTRICT, SEATTLE
CORPS OF ENGINEERS
SEATTLE, WASHINGTON

Designed by: X
Drawn by: X
Checked by: X
Prepared by:

Date: 16 MAR 06
File #: E-56-14-19
Rev.

ADDITIONAL WATER STORAGE PROJECT
HOWARD HANSON DAM
GREEN RIVER WASHINGTON

TOWER PLANS AT EL 1029.0

Plate number:
S-050
Sheet of

J:\AEC\Designs\HHAW\Structural\HHAWS-1s-075.DGN
DESIGN FILE: 11:59:03 AM
DATE AND TIME PLOTTED: 8/6/2008

PHASE II
EXCAVATION & TUNNELING (EXISTING)

PHASE III
EXCAVATION & TUNNELING

STA 5+12.29

PARABOLIC

STA 4+83.32

1'-0" 3'-0" 13'-7¾"

LIMITS OF EXCAVATION

6" SHOTCRETE

EDGE OF UNFORMED STRUCTURAL CONCRETE

DIMENSIONAL LAYOUT LINE

TEMPORARY BULKHEAD INSTALLED BY CONTRACTOR IN PHASE II - EXCAVATION & TUNNELING

2'-8"

1'-0"

A
-

¾" STEEL LINER EACH SIDE AWC TUNNEL

EL 1029.0

S30° 38'43"E

¾" DIA x 8" WELDED HEADED STUD

3" EQ SPACED (1'-0" MAX) 3" MIN (TYP)

C

A
S-075

CONSTRUCTION JOINT WITH ROUGHENED SURFACE

START OF CONCRETE LINE PHASE II CONSTRUCTION

1'-0"

15'-10" ¾" PL STEEL LINER SEGMENT (EACH SIDE AWC TUNNEL)

14'-0¼" ¾" PL STEEL LINER SEGMENT (EACH SIDE AWC TUNNEL)

A PARTIAL PLAN

1/2"=1'-0" 0 2" 4"

PARABOLIC - CURVE TABLE

AWC STATION	ELEVATION FINISHED FLOOR
STA 4+83.32	1029.00
STA 4+88.00	1028.98
STA 4+93.00	1028.90
STA 4+98.00	1028.77
STA 5+03.00	1028.59
STA 5+08.00	1028.35
STA 5+13.00	1028.06
STA 5+18.00	1027.71
STA 5+23.00	1027.32
STA 5+28.00	1026.86
STA 5+33.00	1026.36
STA 5+38.00	1025.80
STA 5+43.20	1025.16

EQUATION: $y = .00107\ x^2$

4'-0"

EL 1029.0

15¾"

STA 4+83.32 BEGIN PARABOLIC CURVE

y

US Army Corps of Engineers
Seattle District

Symbol	Description	Appr.	Date
			/ /

Designed by: X
Drawn by: X
Checked by: X

Date: 16 MAR 06
File # E-56-14-19
Rev.

U.S.ARMY ENGINEER DISTRICT SEATTLE
CORPS OF ENGINEERS
SEATTLE, WASHINGTON
Prepared by:

ADDITIONAL WATER STORAGE PROJECT
HOWARD HANSON DAM
GREEN RIVER

TOWER & AWC SECTIONS & DETAILS

WASHINGTON

Plate number:
S-075
Sheet of

DESIGN FILE: K:\AEC\Designs\HHAW\Structural\HHAWS-1s-075.DGN
DATE AND TIME PLOTTED: 8/6/2008 11:59:05 AM

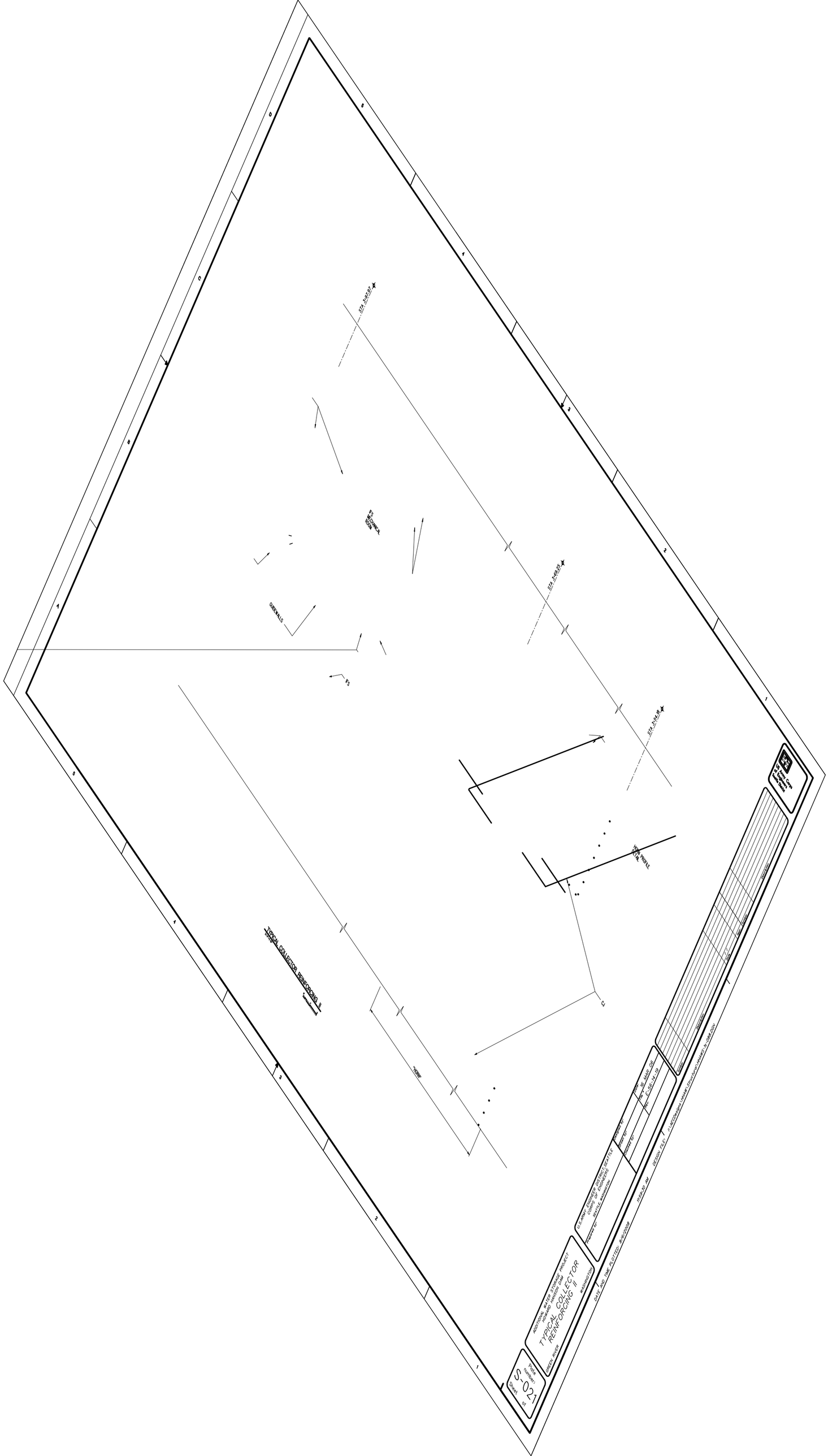

TYPICAL COLLECTOR REINFORCING II
GUIDEWALLS
STA 3+67.97
STA 3+69.25
STA 3+54.18
U.S. ARMY ENGINEER DISTRICT, SEATTLE
CORPS OF ENGINEERS
SEATTLE, WASHINGTON
Prepared by:
Checked by:
Designed by:
Drawn by:
Checked by:
Date: 16 MAR 06
Rev: E-56-14-19
DESIGN FILE: I:\AECOnsignal\HAMM\Structural\HAMM5-15-088.DGN
DATE AND TIME PLOTTED: 8/6/2008
11:59:30 AM
ADDITIONAL WATER STORAGE PROJECT
HOWARD HANSON DAM
TYPICAL COLLECTOR REINFORCING II
GREEN RIVER
WASHINGTON
Plate number:
S-021
Sheet of

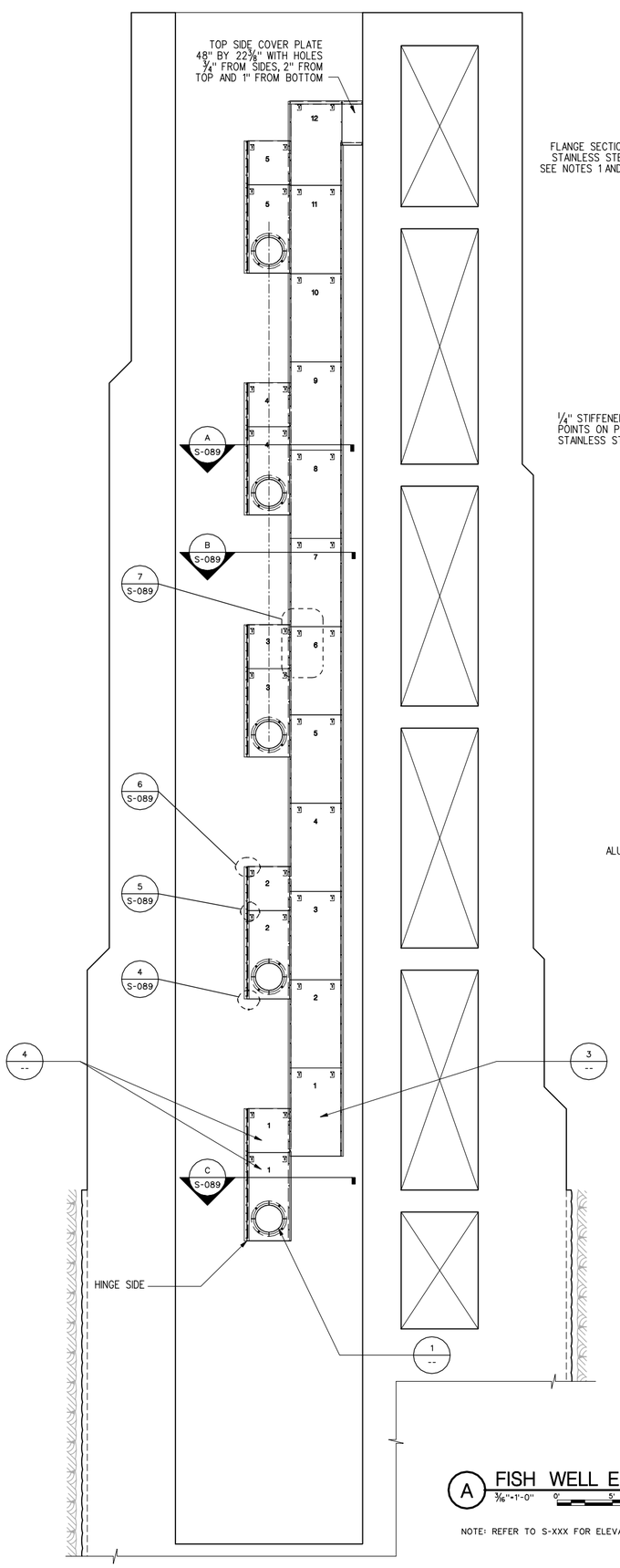

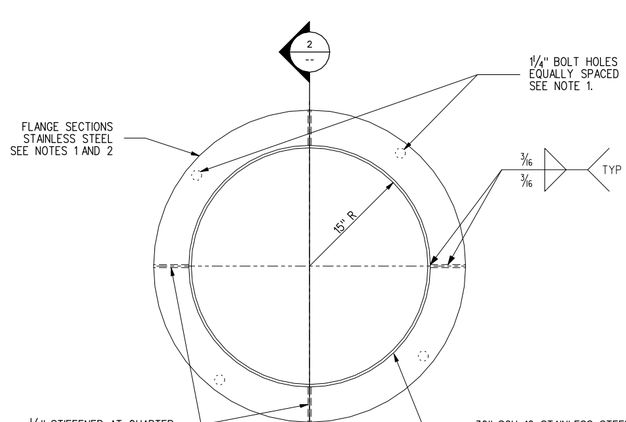

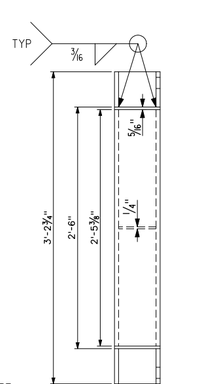

1 COVER PIPE ELEVATION
1½"=1'-0"

2 COVER PIPE SECTION
1½"=1'-0"

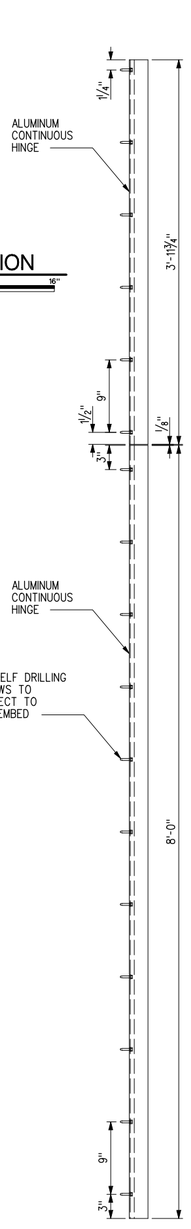

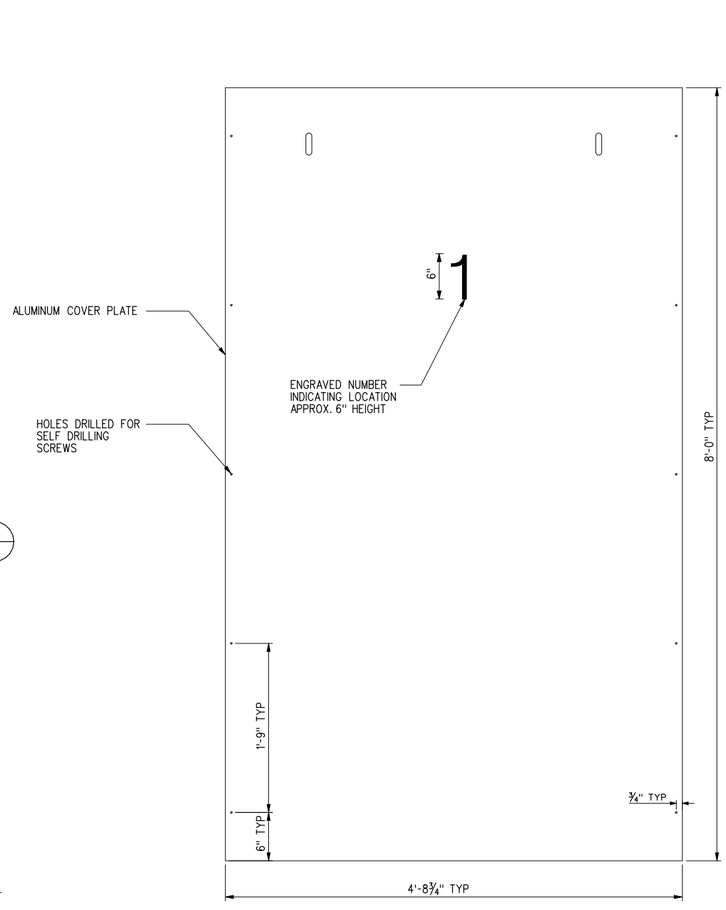

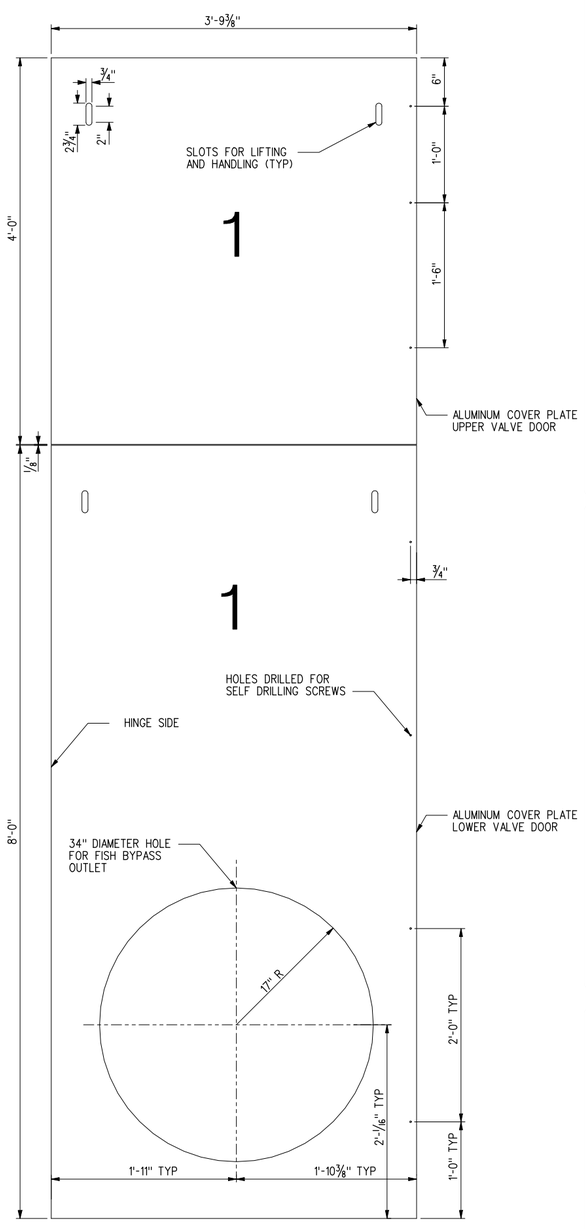

A FISH WELL ELEVATION
3/16"=1'-0"

NOTE: REFER TO S-XXX FOR ELEVATION LOCATION

3 TRENCH RECESS COVER
1½"=1'-0"

4 VALVE RECESS COVER WITH HINGE
1½"=1'-0"

NOTES:

1. FOUR (4) BOLT HOLES TO BE PROVIDED FOR THE FLANGE THAT CONNECTS TO THE BYPASS VALVE. NO HOLES REQUIRED FOR THE FLANGE FACING THE COVER. BOLT HOLES SHALL BE DRILLED TO FIT AN AWWA STANDARD 30" CLASS D PIPE FLANGE, SEE NOTES 5 AND 8 ON S-090 FOR ADDITIONAL INFORMATION. VERIFY WITH VALVE MANUFACTURER.
2. ALL MATERIAL FOR THE COVER PIPE SECTION FOR THE BYPASS PIPE SHALL BE TYPE 304L STAINLESS STEEL. THE SCHEDULE 10 30" PIPE SHALL BE 5/16" THICKNESS.
3. SELF DRILLING SCREWS SHALL BE UNSLOTTED HEX WASHER HEAD SIZE 14 STEEL WITH ZINC COATING SCREW. POINTS SHALL BE APPROPRIATE FOR DRILLING THE TUBE MEMBER.
4. CONTINOUS HINGE SHALL BE AN ALUMINUM HINGE WITH 2" LEAFS AND .375" DIAMETER PIN. HOLES SHALL BE PUNCHED FOR CONNECTION TO THE TUBE MEMBER WITH SELF DRILLING SCREWS. THE HINGE SHALL BE CONNECTED TO THE COVER PLATE BY WELDING.
5. COVER PLATE MATERIAL SHALL BE ALUMINUM 6061-T6, T651.

US Army Corps of Engineers
Seattle District

Symbol	Description
Appr.	
Date	/ /

Date: 16 MAR 06
File #: E-56-14-19
Rev.
Designed by: X
Drawn by: X
Checked by: X

U.S. ARMY ENGINEER DISTRICT, SEATTLE
CORPS OF ENGINEERS
SEATTLE, WASHINGTON
Prepared by:

ADDITIONAL WATER STORAGE PROJECT
HOWARD HANSON DAM
GREEN RIVER WASHINGTON

FISH WELL COVER PLATES

Plate number:
S-088
Sheet of

P:\ACEDesigns\HHAW\Structural\HHAWS_1s-088.DGN
DESIGN FILE:
11:59:31 AM
DATE AND TIME PLOTTED: 8/6/2008

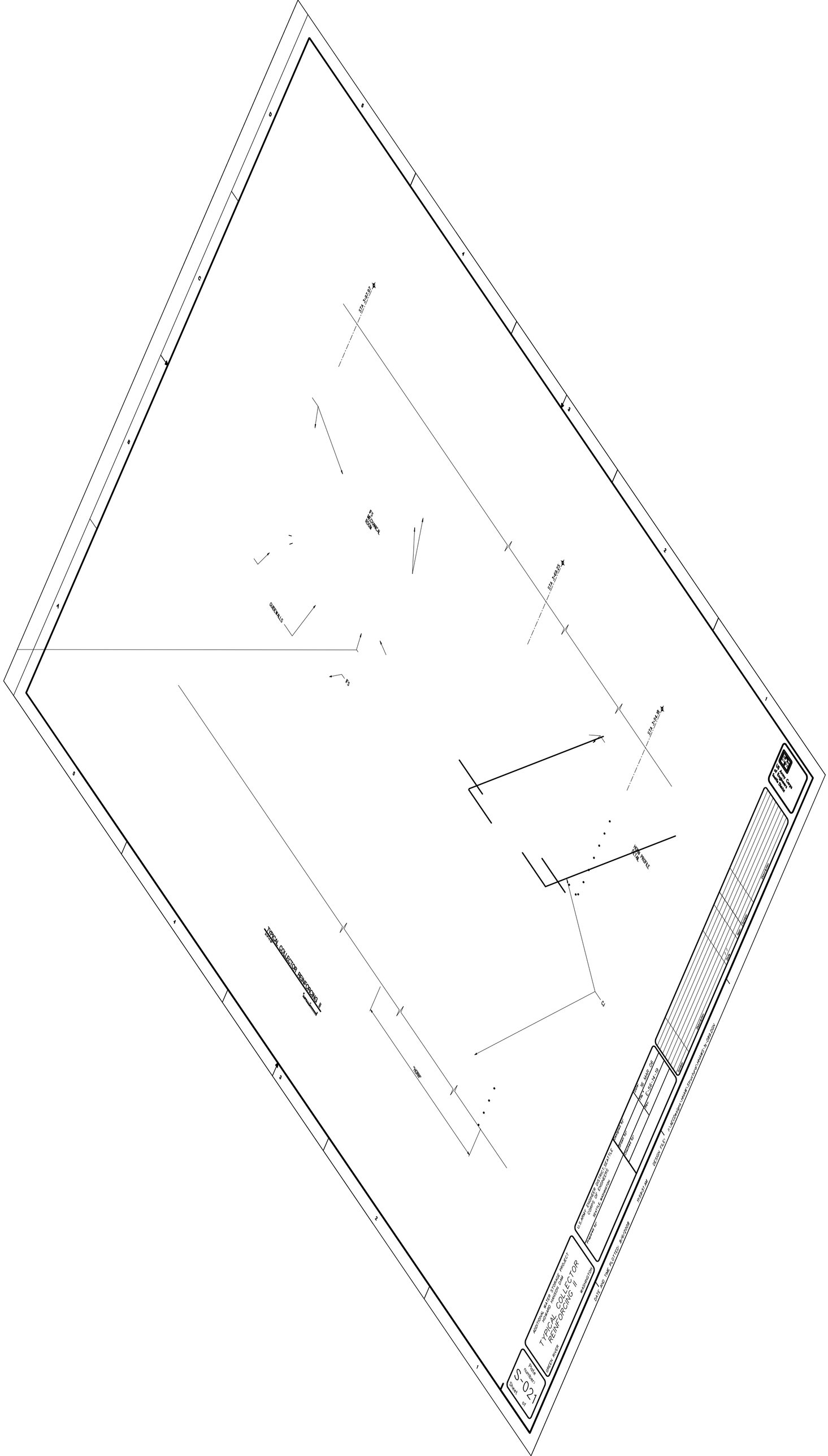

TYPICAL COLLECTOR REINFORCING II
GUIDEWALLS
STA 3+67.97
STA 3+69.25
STA 3+54.18
U.S. ARMY ENGINEER DISTRICT, SEATTLE
CORPS OF ENGINEERS
SEATTLE, WASHINGTON
ADDITIONAL WATER STORAGE PROJECT
HOWARD HANSON DAM
TYPICAL COLLECTOR REINFORCING II
GREEN RIVER
WASHINGTON
DATE AND TIME PLOTTED: 8/6/2008
DESIGN FILE: I:\AECOmsigns\HHAM\Structural\HHAMS-15-08.DGN
Date: 16 MAR 08
Rev: E-56-14-19
Designed by:
Drawn by:
Checked by:
Reviewed by:
Date:
Plate number:
S-021
Sheet of

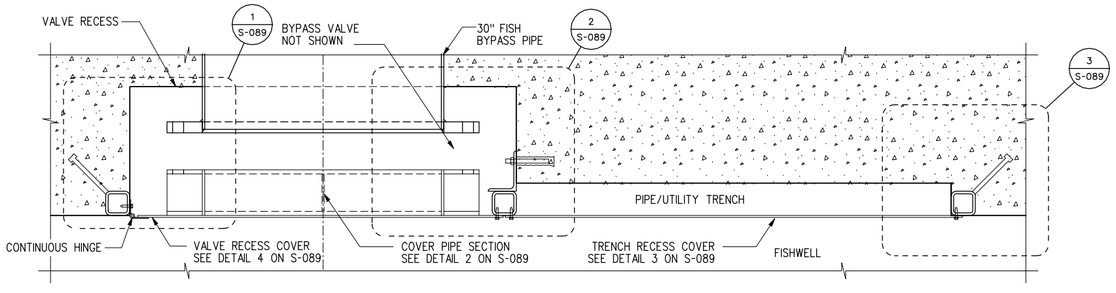

A SECTION AT BYPASS VALVE RECESS
1½"=1'-0"

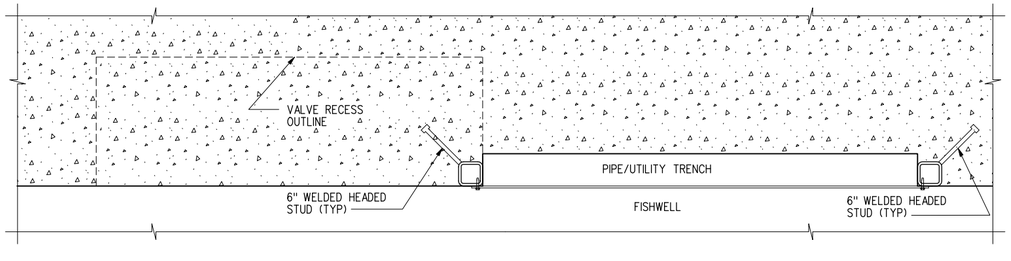

B SECTION BETWEEN BYPASS VALVE RECESS
1½"=1'-0"

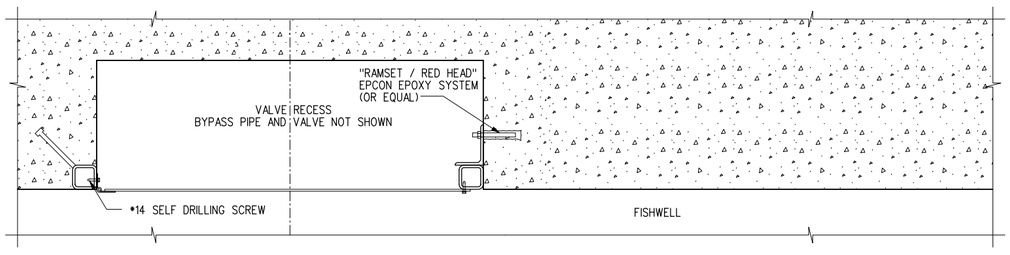

C SECTION AT BYPASS VALVE RECESS BELOW EL 1069.50
1½"=1'-0"

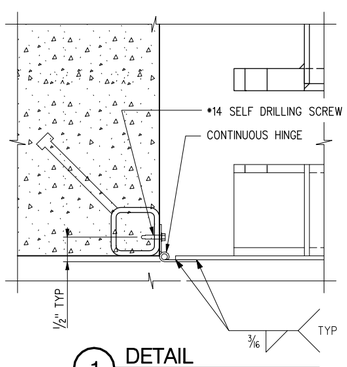

1 DETAIL
3"=1'-0"

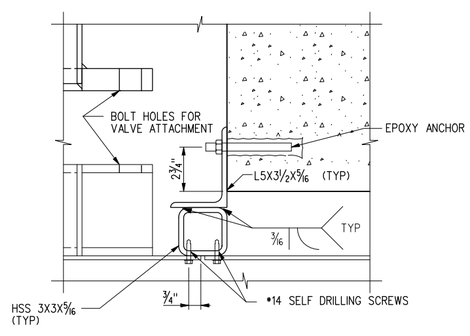

2 DETAIL
3"=1'-0"

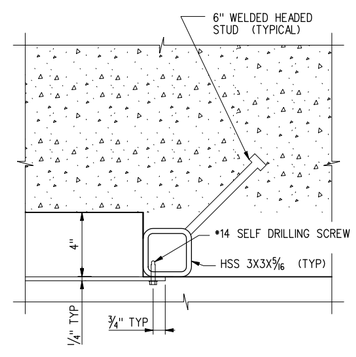

3 DETAIL
3"=1'-0"

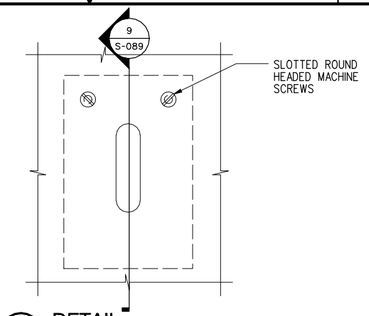

8 DETAIL
6"=1'-0"

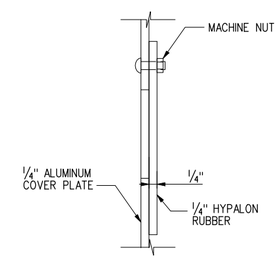

9 DETAIL
6"=1'-0"

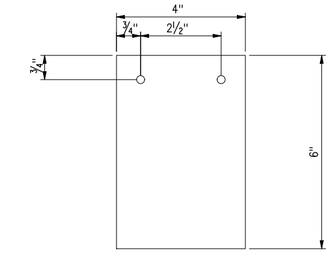

10 DETAIL
6"=1'-0"

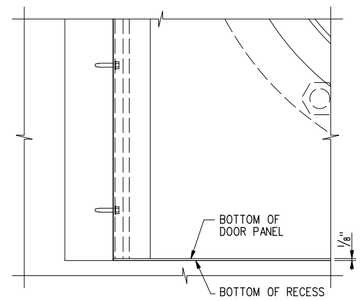

4 DETAIL
3"=1'-0"

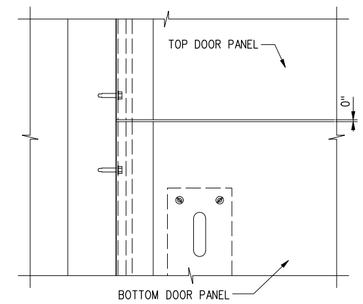

5 DETAIL
3"=1'-0"

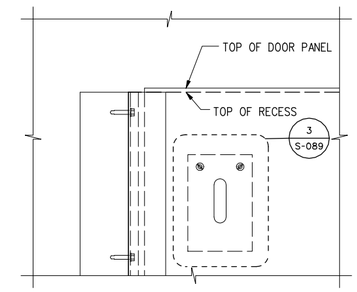

6 DETAIL
3"=1'-0"

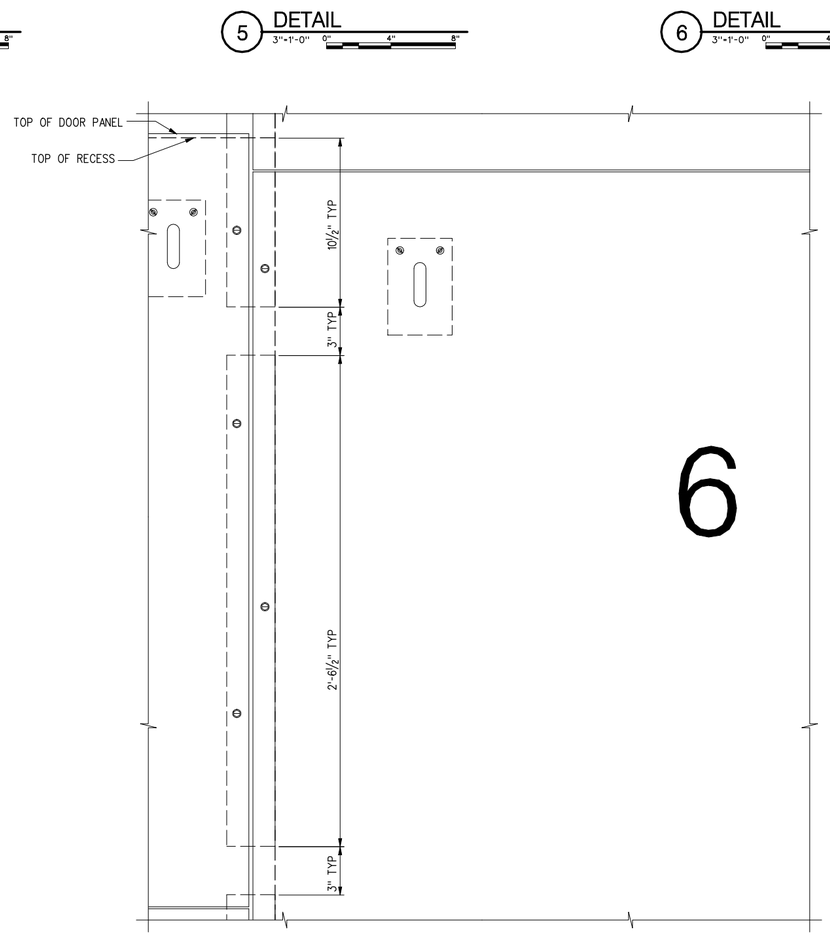

7 CUTOUT LOCATION FOR PIPES
3"=1'-0"

NOTES:
1. XXXX
2. XXXX

US Army Corps of Engineers
Seattle District

Symbol	Description	Date	Appr.	Symbol	Description
		/ /			

Designed by: X
Drawn by: X
Checked by: X
Date: 16 MAR 06
File # E-56-14-19
Rev.

U.S.ARMY ENGINEER DISTRICT,SEATTLE
CORPS OF ENGINEERS
SEATTLE, WASHINGTON
Prepared by:

ADDITIONAL WATER STORAGE PROJECT
HOWARD HANSON DAM
FISH WELL COVER
PLATE DETAILS
GREEN RIVER WASHINGTON

Plate number:
S-089
Sheet of

DATE AND TIME PLOTTED: 8/6/2008 11:59:51 AM DESIGN FILE: I:\AECDesigns\HHAW\Structural\HHAWS-1s-089.DGN

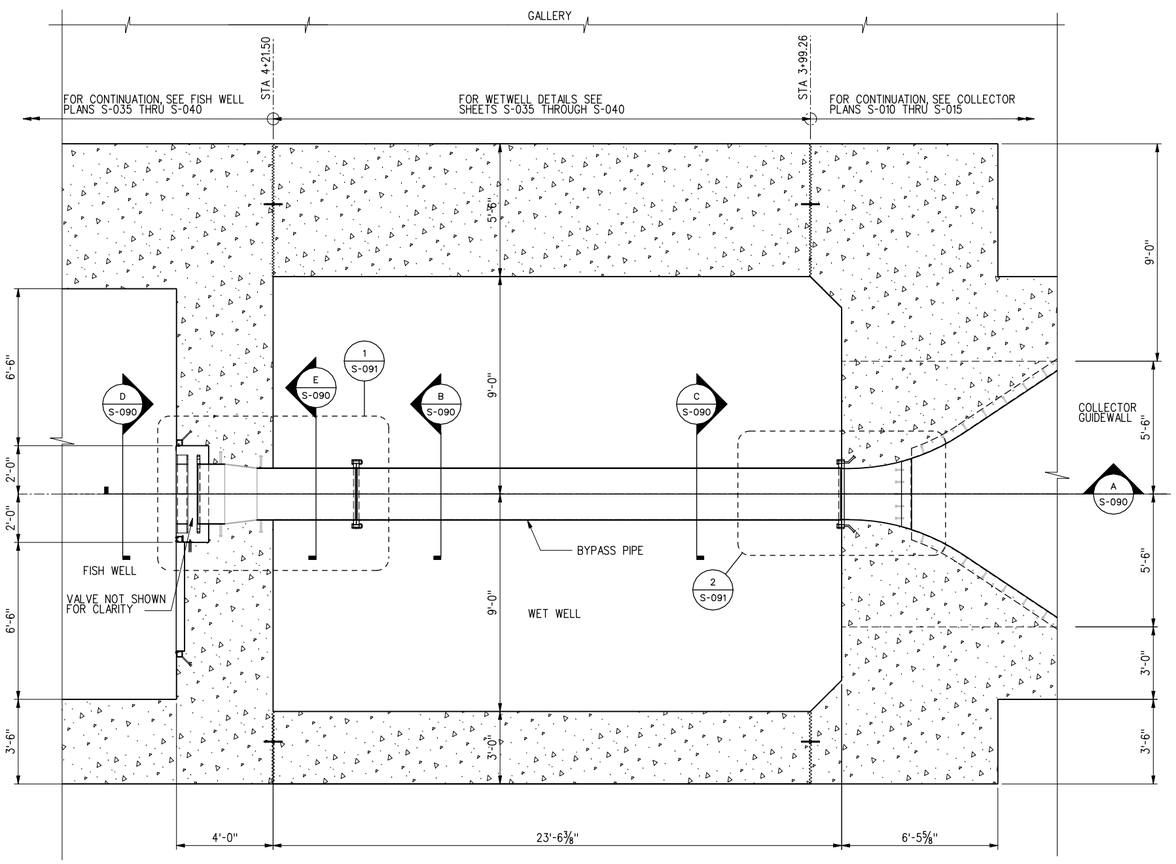

BYPASS PIPE PLAN – TYPICAL

SCALE: 3/8"=1'-0"

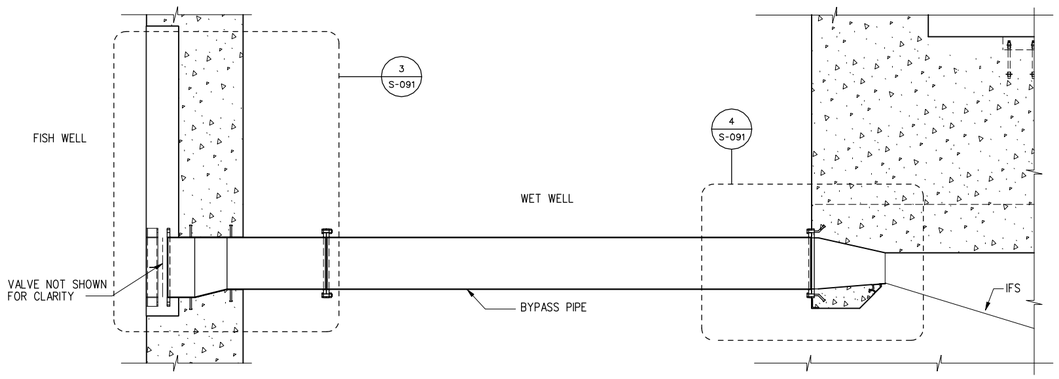

A BYPASS PIPE PROFILE

SCALE: 3/8"=1'-0"

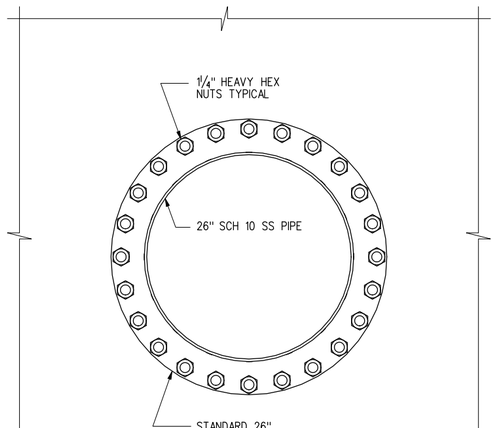

B BYPASS SECTION

SCALE: 1 1/2"=1'-0"

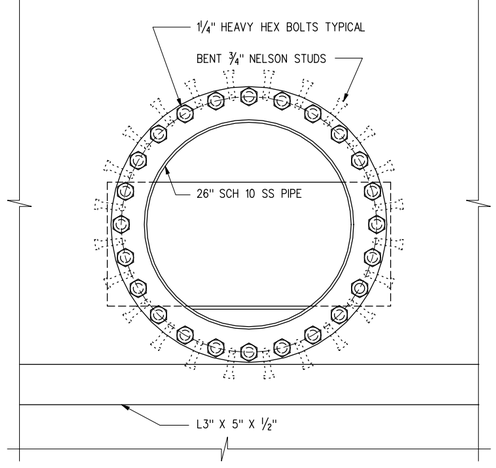

C BYPASS SECTION

SCALE: 1 1/2"=1'-0"

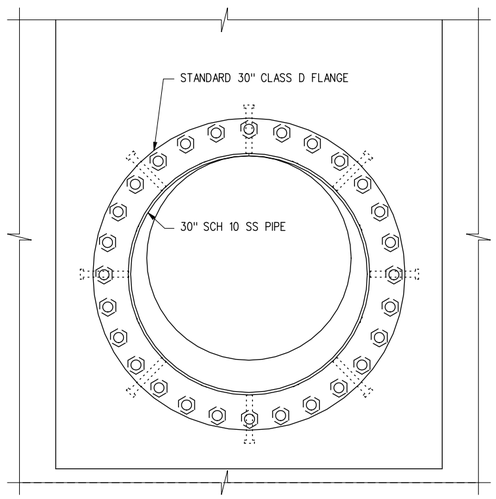

D BYPASS SECTION

SCALE: 1 1/2"=1'-0"

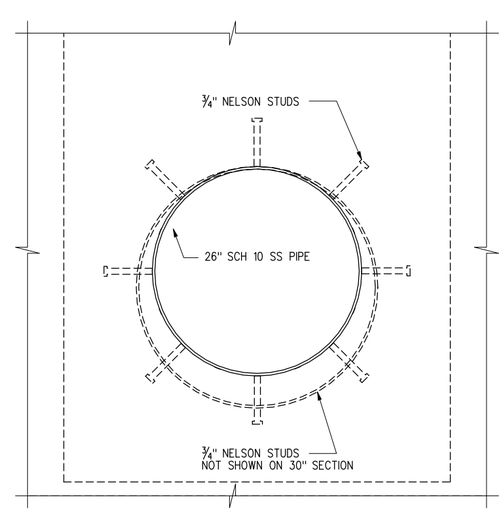

E BYPASS SECTION

SCALE: 1 1/2"=1'-0"

NOTES:

1. ALL BYPASS BOLT CONNECTIONS TO UTILIZE 1 1/4" DIA STAINLESS STEEL BOLTS. THE LENGTHS SHALL BE APPROPRIATE FOR THE DIFFERENT CONNECTIONS.
2. ALL BYPASS PIPE MATERIAL SHALL BE TYPE 304L STAINLESS STEEL SCHEDULE 10: 26" PIPE, 30" PIPE, AND REDUCER. SCHEDULE 10 SHALL BE 5/16" THICKNESS.
3. ALL BYPASS PIPE FLANGE WELDS SHALL BE ACCORDING TO AWWA C207. THE STANDARD PIPE FLANGES ARE BASED ON DIMENSIONS IN AWWA C207.
4. THE END OF THE PIPE SHALL BE HELD BACK 1/8" PLUS THE FILLET WELD SIZE. REFER TO AWWA C207 FOR ADDITIONAL INFORMATION.
5. ALL BOLTS SHALL BE ASTM F593 ALLOY GROUP 1 HEAVY HEX. ALL NUTS SHALL BE ASTM F594 ALLOW GROUP 1 HEAVY HEX.
6. THE STANDARD 26" CLASS D PIPE FLANGE HAS AN OUTSIDE DIAMETER OF 34 1/4", AN INSIDE DIAMETER OF 26 1/8", DIAMETER OF BOLT CIRCLE OF 31 3/4", WITH (24) 1 1/4" BOLTS, AND A THICKNESS OF 1.312".
7. THE 26" EMBEDDED FLANGE SHALL BE FABRICATED TO THE SAME DIMENSIONS AS THE STANDARD 26" CLASS D PIPE FLANGE EXCEPT THAT THE INSIDE DIAMETER SHALL BE 25 5/8" AND THE BOLT HOLES SHALL BE THREADED FOR THE 1 1/4" BOLTS.
8. THE STANDARD 30" CLASS D PIPE FLANGE HAS AN OUTSIDE DIAMETER OF 38 3/4", AN INSIDE DIAMETER OF 30 1/8", DIAMETER OF BOLT CIRCLE OF 36", WITH (28) 1 1/4" BOLTS, AND A THICKNESS OF 1.375".
9. THE LOCATION OF THE PIPE FLANGE CONNECTION IS BASED UPON A STANDARD PIPE LENGTH OF 20'-0". THE HOLD BACK OF THE PIPE TO THE OUTSIDE OF THE FLANGE (NOTE 4) GIVES A FLANGE TO FLANGE DIMENSION OF 20'-1/8".
10. THE DESIGN OF THE PIPE CONNECTIONS IN THE WET WELL INCORPORATES 1/8" SHIMS AT BOTH ENDS OF THE 20'-1/8" PIPE SECTION. CONTRACTOR SHALL SUPPLY THE SHIMS REQUIRED TO FIT CONSTRUCTION TOLERANCES.
11. THE CONTRACTOR SHALL HAVE THE ENTIRE BYPASS PIPE CONNECTED AND IN PLACE PRIOR TO CASTING CONCRETE TO ENSURE PROPER ALIGNMENT OF THE VARIOUS BOLT HOLES.
12. THE WELDED HEADED STUDS WELDED TO THE EMBEDDED PIPE FLANGE AND THE 26" AND 30" PIPE SECTIONS SHALL BE 316L STAINLESS STEEL.

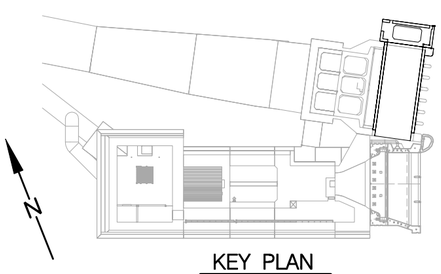

KEY PLAN

US Army Corps of Engineers
Seattle District

1 1/2" = 1'

Symbol	Date	Appr.	Description
	/ /		

Date: 16 MAR 06
File #
Rev. E-56-14-19

Designed by: X
Drawn by: X
Checked by: X

U.S.ARMY ENGINEER DISTRICT,SEATTLE
CORPS OF ENGINEERS
SEATTLE, WASHINGTON
Prepared by:

ADDITIONAL WATER STORAGE PROJECT
HOWARD HANSON DAM
GREEN RIVER WASHINGTON

FISH BYPASS PIPE PLAN, SECTIONS & DETAILS

Plate number:
S-090
Sheet of

I:\AECDesigns\HHAW\Structural\HHAWS_ts-090.DGN
DESIGN FILE:
12:00:03 PM
DATE AND TIME PLOTTED: 8/6/2008

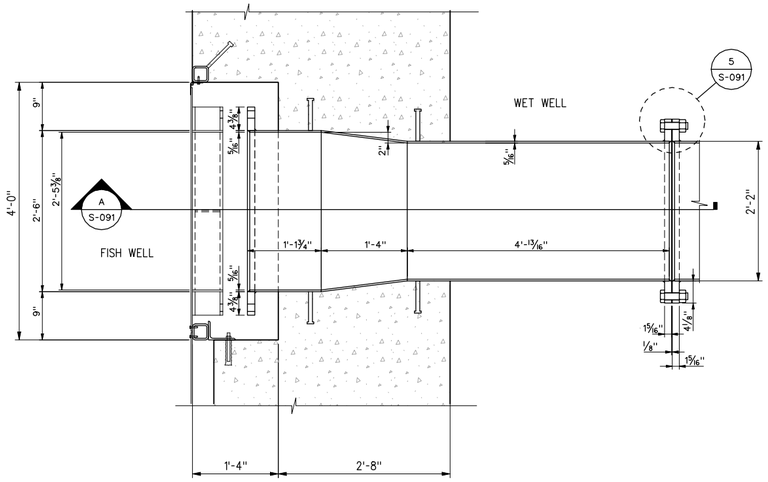

1 FISH WELL CONNECTION DETAIL
SCALE: 1"=1'-0"

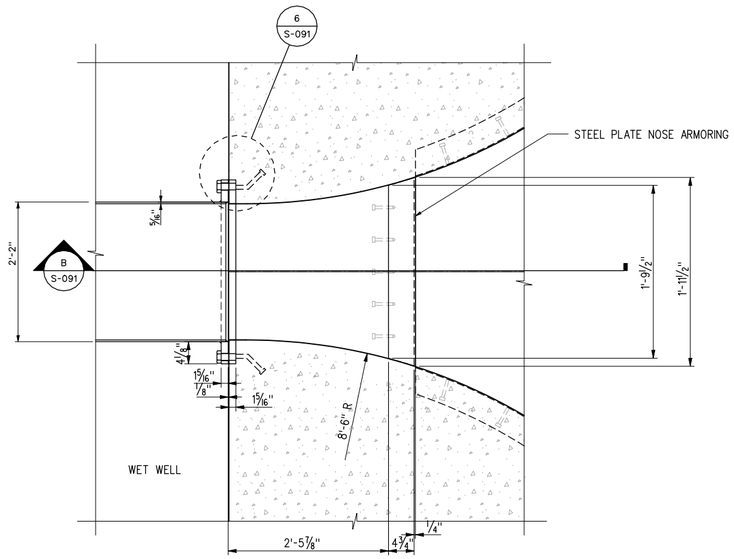

2 COLLECTOR CONNECTION DETAIL
SCALE: 1"=1'-0"

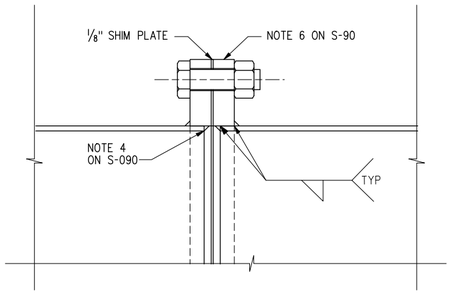

5 FLANGE CONNECTION DETAIL
SCALE: 3" = 1'-0"

5 EMBEDDED FLANGE CONNECTION DETAIL
SCALE: 3" = 1'-0"

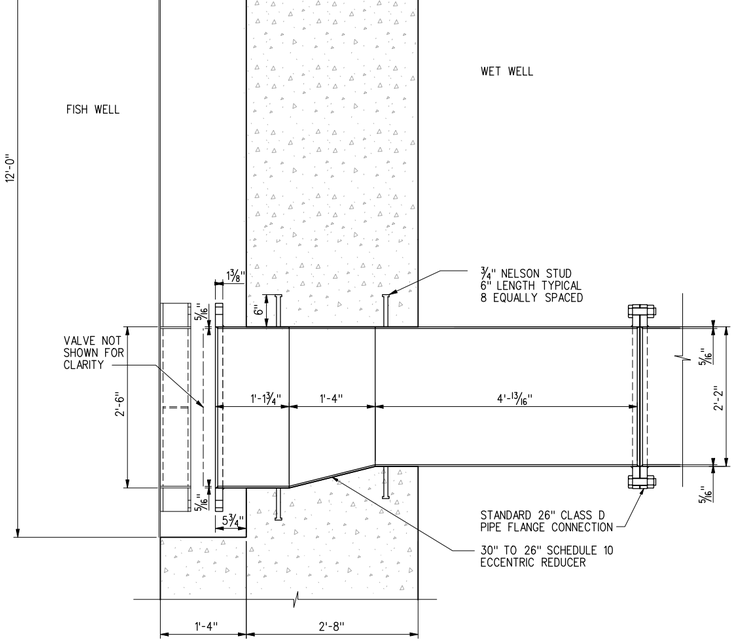

3 A FISH WELL CONNECTION PROFILE
SCALE: 1"=1'-0"

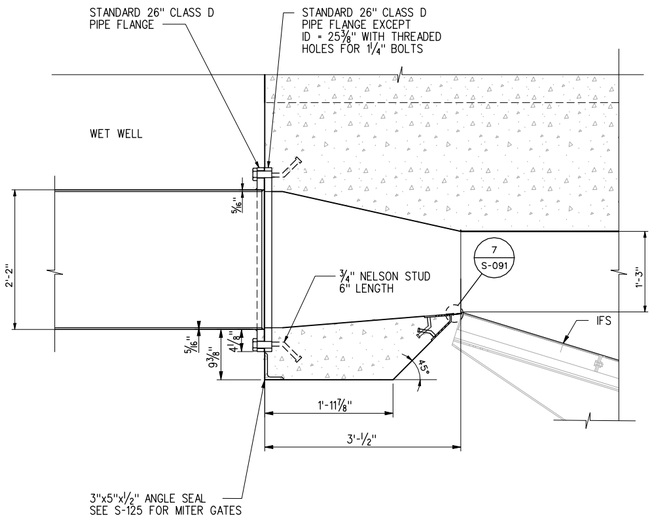

4 B COLLECTOR CONNECTION PROFILE
SCALE: 1"=1'-0"

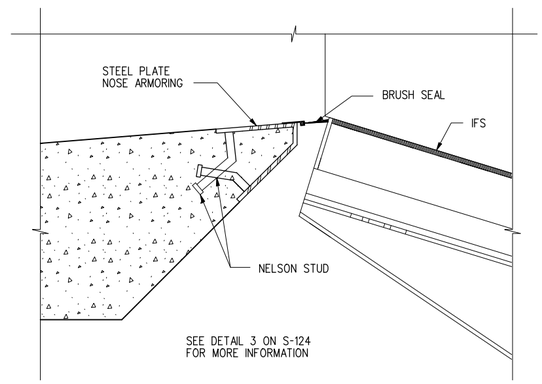

7 BRUSH SEAL DETAIL
SCALE: 3" = 1'-0"

NOTE:
SEE NOTES ON PLATE S-090.

US Army Corps of Engineers
Seattle District

Description	Symbol	Appr.	Date
			/ /

Designed by:
Drawn by:
Checked by:
Prepared by:
Date: 16 MAR 06
File #: E-56-14-19
Rev.

U.S.ARMY ENGINEER DISTRICT,SEATTLE
CORPS OF ENGINEERS
SEATTLE, WASHINGTON

ADDITIONAL WATER STORAGE PROJECT
HOWARD HANSON DAM
BYPASS PIPE DETAILS
GREEN RIVER WASHINGTON

Plate number:
S-091
Sheet of

FILE: I:\AEC\Designs\HHAW\Structural\HHAWS-1s-091.DGN
DESIGN FILE:
12:00:16 PM
DATE AND TIME PLOTTED: 8/6/2008



DEBRIS BOOM PLAN

1/16" = 1'-0" 0' 16' 32'

NOTES:
1. SEE PLATE C-002 FOR BOOM LOCATION.

US Army Corps of Engineers
Seattle District

Symbol	Description	Date	Appr.	Symbol	Description
		/ /			

Designed by: MCAVOY
Drawn by: MCAVOY
Checked by: NOYES
Date: 16 MAR 06
File #: E-56-14-19
Rev.

U.S.ARMY ENGINEER DISTRICT,SEATTLE
CORPS OF ENGINEERS
SEATTLE, WASHINGTON
Prepared by:

ADDITIONAL WATER STORAGE PROJECT
HOWARD HANSON DAM
DEBRIS BOOM PLAN
GREEN RIVER WASHINGTON

Plate number:
S-100
Sheet of

DATE AND TIME PLOTTED: 8/6/2008 12:00:27 PM DESIGN FILE: I:\AECDesigns\HHAW\Structural\HHAWS-1s-100.DGN

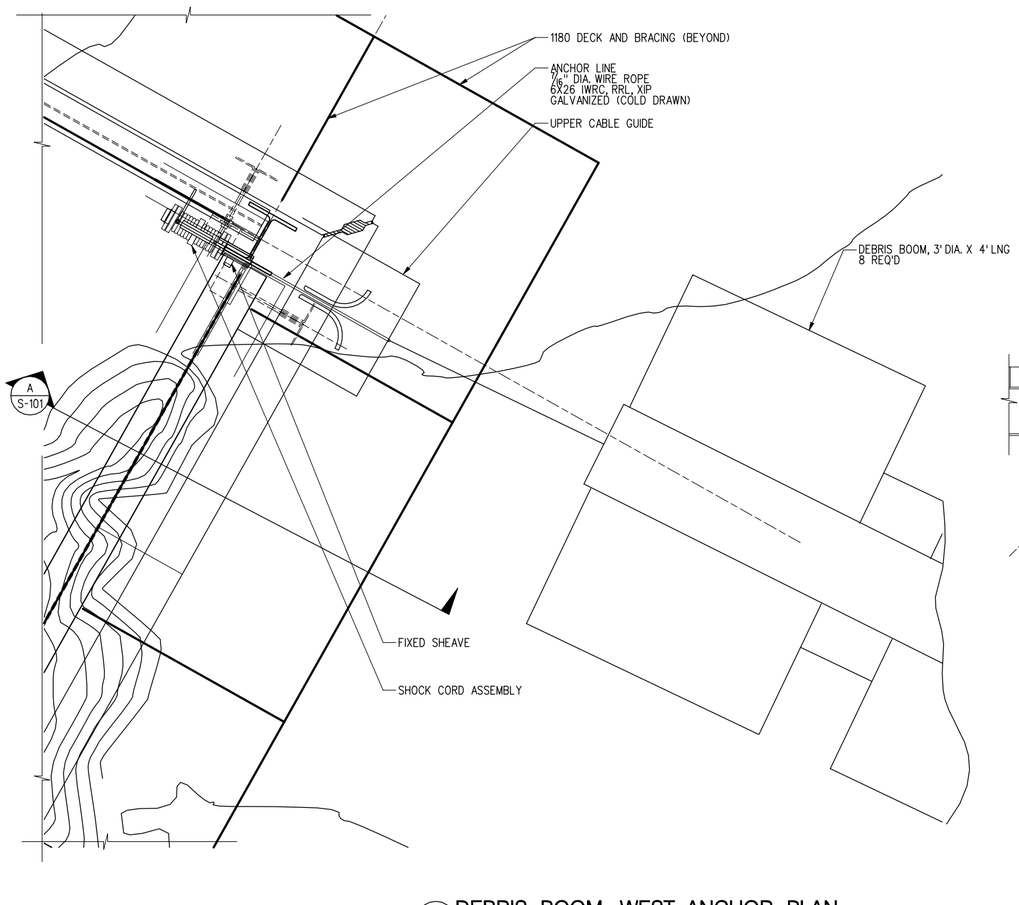

1 S-101 **DEBRIS BOOM WEST ANCHOR PLAN** 1" = 1'-0"

NOTES:

1. LINE CABLE BEARING PORTION WITH 3/4" HIGH DENSITY POLYETHYLENE.
2. 5/8" DIA MIL-C-5651B SHOCK CORD. TERMINATE LOOPS WITH STAINLESS STEEL CRIMP CONNECTOR.
3. ANCHOR LINE FEED OUT: 16'-0"
   ELEV 1080' BOOM LINE FEED OUT: 22'-0"
   ELEV 1130' BOOM LINE FEED OUT: 31'-0"
   ELEV 1177' BOOM LINE FEED OUT: 17'-0"
4. GAP BETWEEN ANCHOR LINE AND STRUCTURE TO HAVE LINE WITH FLOATS TO PREVENT DEBRIS PASSAGE WHEN ANCHOR LINE PULLS OUT. DETAILS TBD.

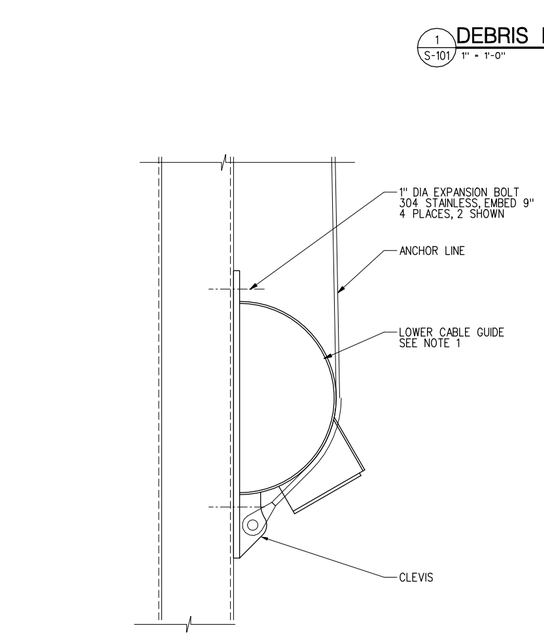

1 S-101 **LOWER CABLE SUPPORT** 1 1/2" = 1'-0"

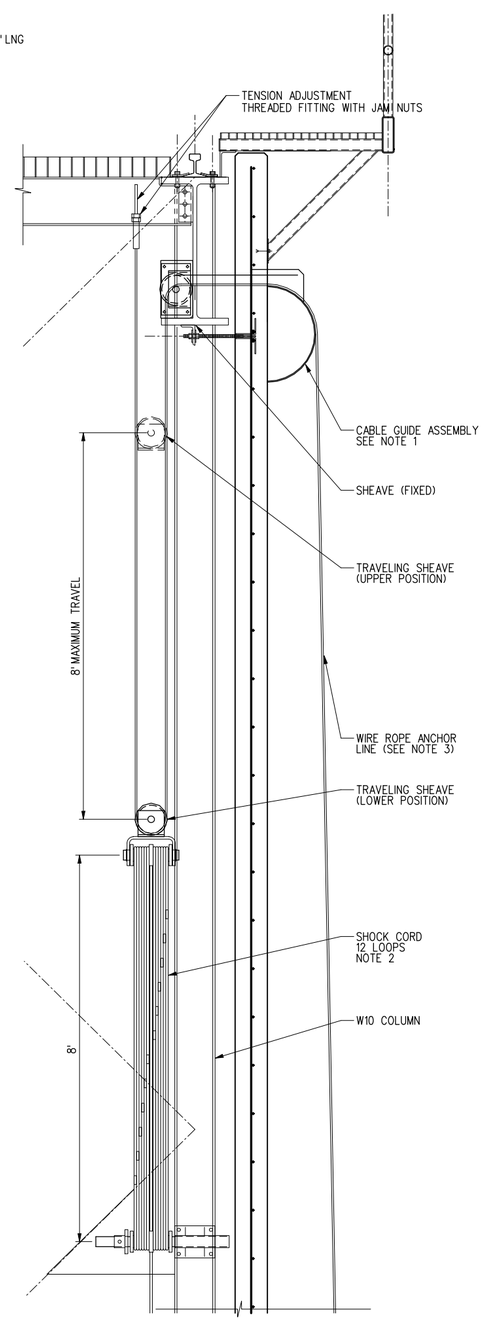

2 S-101 **UPPER CABLE SUPPORT** 3/4" = 1'-0"

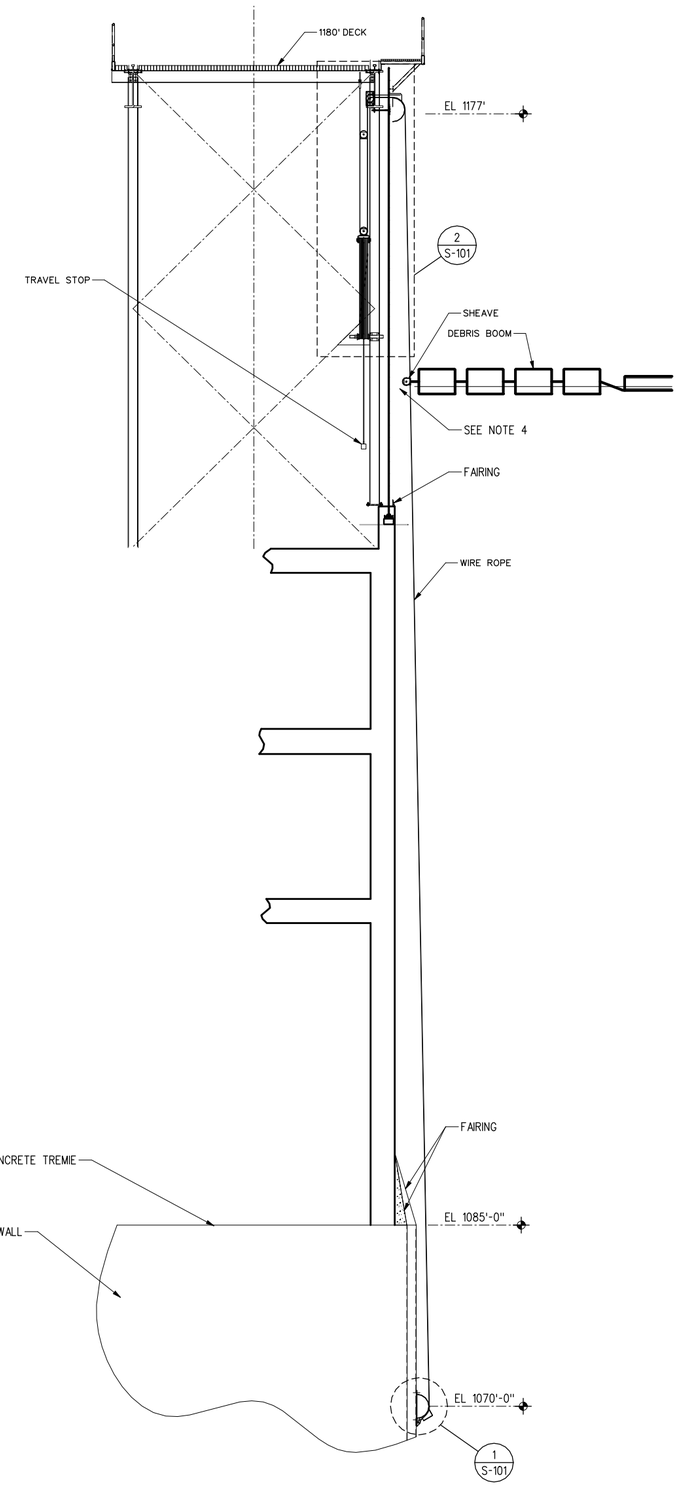

A S-101 **DEBRIS BOOM WEST ANCHOR ELEVATION** 3/16" = 1'-0"

US Army Corps of Engineers
Seattle District

Symbol	Description
Appr.	
Date	/ /
Symbol	Description

Designed by: MCAVOY
Drawn by: MCAVOY
Checked by: NOYES
Date: 16 MAR 06
File #
E-56-14-19
Rev.

U.S. ARMY ENGINEER DISTRICT, SEATTLE
CORPS OF ENGINEERS
SEATTLE, WASHINGTON
Prepared by:

ADDITIONAL WATER STORAGE PROJECT
HOWARD HANSON DAM
GREEN RIVER WASHINGTON

WEST ANCHOR - DEBRIS BOOM

Plate number:
S-101
Sheet of

I:\AEC\Designs\HHAW\Structural\HHAWS-1s-101.DGN
DESIGN FILE:
12:00:40 PM
DATE AND TIME PLOTTED: 8/6/2008

ALSO LOCATE STAFF GAGE ON ROCK FACE

N102590
E1764120

N102589.67
E1764090.24
ELEV 1065.00

GROUTED ROCK ANCHOR
10-FOOT #8 BAR
GRADE 75

DEBRIS BOOM WIRE

N102560
E1764070

DEBRIS BOOM

BLOCK AND SHEAVE ASSY

TOP OF MAST:
N102518.92
E1764122.28
ELEV 1180.00

N102528.49
E1764129.14
ELEV 1160.18

13,700 POUND-FORCE
FUSIBLE LINK

13,000 POUND-FORCE
FUSIBLE LINK

6" DIA SCHEDULE 40 STEEL MAST
15' TALL, PINNED AT BASE TO
DEAD MAN ANCHOR

TURNBUCKLE
3 PLACES

N102530
E1764160

GROUTED ROCK ANCHOR
10-FOOT THREADED
#8 BAR, GRADE 75
3 PLACES

N102520.21
E1764109.22
ELEV 1157.79

N102500
E1764110

N102514.08
E1764124.48
ELEV 1171.52

1" DIA WIRE ROPE
GUY WIRE
3 PLACES

BOOM LINE-EXPANSION
DEBRIS BOOMS

1065 1075 1100 1125 1150 1175

2 S-100 EAST ANCHOR – DEBRIS BOOM
1/8" = 1'-0"

1/8" = 1' - 0"

US Army Corps of Engineers
Seattle District

Symbol	Description	Appr.	Date
			/ /

U.S.ARMY ENGINEER DISTRICT,SEATTLE
CORPS OF ENGINEERS
SEATTLE, WASHINGTON
Prepared by:

Designed by: MCAVOY
Drawn by: CHIHARA
Checked by: NOYES

Date: 16 MAR 06
File #: E-56-14-19
Rev.

ADDITIONAL WATER STORAGE PROJECT
HOWARD HANSON DAM
EAST ANCHOR - DEBRIS BOOM
GREEN RIVER WASHINGTON

Plate number: S-102
Sheet of

P:\ACEDesigns\HHAW\Structural\HHAWS-1s-102.DGN
DESIGN FILE:
12:00:49 PM
DATE AND TIME PLOTTED: 8/6/2008

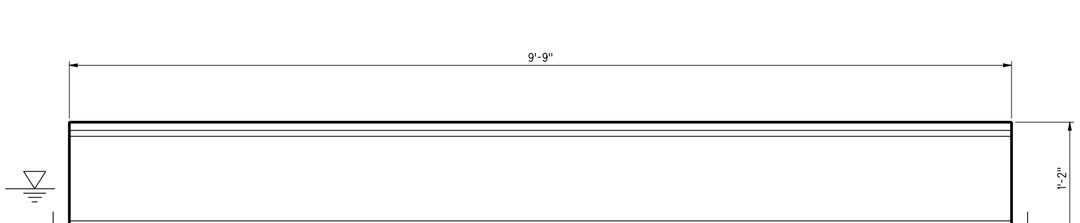

FRONT VIEW– DEBRIS BOOM

1 1/2" = 1'-0"

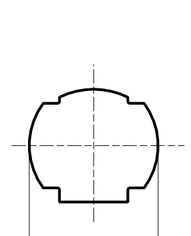

END VIEW– DEBRIS BOOM

1 1/2" = 1'-0"

1/2" = 1' - 0"

US Army Corps of Engineers
Seattle District

Symbol	Description	Appr.	Date
			/ /

U.S.ARMY ENGINEER DISTRICT,SEATTLE
CORPS OF ENGINEERS
SEATTLE, WASHINGTON

Prepared by:

Designed by: MCAVOY
Drawn by: MCAVOY/CHIHARA
Checked by: NOYES

Date: 16 MAR 06
File #
E-56-14-19
Rev.

ADDITIONAL WATER STORAGE PROJECT
HOWARD HANSON DAM

DEBRIS BOOM DETAILS

GREEN RIVER WASHINGTON

Plate number:
S-103
Sheet of

DATE AND TIME PLOTTED: 8/6/2008 12:00:56 PM DESIGN FILE: P:\AECDesigns\HHAW\Structural\HHAWS-1s-103.DGN

NOTES
1. ADJUST BALLAST PLATE QUANTITY TO MATCH GATE AND FRAME WATER LINES.
2. USE GALVANIZED HARDWARE THROUGHOUT UNO.

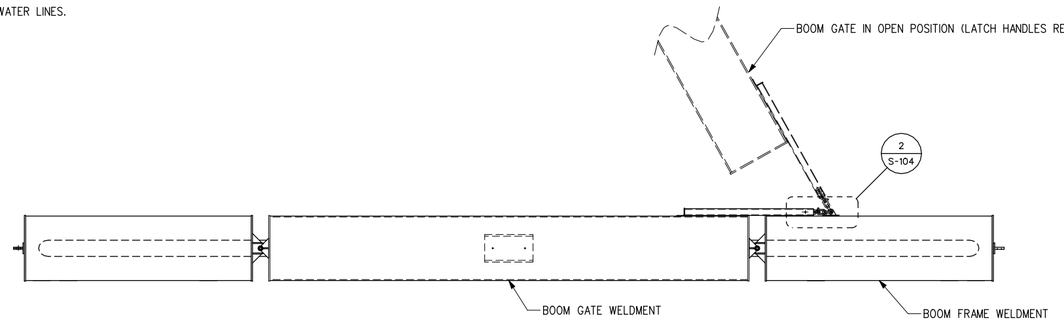

TOP VIEW – GATE BOOM ASSEMBLY
1/2" = 1'-0"

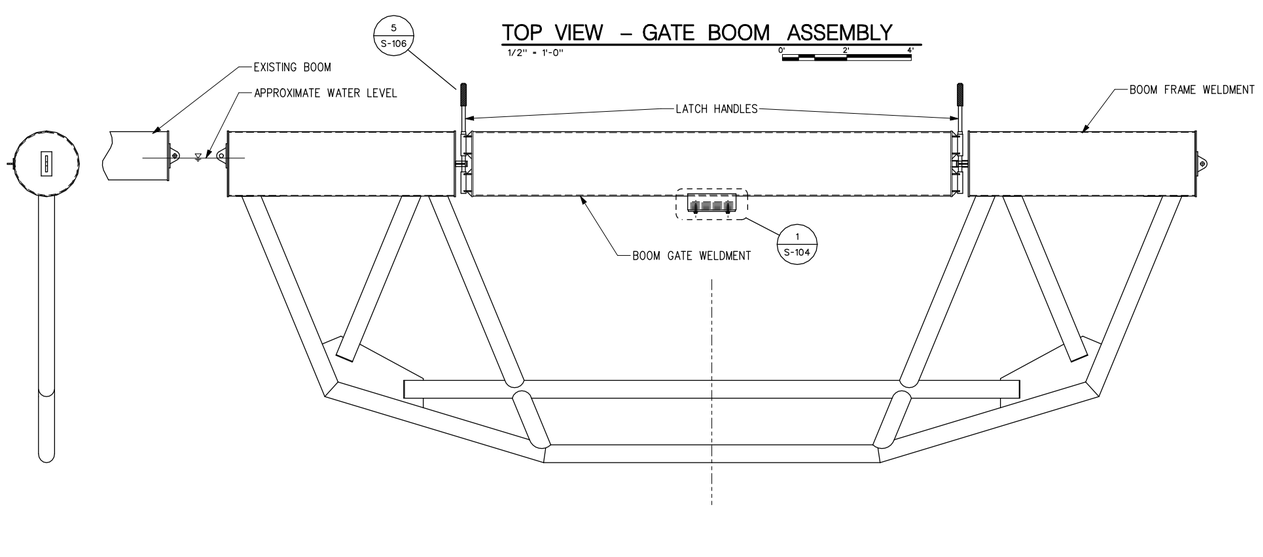

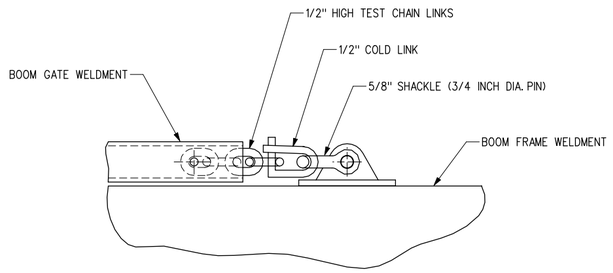

2 HINGE DETAIL
3" = 1'-0"

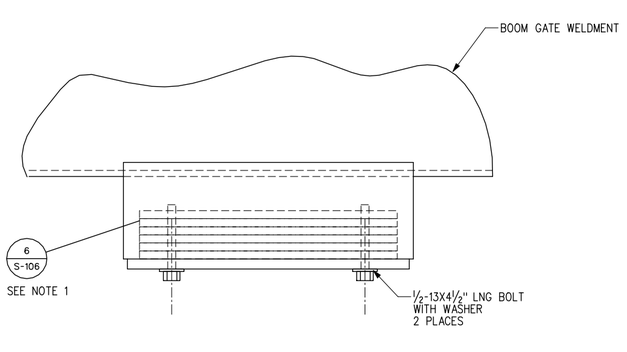

A SIDE VIEW – BOOM
1/2" = 1'-0"

FRONT VIEW – GATE BOOM ASSEMBLY
1/2" = 1'-0"

1 BALLAST DETAIL
3" = 1'-0"

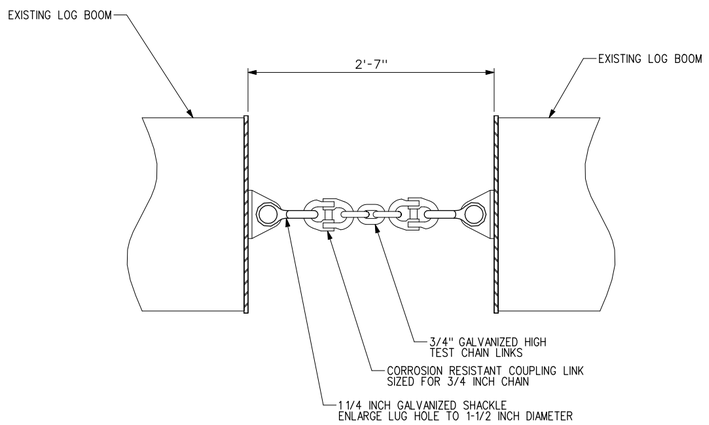

CONNECTING LINK MODIFICATIONS
1 1/2" = 1'-0"

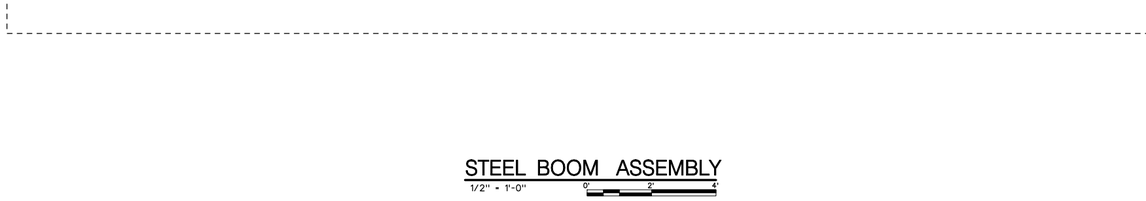

STEEL BOOM ASSEMBLY
1/2" = 1'-0"

US Army Corps of Engineers
Seattle District

Symbol	Date	Description
	/ /	

Date: 16 MAR 06
File #: E-56-14-19
Rev.

Designed by: MCAVOY
Drawn by: MCAVOY
Checked by: NOYES

U.S.ARMY ENGINEER DISTRICT,SEATTLE
CORPS OF ENGINEERS
SEATTLE, WASHINGTON
Prepared by:

ADDITIONAL WATER STORAGE PROJECT
HOWARD HANSON DAM

DEBRIS GATE BOOM ASSEMBLY

WASHINGTON
GREEN RIVER

Plate number:
S-104
Sheet of

FILE: I:\AEC\Designs\HHAW\Structural\HHAWS-1s-104.DGN
DESIGN FILE:
12:01:04 PM
DATE AND TIME PLOTTED: 8/6/2008

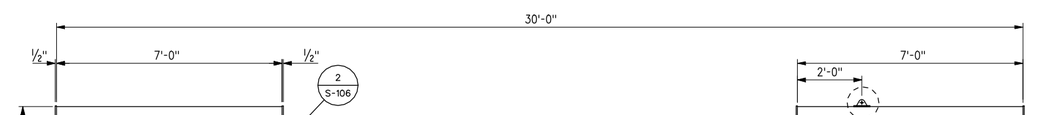

TOP VIEW – BOOM FRAME WELDMENT

1/2" = 1'-0"

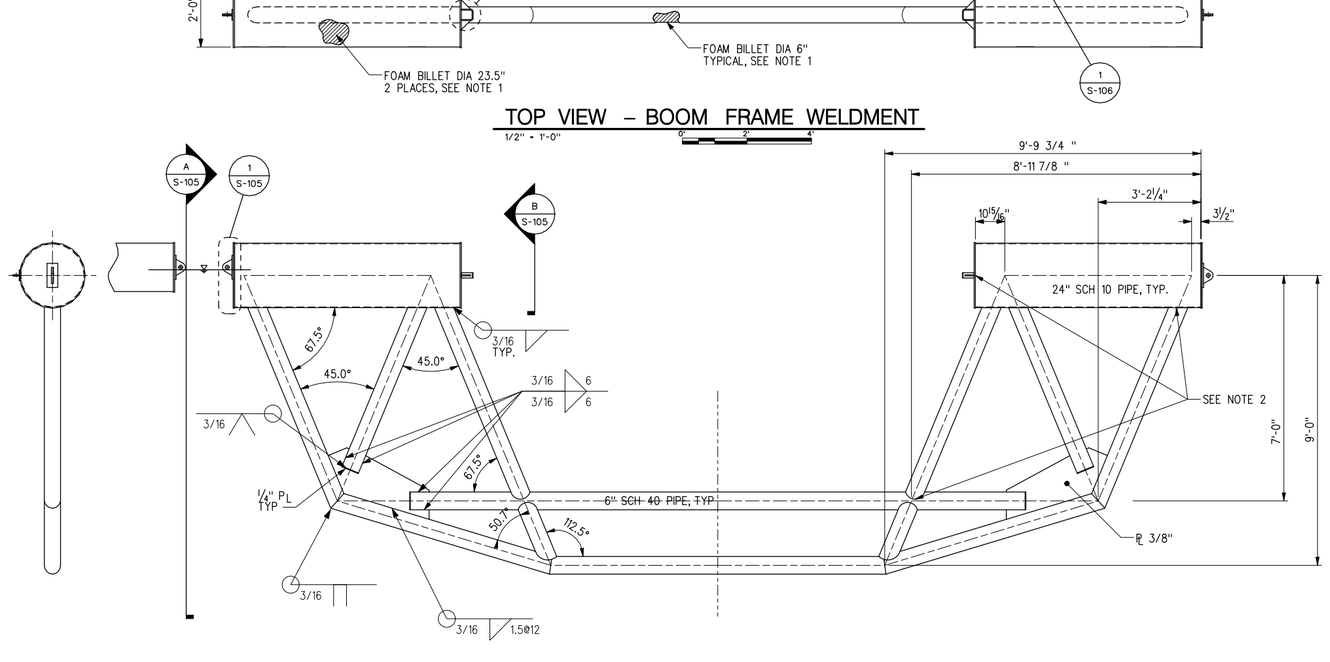

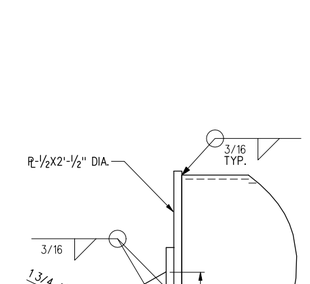

A SIDE VIEW – BOOM

1/2" = 1'-0"

FRONT VIEW– BOOM FRAME WELDMENT

1/2" = 1'-0"

1 FRAME END DETAIL

3" = 1'-0"

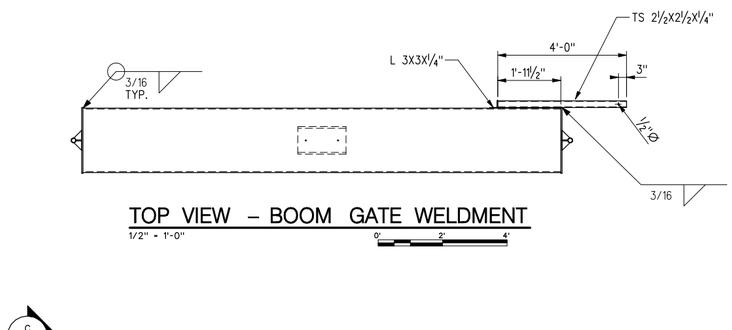

TOP VIEW – BOOM GATE WELDMENT

1/2" = 1'-0"

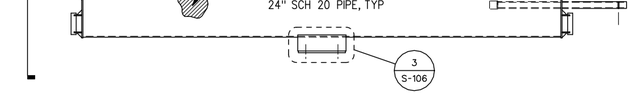

FRONT VIEW – BOOM GATE WELDMENT

1/2" = 1'-0"

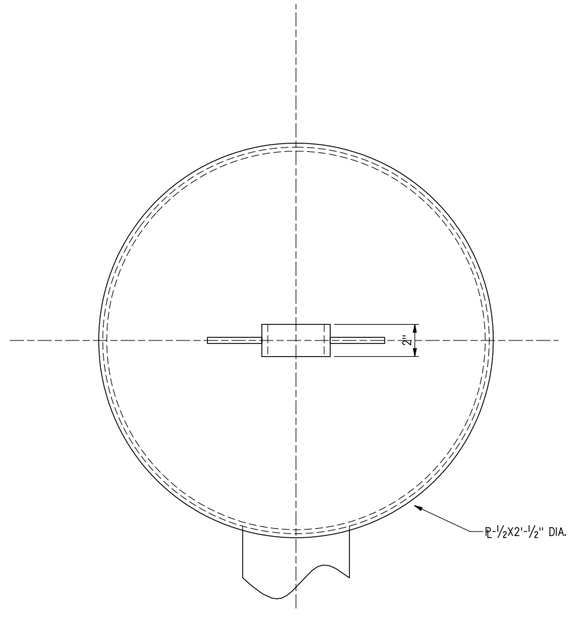

B END VIEW – BOOM FRAME WELDMENT

3" = 1'-0"

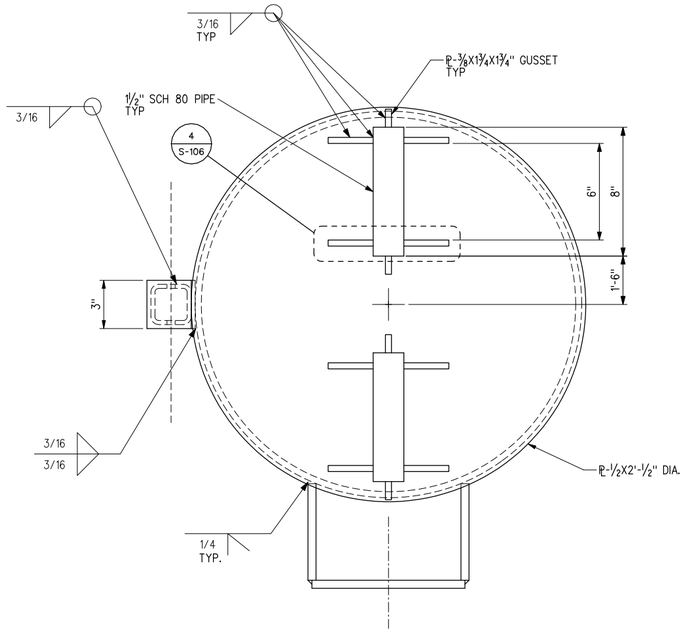

C END VIEW – BOOM GATE WELDMENT

3" = 1'-0"

NOTES:

1. INSTALL FOAM BILLET INSIDE FULL LENGTH OF PIPE. CONTRACTOR SHALL CONTROL HEAT OR PROVIDE SPACERS AT ENDS OF FOAM TO PREVENT COMBUSTION OR RELEASE OF TOXIC FUMES. MATERIAL - 1 LB. DENSITY BEADED POLYSTYRENE.

2. ALL WELDS CLOSING PIPE ENDS TO BE WATERTIGHT.

US Army Corps of Engineers
Seattle District

Symbol	Description	Appr.	Date
			/ /

Designed by: MCAVOY/NINNIS
Drawn by: MCAVOY/CHIHARA
Checked by: NOYES
Date: 16 MAR 06
File #
E-56-14-19
Rev.

U.S.ARMY ENGINEER DISTRICT SEATTLE
CORPS OF ENGINEERS
SEATTLE, WASHINGTON
Prepared by:

ADDITIONAL WATER STORAGE PROJECT
HOWARD HANSON DAM

DEBRIS GATE BOOM WELDMENTS

GREEN RIVER WASHINGTON

Plate number:
S-105
Sheet of

DESIGN FILE: F:\AEC\Designs\HHAW\Structural\HHAWS-1s-105.DGN
DATE AND TIME PLOTTED: 8/6/2008 12:01:07 PM

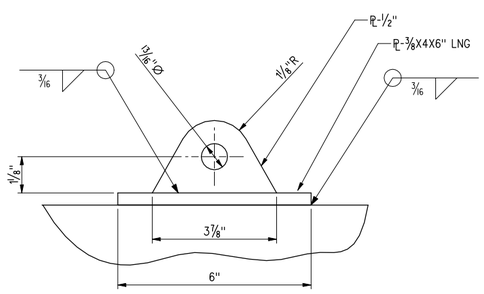

1 HINGE LUG – 1 REQ'D
6" - 1'-0"

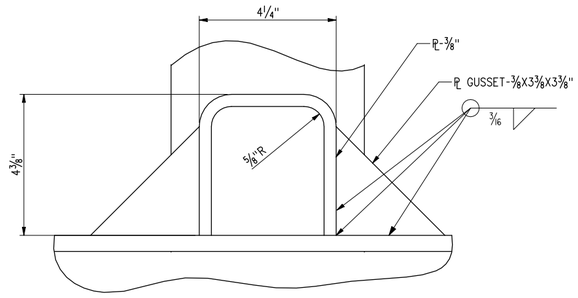

2 KEEPER – 2 REQ'D
6" - 1'-0"

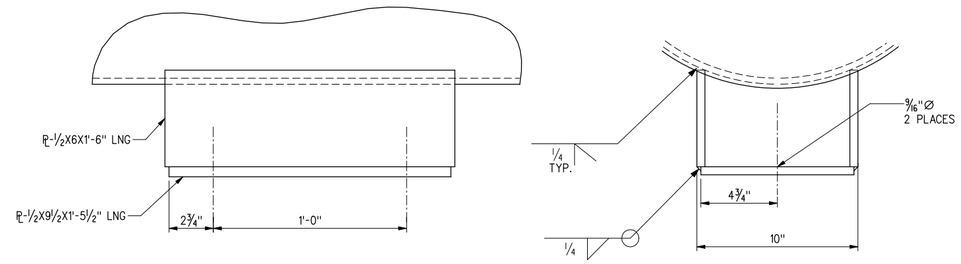

3 BALLAST MOUNT – 1 REQ'D
3" - 1'-0"

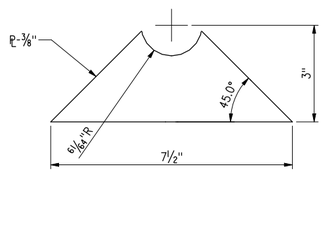

4 SUPPORT PLATE – 8 REQUIRED
6" - 1'-0"

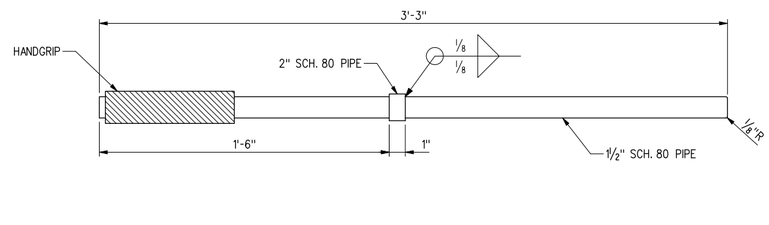

5 LATCH HANDLE – 2 REQ'D
3" - 1'-0"

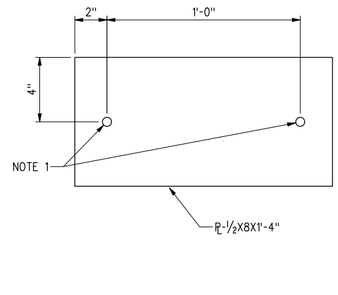

6 BALLAST PLATE – 6 REQ'D
3" - 1'-0"

NOTES:

1. 9/16"Ø HOLE (5 PLATES)
   DRILL AND TAP ½-13 UNC THREADS (1 PLATE)

US Army Corps of Engineers
Seattle District

Symbol	Description	Appr.	Date
			/ /

Designed by: MCAVOY
Drawn by: MCAVOY/CHIHARA
Checked by: NOYES
Date: 16 MAR 06
File #
Rev. E-56-14-19

U.S.ARMY ENGINEER DISTRICT,SEATTLE
CORPS OF ENGINEERS
SEATTLE, WASHINGTON
Prepared by:

ADDITIONAL WATER STORAGE PROJECT
HOWARD HANSON DAM
DEBRIS GATE BOOM DETAILS
GREEN RIVER WASHINGTON

Plate number:
S-106
Sheet of

FILE: I:\AEC\Designs\HHAW\Structural\HHAWS-1s-106.DGN
DESIGN FILE:
DATE AND TIME PLOTTED: 8/6/2008 12:01:14 PM

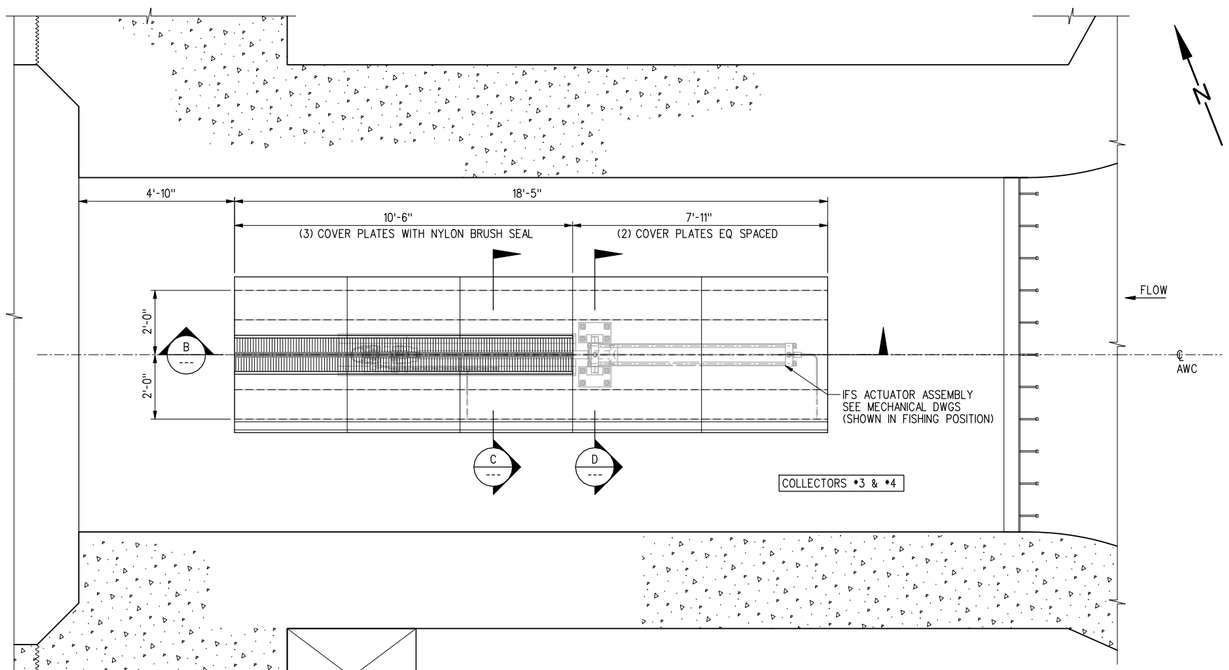

A IFS HYDRAULIC CYLINDER BLOCKOUT PLAN

1/2"=1'-0"

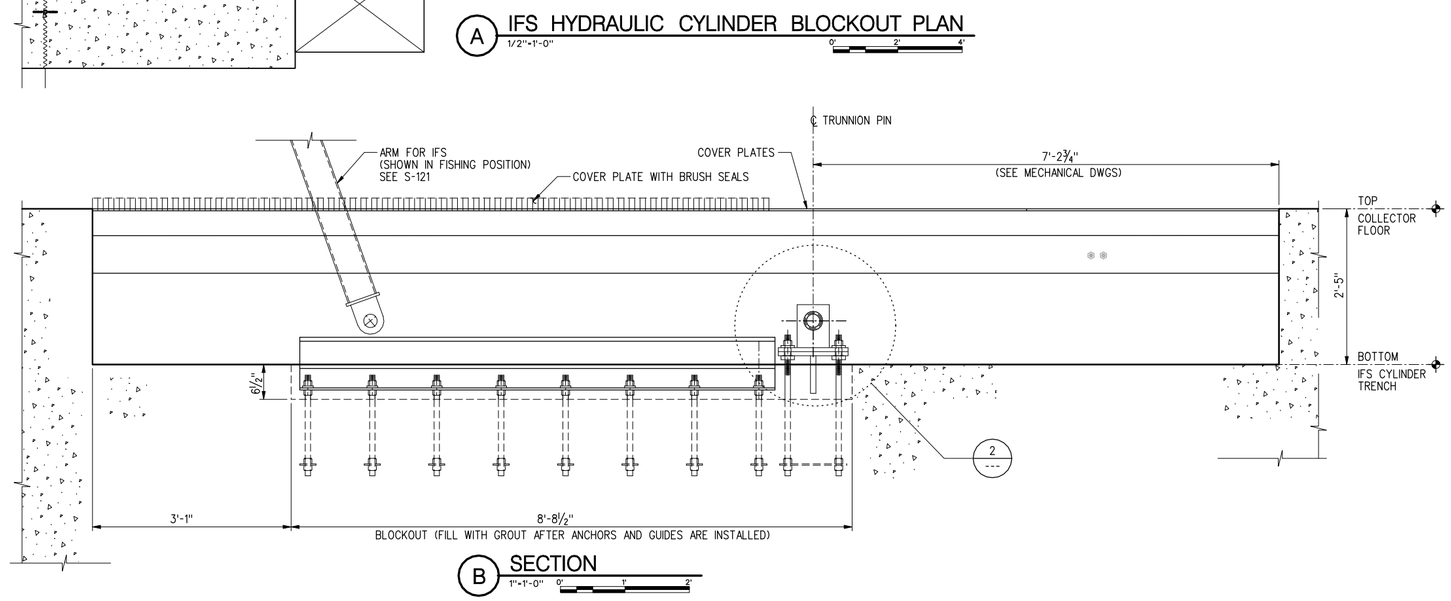

B SECTION

1"=1'-0"

NOTES:

1. INCLINED FISH SCREEN ASSEMBLY INCLUDING HYDRAULIC ACTUATORS FOR COLLECTOR #3 AND #4 AS SHOWN ON DETAILS.
2. FOR COLLECTORS #1, #2, AND #5 INSTALL EMBEDDED ANCHORAGE ONLY FOR HYDRAULIC ACTUATORS AND COVER PLATES TO BE INSTALLED IN A FUTURE CONTRACT.

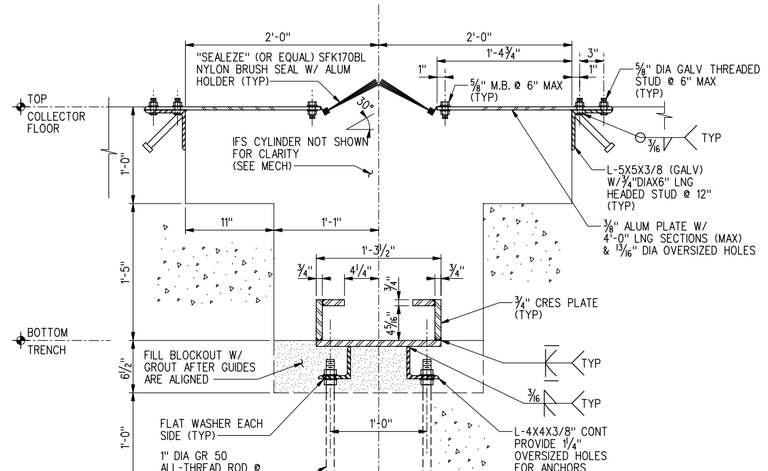

C SECTION THRU GUIDE PLATES

1½"=1'-0"

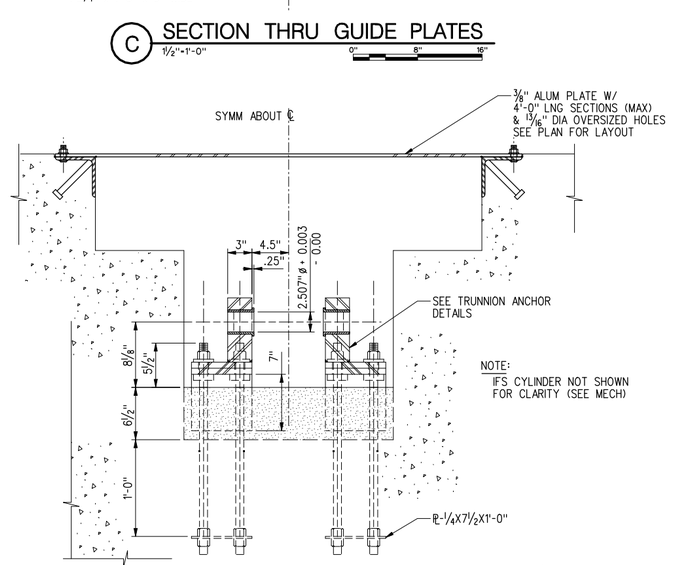

D SECTION THRU TRUNNION

1½"=1'-0"

SEE C FOR CALLOUTS NOT SHOWN ON THIS SECTION

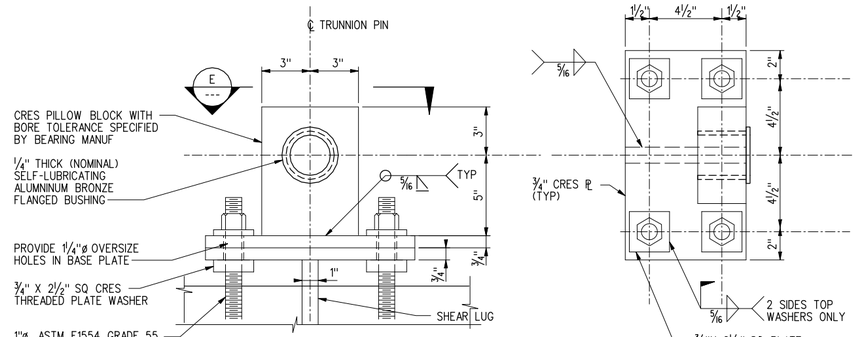

IFS HYDRAULIC CYLINDER TRUNNION ANCHORAGE DETAILS

3"=1'-0"

E – E

US Army Corps of Engineers
Seattle District

Description	Symbol	Appr.	Date
			/ /

U.S.ARMY ENGINEER DISTRICT,SEATTLE
CORPS OF ENGINEERS
SEATTLE, WASHINGTON
Prepared by:

Designed by:
Drawn by:
Checked by:
Date: 16 MAR 06
File #: E-56-14-19
Rev.

ADDITIONAL WATER STORAGE PROJECT
HOWARD HANSON DAM
GREEN RIVER

IFS HYDRAULIC CYLINDER SUPPORT DETAILS

WASHINGTON

Plate number:
S-120
Sheet of

P:\AECDesigns\HHAW\Structural\HHAWS-1s-120.DGN
DESIGN FILE:
12:01:19 PM
DATE AND TIME PLOTTED: 8/6/2008

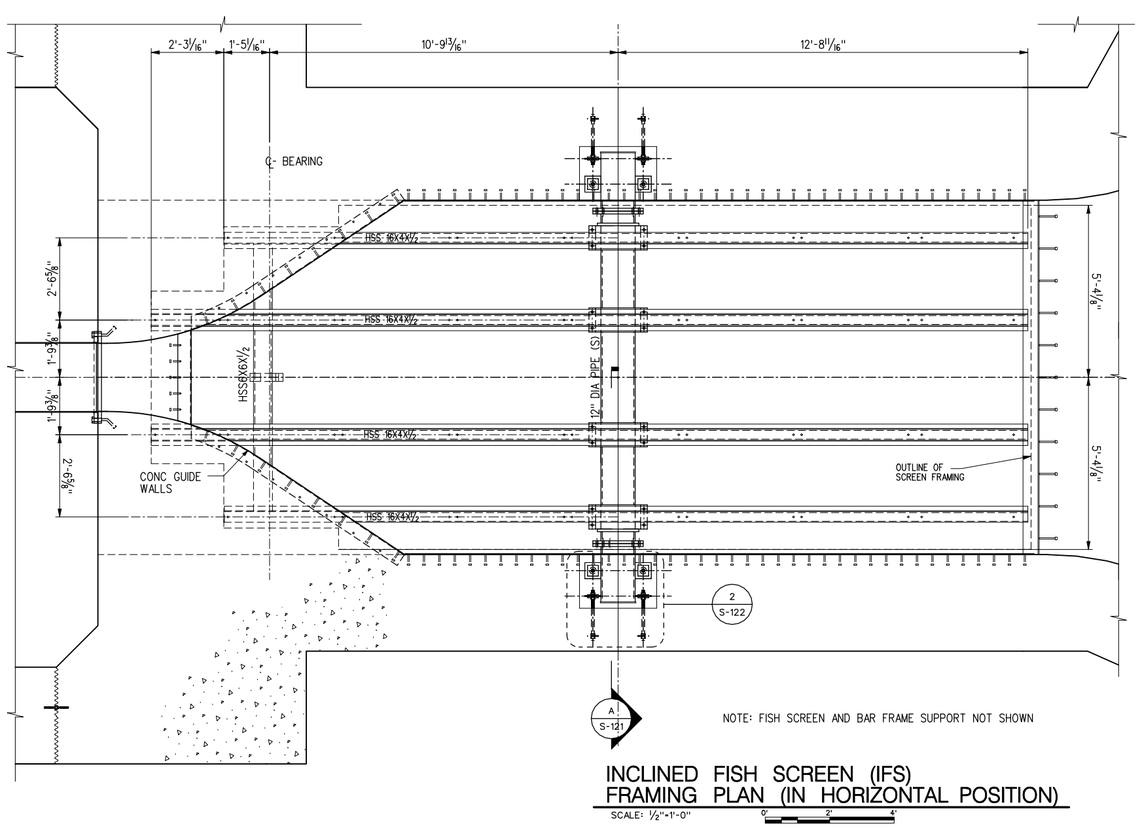

NOTE: FISH SCREEN AND BAR FRAME SUPPORT NOT SHOWN

INCLINED FISH SCREEN (IFS) FRAMING PLAN (IN HORIZONTAL POSITION)

SCALE: 1/2"=1'-0"

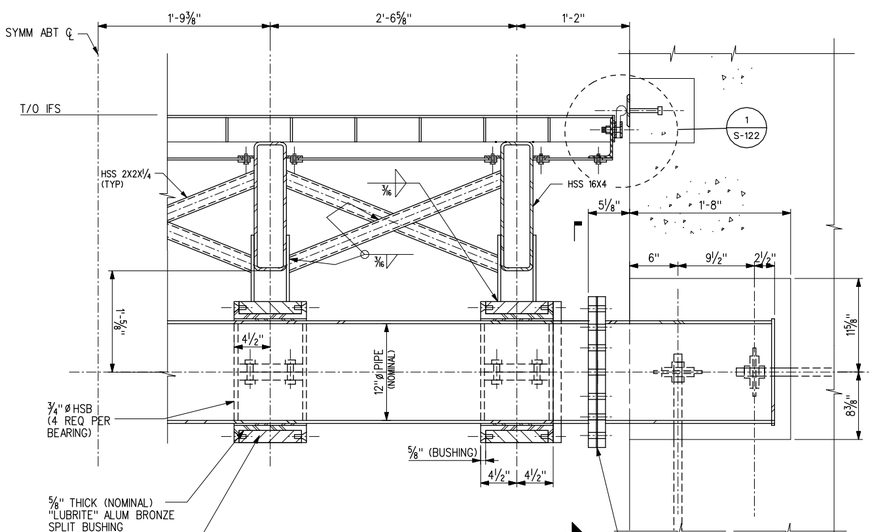

SECTION THRU IFS PIVOT BEAM BEARINGS

A SCALE: 1 1/2"=1'-0"

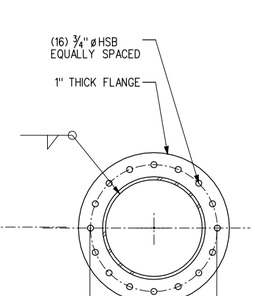

PIPE FLANGE CONNECTION

B 1 1/2"=1'-0"

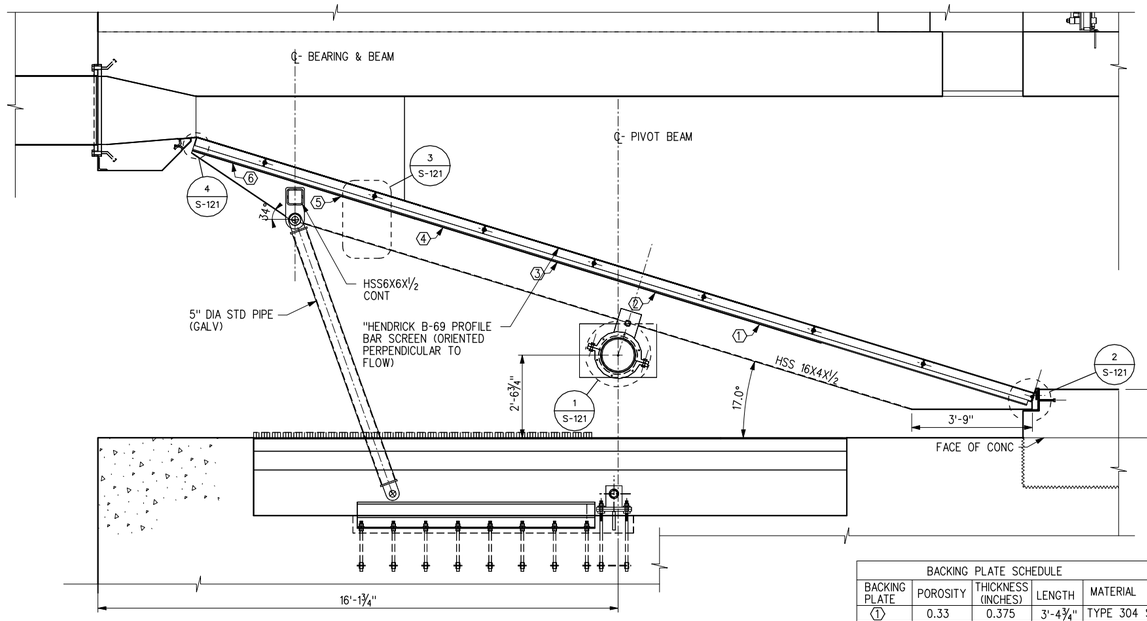

SECTION THRU INCLINED SCREEN FRAME

SCALE: 1/2"=1'-0"

BACKING PLATE SCHEDULE				
BACKING PLATE	POROSITY	THICKNESS (INCHES)	LENGTH	MATERIAL
①	0.33	0.375	3'-4 3/4"	TYPE 304 SS
②	0.33	0.375	3'-4 3/4"	TYPE 304 SS
③	0.23	0.313	3'-4 3/4"	TYPE 304 SS
④	0.23	0.313	3'-4 3/4"	TYPE 304 SS
⑤	0.23	0.313	3'-4 3/4"	TYPE 304 SS
⑥	0.15	0.313	3'-4 3/4"	TYPE 304 SS

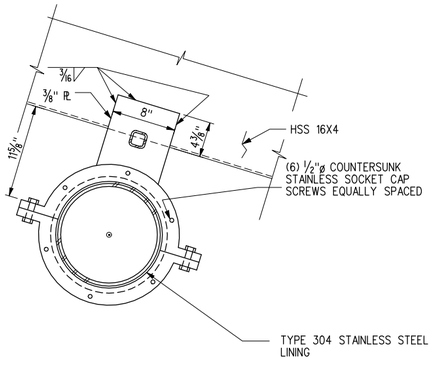

NOTE: SEE PLATE S-123 FOR ADDITIONAL INFO

1 BEARING DETAIL

SCALE: 1 1/2"=1'-0"

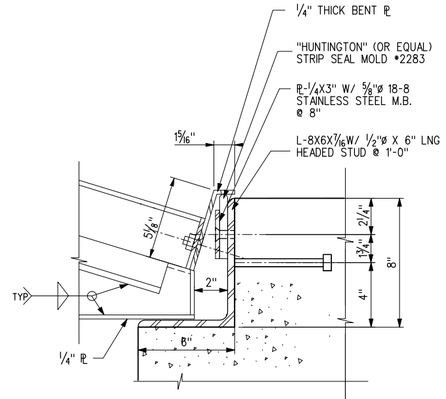

2 EDGE DETAIL

SCALE: 3"=1'-0"

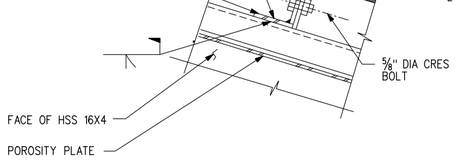

PROFILE BARS ORIENTED PERPENDICULAR TO FLOW

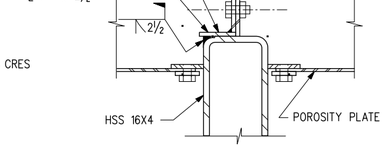

PROFILE BARS ORIENTED PARALLEL TO FLOW

3 TYPICAL SCREEN FRAME ANCHORAGE DETAILS

SCALE: 3"=1'-0"

US Army Corps of Engineers
Seattle District

Symbol	Description
Appr.	Symbol
/ /	Date

Date:	16 MAR 06
File #	E-56-14-19
Rev.	
Designed by:	BN
Drawn by:	BN
Checked by:	
Prepared by:	

U.S.ARMY ENGINEER DISTRICT,SEATTLE
CORPS OF ENGINEERS
SEATTLE, WASHINGTON

ADDITIONAL WATER STORAGE PROJECT
HOWARD HANSON DAM
GREEN RIVER WASHINGTON

INCLINED FISH SCREEN PLAN, SECTIONS & DETAILS - 1

Plate number:
S-121
Sheet of

P:\AECDesigns\VHAW\Structural\HAWS-1s-121.DGN
DESIGN FILE:
12:01:30 PM
DATE AND TIME PLOTTED: 8/6/2008



RUBBER J-SEAL DETAIL

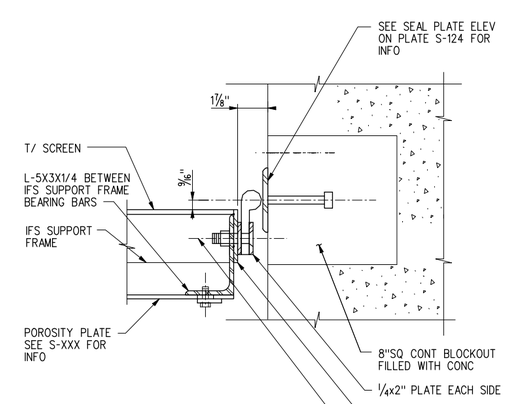

1 IFS SIDE SEAL DETAIL
3"=1'-0"

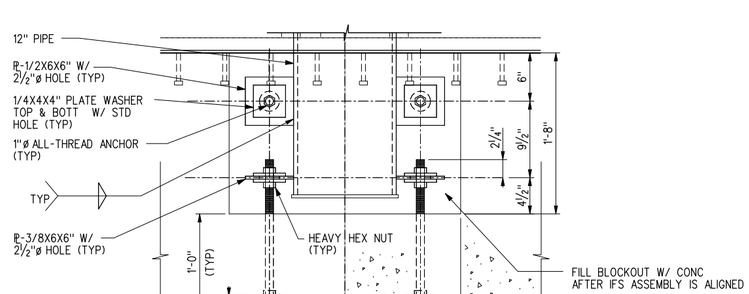

2 DETAIL
1 1/2"=1'-0"

FRAME ORIENTATION FOR PARALLEL TO FLOW SCREEN PROFILE BARS

FRAME ORIENTATION FOR PERPENDICULAR TO FLOW SCREEN PROFILE BARS

1/4"X3" STEEL FLAT BAR @ 8"

3 FISH SCREEN SUPPORT FRAMING PLANS
1/2" = 1'-0"

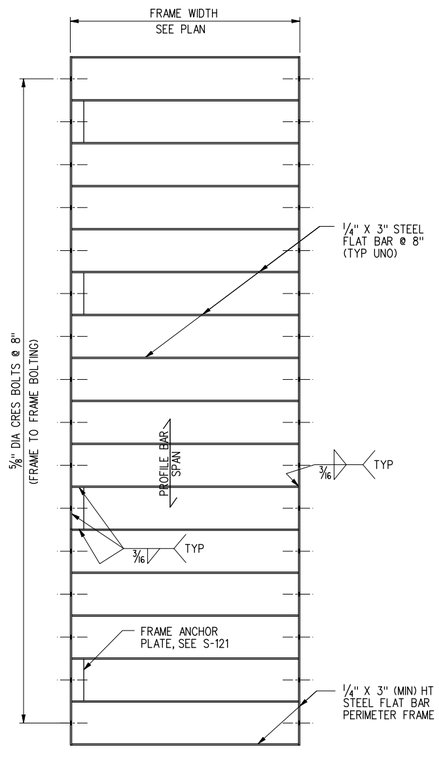

4 TYPICAL FRAME MODULE FOR SCREEN PROFILE BARS PERPENDICULAR TO FLOW
1"=1'-0"

NOTE: SEE FISH SCREEN SUPPORT FRAMING PLANS FOR ADDITIONAL ANCHORS REQUIRED FOR PARALLEL TO FLOW SCREEN PROFILE BARS

US Army Corps of Engineers
Seattle District

Symbol	Description
Appr.	Symbol
/ /	Date
	Description

Designed by:
Drawn by: BN
Checked by:
Prepared by:

Date: 16 MAR 06
File # E-56-14-19
Rev.

U.S.ARMY ENGINEER DISTRICT,SEATTLE
CORPS OF ENGINEERS
SEATTLE, WASHINGTON

ADDITIONAL WATER STORAGE PROJECT
HOWARD HANSON DAM
GREEN RIVER WASHINGTON

INCLINED FISH SCREEN PLAN SECTIONS & DETAILS II

Plate number: S-122
Sheet of

DESIGN FILE: P:\AEC\Designs\HHAW\Structural\HHAWS-1s-122.DGN
DATE AND TIME PLOTTED: 8/6/2008 12:01:42 PM

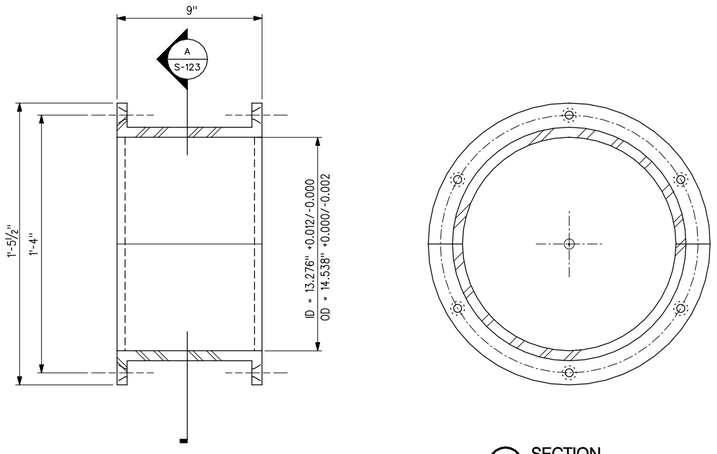

A SECTION

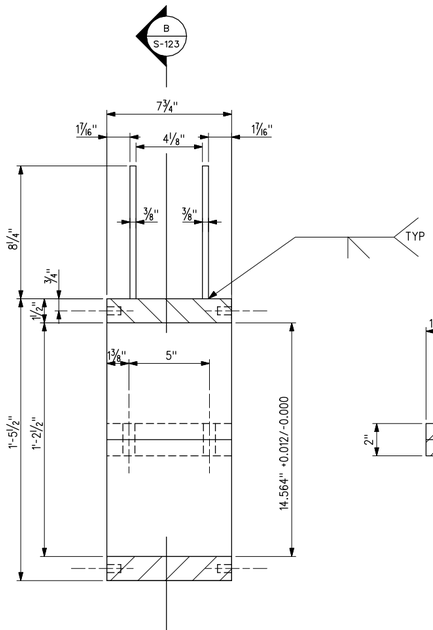

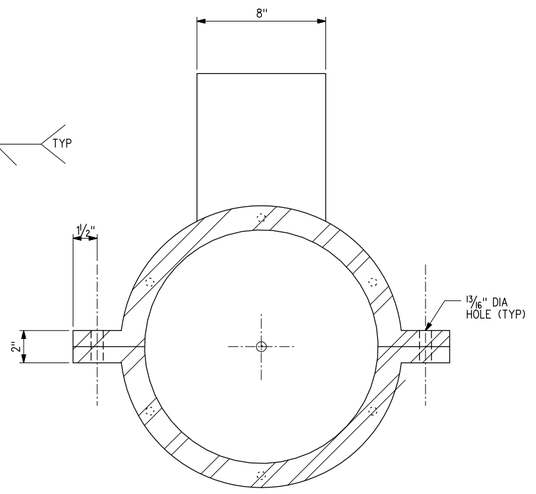

B SECTION

1 BEARING DETAILS

SCALE: 3"=1'-0" 0" 4" 8"

NOTE: BEARING SHALL BE SPLIT TYPE CONFORMING TO ALUMINUM BRONZE ("LUBRITE" ALLOY #417 OR EQUAL)

2 HUB DETAILS

SCALE: 3"=1'-0" 0" 4" 8"

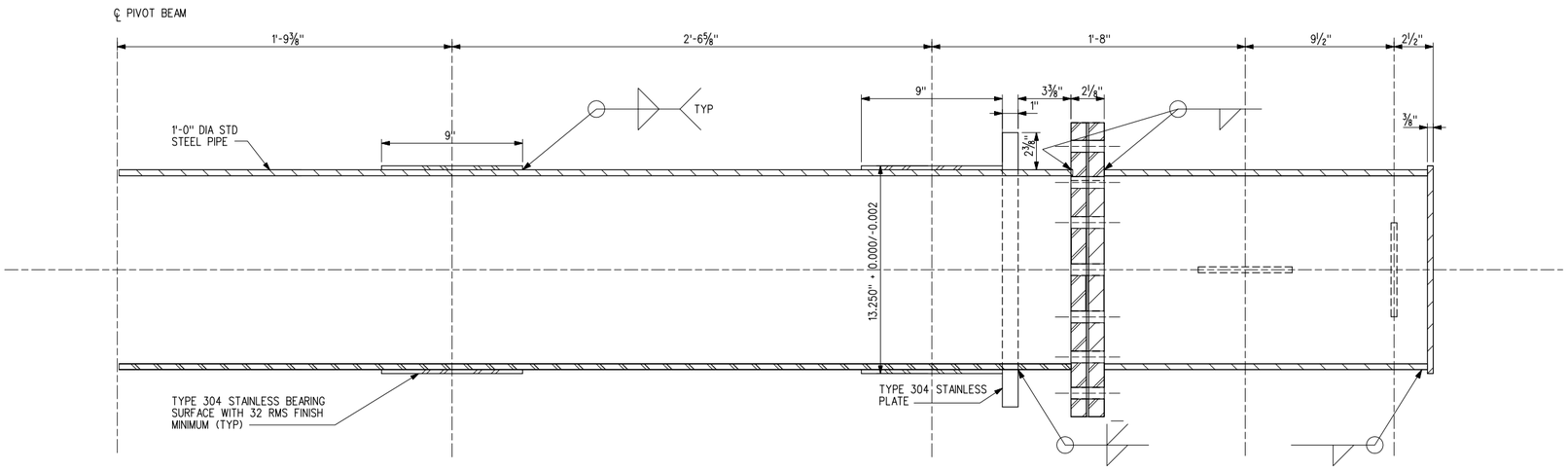

PIVOT BEAM SECTION

SCALE: 3"=1'-0" 0" 4" 8"

US Army Corps of Engineers
Seattle District

Symbol	Description	Appr.	Date
			/ /

Designed by: BN
Drawn by: BN
Checked by:
Prepared by:
Date: 16 MAR 06
File #: E-56-14-19
Rev.

U.S.ARMY ENGINEER DISTRICT,SEATTLE
CORPS OF ENGINEERS
SEATTLE, WASHINGTON

ADDITIONAL WATER STORAGE PROJECT
HOWARD HANSON DAM
INCLINED FISH SCREEN PLAN, SECTIONS & DETAILS - III
GREEN RIVER WASHINGTON

Plate number:
S-123
Sheet of

FILE: I:\AEC\Designs\HHAW\Structural\HHAWS-1s-123.DGN
DESIGN FILE:
DATE AND TIME PLOTTED: 8/6/2008 12:01:50 PM

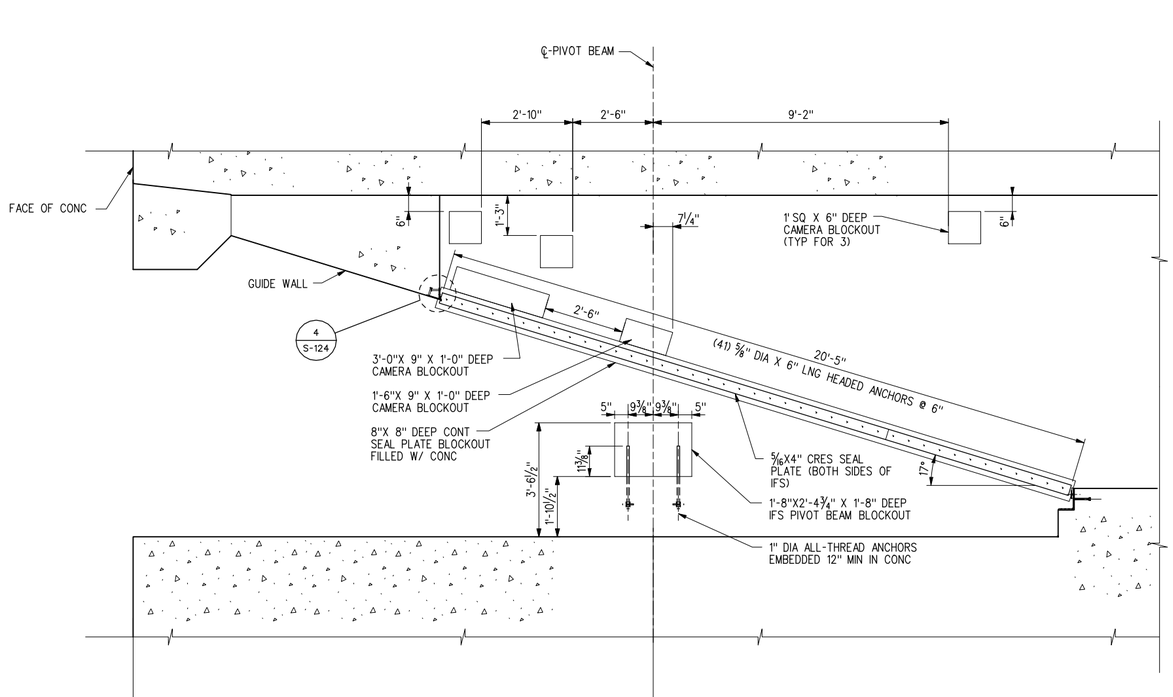

TYPICAL IFS SIDE SEAL PLATE ANCHORAGE AND BLOCKOUT DETAIL

1½"=1'-0"

NOTE: CAMERA BLOCKOUTS SHALL BE PROVIDED IN EACH COLLECTOR AT ONE SIDE OF IFS ONLY

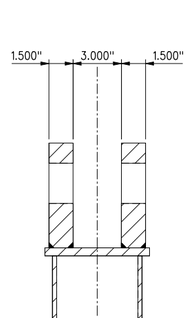

A SECTION

3"=1'-0"

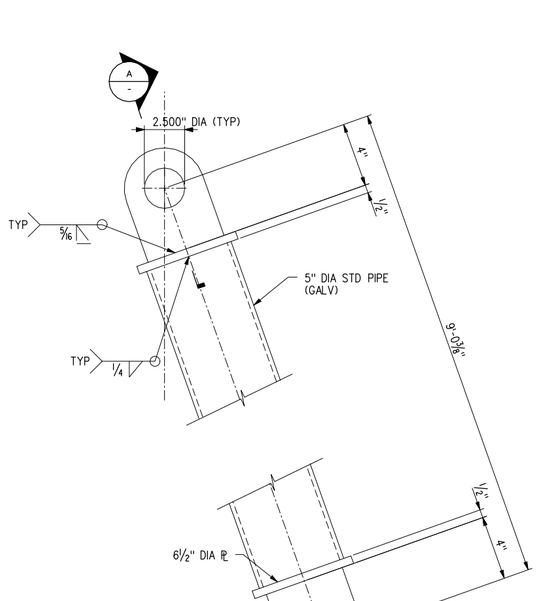

1 LINK ARM DETAIL

3"=1'-0"

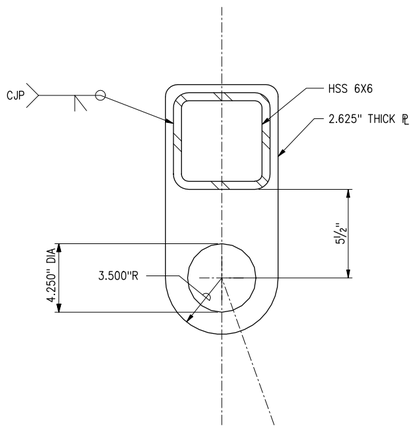

2 DETAIL

3"=1'-0"

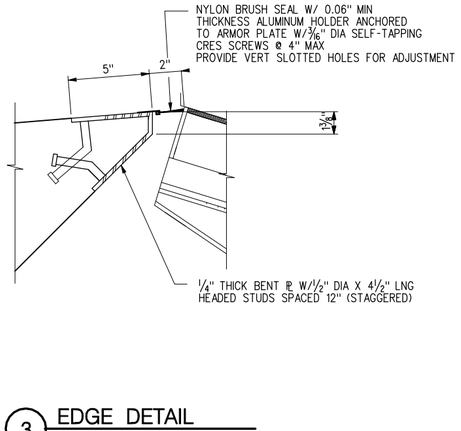

3 EDGE DETAIL

3"=1'-0"

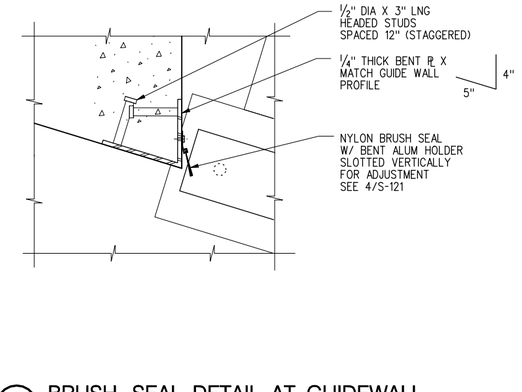

4 BRUSH SEAL DETAIL AT GUIDEWALL

3"=1'-0"

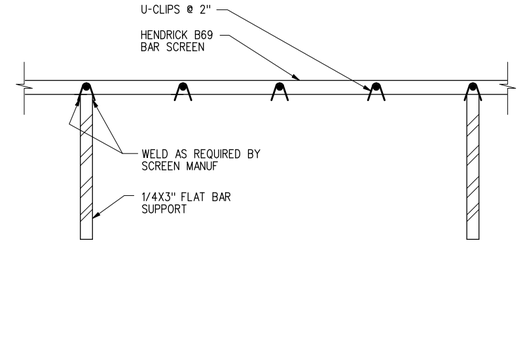

5 FISH SCREEN DETAIL

NONE

US Army Corps of Engineers
Seattle District

Symbol	Description	Appr.	Date
			/ /

Designed by: BN
Drawn by: BN
Checked by:
Date: 16 MAR 06
File #: E-56-14-19
Rev.

U.S.ARMY ENGINEER DISTRICT,SEATTLE
CORPS OF ENGINEERS
SEATTLE, WASHINGTON
Prepared by:

ADDITIONAL WATER STORAGE PROJECT
HOWARD HANSON DAM
GREEN RIVER WASHINGTON

INCLINED FISH SCREEN DETAILS

Plate number: S-124
Sheet of

DESIGN FILE: F:\AECDesigns\HHAW\Structural\HHAWS-1s-124.DGN
DATE AND TIME PLOTTED: 8/6/2008 12:01:53 PM

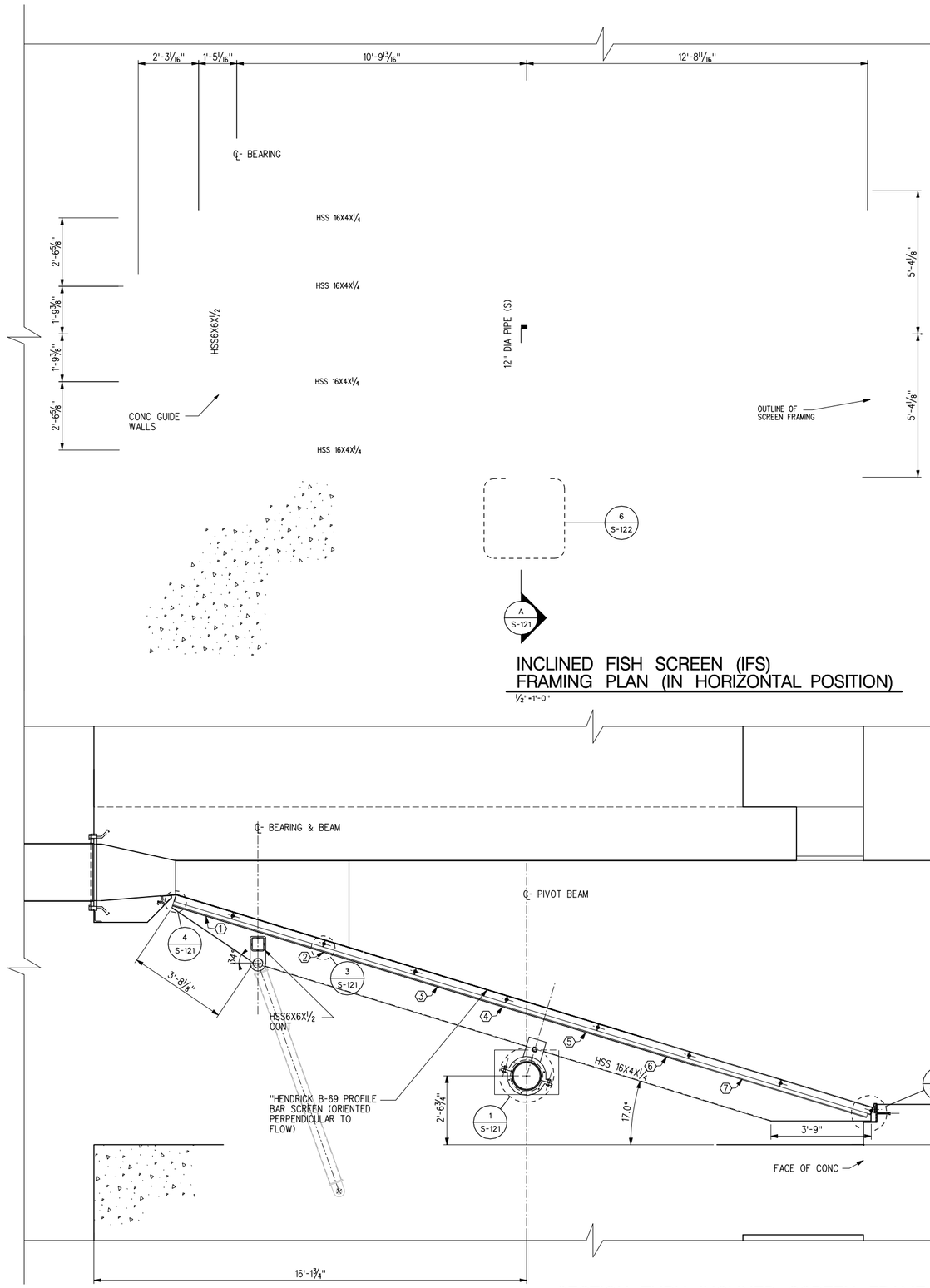

INCLINED FISH SCREEN (IFS) FRAMING PLAN (IN HORIZONTAL POSITION)

1/2"=1'-0"

SECTION THRU INCLINED SCREEN FRAME

1/2"=1'-0"

(X) PERFORATED PLATE NUMBER SEE SCHEDULE ON SHEET S-XXX FOR ADDITIONAL INFO

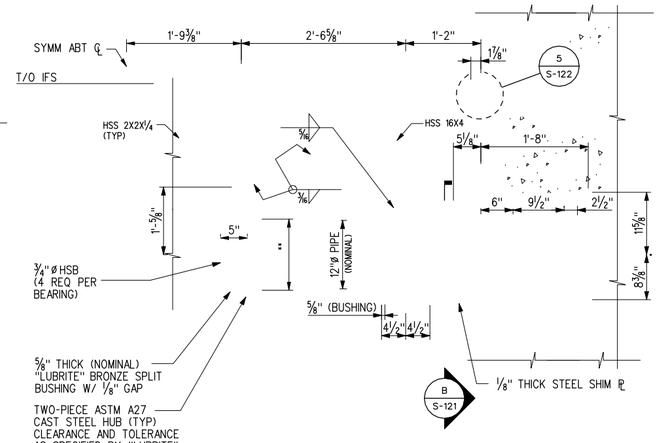

A SECTION THRU IFS PIVOT BEAM BEARINGS

1"=1'-0"

** 9" WIDE TYPE 304 STAINLESS STEEL LINING WELDED TO PIPE & MACHINED TO OVERALL O.D. = 13.25 ± 0.002" RMS = 32

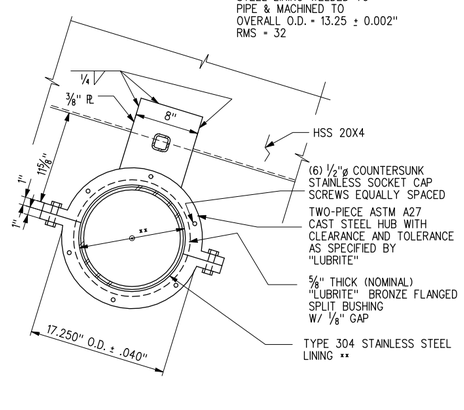

B PIPE FLANGE CONNECTION

1"=1'-0"

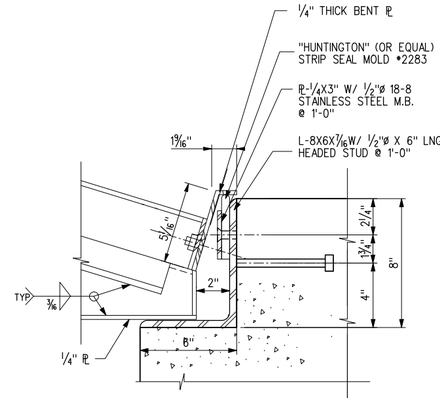

1 BEARING DETAIL

1 1/2"=1'-0"

** 9" WIDE TYPE 304 STAINLESS STEEL LINING WELDED TO PIPE & MACHINED TO OVERALL O.D. = 13.25 ± 0.002" RMS = 32

2 EDGE DETAIL

3"=1'-0"

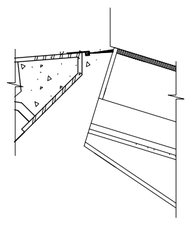

3 TYPICAL SCREEN BEARING BAR SUPPORT DETAIL

3"=1'-0"

4 EDGE DETAIL

3"=1'-0"

US Army Corps of Engineers
Seattle District

Symbol	Description
Appr.	
Date	/ /

Designed by: BN
Drawn by: BN
Checked by:
Prepared by:

U.S.ARMY ENGINEER DISTRICT,SEATTLE
CORPS OF ENGINEERS
SEATTLE, WASHINGTON

Date: 16 MAR 06
File #
E-56-14-19
Rev.

ADDITIONAL WATER STORAGE PROJECT
HOWARD HANSON DAM
GREEN RIVER WASHINGTON

INCLINED FISH SCREEN PLAN, SECTIONS & DETAILS

Plate number: S-121
Sheet of

FILE: I:\AEC\Designs\HHAW\Structural\HHAWS-1s-124.DGN
DESIGN FILE:
DATE AND TIME PLOTTED: 8/6/2008 12:01:59 PM

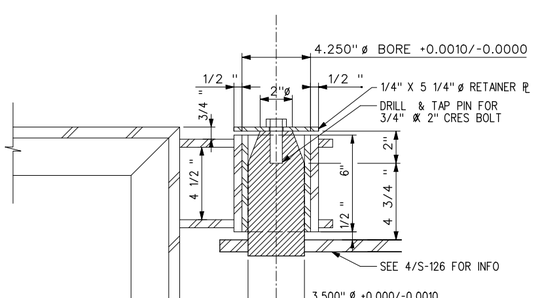

SECTION A' - A'

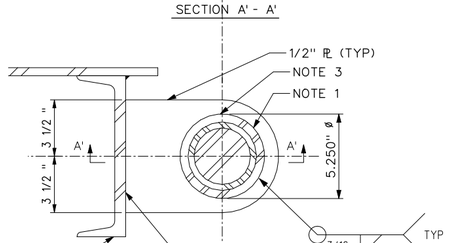

1 UPPER HINGE DETAILS

1 1/2"=1'-0"

1. "LUBRITE" (OR EQUAL) 0.375" THICK (NOMINAL) ALUMNINUM BRONZE SELF-LUBRICATING BUSHING W/ 0.016" CLEARANCE BETWEEN INSIDE DIAMETER OF BUSHING AND PIN.
2. "LUBRITE" (OR EQUAL) 1/2" THICK (NOMINAL) ALUMNINUM BRONZE SELF-LUBRICATING THRUST WASHER.
3. THE HUBS SHALL CONFORM TO ASTM A27 CAST STEEL OR A668 STEEL FORGING.
4. THE HINGE PINS SHALL CONFORM TO ASTM A276 TYPE XM-19 STAINLESS STEEL AND MACHINED TO 63 RMS SURFACE FINISH.

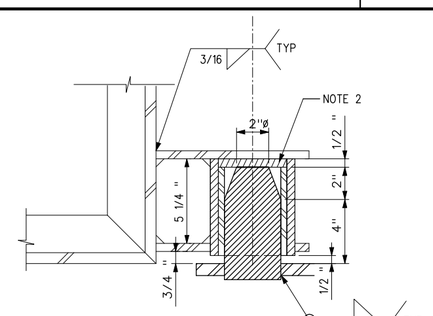

SECTION B' - B'

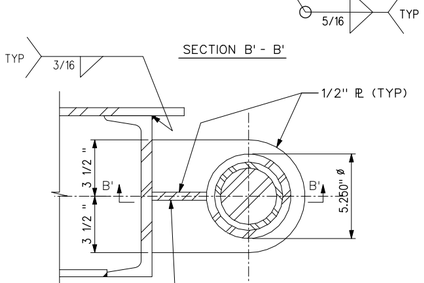

2 LOWER HINGE DETAILS

1 1/2"=1'-0"

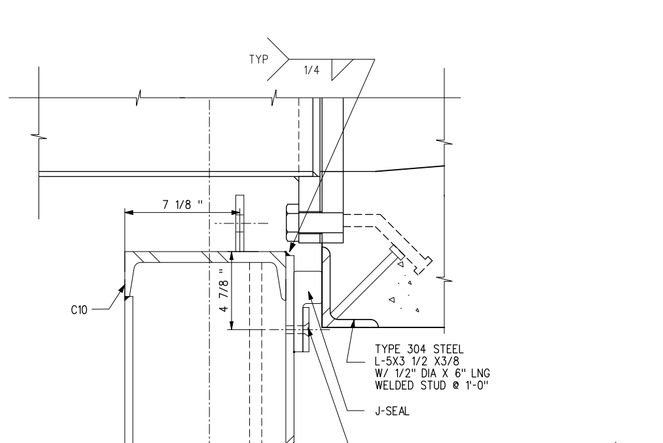

3 DETAIL

3"=1'-0"

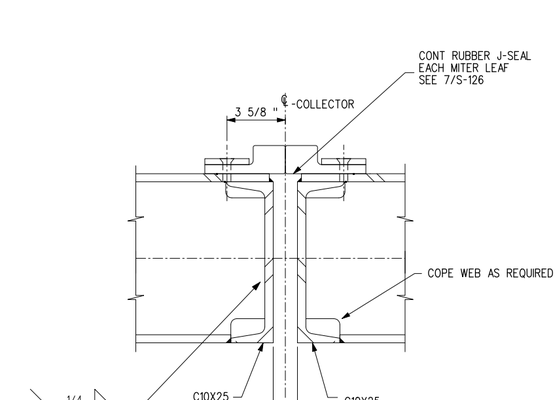

4 SEAL DETAIL

1 1/2"=1'-0"

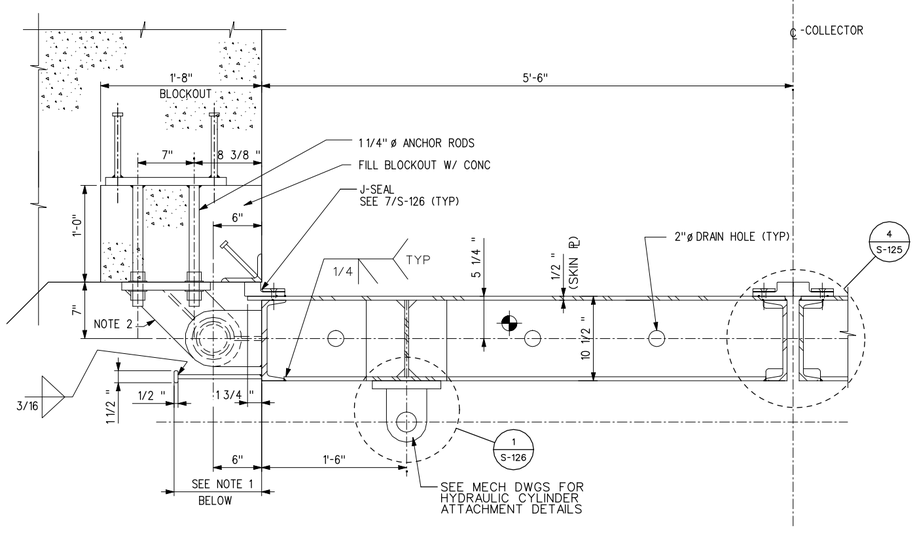

A SECTION

3/4"=1'-0"

1. STAINLESS STEEL GRADE 17-4 PROXIMITY BRACKET. COORDINATE LENGTH OF PROXIMITY SENSOR BRACKET WITH SENSOR SUPPLIER
2. SEE DETAILS 3 & 4 ON PLATE S-126 FOR INFO.

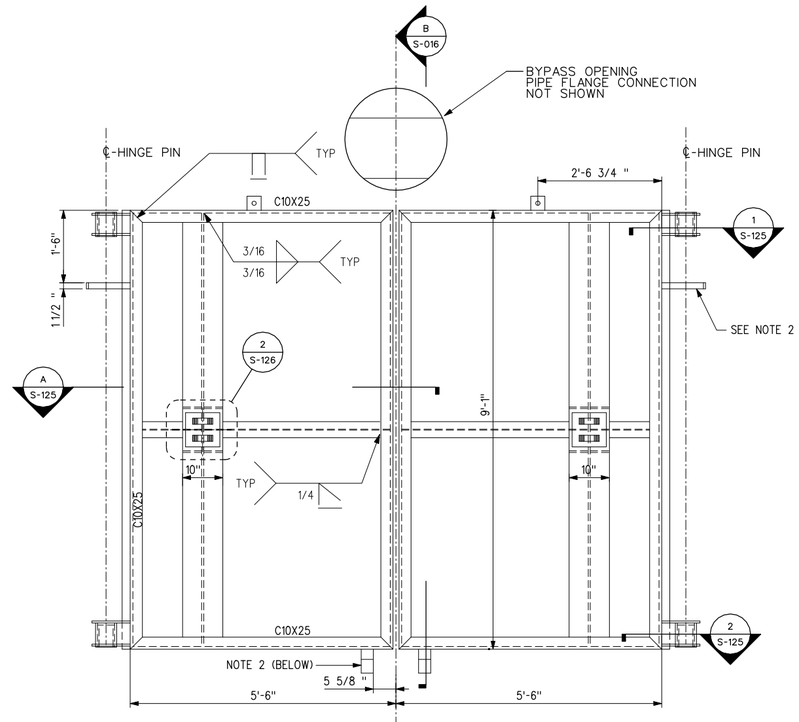

5 TYPICAL MITER GATE ELEVATION (LOOKING UPSTREAM)

3/4"=1'-0"

1. SEE PLATE S-126 FOR HINGE MOUNTING BRACKET ASSEMBLY NOT SHOWN.
2. STAINLESS STEEL GRADE 17-4 PROXIMITY SENSOR BRACKET (SEE MECH DWGS FOR ADDITIONAL INFO)

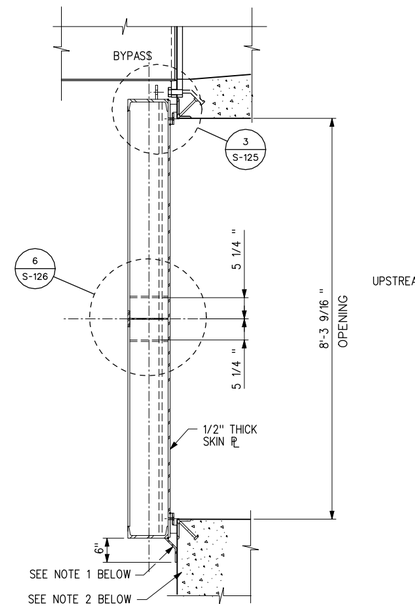

B SECTION THRU MITER GATE

3/4"=1'-0"

1. 3/8" THICK X 3" WIDE BENT STAINLESS STEEL GRADE 17-4 PLATE WELDED TO GATE.
2. PROVIDE BLOCKOUT IN WALL FOR PROXIMITY SENSOR PER MANUF RECOMMENDATION. SEE MECH DWGS FOR ADDITIONAL INFO

US Army Corps of Engineers
Seattle District

Symbol	Description
Appr.	Date

Designed by: NINNIS
Drawn by:
Checked by:
Prepared by:
Date: 16 MAR 06
File #: E-56-14-19
Rev.

U.S. ARMY ENGINEER DISTRICT, SEATTLE
CORPS OF ENGINEERS
SEATTLE, WASHINGTON

ADDITIONAL WATER STORAGE PROJECT
HOWARD HANSON DAM
GREEN RIVER WASHINGTON

MITER GATE DETAILS I

Plate number: S-125
Sheet of

DESIGN FILE: P:\AECDesigns\HHAWS\Structural\HHAWS-1s-125.DGN
DATE AND TIME PLOTTED: 8/6/2008 12:02:10 PM

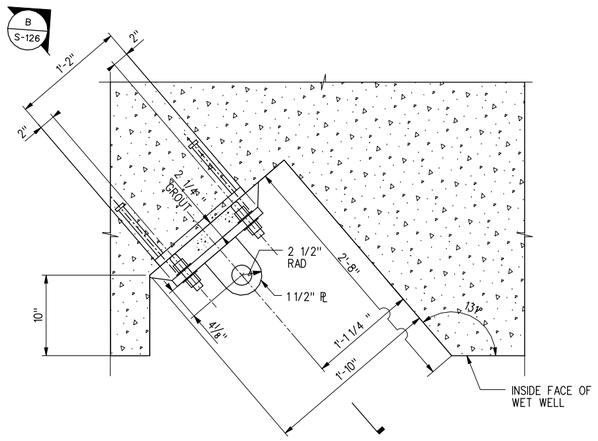

A CYLINDER BRACKET ANCHORAGE
1 1/2"=1'-0"

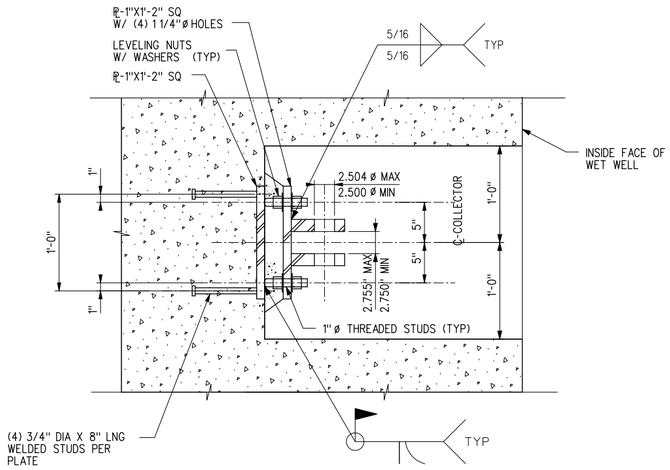

B SECTION
1 1/2"=1'-0"

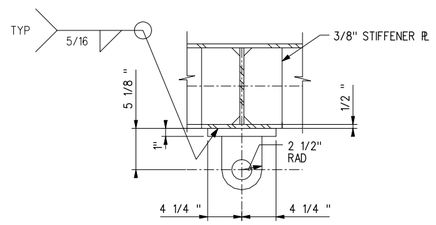

1 MITER GATE BRACKET DETAIL
1 1/2"=1'-0"

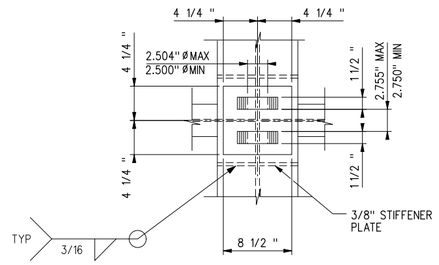

2 MITER GATE BRACKET DETAIL
1 1/2"=1'-0"

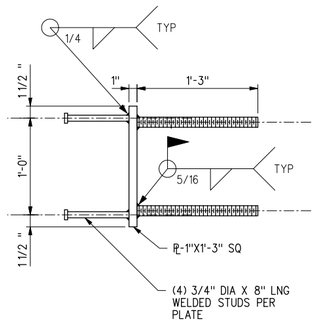

3 MITER GATE ANCHORAGE PLATE
1 1/2"=1'-0"

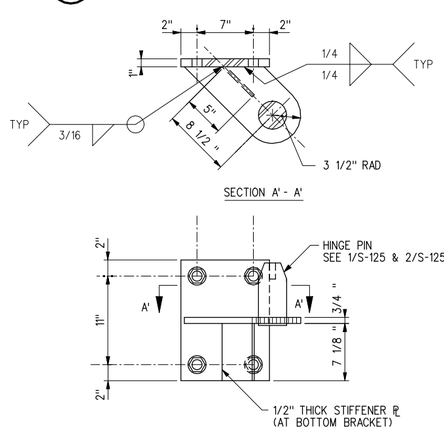

4 MITER GATE BRACKET
1 1/2"=1'-0"

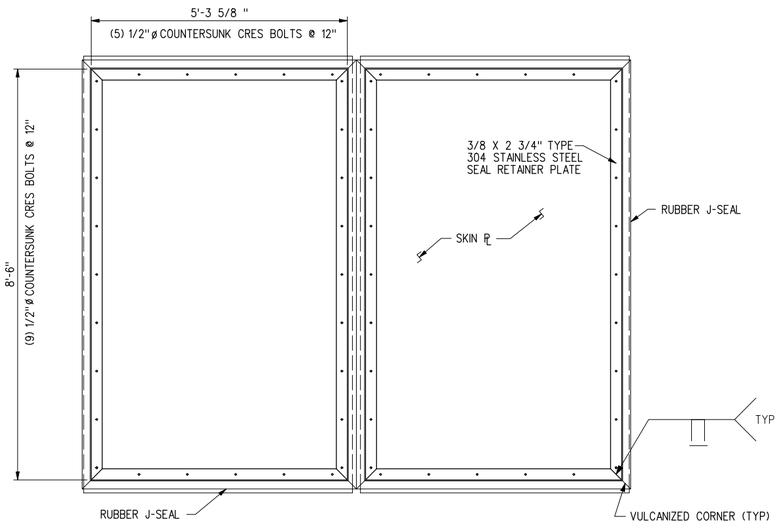

5 MITER GATE SEAL PLATE ELEVATION (LOOKING DOWNSTREAM)
3/4"=1'-0"

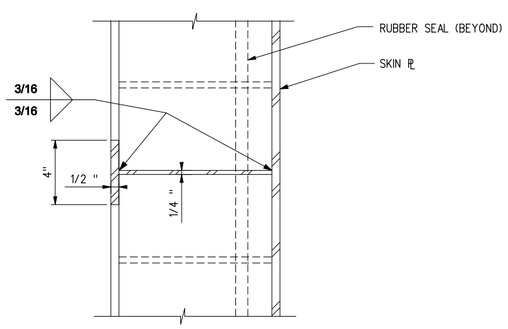

6 DETAIL
3"=1'-0"

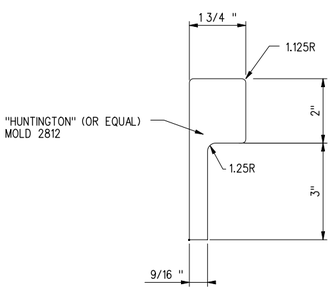

7 J-SEAL DETAIL
SCALE: NONE

US Army Corps of Engineers
Seattle District

Symbol	Date	Description
	/ /	

Designed by: NINNIS
Drawn by:
Checked by:
Prepared by:
Date: 16 MAR 06
File #
Rev. E-56-14-19

U.S.ARMY ENGINEER DISTRICT,SEATTLE
CORPS OF ENGINEERS
SEATTLE, WASHINGTON

ADDITIONAL WATER STORAGE PROJECT
HOWARD HANSON DAM
MITER GATE SECTIONS AND DETAILS
GREEN RIVER WASHINGTON

Plate number:
S-126
Sheet of

I:\AEC\Designs\HHAW\Structural\HHAWS-1s-126.DGN
DESIGN FILE:
12:02:13 PM
DATE AND TIME PLOTTED: 8/6/2008

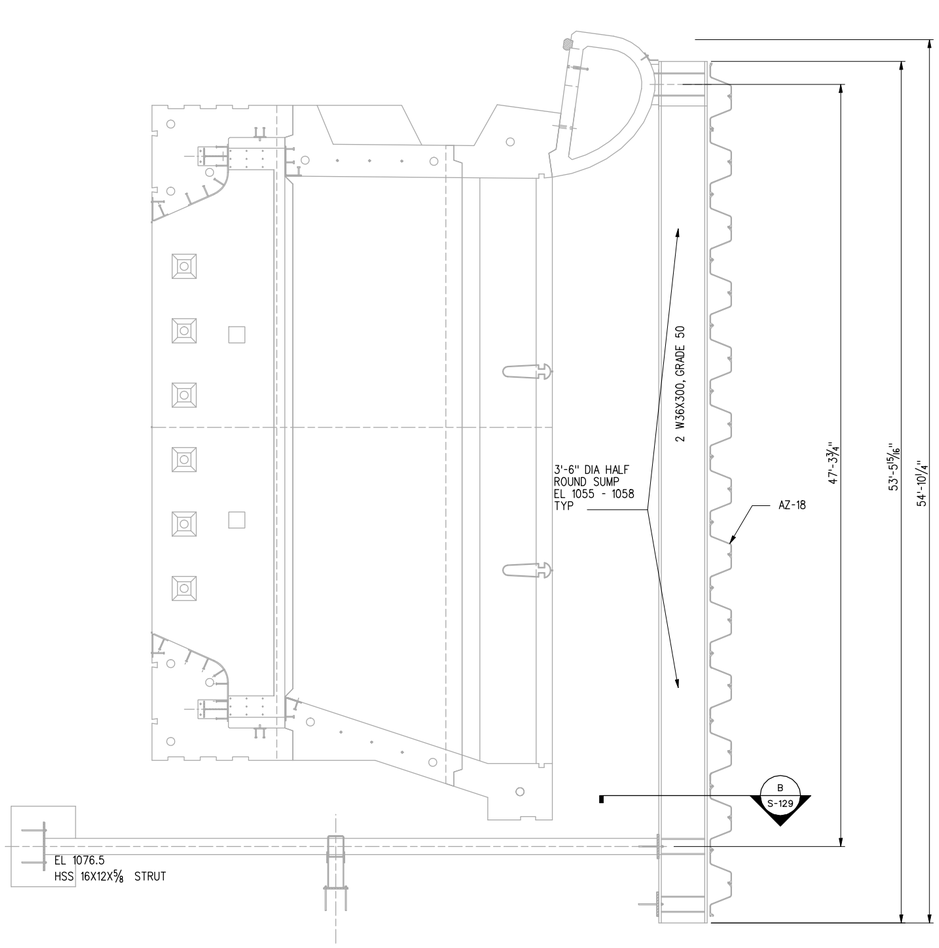

DEWATERING BULKHEAD DEMOLITION PLAN

1/4"=1'-0" 0' 4' 8'

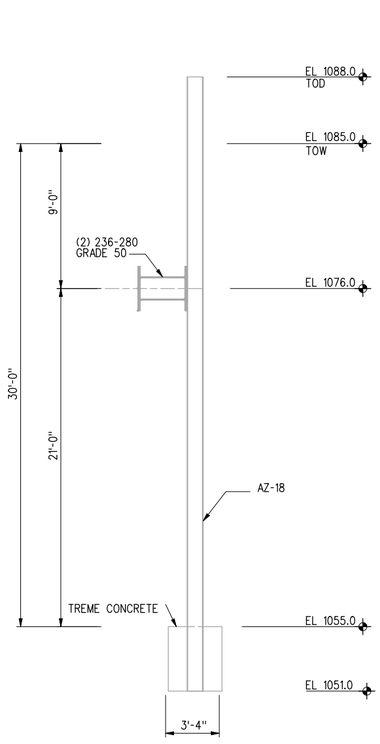

A SECTION

1/4"=1'-0" 0' 4' 8'

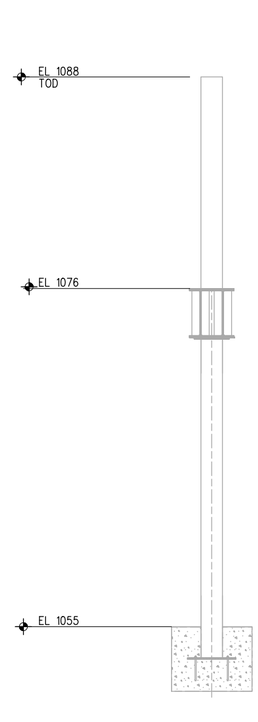

B SECTION

1/4"=1'-0" 0' 4' 8'

US Army Corps of Engineers
Seattle District

Symbol	Description	Appr.	Date
			/ /

Designed by: X
Drawn by: X
Checked by: X

Date: 16 MAR 06
File # E-56-14-19
Rev.

U.S.ARMY ENGINEER DISTRICT,SEATTLE
CORPS OF ENGINEERS
SEATTLE, WASHINGTON
Prepared by:

ADDITIONAL WATER STORAGE PROJECT
HOWARD HANSON DAM
DEWATERING BULKHEAD DEMOLITION PLAN
GREEN RIVER WASHINGTON

Plate number:
S-129
Sheet of

DATE AND TIME PLOTTED: 8/6/2008 12:02:16 PM DESIGN FILE: F:\AECDesigns\HHAW\Structural\HHAWS-1s-129.DGN

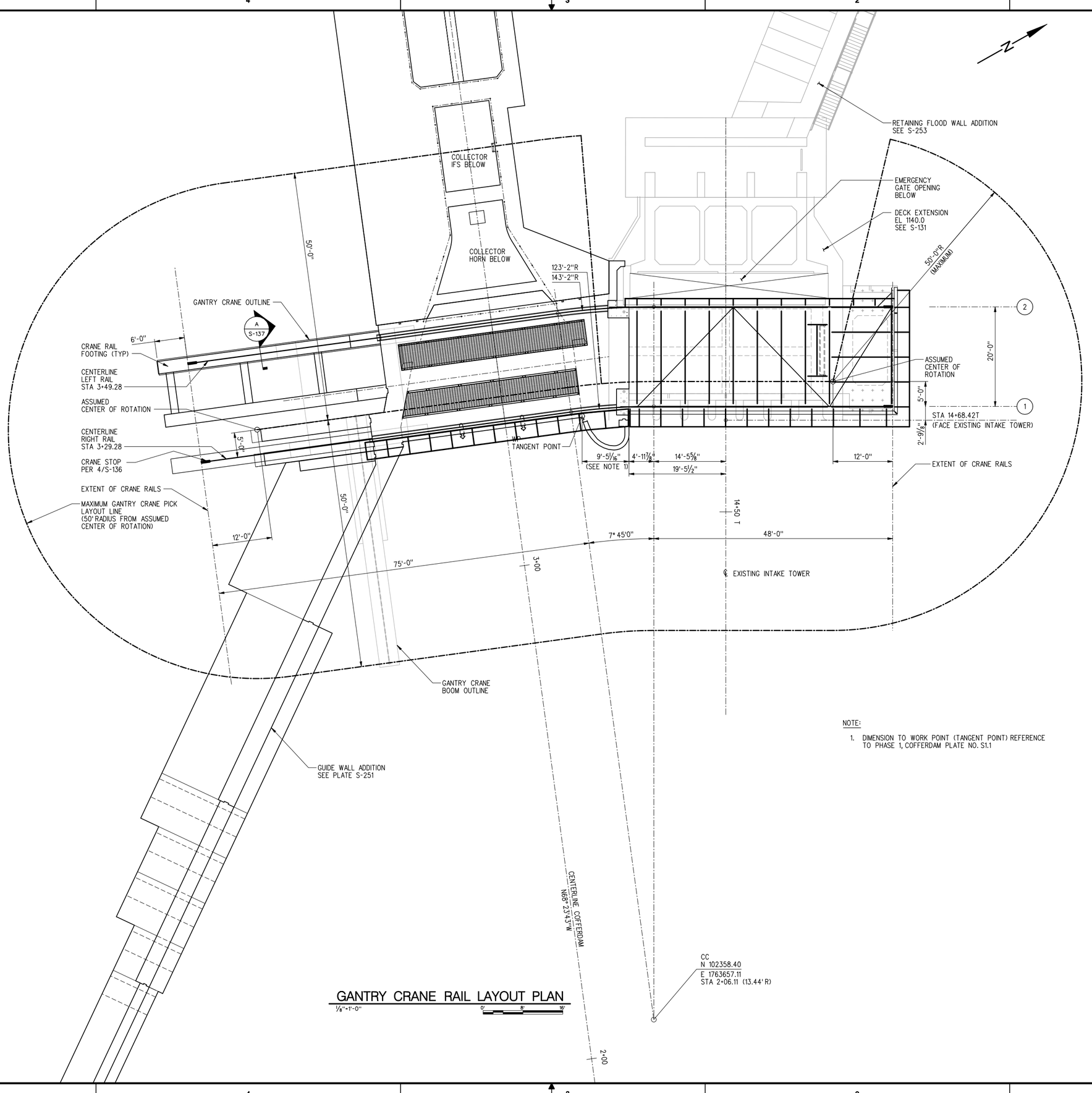

NOTE:

1. DIMENSION TO WORK POINT (TANGENT POINT) REFERENCE TO PHASE 1, COFFERDAM PLATE NO. S1.1

GANTRY CRANE RAIL LAYOUT PLAN

1/8"=1'-0"

US Army Corps of Engineers
Seattle District

Symbol	Description	Date	Appr.	Symbol	Description
		/ /			

U.S. ARMY ENGINEER DISTRICT, SEATTLE
CORPS OF ENGINEERS
SEATTLE, WASHINGTON

Prepared by:

Designed by: X
Drawn by: X
Checked by: X

Date: 16 MAR 06
File # E-56-14-19
Rev.

ADDITIONAL WATER STORAGE PROJECT
HOWARD HANSON DAM
GANTRY CRANE RAIL
LAYOUT PLAN
GREEN RIVER WASHINGTON

Plate number:
S-130
Sheet of

DATE AND TIME PLOTTED: 8/6/2008 12:02:24 PM DESIGN FILE: I:\AECDesigns\HHAW\Structural\HHAWS-1s-130.DGN

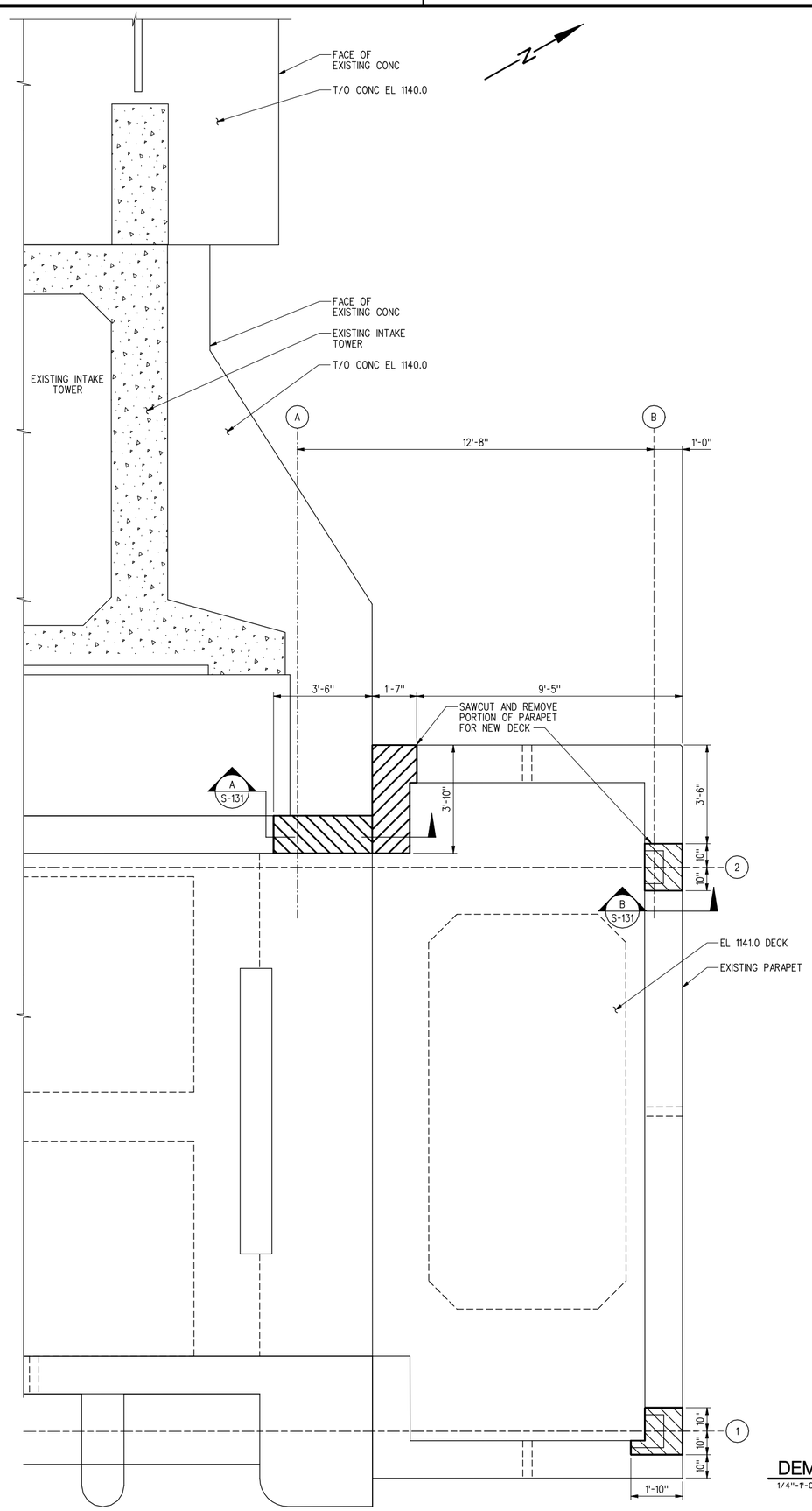

DEMOLITION PLAN

1/4"=1'-0"

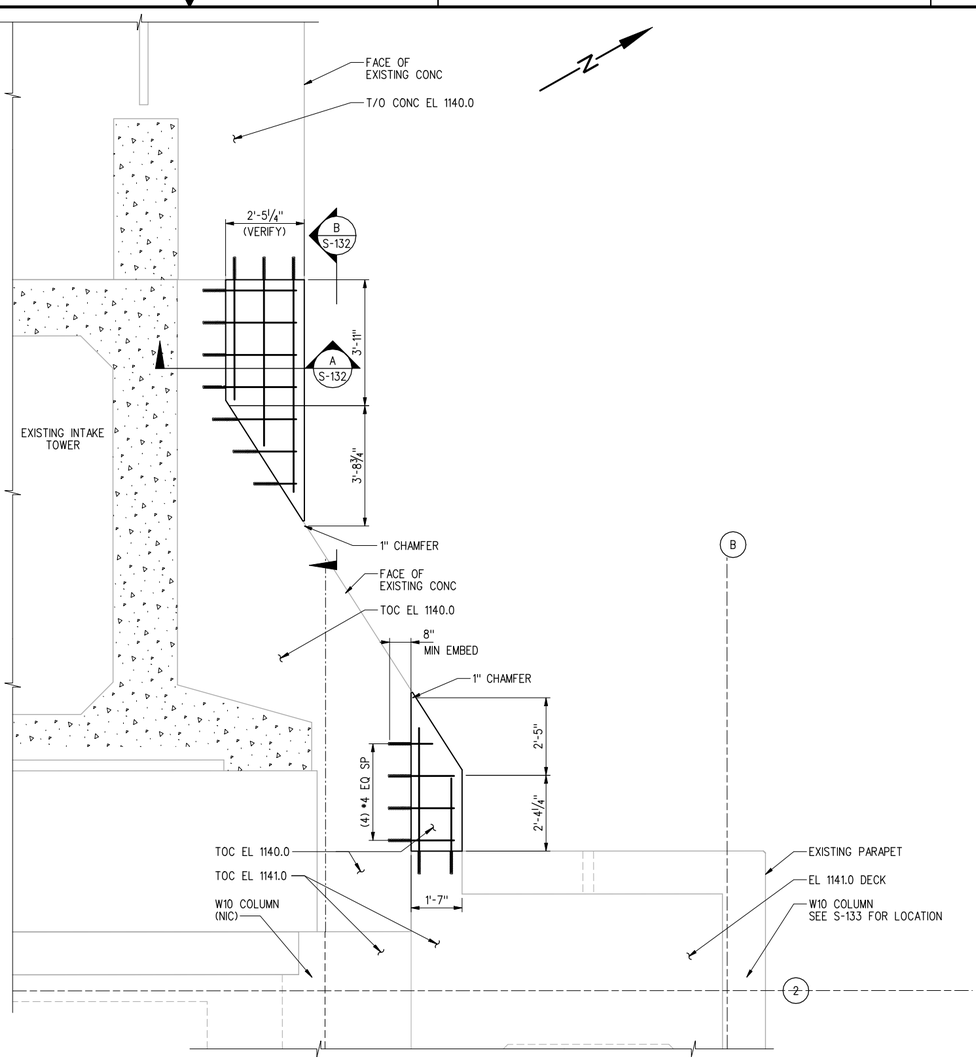

DECK EXTENSION REINFORCING PLAN

1/4"=1'-0"

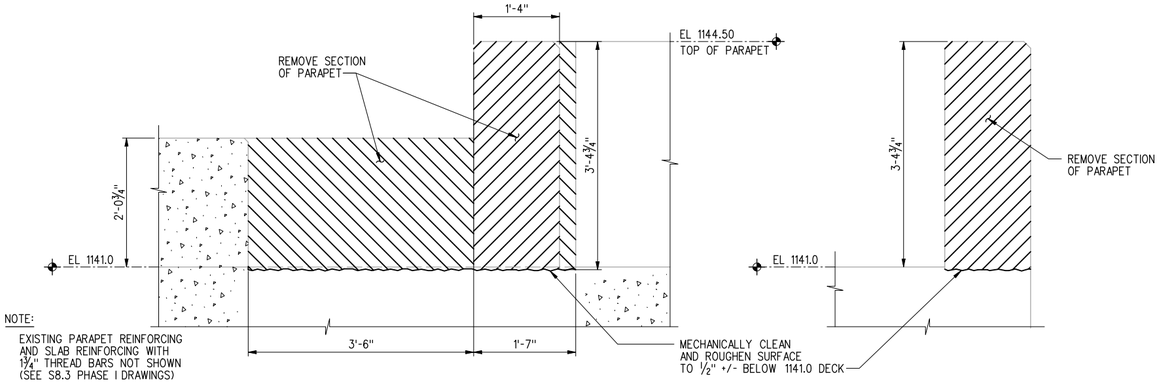

A SECTION

1"=1'-0"

B SECTION

1"=1'-0"

US Army Corps of Engineers
Seattle District

Symbol	Description
Appr.	
/ / Date	

Designed by: X	Date: 16 MAR 06
Drawn by: X	File # E-56-14-19
Checked by: X	Rev.

U.S.ARMY ENGINEER DISTRICT,SEATTLE
CORPS OF ENGINEERS
SEATTLE,WASHINGTON
Prepared by:

ADDITIONAL WATER STORAGE PROJECT
HOWARD HANSON DAM
1140 DECK EXTENSION PLANS & SECTION
GREEN RIVER WASHINGTON

Plate number:
S-131
Sheet of

DESIGN FILE: F:\AECDesigns\HHAW\Structural\HHAWS-1s-131.DGN
DATE AND TIME PLOTTED: 8/6/2008 12:02:27 PM

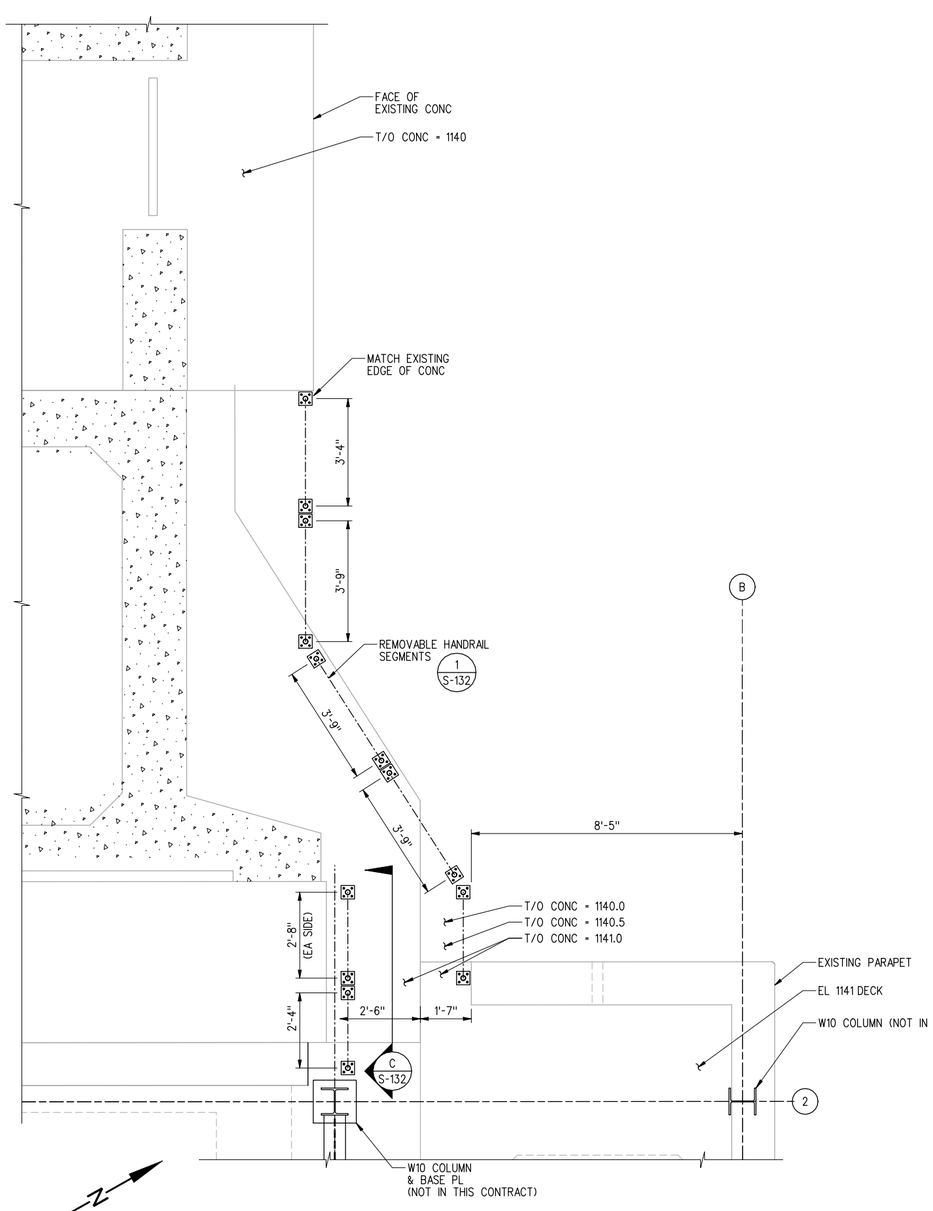

ACCESS PLAN @ EL 1140.0

1/4"=1'-0"

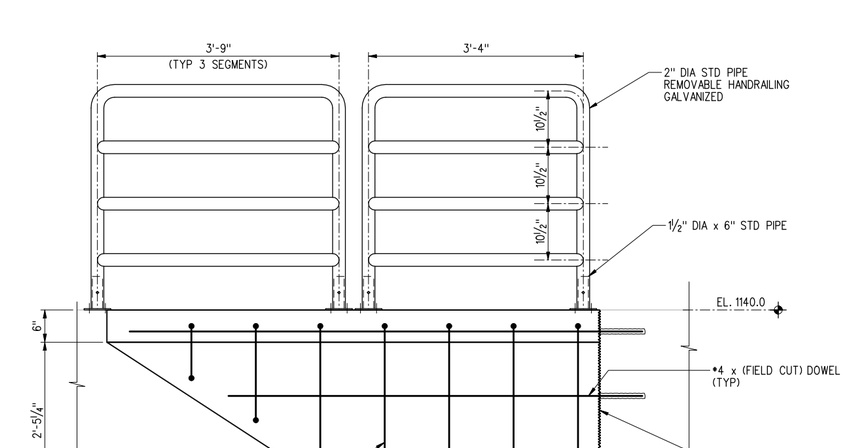

B SECTION

1"=1'-0"

NOTES:

1. PROVIDE ¾" CHAMFER ON ALL EXPOSED EDGES OF CONCRETE.
2. ALL HANDRAILING AND MISC. STRUCTURAL STEEL SHALL BE GALVANIZED.
3. PROVIDE 4" CLEAR COVER FOR REINFORCING.

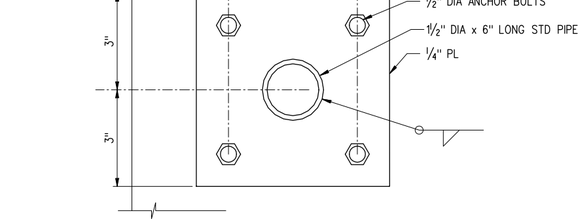

1 HANDRAIL BASE PLATE SUPPORT

3"=1'-0"

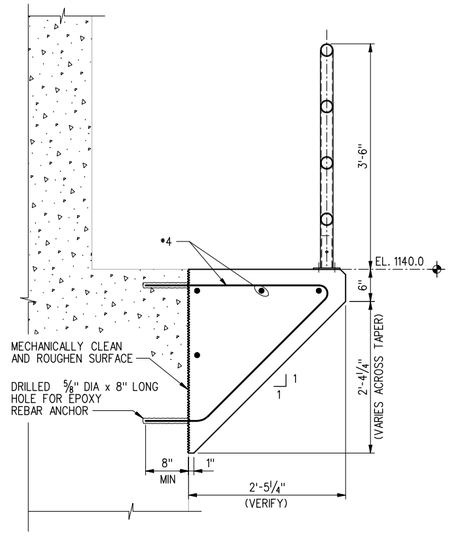

A SECTION

1"=1'-0"

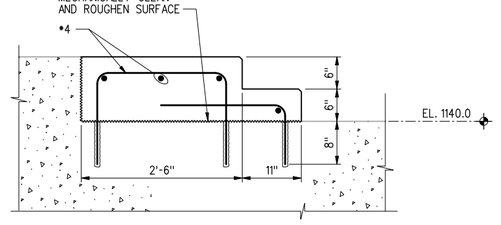

C SECTION

1"=1'-0"

US Army Corps of Engineers
Seattle District

Symbol	Description
Appr.	Symbol
Date	Description

Designed by: X
Drawn by: X
Checked by: X

Date: 16 MAR 06
File # E-56-14-19
Rev.

U.S.ARMY ENGINEER DISTRICT,SEATTLE
CORPS OF ENGINEERS
SEATTLE,WASHINGTON
Prepared by:

ADDITIONAL WATER STORAGE PROJECT
HOWARD HANSON DAM
GREEN RIVER WASHINGTON

DECK PLAN SECTIONS & DETAILS

Plate number: S-132
Sheet of

DESIGN FILE: F:\AECDesigns\HHAW\Structural\HHAWS_1s-132.DGN
DATE AND TIME PLOTTED: 8/6/2008 12:02:36 PM

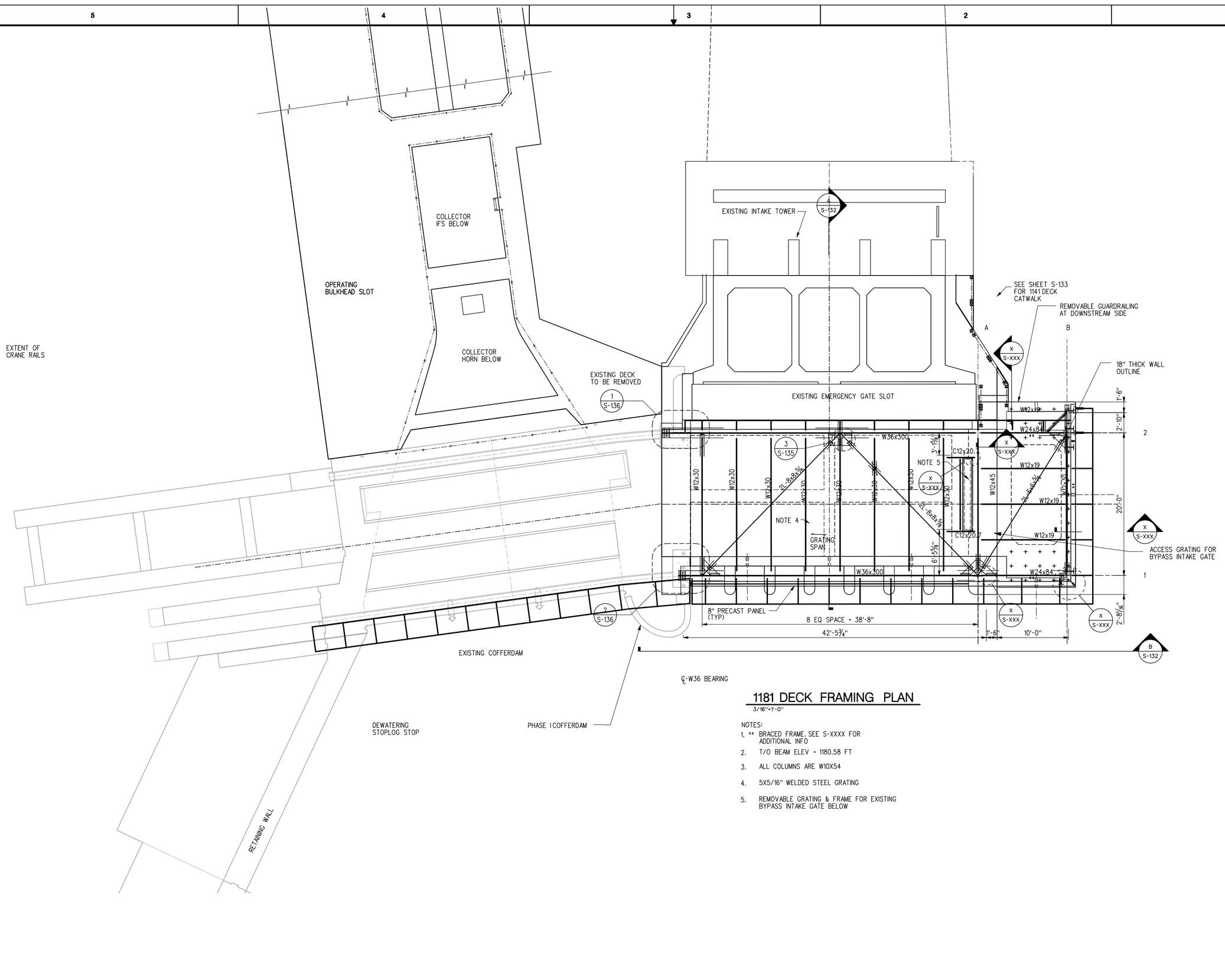

1181 DECK FRAMING PLAN

3/16"=1'-0"

NOTES:

1. ** BRACED FRAME. SEE S-XXXX FOR ADDITIONAL INFO
2. T/O BEAM ELEV = 1180.58 FT
3. ALL COLUMNS ARE W10X54
4. 5X5/16" WELDED STEEL GRATING
5. REMOVABLE GRATING & FRAME FOR EXISTING BYPASS INTAKE GATE BELOW

⅜" = 1'-0" 5' 0 5' 10'

US Army Corps of Engineers
Seattle District

Symbol	Description	Appr.	Date
			/ /

Date: 16 MAR 06
File #
E-56-14-19
Rev.

Designed by: X
Drawn by: X
Checked by: X

U.S.ARMY ENGINEER DISTRICT,SEATTLE
CORPS OF ENGINEERS
SEATTLE, WASHINGTON
Prepared by:

ADDITIONAL WATER STORAGE PROJECT
HOWARD HANSON DAM

GANTRY CRANE SUPPORT STRUCTURE PLAN

WASHINGTON
GREEN RIVER

Plate number:
S-131
Sheet of

FILE: I:\AEC\Designs\HHAW\Structural\HHAWS_1s-133.DGN
DESIGN FILE:
12:02:40 PM
DATE AND TIME PLOTTED: 8/6/2008

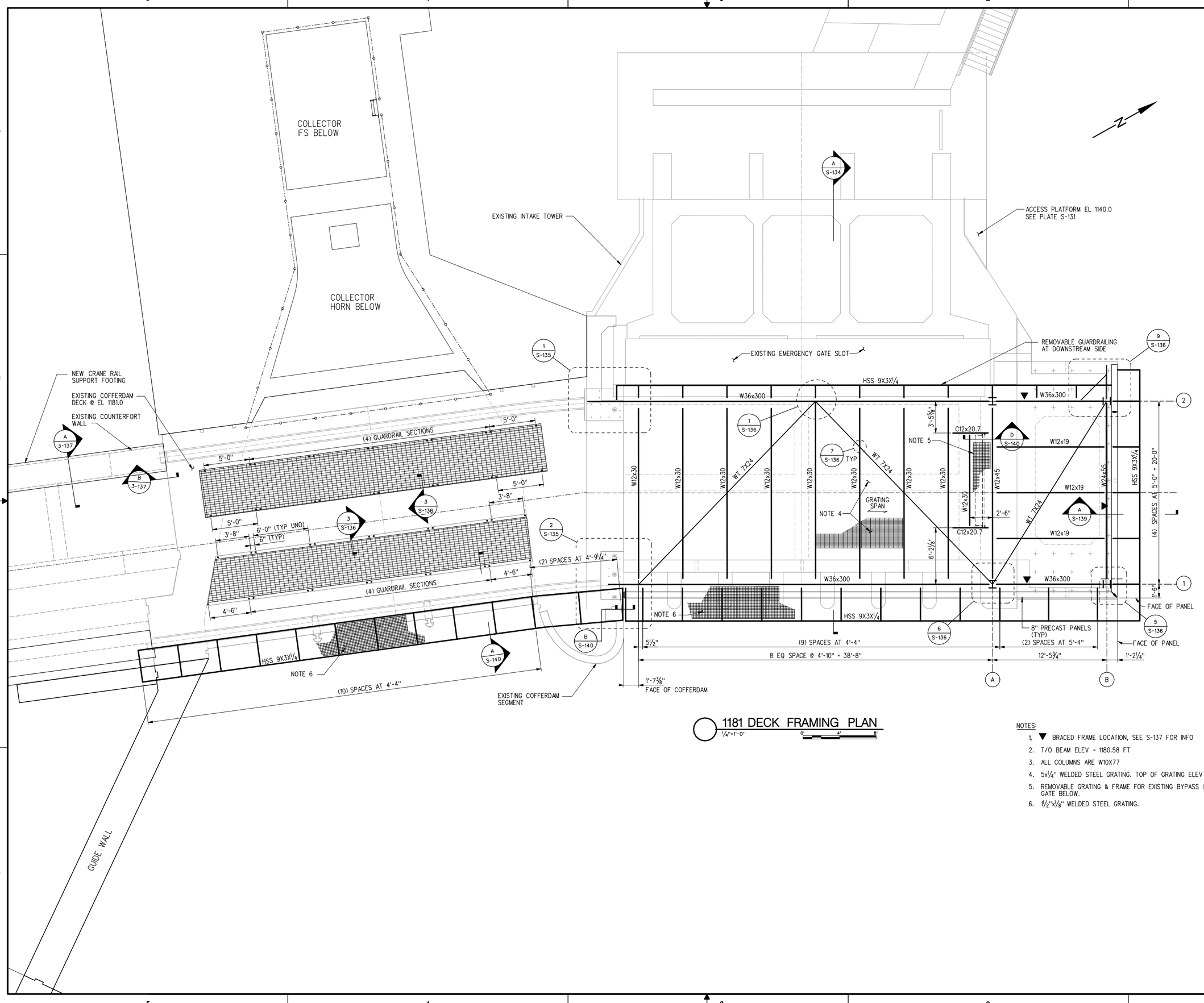

1181 DECK FRAMING PLAN

1/4"=1'-0"

NOTES:

1. ▼ BRACED FRAME LOCATION, SEE S-137 FOR INFO
2. T/O BEAM ELEV = 1180.58 FT
3. ALL COLUMNS ARE W10X77
4. 5x¼" WELDED STEEL GRATING. TOP OF GRATING ELEV = 1181.0
5. REMOVABLE GRATING & FRAME FOR EXISTING BYPASS INTAKE GATE BELOW.
6. ½"x⅛" WELDED STEEL GRATING.

US Army Corps of Engineers
Seattle District

Symbol	Description
Appr.	
Date	/ /

Designed by: X
Drawn by: X
Checked by: X

Date: 16 MAR 06
File #: E-56-14-19
Rev.:

U.S.ARMY ENGINEER DISTRICT,SEATTLE
CORPS OF ENGINEERS
SEATTLE, WASHINGTON

Prepared by:

ADDITIONAL WATER STORAGE PROJECT
HOWARD HANSON DAM

GANTRY CRANE SUPPORT STRUCTURE PLAN

GREEN RIVER WASHINGTON

Plate number:
S-133
Sheet of

DESIGN FILE: J:\AEC\Designs\HHAW\Structural\HHAWS-1s-133.DGN
DATE AND TIME PLOTTED: 8/6/2008 12:02:41 PM

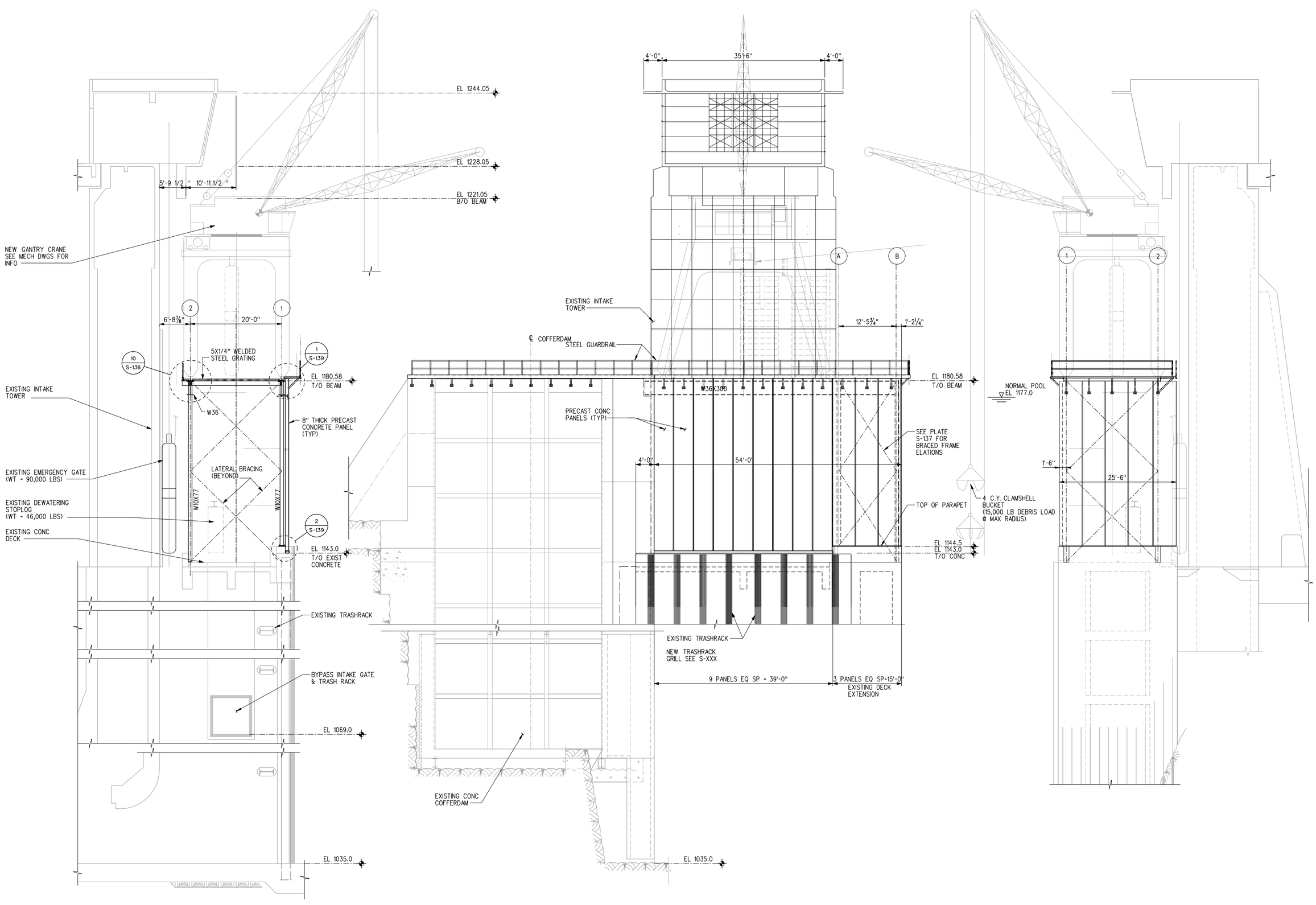

A SECTION AT EXISTING INTAKE TOWER
1/8"=1'-0"

B UPSTREAM ELEVATION OF 1181 DECK
1/8"=1'-0"

C ELEVATION – NORTH PANEL LAYOUT
1/8"=1'-0"

US Army Corps of Engineers
Seattle District

Symbol	Description	Appr.	Date
			/ /

Designed by:
Drawn by:
Checked by:
Prepared by:

U.S.ARMY ENGINEER DISTRICT SEATTLE
CORPS OF ENGINEERS
SEATTLE, WASHINGTON

Date: 16 MAR 06
File # E-56-14-19
Rev.

ADDITIONAL WATER STORAGE PROJECT
HOWARD HANSON DAM
GREEN RIVER

GANTRY CRANE SUPPORT STRUCTURE DETAILS

WASHINGTON

Plate number:
S-134
Sheet of

DATE AND TIME PLOTTED: 8/6/2008 12:02:50 PM
DESIGN FILE: P:\AECDesigns\HHAW\Structural\HHAWS-1s-134.DGN

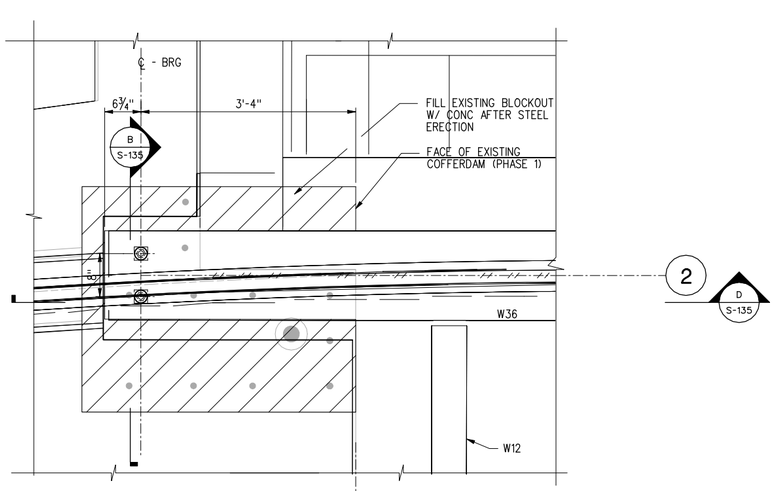

1 PLAN DETAIL OF GIRDER BEARING AT EXISTING COFFERDAM

1"=1'-0"

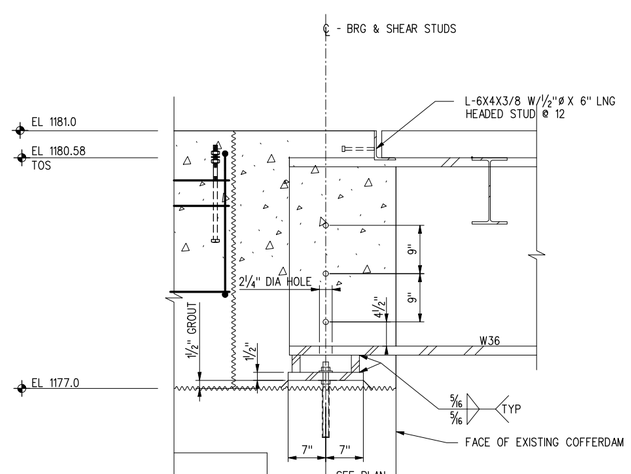

A SECTION

1"=1'-0"

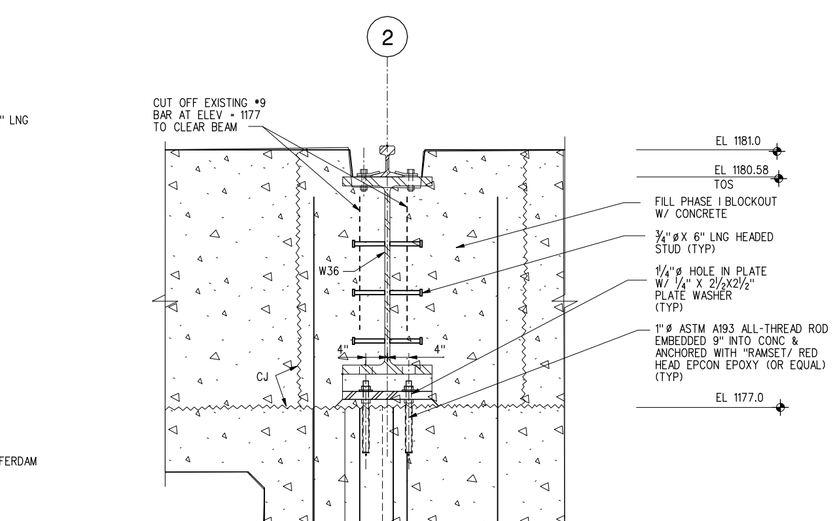

B SECTION AT WEST GIRDER

½"=1'-0"

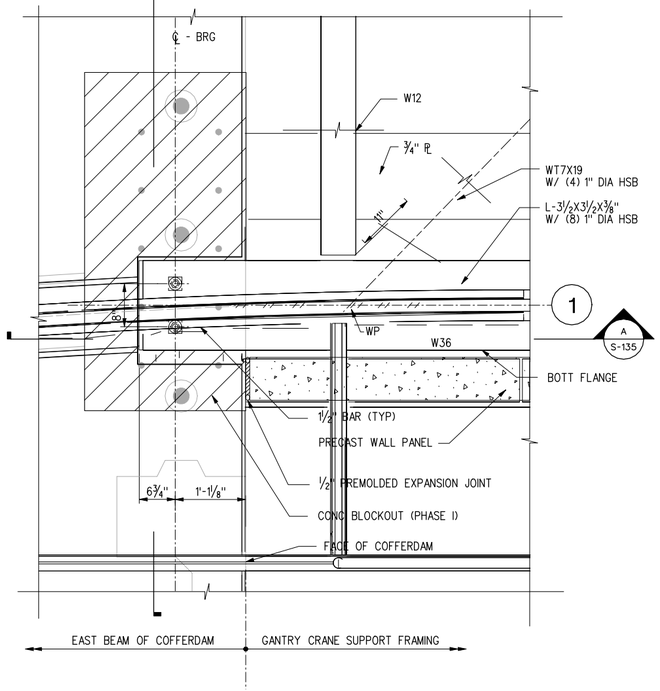

2 PLAN DETAIL OF GIRDER BEARING AT EXISTING COFFERDAM

1"=1'-0"

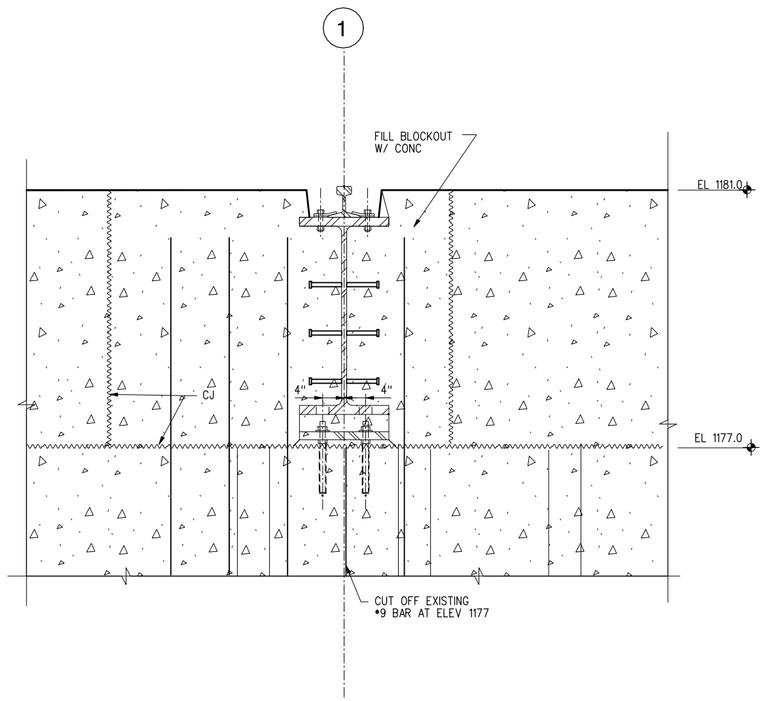

C SECTION AT EAST GIRDER

1"=1'-0"

NOTE: SEE SECTION "B" FOR ADDITIONAL INFO

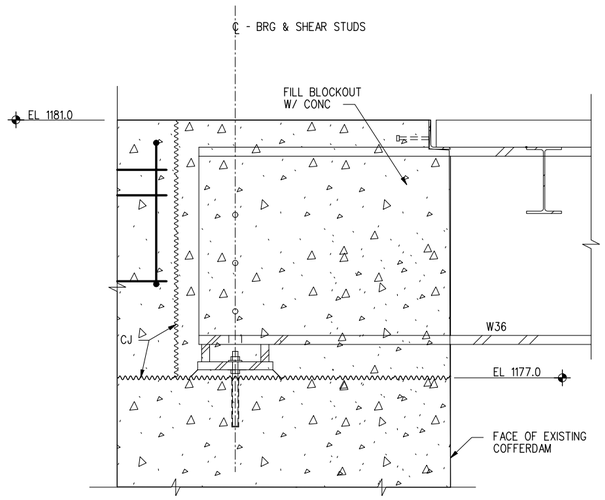

D SECTION

1"=1'-0"

NOTE: SEE SECTION "A" FOR ADDITIONAL INFO

US Army Corps of Engineers
Seattle District

Symbol	Description
Appr.	
Date	

Designed by: X
Drawn by: X
Checked by: X
Date: 16 MAR 06
File #: E-56-14-19
Rev.

U.S.ARMY ENGINEER DISTRICT,SEATTLE
CORPS OF ENGINEERS
SEATTLE, WASHINGTON
Prepared by:

ADDITIONAL WATER STORAGE PROJECT
HOWARD HANSON DAM
GREEN RIVER WASHINGTON

GANTRY CRANE FRAMING DETAILS III

Plate number:
S-135
Sheet of

I:\AECDesigns\HHAWS\Structural\HHAWS_1s-135.DGN
DESIGN FILE:
12:03:01 PM
DATE AND TIME PLOTTED: 8/6/2008

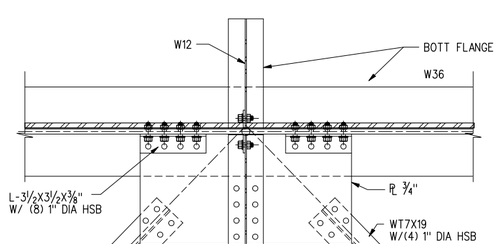

1 DETAIL
½"=1'-0"

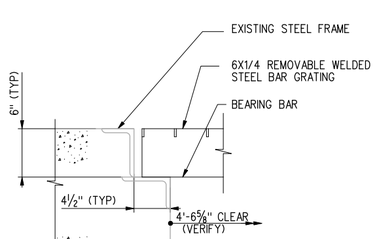

3 DETAIL
½"=1'-0"

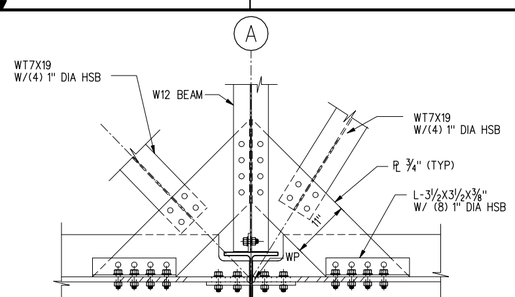

6 DETAIL
½"=1'-0"

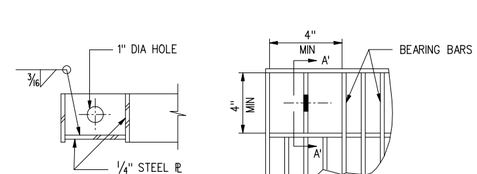

SECTION A' - A'

GRATING PLAN

8 REMOVABLE GRATING LIFTING LUG DETAIL
NONE

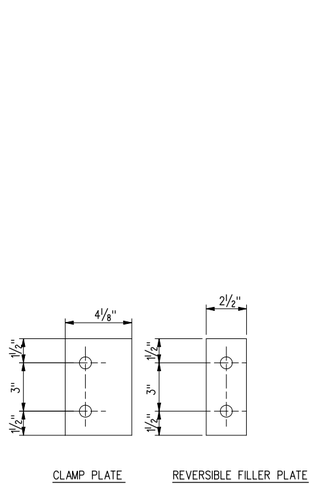

CLAMP PLATE REVERSIBLE FILLER PLATE

NOTE: 1. MAXIMUM CLAMP SPACING = 3'-0"
2. ALTERNATE MANUFACTURERED RAIL CLAMPS MAY BE SUBMITTED FOR APPROVAL.

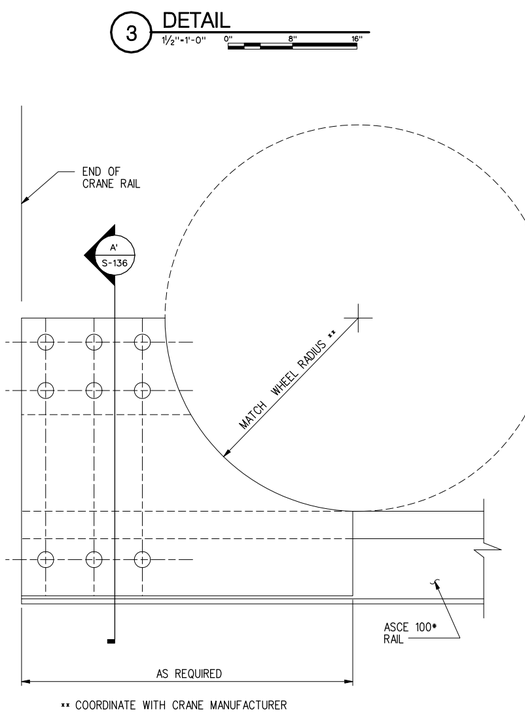

** COORDINATE WITH CRANE MANUFACTURER

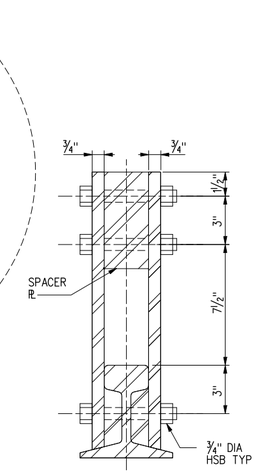

SECTION A' – A'

4 CRANE STOP DETAIL
3" = 1'-0"

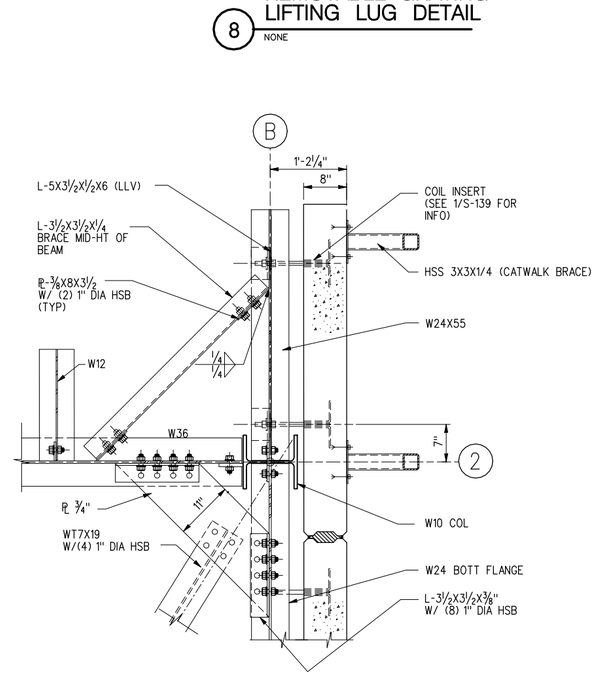

9 DETAIL
11/2"=1'-0"

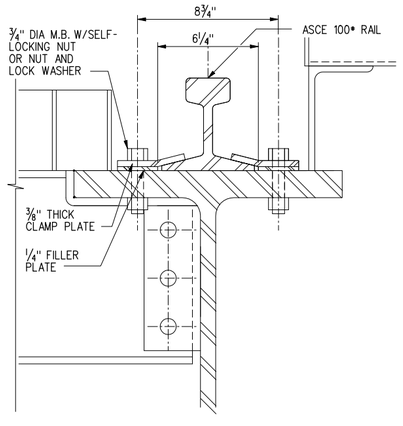

2 DETAIL
3"=1'-0"

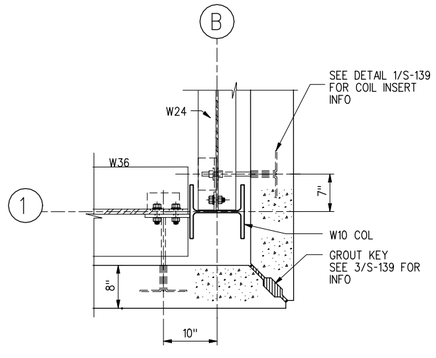

5 DETAIL
3"=1'-0"

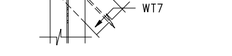

7 DETAIL
11/2"=1'-0"

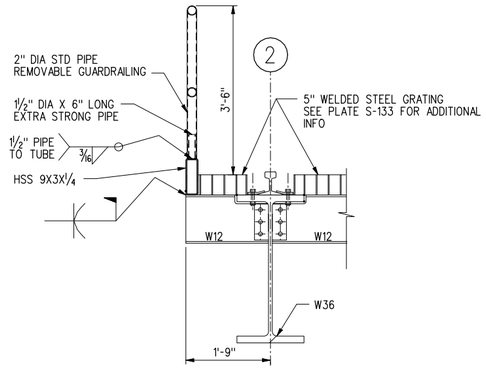

NOTE: SEE 1/S-139 FOR ADDITIONAL INFO

10 DETAIL
¾"=1'-0"

US Army Corps of Engineers
Seattle District

Symbol	Description
Appr.	
Date	/ /

Designed by: X NINNIS
Drawn by:
Checked by: X NINNIS
Prepared by:
Date: 16 MAR 06
File #
Rev. E-56-14-19

U.S. ARMY ENGINEER DISTRICT, SEATTLE
CORPS OF ENGINEERS
SEATTLE, WASHINGTON

ADDITIONAL WATER STORAGE PROJECT
HOWARD HANSON DAM
GREEN RIVER WASHINGTON

GANTRY CRANE FRAMING DETAILS II

Plate number: S-136
Sheet of

I:\ACCDesigns\HHAWS\Structural\HHAWS-1s-136.DGN
DESIGN FILE:
12:03:10 PM
DATE AND TIME PLOTTED: 8/6/2008

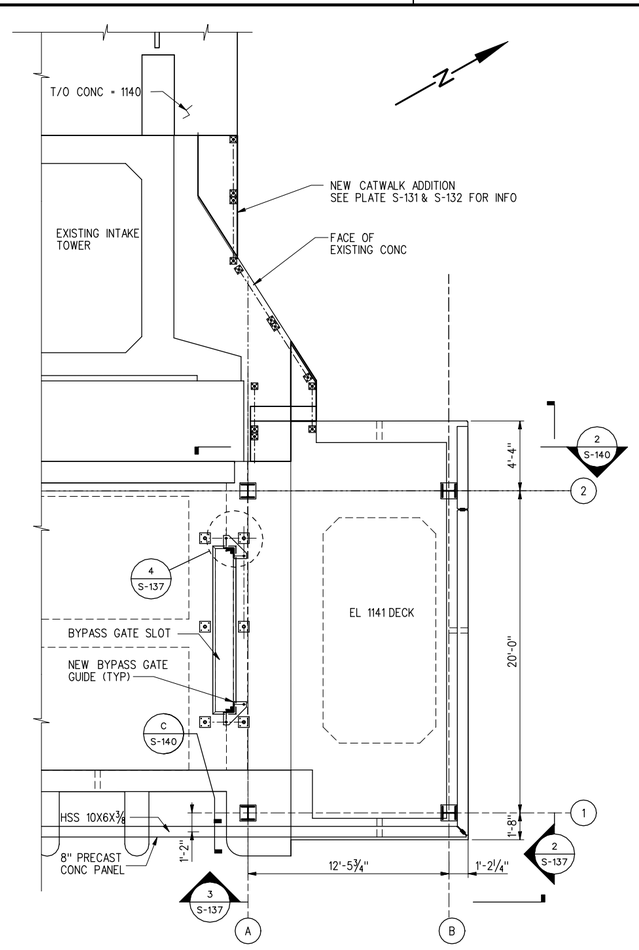

PARTIAL PLAN OF EXISTING 1141 DECK

1/4"=1'-0"

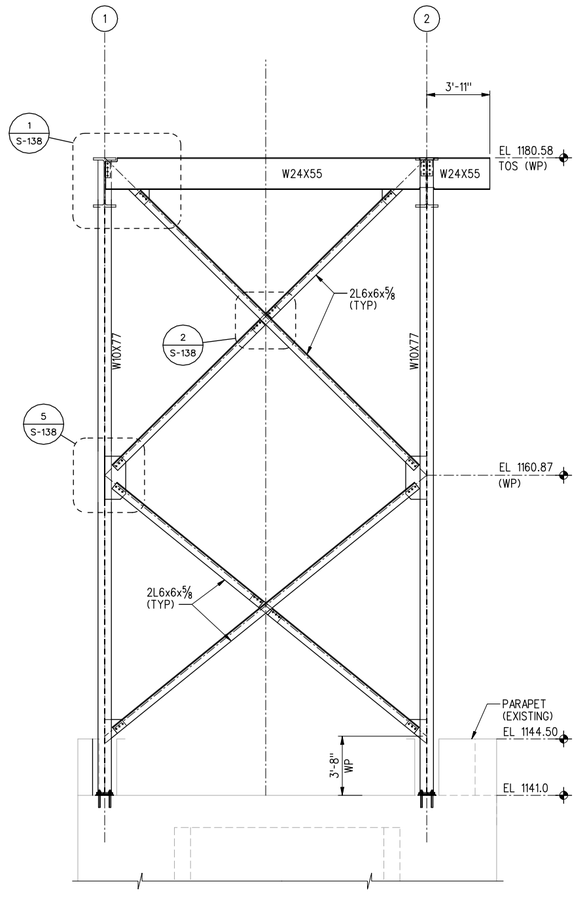

FRAMING ELEVATION COL (B)

1/4"=1'-0"

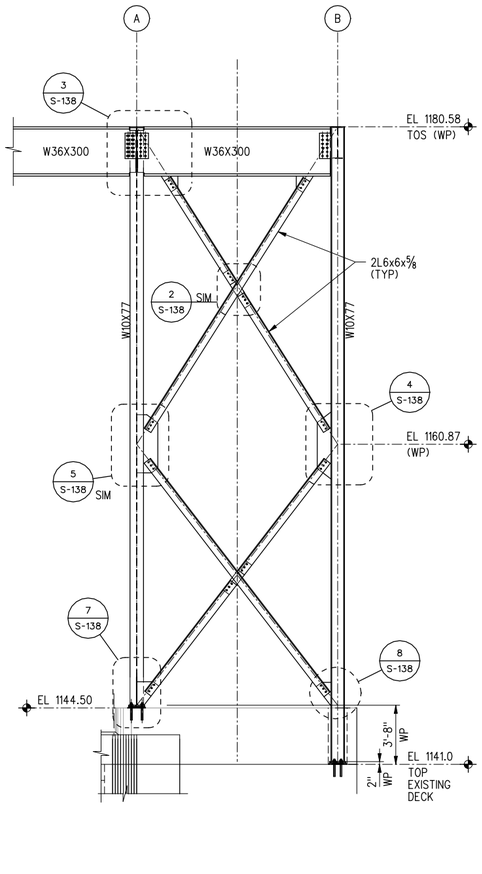

FRAMING ELEVATION COL (1)

1/4"=1'-0"

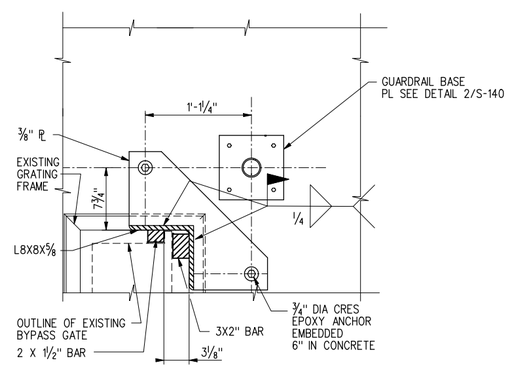

GATE GUIDE DETAIL

1 1/2"=1'-0"

NOTE: ALIGN NEW GUIDES WITH EXISTING GUIDES

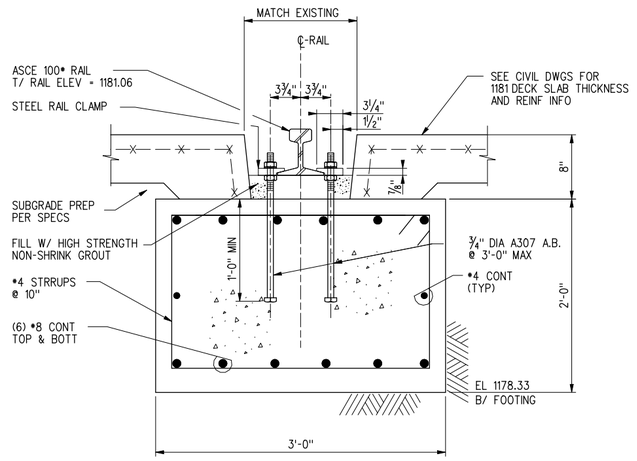

CRANE RAIL SUPPORT FOOTING

1 1/2"=1'-0"

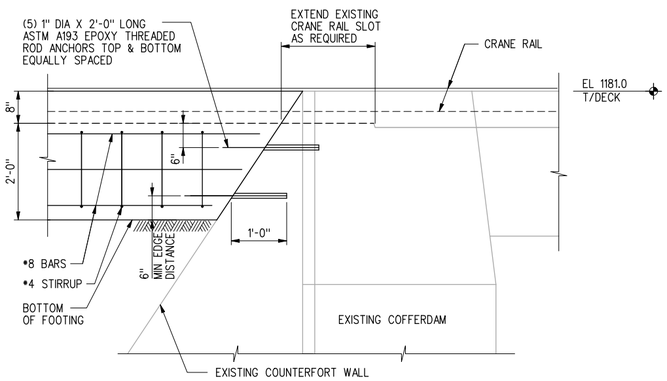

CRANE RAIL FOOTING TO COFFERDAM ANCHORAGE

3/4"=1'-0"

US Army Corps of Engineers
Seattle District

Symbol	Date	Appr.	Description
	/ /		

Date: 16 MAR 06
File #
Rev. E-56-14-19

Designed by: X
Drawn by: X
Checked by: X

U.S.ARMY ENGINEER DISTRICT,SEATTLE
CORPS OF ENGINEERS
SEATTLE, WASHINGTON
Prepared by:

ADDITIONAL WATER STORAGE PROJECT
HOWARD HANSON DAM
GREEN RIVER WASHINGTON

GANTRY CRANE FRAMING DETAILS II

Plate number:
S-137
Sheet of

I:\AEC\Designs\HHAW\Structural\HHAWS-1s-137.DGN
DESIGN FILE:
12:03:14 PM
DATE AND TIME PLOTTED: 8/6/2008

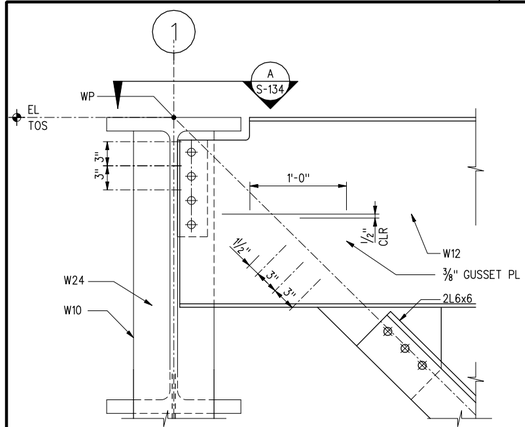

1 DETAIL 1½"=1'-0"

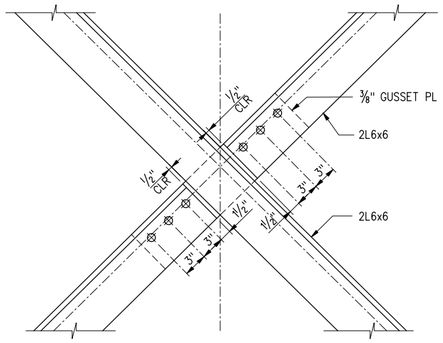

4 DETAIL 1½"=1'-0"

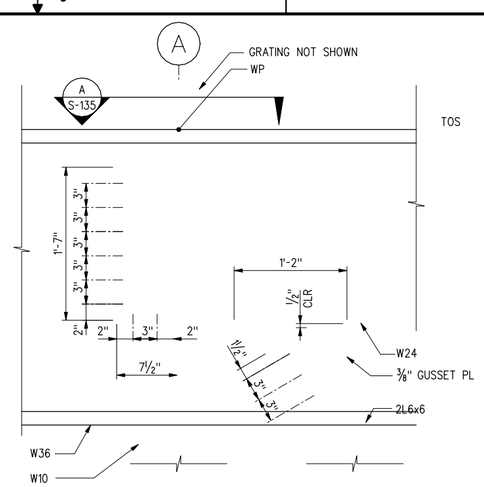

5 DETAIL 1½"=1'-0"

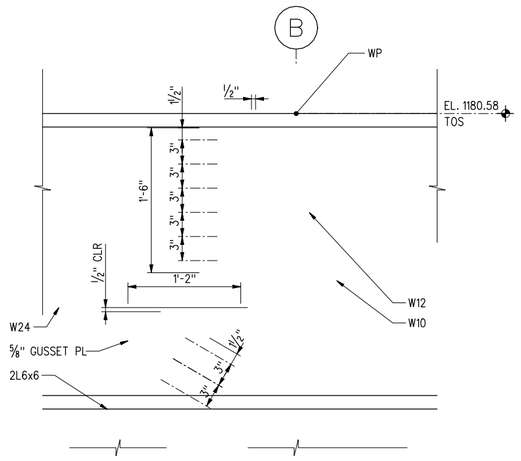

8 DETAIL 1½"=1'-0"

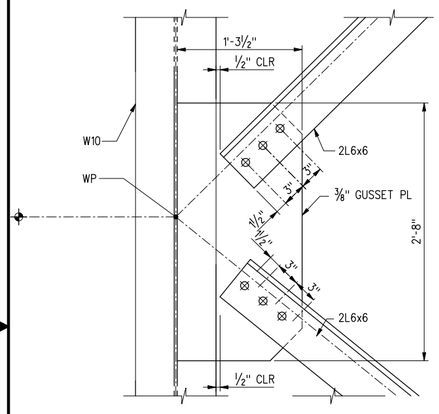

2 DETAIL 1½"=1'-0"

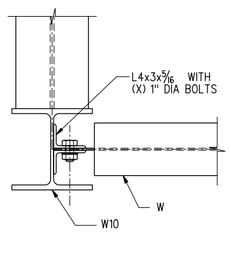

A SECTION 1½"=1'-0"

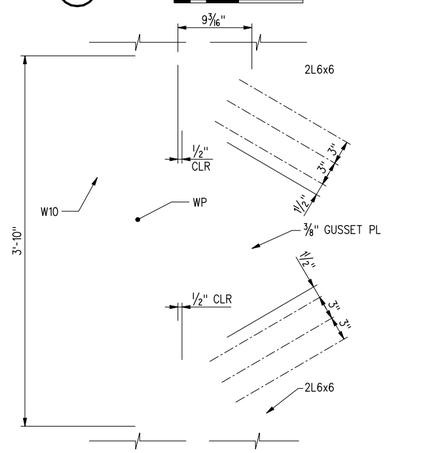

6 DETAIL 1½"=1'-0"

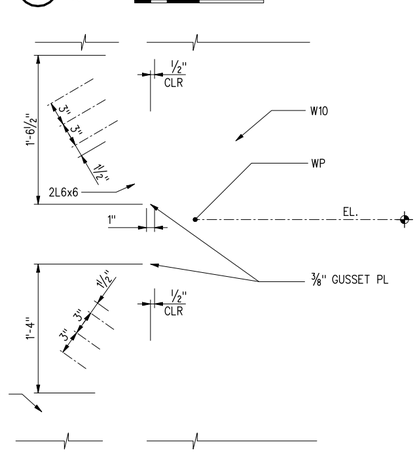

9 DETAIL 1½"=1'-0"

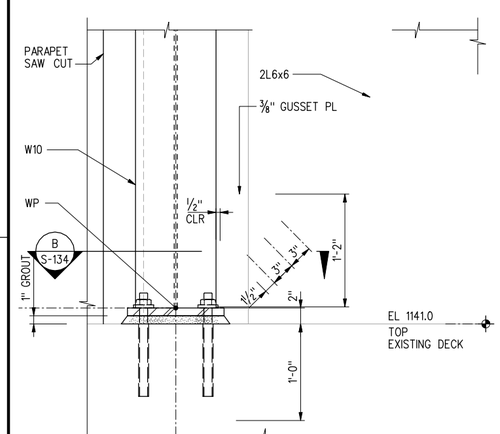

3 DETAIL 1½"=1'-0"

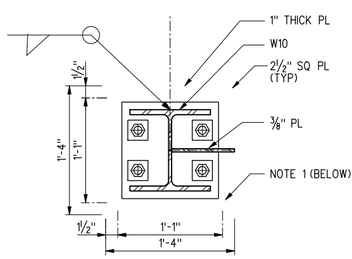

B SECTION 11/2"=1'-0"

1. 1"ø "RAMSET/RED HEAD" (OR EQUAL) EPCON EPOXY THREADED ROD ANCHOR INSTALLED PER MANUF RECOMMENDATION (TYP)

EL. 1144.50
TOP
PARAPET

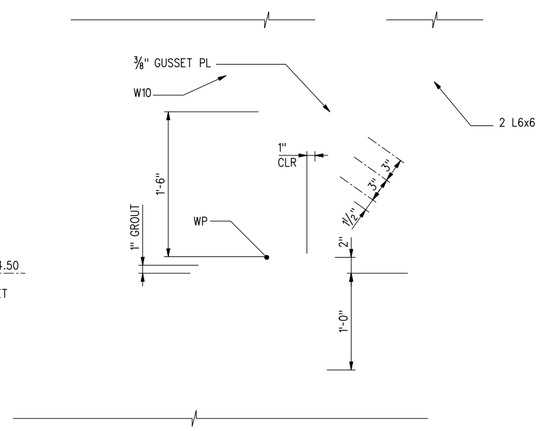

7 DETAIL 1½"=1'-0"

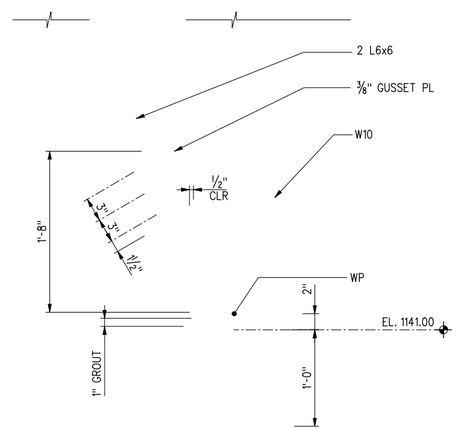

10 DETAIL 1½"=1'-0"

REVIEWER: FUTURE SUBMITTAL
TO INCLUDE WELD INFO

NOTE: ALL BOLTS 1" A325 (N)

US Army Corps of Engineers
Seattle District

Symbol	Date	Description
	/ /	

Date: 16 MAR 06
File #: E-56-14-19
Rev.:

Designed by: X
Drawn by: X
Checked by: X

U.S. ARMY ENGINEER DISTRICT, SEATTLE
CORPS OF ENGINEERS
SEATTLE, WASHINGTON
Prepared by:

ADDITIONAL WATER STORAGE PROJECT
HOWARD HANSON DAM
GRANTRY CRANE
FRAMING DETAILS I
GREEN RIVER WASHINGTON

Plate number:
S-134
Sheet of

I:\AEC\Designs\HHAW\Structural\HHAWS-1s-138.DGN
DESIGN FILE:
12:03:25 PM
DATE AND TIME PLOTTED: 8/6/2008

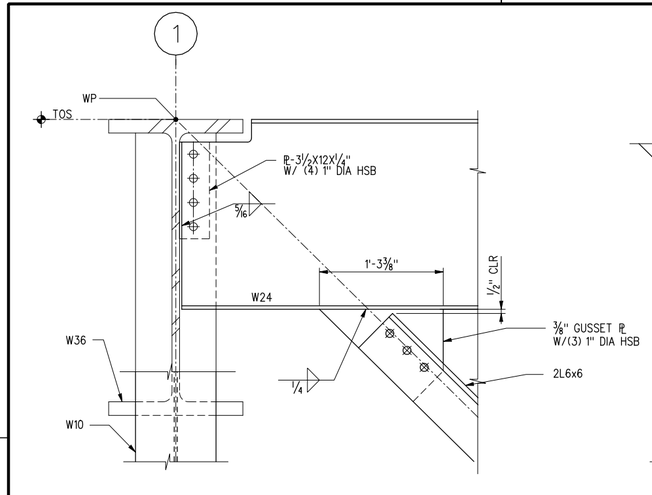

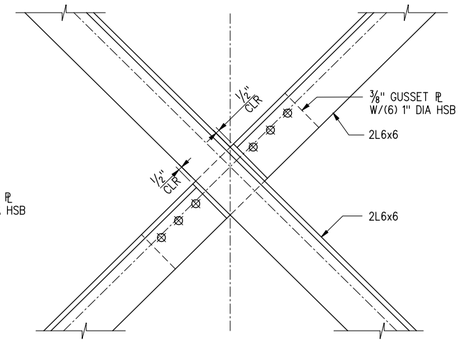

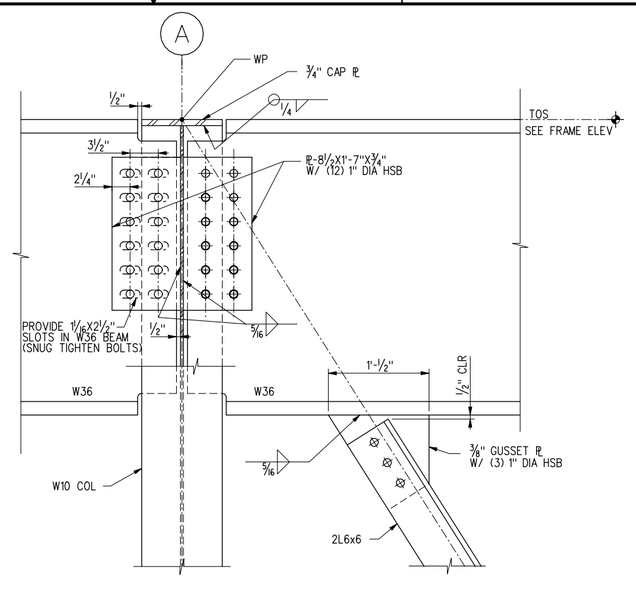

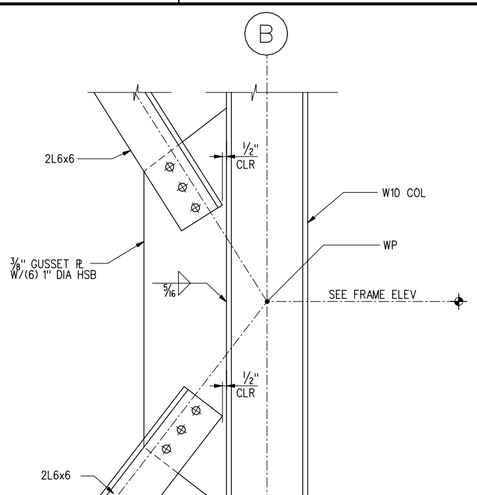

1 DETAIL
½"=1'-0"

2 DETAIL
½"=1'-0"

3 DETAIL
½"=1'-0"

4 DETAIL
½"=1'-0"

NOTE: SEE PLAN FOR COLUMN ORIENTATION

5 DETAIL
½"=1'-0"

TYPICAL COLUMN BASE PLATE FOR GANTRY CRANE PLATFORM

6 ½"=1'-0"

7 DETAIL
½"=1'-0"

8 DETAIL
½"=1'-0"

US Army Corps of Engineers
Seattle District

Symbol	Description
Appr.	Symbol
/ / Date	Description

U.S.ARMY ENGINEER DISTRICT,SEATTLE
CORPS OF ENGINEERS
SEATTLE, WASHINGTON
Prepared by:

Designed by: X
Drawn by: X
Checked by: X

Date: 16 MAR 06
File #: E-56-14-19
Rev.

ADDITIONAL WATER STORAGE PROJECT
HOWARD HANSON DAM
GREEN RIVER WASHINGTON

GRANTRY CRANE FRAMING DETAILS III

Plate number:
S-138
Sheet of

DATE AND TIME PLOTTED: 8/6/2008 12:03:26 PM
DESIGN FILE: P:\AECDesigns\HHAW\Structural\HHAWS-1s-138.DGN

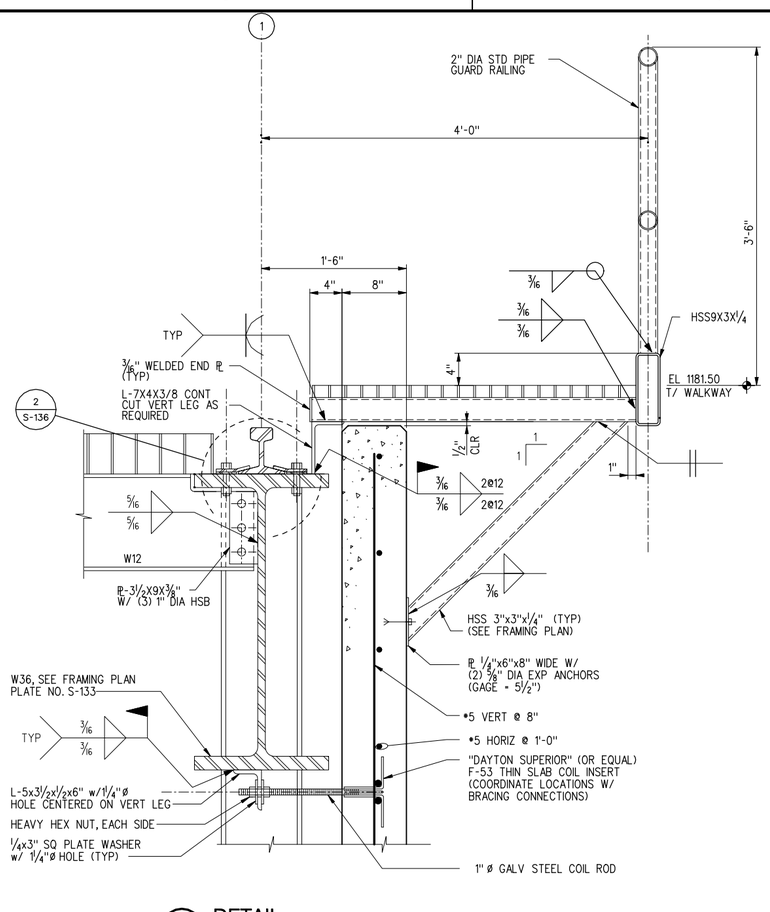

1 DETAIL
1 1/2"=1'-0" 0" 8" 16"

NOTE: SEE DETAIL 4, THIS SHEET FOR ADDITIONAL INFO

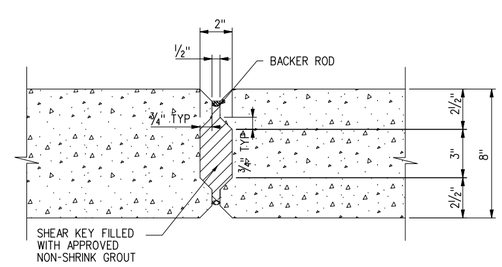

3 PRECAST WALL PANEL JOINT DETAIL
3"=1'-0" 0" 4" 8"

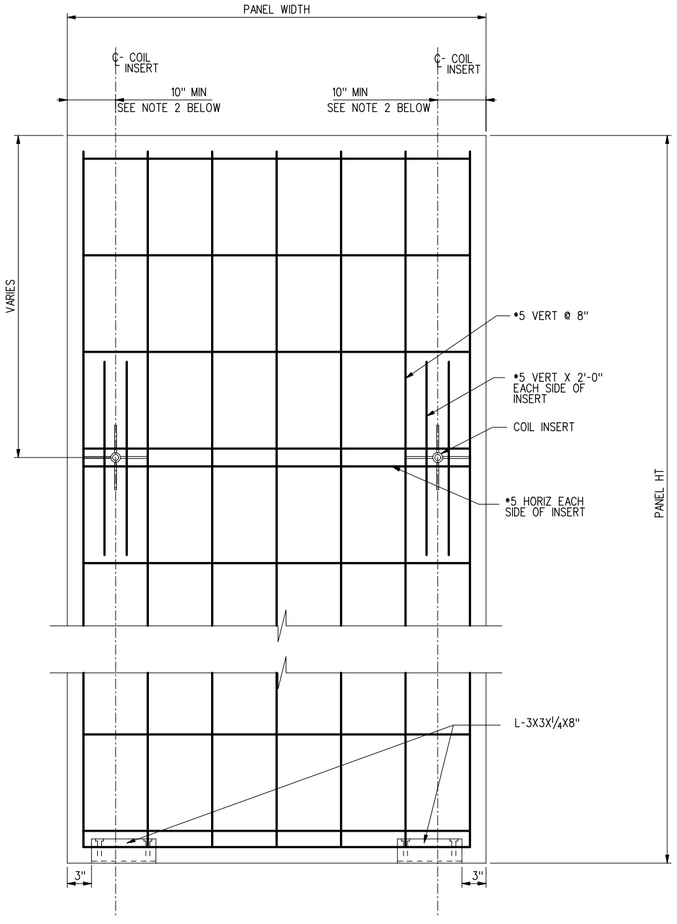

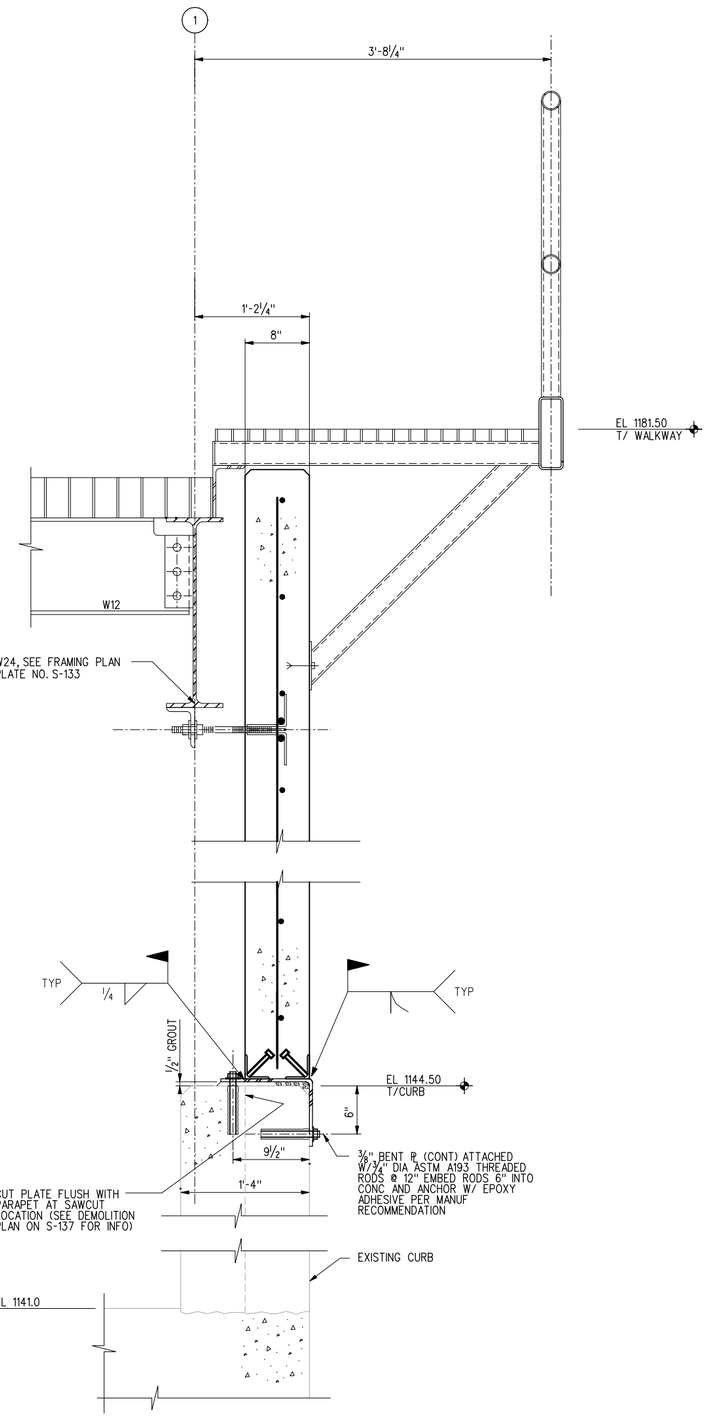

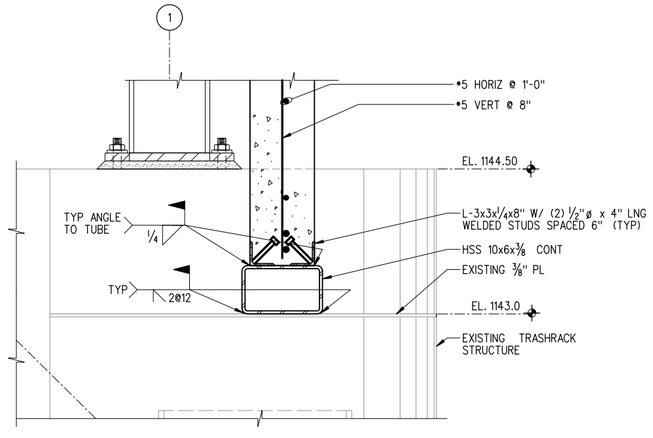

2 DETAIL
1 1/2"=1'-0" 0" 8" 16"

4 TYPICAL PRECAST PANEL REINFORCEMENT
SCALE: NONE

NOTE: 1. ERECTION INSERTS PROVIDED BY PRECAST MANUF
2. COORDINATE LOCATION OF COIL INSERTS WITH BRACING CONNECTIONS. SEE PLATE S-137 AND S-140 FOR ADDITIONAL INFO.

A SECTION
1 1/2"=1'-0" 0" 8" 16"

NOTE: SEE DETAIL 1 & 2, THIS SHEET FOR INFORMATION NOT SHOWN

US Army Corps of Engineers
Seattle District

Symbol	Date	Appr.	Description
	/ /		

U.S. ARMY ENGINEER DISTRICT, SEATTLE
CORPS OF ENGINEERS
SEATTLE, WASHINGTON
Prepared by:

Designed by: X
Drawn by: X
Checked by: X

Date: 16 MAR 06
File *
Rev. E-56-14-19

ADDITIONAL WATER STORAGE PROJECT
HOWARD HANSON DAM
GREEN RIVER WASHINGTON

PRECAST PANEL DETAILS

Plate number:
S-139
Sheet of

DESIGN FILE: F:\AECDesigns\HHAW\Structural\HHAWS-1s-139.DGN
DATE AND TIME PLOTTED: 8/6/2008 12:03:34 PM

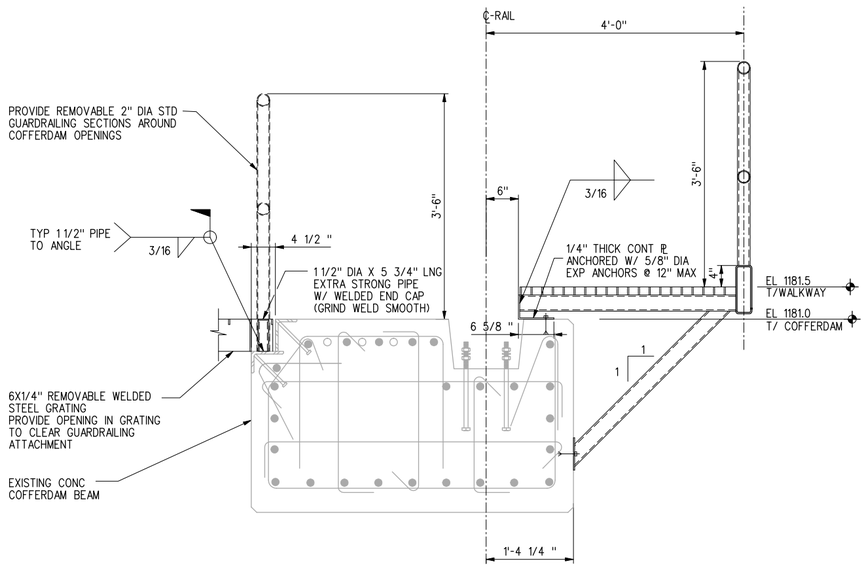

A SECTION
3/4"=1'-0"

NOTE: 1. CRANE RAIL NOT SHOWN
2. SEE 1/S-139 FOR ADDITIONAL INFO

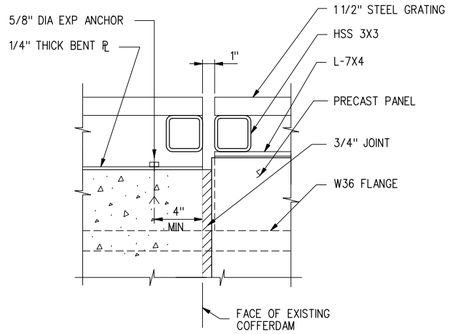

B SECTION
3/4"=1'-0"

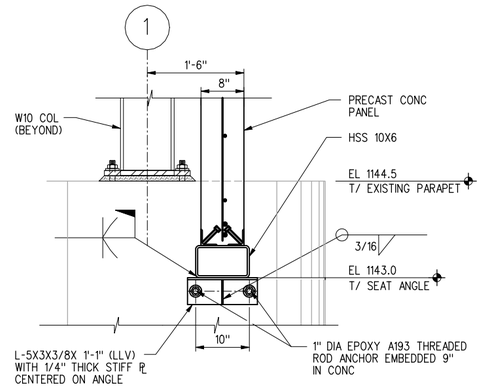

C HSS 10X6 END CONNECTION
3/4"=1'-0"

NOTE: SEE DETAIL 2/S-139 FOR ADDITIONAL INFO

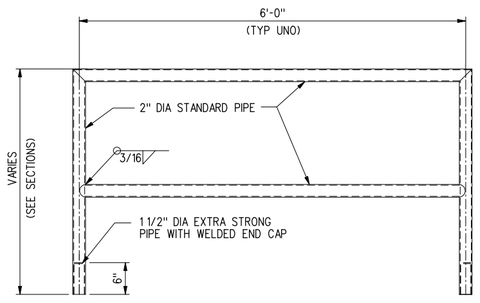

1 REMOVABLE GUARDRAIL DETAIL
3/4"=1'-0"

NOTE: SEE PLAN FOR LAYOUT

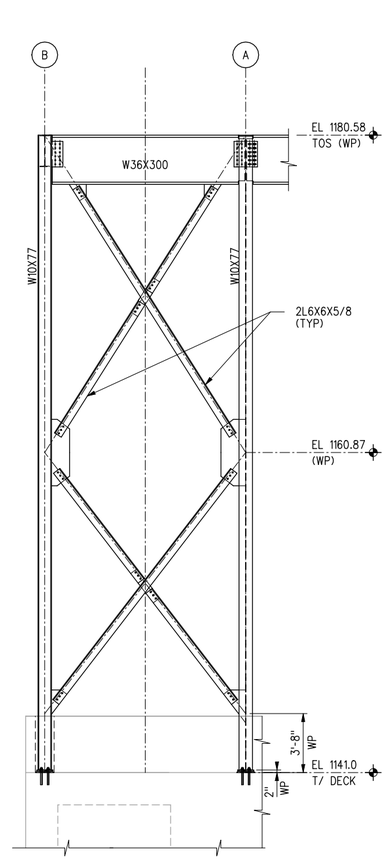

2 FRAMING ELEVATION COL (2)
1/4"=1'-0"

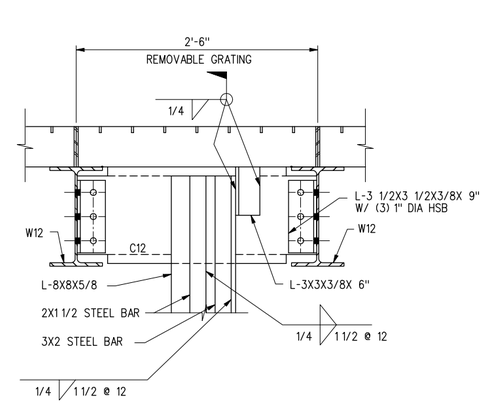

D SECTION
1 1/2"=1'-0"

NOTE: SEE DETAIL 4/S-137 FOR ADDITIONAL INFO

US Army Corps of Engineers
Seattle District

Symbol	Description	Symbol	Description

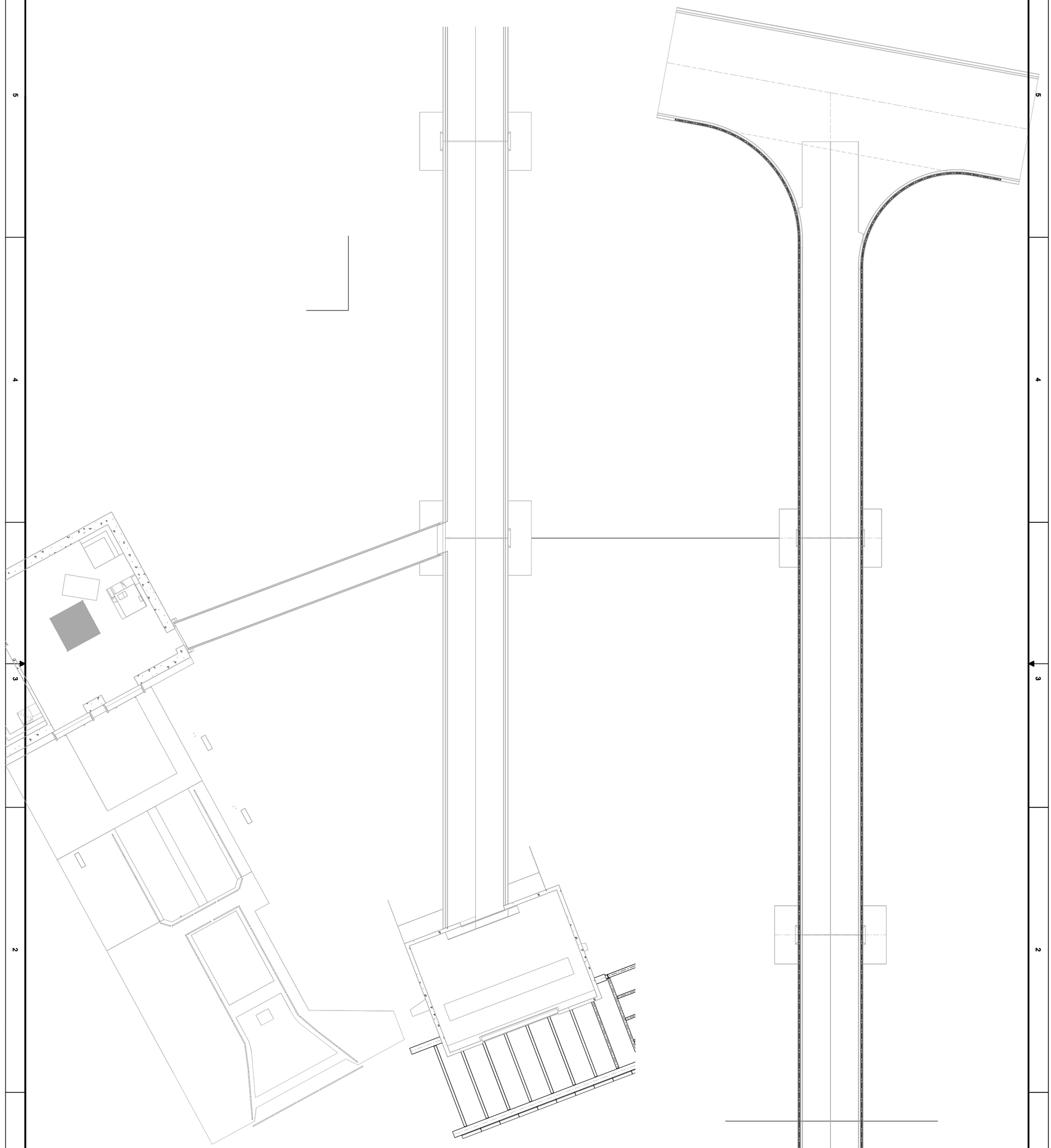

ADDITIONAL WATER STORAGE PROJECT
HOWARD HANSON DAM

PEDESTRIAN BRIDGE HANDRAIL LAYOUT

GREEN RIVER WASHINGTON

Plate number: S-141 Sheet of

U.S.ARMY ENGINEER DISTRICT,SEATTLE
CORPS OF ENGINEERS
SEATTLE, WASHINGTON
Prepared by:

Designed by: X	Date: 16 MAR 06
Drawn by: X	File • E-56-14-19
Checked by: X	Rev.

Symbol	Description	Date	Appr.	Symbol	Description
		/ /			

US Army Corps of Engineers
Seattle District

DATE AND TIME PLOTTED: 8/6/2008 12:03:47 PM DESIGN FILE: I:\AECDesigns\HHAW\Structural\HHAWS-1s-141.DGN

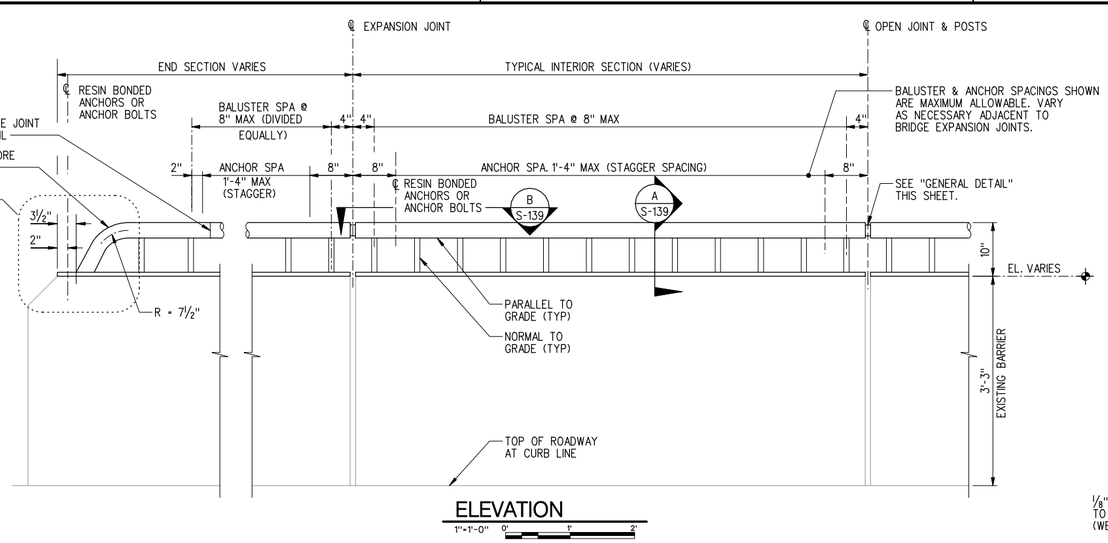

ELEVATION

1"=1'-0" 0" 1" 2"

BALUSTER AND THRIE-BEAM GUARDRAIL ATTACHMENT DETAILS NOT SHOWN.

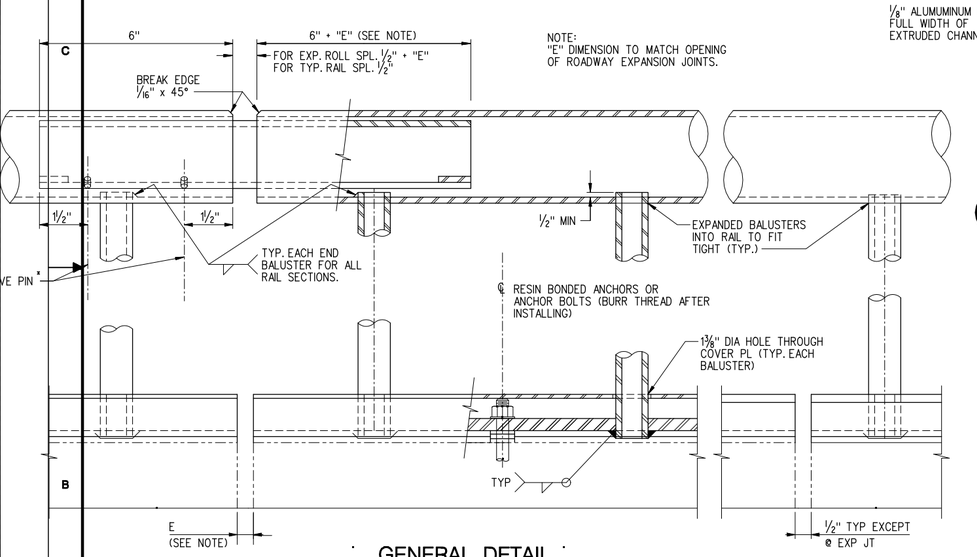

GENERAL DETAIL

6"-1'-0" 0" 2" 4"

B SECTION

3"-1'-0" 0" 4" 8"

MAT'L	PART	MATERIAL SPECIFICATION
ALUMINUM	PIPES	ASTM B221- 6005-T5 ASTM B 241 OR B 429 6061-T6
	EXTRUDED CHANNELS, COVER PLATES & BAR	ASTM B221- 6005-T5
STEEL	ANCHOR BOLTS, NUTS & WASHERS	AASHTO M164 (GALVANIZE IN ACCORDANCE WITH AASHTO SPECIFICATION M232)
	STRIP	ASTM A36
	DRIVE PINS	ASTM A-276 TYPE 302 STAINLESS STEEL

NOTES:

1. PIPE RAILING, PIPE RAILING SPLICES, COVER PLATES AND BOTTOM EXTRUDED CHANNELS SHALL BE BENT TO THE HORIZONTAL CURVE WHERE THE RADIUS OF CURVATURE IS LESS THAN 200 FEET.
2. SHOP DRAWINGS OF RAILING SHALL BE SUBMITTED FOR APPROVAL SHOWING COMPLETE DIMENSIONS AND DETAILS OF FABRICATION AND INCLUDING AN ERECTION DIAGRAM. MATERIAL BEING USED SHALL BE SPECIFIED IN THE SHOP DRAWINGS.
3. PIPE RAILING, PIPE RAILING SPLICES, COVER PLATES AND BOTTOM EXTRUDED CHANNELS MAY BE HEATED TO NOT MORE THAN 400°F FOR A PERIOD NOT TO EXCEED 30 MINUTES TO FACILITATE FORMING OR BENDING TO HORIZONTAL CURVATURE.
4. CUTTING SHALL BE DONE BY SAWING OR MILLING AND ALL CUTS SHALL BE TRUE AND SMOOTH. FLAME CUTTING WILL NOT BE PERMITTED.
5. WELDING OF ALUMINUM SHALL CONFORM TO STD. SPEC. SECTION 9-28.14(3).
6. AFTER FABRICATION, POSTS SHALL BE HEAT TREATED IN ACCORDANCE WITH SECTION 6.5 OF THE AASHTO STANDARD SPECIFICATIONS FOR STRUCTURAL SUPPORTS FOR HIGHWAY SIGNS, LUMINAIRES, AND TRAFFIC SIGNALS DATED 2001 AND INTERIMS THROUGH 2002.
A
7. ALL ALUMINUM PARTS SHALL BE GIVEN A *(CLEAR OR BRONZE) ANODIC COATING OF AT LEAST 0.0006 INCHES THICK AND SEALED TO MEET THE REQUIREMENTS OF ASTM B 580 WITH A UNIFORM FINISH.
8. PIPE RAILING, PIPE BALUSTERS AND PIPE RAILING SPLICES SHALL BE ADEQUATELY WRAPPED TO INSURE SURFACE PROTECTION DURING HANDLING AND TRANSPORTATION TO THE JOB SITE.

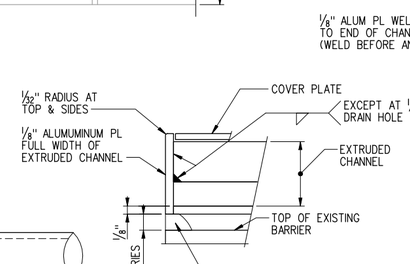

4 DETAIL

12"-1'-0" 0" 1" 2"

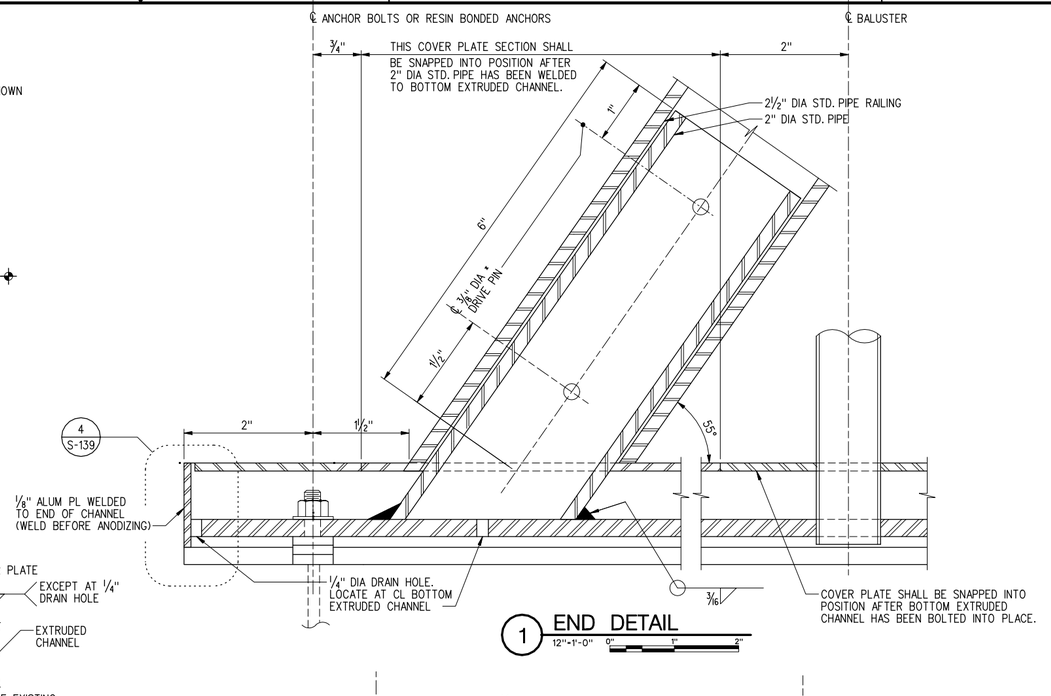

1 END DETAIL

12"-1'-0" 0" 1" 2"

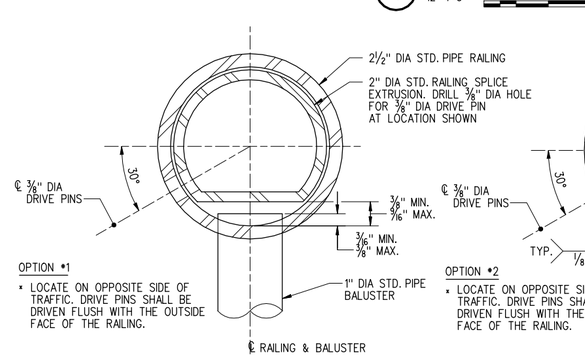

2 DETAIL (OPTION 1)

12"-1'-0" 0" 1" 2"

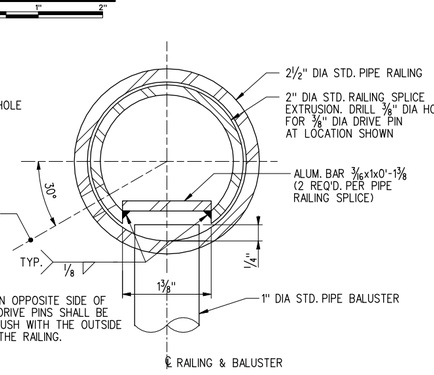

2 DETAIL (OPTION 2)

12"-1'-0" 0" 1" 2"

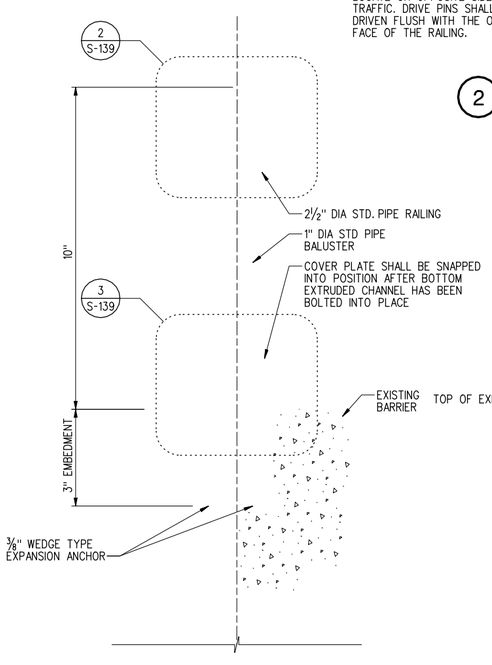

A TYP SECTION

6"-1'-0" 0" 2" 4"

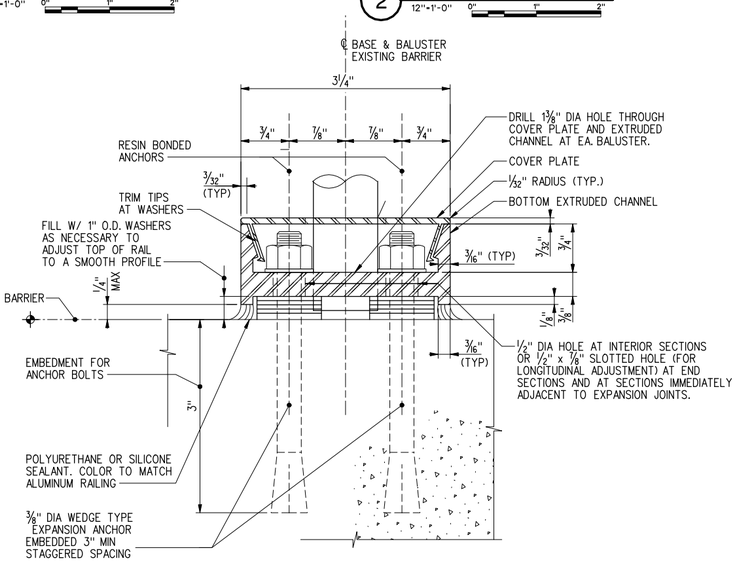

NOTE:
ANCHOR BOLTS SHALL BE POSITIONED IN A JIG DURING WELDING.

3 DETAIL

12"-1'-0" 0" 1" 2"

PEDESTRIAN BRIDGE RAILING DETAILS

S-142

US Army Corps of Engineers
Seattle District

Symbol	Description
Appr.	Date

Date: 16 MAR 06
File *
Rev. E-56-14-19
Designed by: X
Drawn by: X
Checked by: X

U.S. ARMY ENGINEER DISTRICT, SEATTLE
CORPS OF ENGINEERS
SEATTLE, WASHINGTON
Prepared by:

ADDITIONAL WATER STORAGE PROJECT
HOWARD HANSON DAM
title1
title2
GREEN RIVER WASHINGTON

Plate number:
shtid
Sheet of

DESIGN FILE: I:\AECDesigns\HHAWS\Structural\HHAWS_ts-142.DGN
DATE AND TIME PLOTTED: 8/6/2008 12:03:56 PM

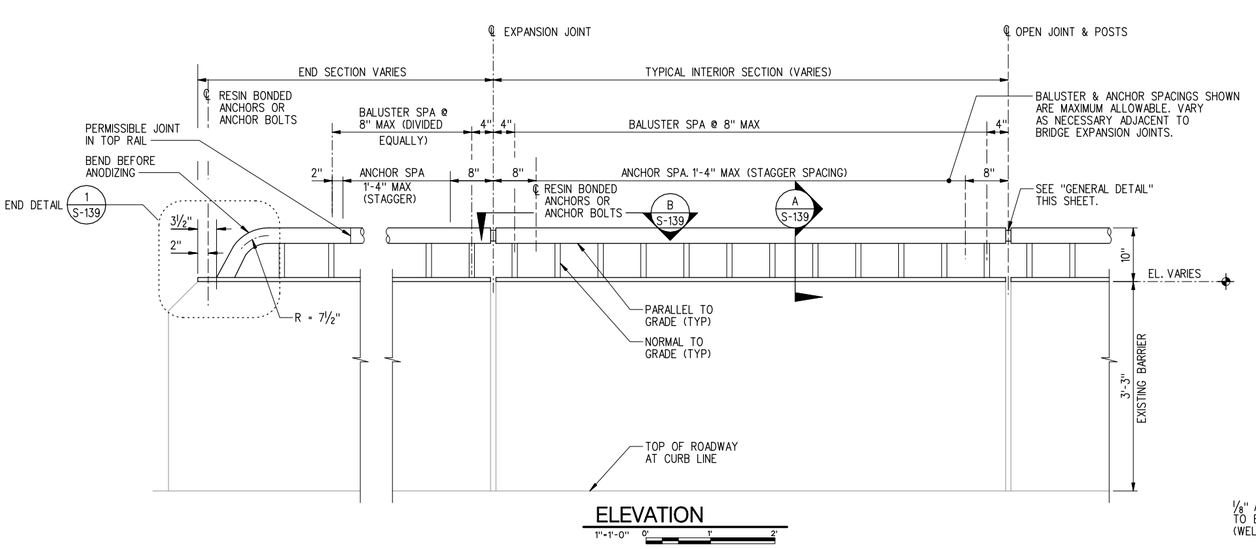

ELEVATION

1"=1'-0" 0" 1" 2"

BALUSTER AND THRIE-BEAM GUARDRAIL ATTACHMENT DETAILS NOT SHOWN.

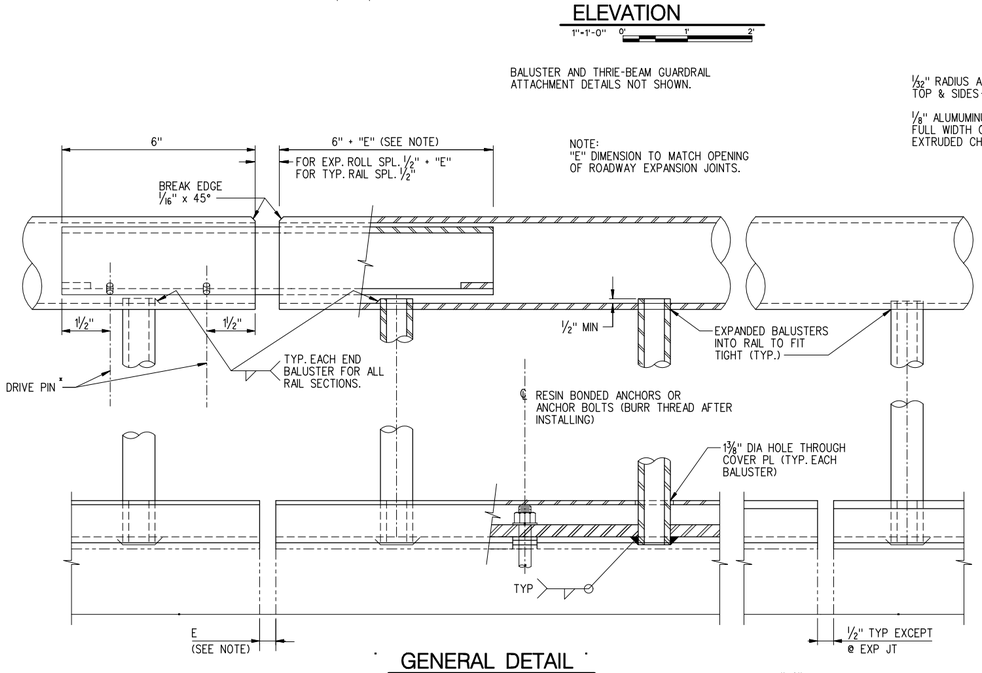

GENERAL DETAIL

6"=1'-0" 0" 3" 4"

NOTES:

1. PIPE RAILING, PIPE RAILING SPLICES, COVER PLATES AND BOTTOM EXTRUDED CHANNELS SHALL BE BENT TO THE HORIZONTAL CURVE WHERE THE RADIUS OF CURVATURE IS LESS THAN 200 FEET.
2. SHOP DRAWINGS OF RAILING SHALL BE SUBMITTED FOR APPROVAL SHOWING COMPLETE DIMENSIONS AND DETAILS OF FABRICATION AND INCLUDING AN ERECTION DIAGRAM. MATERIAL BEING USED SHALL BE SPECIFIED IN THE SHOP DRAWINGS.
3. PIPE RAILING, PIPE RAILING SPLICES, COVER PLATES AND BOTTOM EXTRUDED CHANNELS MAY BE HEATED TO NOT MORE THAN 400°F FOR A PERIOD NOT TO EXCEED 30 MINUTES TO FACILITATE FORMING OR BENDING TO HORIZONTAL CURVATURE.
4. CUTTING SHALL BE DONE BY SAWING OR MILLING AND ALL CUTS SHALL BE TRUE AND SMOOTH. FLAME CUTTING WILL NOT BE PERMITTED.
5. WELDING OF ALUMINUM SHALL CONFORM TO STD. SPEC. SECTION 9-28.14(3).
6. AFTER FABRICATION, POSTS SHALL BE HEAT TREATED IN ACCORDANCE WITH SECTION 6.5 OF THE AASHTO STANDARD SPECIFICATIONS FOR STRUCTURAL SUPPORTS FOR HIGHWAY SIGNS, LUMINAIRES, AND TRAFFIC SIGNALS DATED 2001 AND INTEREMS THROUGH 2002.
7. ALL ALUMINUM PARTS SHALL BE GIVEN A *(CLEAR OR BRONZE) ANODIC COATING OF AT LEAST 0.0006 INCHES THICK AND SEALED TO MEET THE REQUIREMENTS OF ASTM B 580 WITH A UNIFORM FINISH.
8. PIPE RAILING, PIPE BALUSTERS AND PIPE RAILING SPLICES SHALL BE ADEQUATELY WRAPPED TO INSURE SURFACE PROTECTION DURING HANDLING AND TRANSPORTATION TO THE JOB SITE.

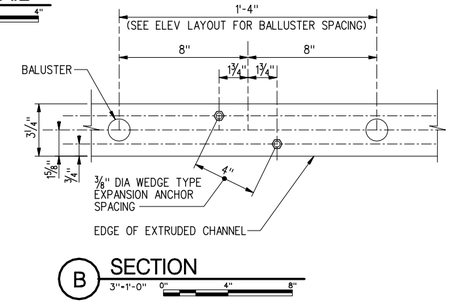

B SECTION

3"=1'-0" 0" 4" 8"

		PART	MATERIAL SPECIFICATION
ALUMINUM	MAT'L	PIPES	ASTM B221- 6005-T5 ASTM B 241 OR B 429 6061-T6
		EXTRUDED CHANNELS, COVER PLATES & BAR	ASTM B221- 6005-T5
STEEL		ANCHOR BOLTS, NUTS & WASHERS	AASHTO M164 (GALVANIZE IN ACCORDANCE WITH AASHTO SPECIFICATION M232)
		STRIP	ASTM A36
		DRIVE PINS	ASTM A-276 TYPE 302 STAINLESS STEEL

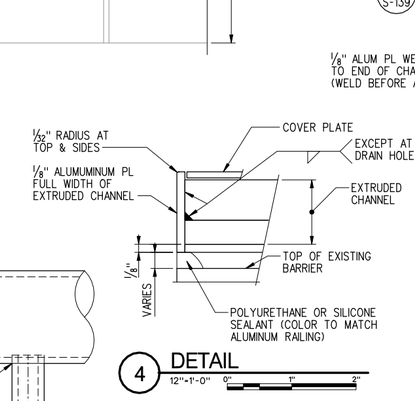

4 DETAIL

12"=1'-0" 0" 1" 2"

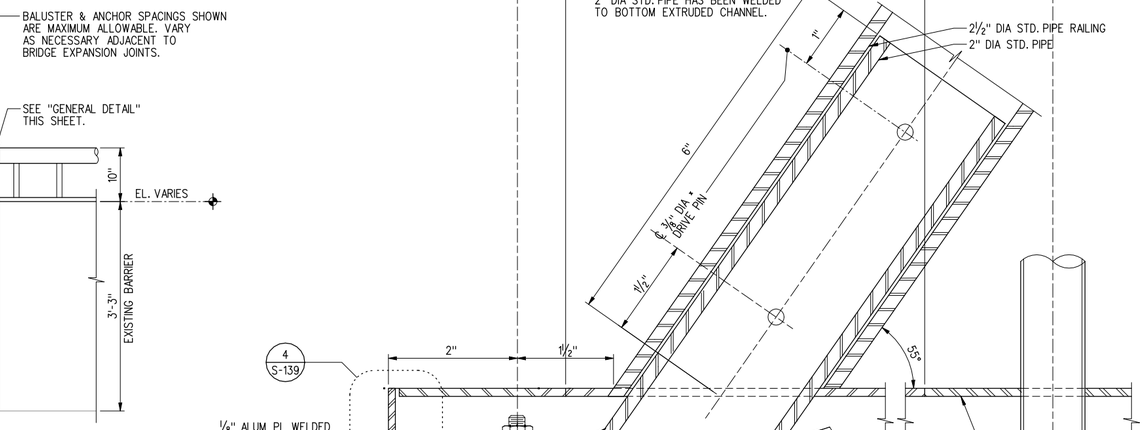

1 END DETAIL

12"=1'-0" 0" 1" 2"

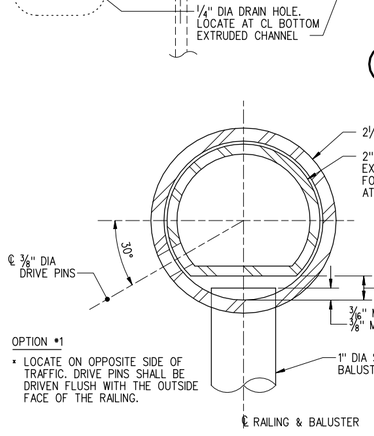

2 DETAIL (OPTION 1)

12"=1'-0" 0" 1" 2"

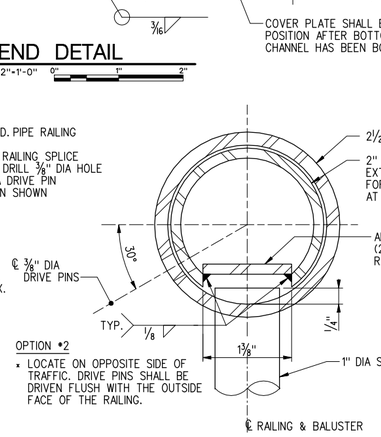

2 DETAIL (OPTION 2)

12"=1'-0" 0" 1" 2"

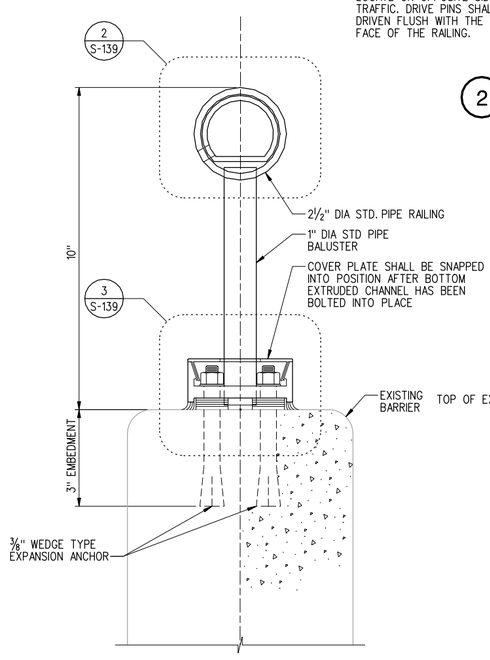

A TYP SECTION

6"=1'-0" 0" 2" 4"

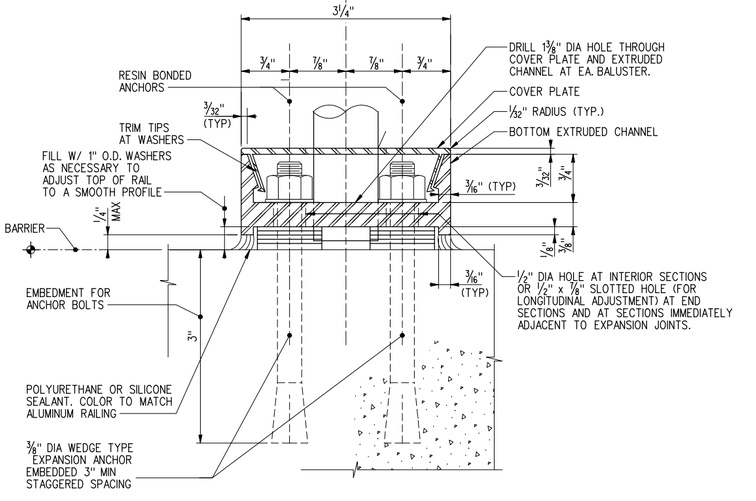

NOTE:
ANCHOR BOLTS SHALL BE POSITIONED IN A JIG DURING WELDING.

3 DETAIL

12"=1'-0" 0" 1" 2"

US Army Corps of Engineers
Seattle District

Symbol	Description	Appr.	Date
			/ /

U.S. ARMY ENGINEER DISTRICT, SEATTLE
CORPS OF ENGINEERS
SEATTLE, WASHINGTON
Prepared by:

Designed by: X
Drawn by: X
Checked by: X

Date: 16 MAR 06
File *: E-56-14-19
Rev.

ADDITIONAL WATER STORAGE PROJECT
HOWARD HANSON DAM
GREEN RIVER WASHINGTON

PEDESTRIAN BRIDGE RAILING DETAILS

Plate number: S-142
Sheet of

DESIGN FILE: I:\AECDesigns\HHAW\Structural\HHAWS_ts-142.DGN
DATE AND TIME PLOTTED: 8/6/2008 12:03:58 PM

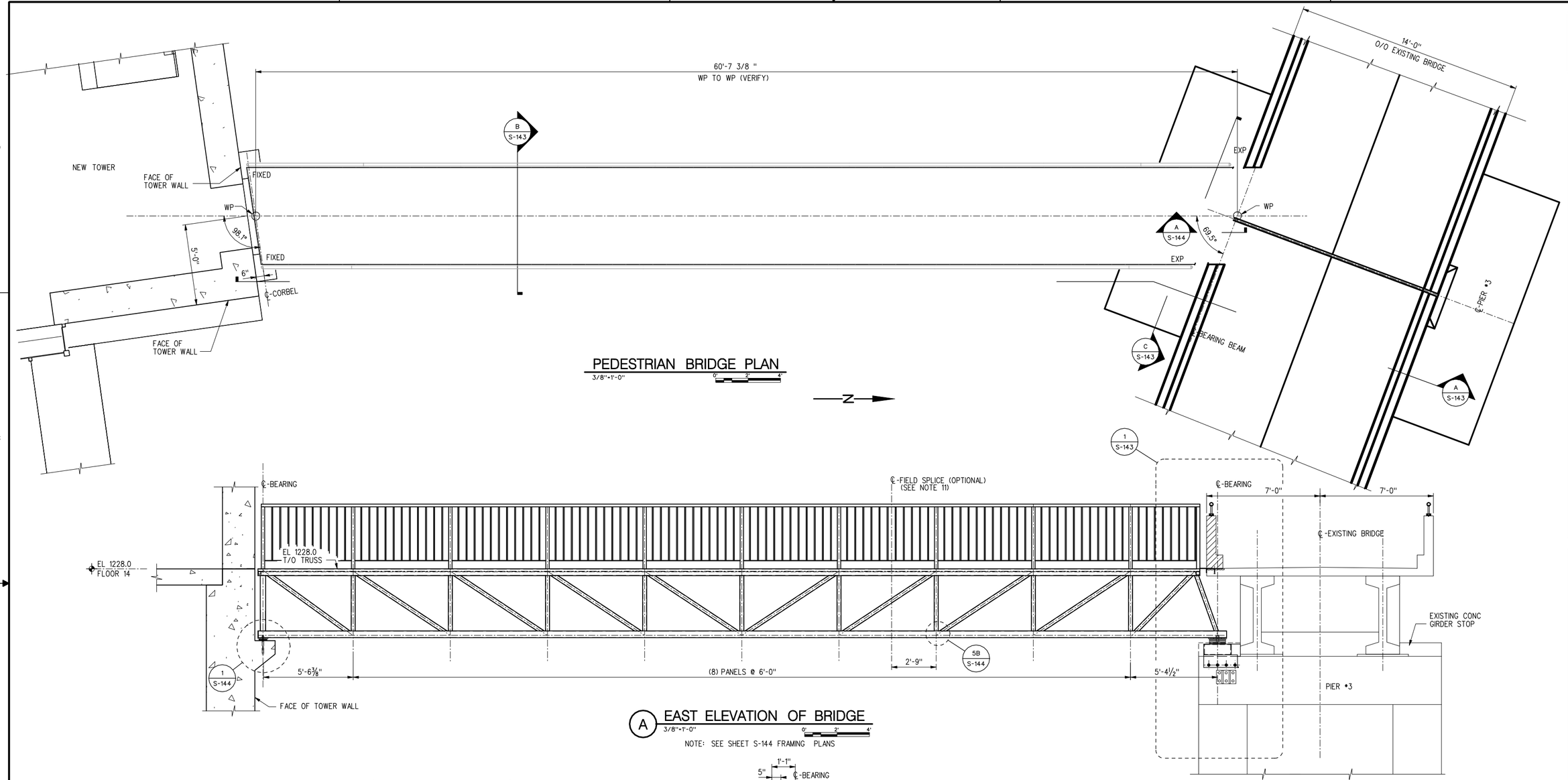

PEDESTRIAN BRIDGE PLAN

3/8"=1'-0"

A EAST ELEVATION OF BRIDGE

3/8"=1'-0"

NOTE: SEE SHEET S-144 FRAMING PLANS

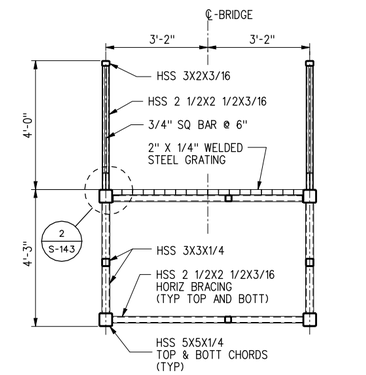

B TYPICAL SECTION

1/2"=1'-0"

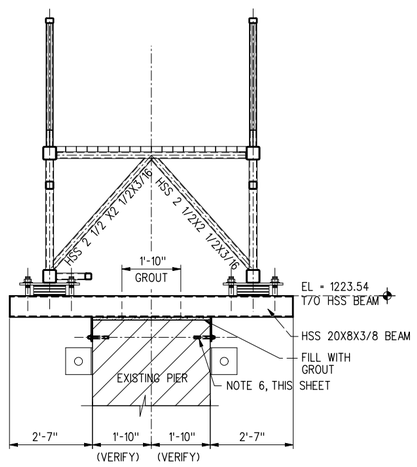

C SECTION AT PIER #3

1/2"=1'-0"

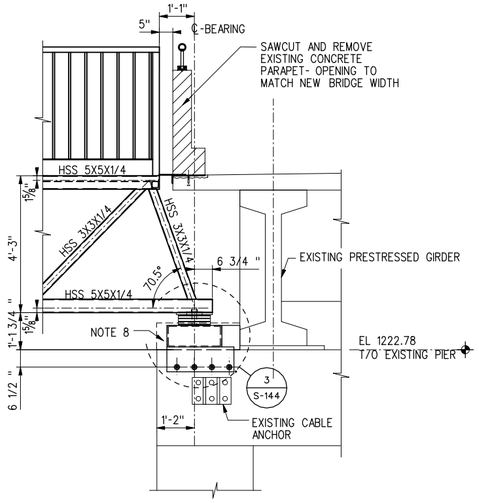

1 DETAIL

1/2"=1'-0"

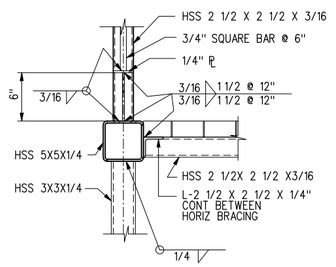

2 DETAIL

SCALE: NONE

NOTE: BRACING TYPICAL AT EACH END OF BRIDGE

NOTES:

1. PAINT SYSTEM: PRIMER- 3 MILS ORGANIC ZINC
   INTERMEDIATE COAT- 2 MILS EPOXY
   TOP COAT- 2 MILS EPOXY (COLOR PER CONTRACTING OFFICER)
2. LIVE LOAD: 85 PSF AND H-5 TRUCK LOADING
   WIND LOAD: 35 PSF ON FULLY ENCLOSED PROJECTED AREA
   SEISMIC LOAD: PEAK GROUND ACCELERATION OF 0.24g
3. HSS MEMBERS: ASTM A 500, GRADE B
   PLATES AND ANGLES: ASTM A572, GRADE 50
4. BRIDGE DECK: 2" X 1/4" WELDED STEEL GRATING (GALVANIZED) W/ BEARING BARS SPACED 1- 3/16" AND CROSS BARS SPACED 4" O.C. BEARING BARS SHALL BE ANCHORED TO SUPPORTS W/ CLIPS/FASTENERS AS SUPPLIED BY GRATING MANUFACTURER.
5. BRIDGE CONNECTIONS: FIXED AT THE TOWER, AND EXPANSION AT PIER 3
6. 3/4"ø ASTM A193 GRADE B THREADED ROD (GALVANIZED) ANCHORED WITH EPOXY ADHESIVE. EMBED ANCHOR 6" MINIMUM INTO EXISTING PIER. INSTALL ANCHORS PER MANUFACTURER'S RECOMMENDATION.
7. REMOVE SECTION OF CONCRETE GIRDER STOP FOR NEW HSS BEARING BEAM. USE CAUTION TO PREVENT DAMAGE TO EXISTING PRESTRESSED GIRDERS AND BEARING.
8. THE CONTRACTOR SHALL FIELD VERIFY ALL DIMENSIONS INDICATED PRIOR TO STEEL FABRICATION. ANY DISCREPANCIES SHALL BE REPORTED TO THE CONTACTING OFFICER.
9. NEOPRENE BEARING PADS SHALL BE 60 DUROMETER HARDNESS AND REINFORCED AS SHOWN. PROVIDE 6mm COVER FOR TOP AND BOTTOM SHIMS. BOND PADS TO BEARING SUFACES WITH AN APPROVED EPOXY ADHESIVE.
10. PROVIDE 1/4" THICK WELDED END CAPS ON TOP AND BOTTOM CHORDS.
11. OPTIONAL FULL PENETRATION WELDED FIELD SPLICE PER AWS SPECIFICATIONS.

US Army Corps of Engineers
Seattle District

Symbol	Description	Appr.	Date
			/ /

Date: 16 MAR 06
File #: E-56-14-19
Rev.

Designed by: X
Drawn by: X
Checked by: X

U.S.ARMY ENGINEER DISTRICT,SEATTLE
CORPS OF ENGINEERS
SEATTLE, WASHINGTON
Prepared by:

ADDITIONAL WATER STORAGE PROJECT
HOWARD HANSON DAM
GREEN RIVER WASHINGTON

PEDESTRIAN BRIDGE PLAN, ELEVATION AND SECTIONS

Plate number: S-143
Sheet of

FILE: I:\AEC\Designs\HHAW\Structural\HHAWS-ts-143.DGN
DESIGN FILE:
DATE AND TIME PLOTTED: 8/6/2008 12:04:10 PM

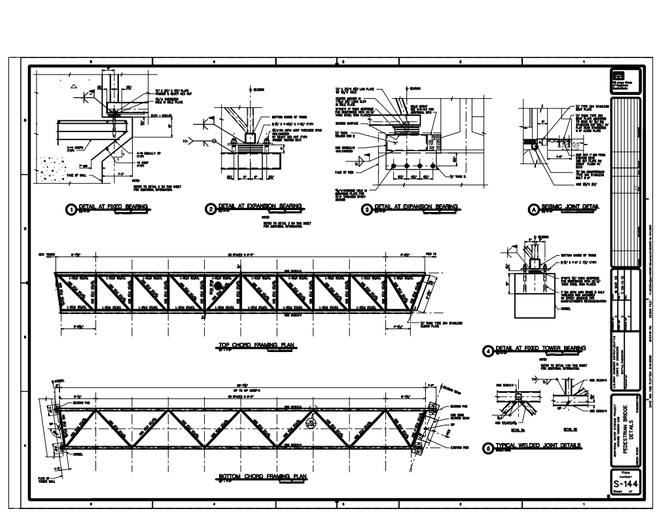
1 DETAIL AT FIXED BEARING
2 DETAIL AT EXPANSION BEARING
3 DETAIL AT EXPANSION BEARING
4 BEARING JOINT DETAIL
TOP CHORD FRAMING PLAN
5 DETAIL AT FIXED TOWER BEARING
BOTTOM CHORD FRAMING PLAN
6 TYPICAL WELDED JOINT DETAILS
PEDESTRIAN BRIDGE
DETAIL PLAN
S-144

STEEL GRATING
CONCRETE

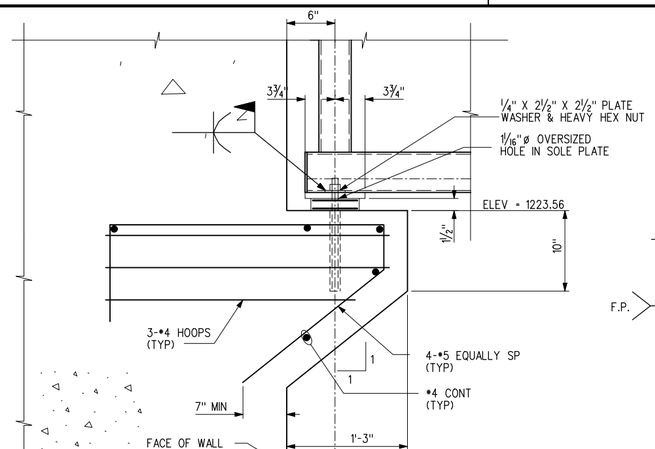

1 DETAIL AT FIXED BEARING
1½"=1'-0"

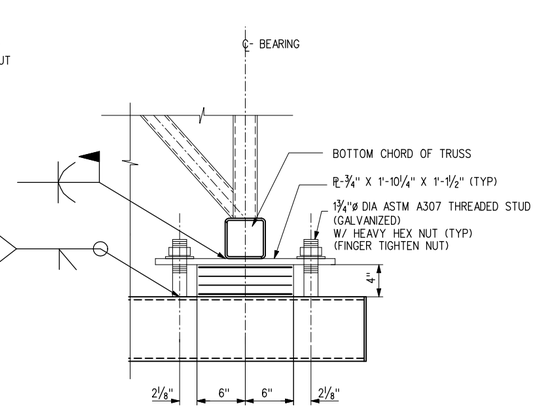

2 DETAIL AT EXPANSION BEARING
1½"=1'-0"

NOTE:
REFER TO DETAIL 3 ON THIS SHEET FOR ADDITIONAL INFORMATION.

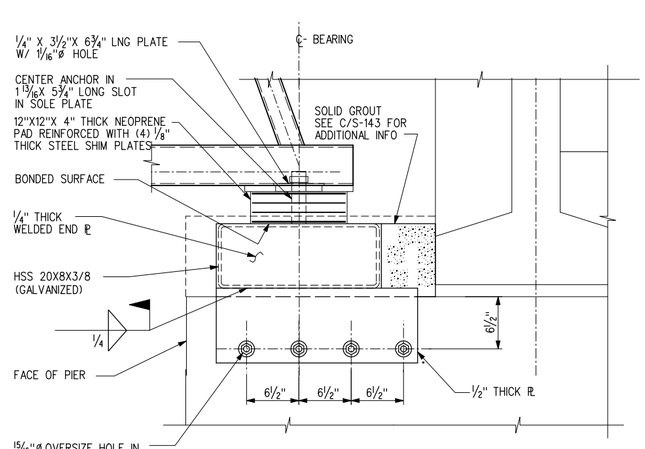

3 DETAIL AT EXPANSION BEARING
1½"=1'-0"

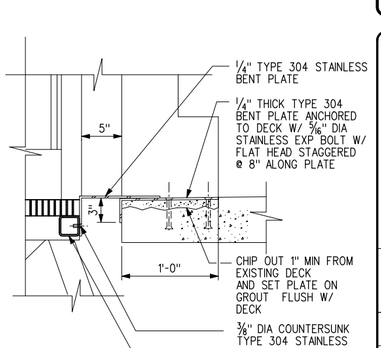

A SEISMIC JOINT DETAIL
1½"=1'-0"

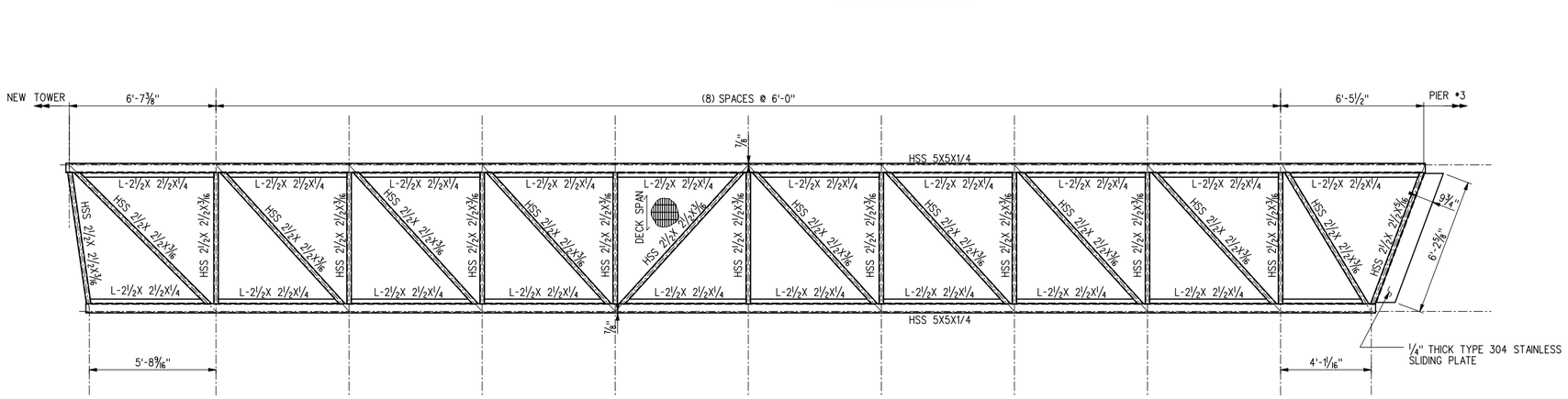

TOP CHORD FRAMING PLAN
⅜" = 1'-0"

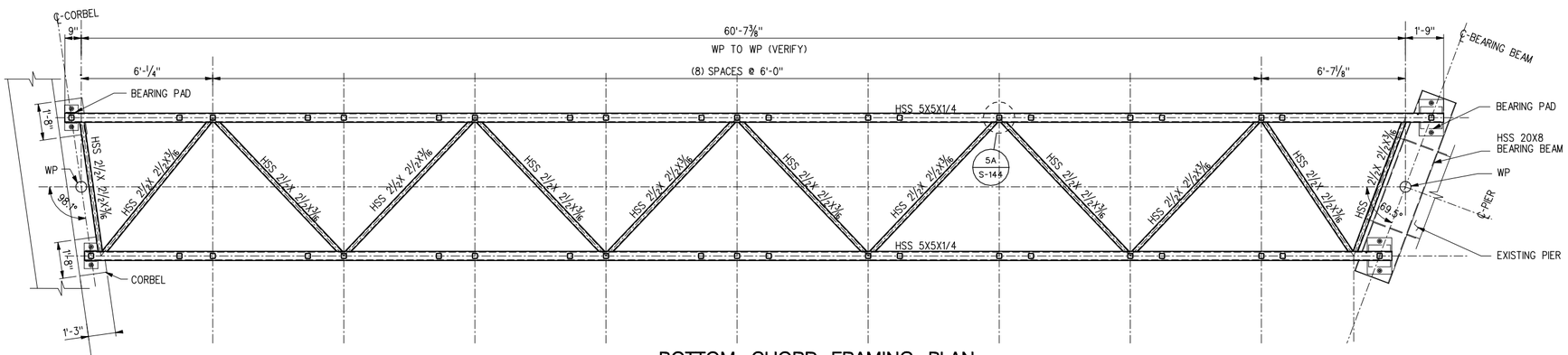

BOTTOM CHORD FRAMING PLAN
⅜" = 1'-0"

4 DETAIL AT FIXED TOWER BEARING
1½"=1'-0"

NOTE:
REFER TO DETAIL 1 ON THIS SHEET FOR ADDITIONAL INFORMATION.

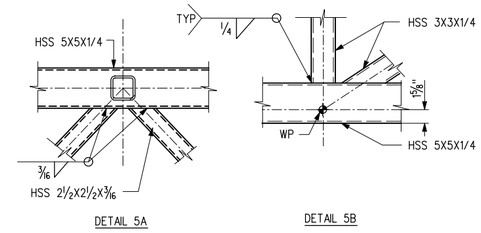

5 TYPICAL WELDED JOINT DETAILS
SCALE: NONE

US Army Corps of Engineers
Seattle District

Symbol	Date	Description
	/ /	

Designed by: X
Drawn by: X
Checked by: X
Date: 16 MAR 06
File # E-56-14-19
Rev.

U.S.ARMY ENGINEER DISTRICT,SEATTLE
CORPS OF ENGINEERS
SEATTLE,WASHINGTON
Prepared by:

ADDITIONAL WATER STORAGE PROJECT
HOWARD HANSON DAM
PEDESTRIAN BRIDGE
DETAILS
GREEN RIVER WASHINGTON

Plate number:
S-144
Sheet of

F:\AECDesigns\HHAW\Structural\HHAWS_1s_144.DGN
DESIGN FILE:
12:04:21 PM
DATE AND TIME PLOTTED: 8/6/2008

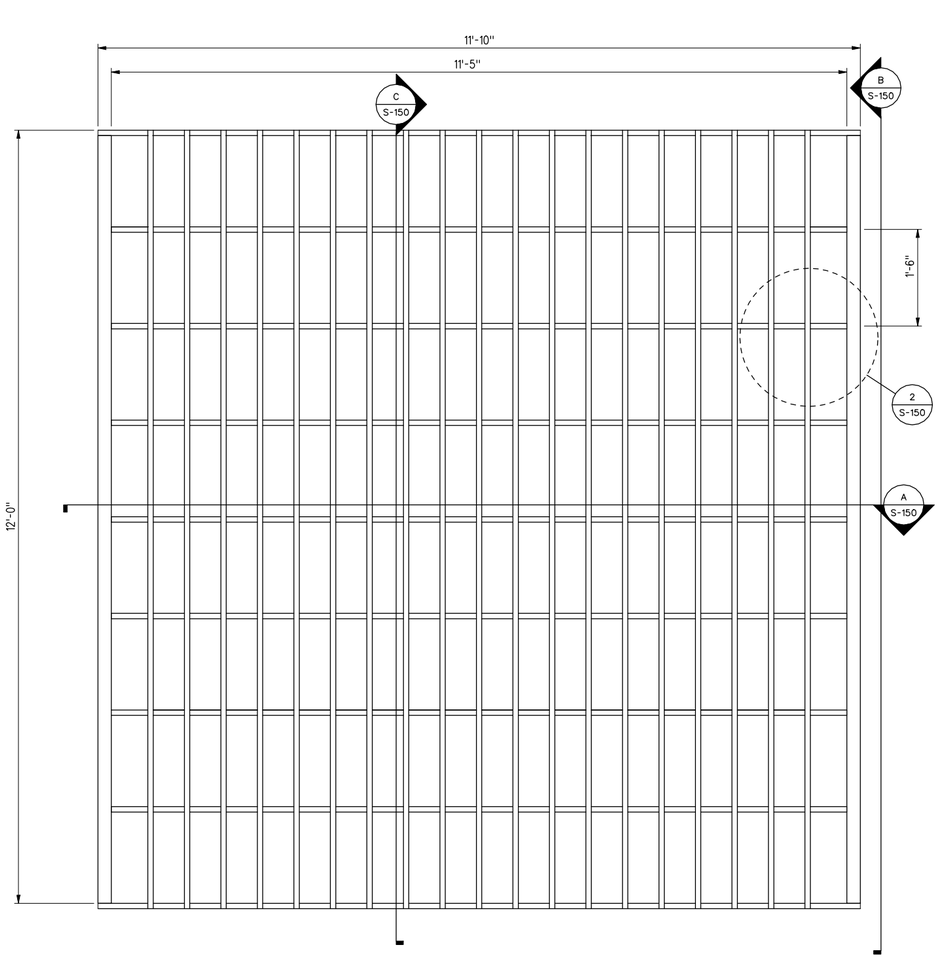

ELEVATION LOOKING DOWNSTREAM
SCALE: 1"=1'-0"



B END SECTION
SCALE: 1"=1'-0"

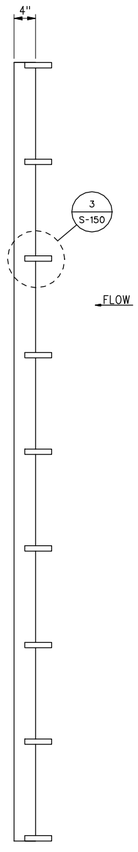

C MID SECTION
1"=1'-0"

NOTE:
ALL STEEL ASTM A36 UNO.

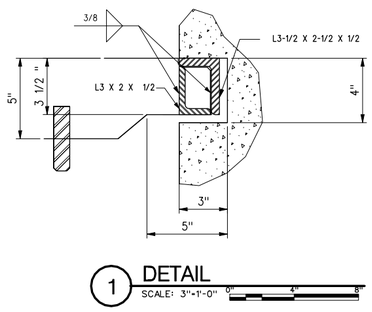

1 DETAIL
SCALE: 3"=1'-0"

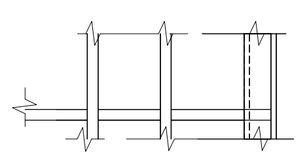

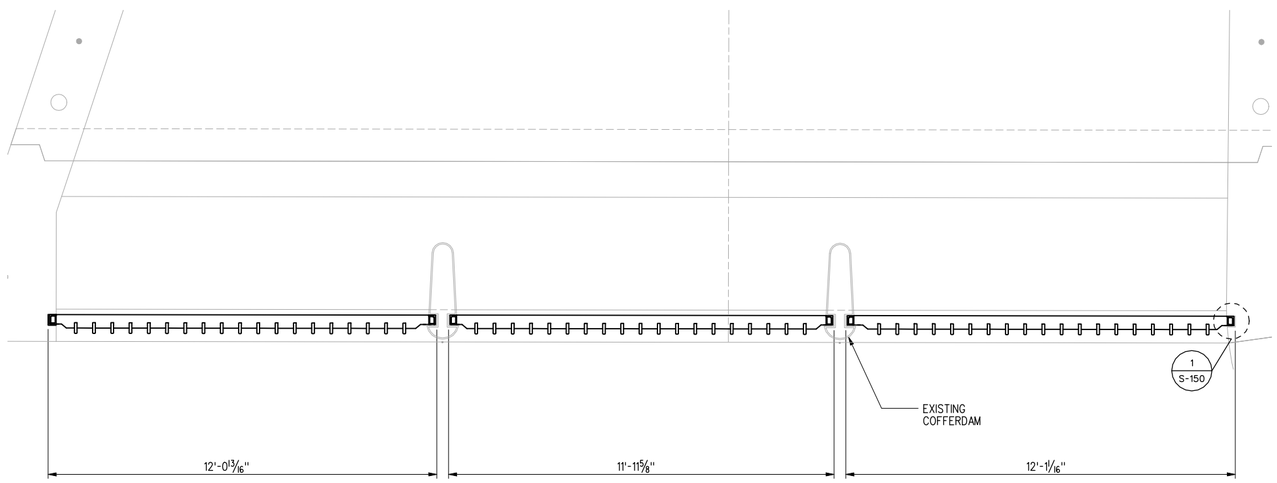

A SECTION
SCALE: ½"=1'-0"



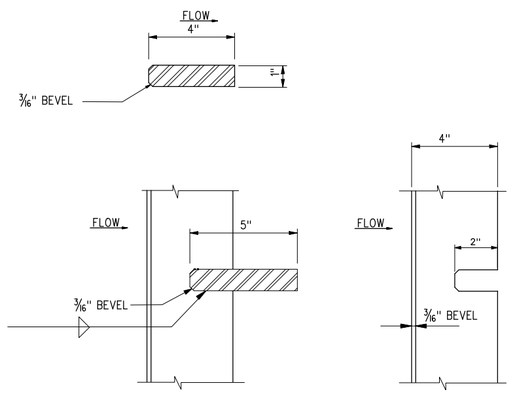

2 DETAIL
SCALE: 3"=1'-0"

3 DETAIL
SCALE: 3"=1'-0"

US Army Corps of Engineers
Seattle District

Symbol	Description	Appr.	Date
			/ /

Date: 16 MAR 06
File #
E-56-14-19
Rev.

Designed by: X
Drawn by: X
Checked by: X

U.S.ARMY ENGINEER DISTRICT,SEATTLE
CORPS OF ENGINEERS
SEATTLE, WASHINGTON
Prepared by:

ADDITIONAL WATER STORAGE PROJECT
HOWARD HANSON DAM

TRASHRACK GRILL DETAILS

GREEN RIVER WASHINGTON

Plate number:
S-150
Sheet of

I:\AEC\Designs\HHAW\Structural\HHAWS-1s-150.DGN
DESIGN FILE:
12:04:30 PM
DATE AND TIME PLOTTED: 8/6/2008

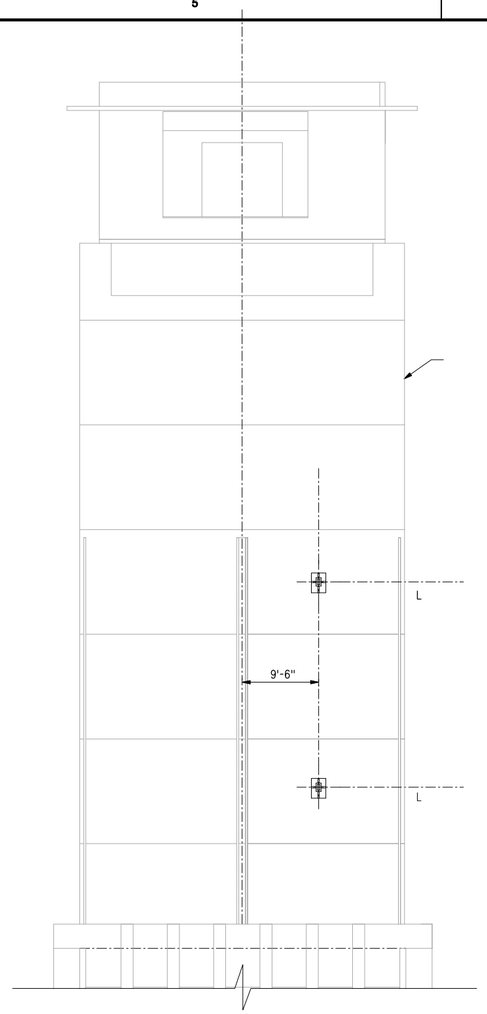

1 UPSTREAM ELEVATION
Scale: 1/8"=1'-0"

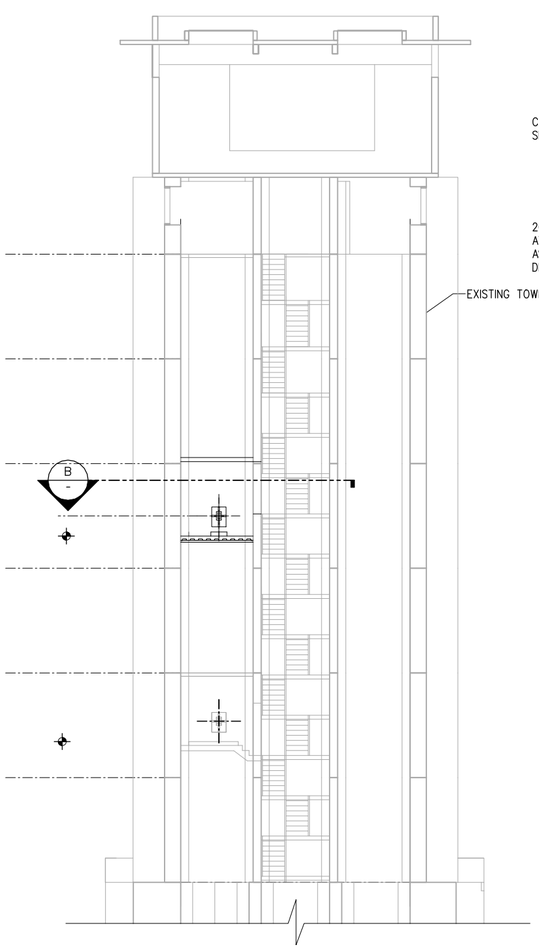

A SECTION
Scale: 1/8"=1'-0"

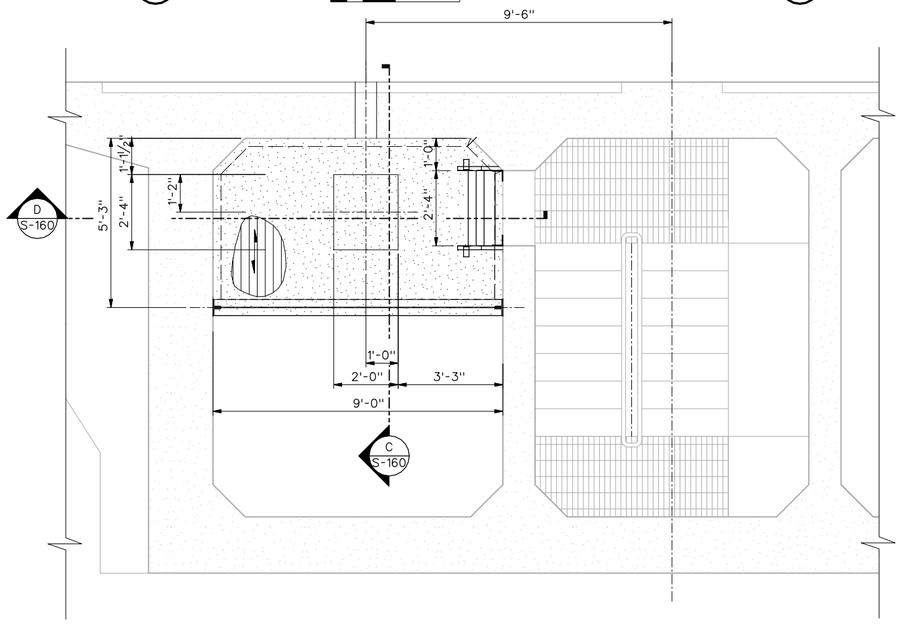

B ENLARGED FRAMING PLAN
Scale: 1/2"=1'-0"

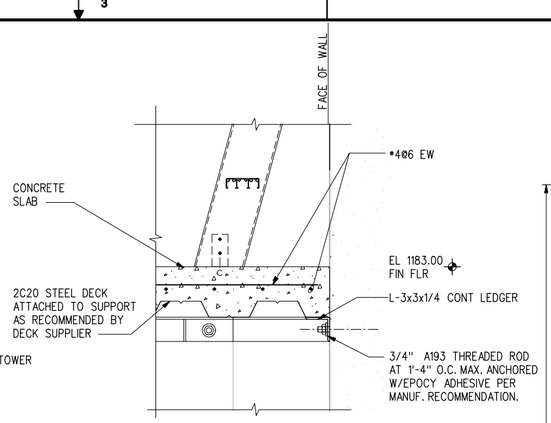

E DETAIL
Scale: 3"=1'-0"

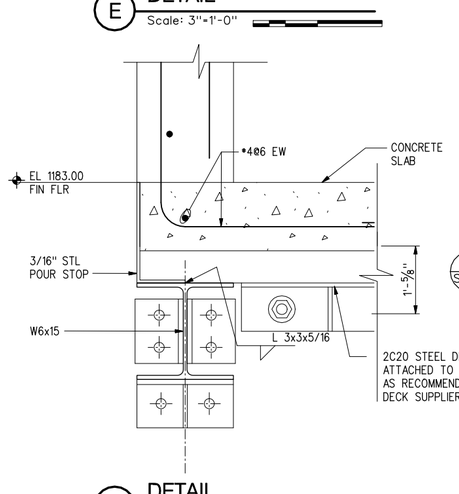

F DETAIL
Scale: 3"=1'-0"

GENERAL NOTES:
1. NOTE

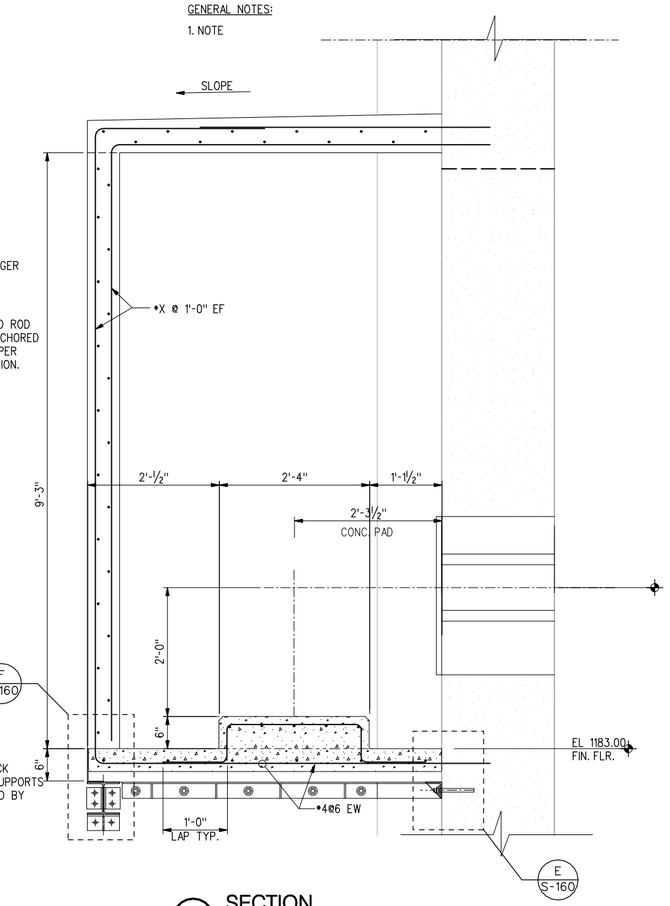

C SECTION
Scale: 1"=1'-0"

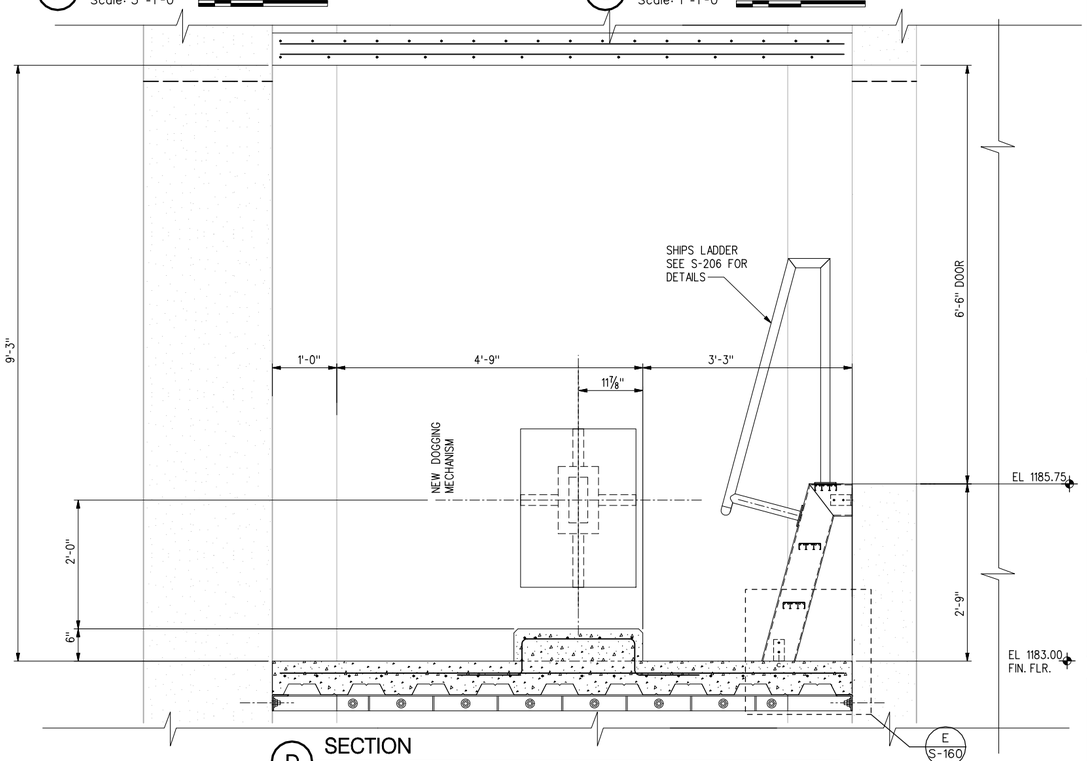

D SECTION
Scale: 1"=1'-0"

US Army Corps of Engineers
Seattle District

Symbol	Description
Appr.	
Date	/ /
Symbol	Description

Date: 16 MAR 06
File *
E-56-14-19
Rev.

Designed by: X
Drawn by: X
Checked by: X

U.S.ARMY ENGINEER DISTRICT,SEATTLE
CORPS OF ENGINEERS
SEATTLE, WASHINGTON
Prepared by:

ADDITIONAL WATER STORAGE PROJECT
HOWARD HANSON DAM
GREEN RIVER WASHINGTON

DOGGING DEVICE RELOCATION FRAMING SECTIONS & DETAILS

Plate number:
S-160
Sheet of

I:\AEC\Designs\HHAW\Structural\HHAWS-1s-160.DGN
DESIGN FILE:
12:04:33 PM
DATE AND TIME PLOTTED: 8/6/2008

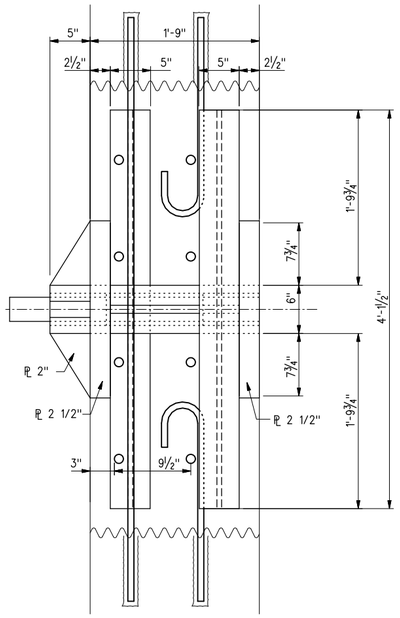

A PLAN – TOP REINFORCEMENT
11/2"=1'-0"

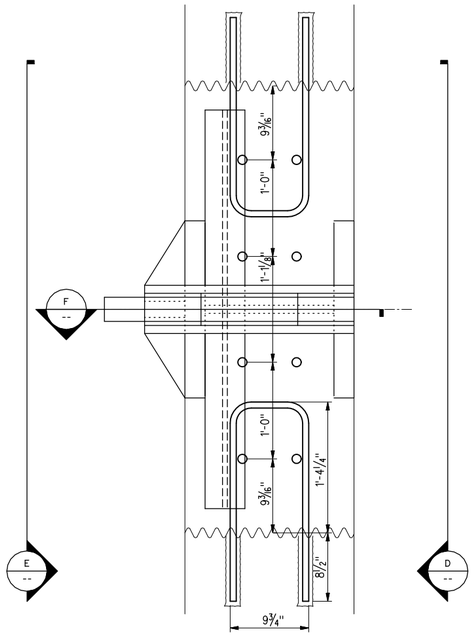

B PLAN – MIDDLE REINFORCEMENT
11/2"=1'-0"

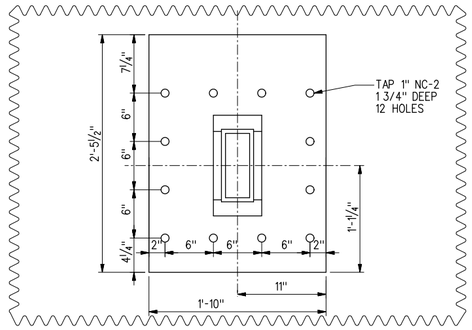

B GLAND HOUSING ATTACHMENT PLATE
11/2"=1'-0"

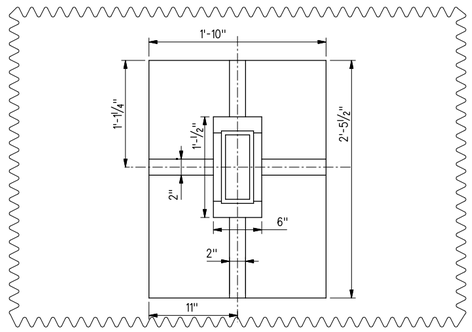

B DOGGING DEVICE EXTERIOR FACE
11/2"=1'-0"

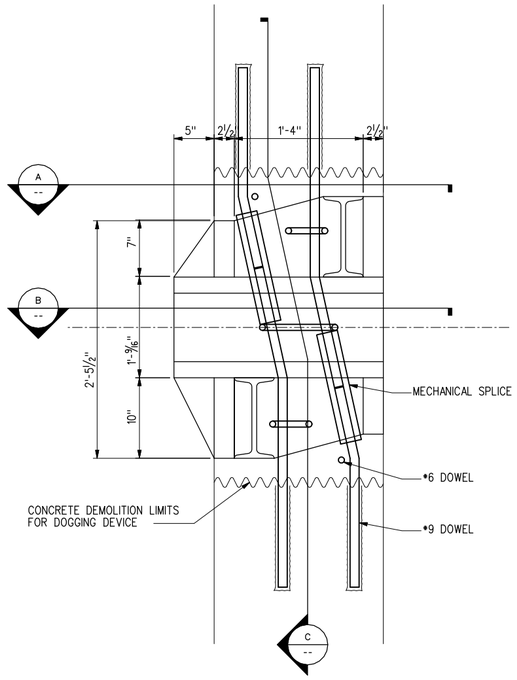

ELEVATION
11/2"=1'-0"

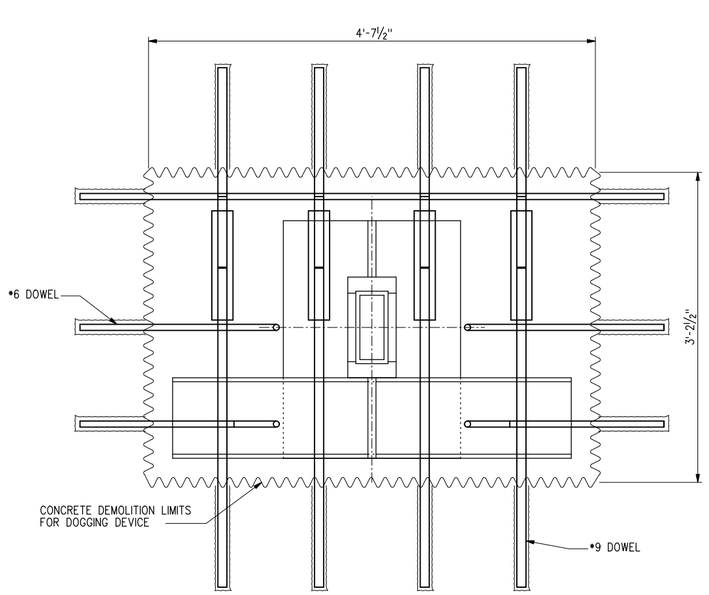

C PLAN – MIDDLE REINFORCEMENT
11/2"=1'-0"

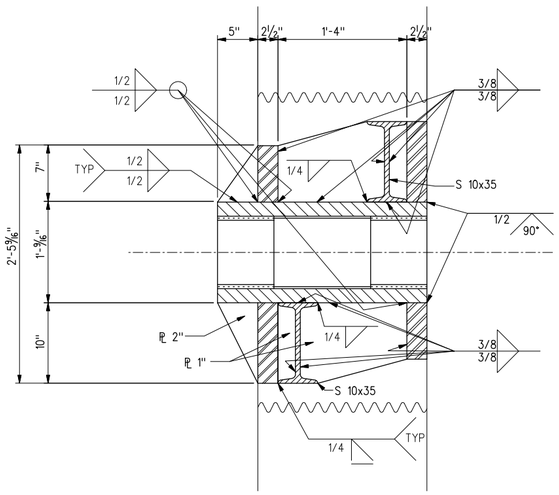

B ELEVATION OF DOG BAR CASING
11/2"=1'-0"

US Army Corps of Engineers
Seattle District

Symbol	Description	Appr.	Date
			/ /

Date: 16 MAR 06
File #
E-56-14-19
Rev.

Designed by: X
Drawn by: X
Checked by: X

U.S.ARMY ENGINEER DISTRICT,SEATTLE
CORPS OF ENGINEERS
SEATTLE, WASHINGTON

Prepared by:

ADDITIONAL WATER STORAGE PROJECT
HOWARD HANSON DAM
GREEN RIVER WASHINGTON

DOGGING DEVICE RELOCATION
SUPPORT DETAILS

Plate number:
S-161
Sheet of

FILE: I:\AEC\Designs\HHAW\Structural\HHAWS-1s-161.DGN
DESIGN FILE:
DATE AND TIME PLOTTED: 8/6/2008 12:04:42 PM

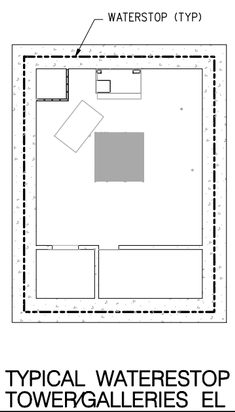

A TYPICAL WATERESTOP LAYOUT AT TOWER/GALLERIES EL 1194–1228

3/32"=1'-0"

0' 10' 20'

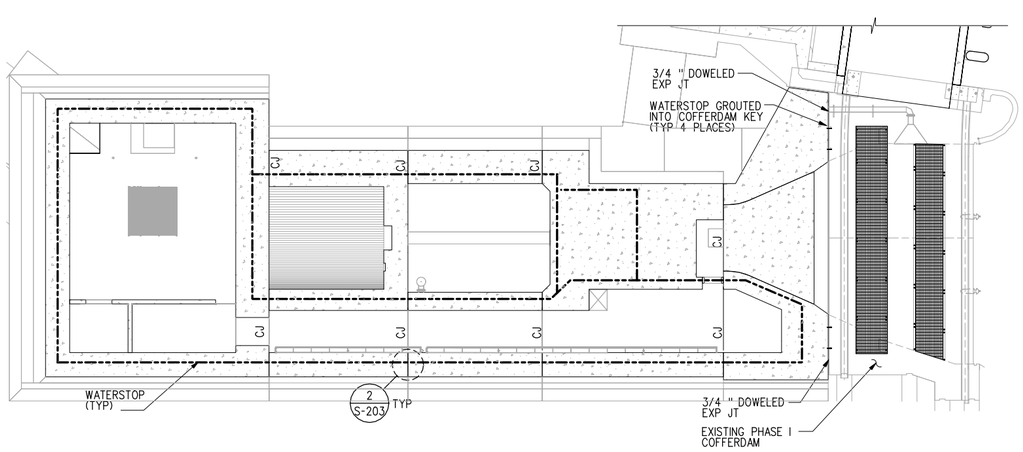

B TYPICAL WATERSTOP & CONTRACTION JOINT LAYOUT AT TOWER/GALLERIES EL. 1083 – 1181

3/32"=1'-0"

0' 10' 20'

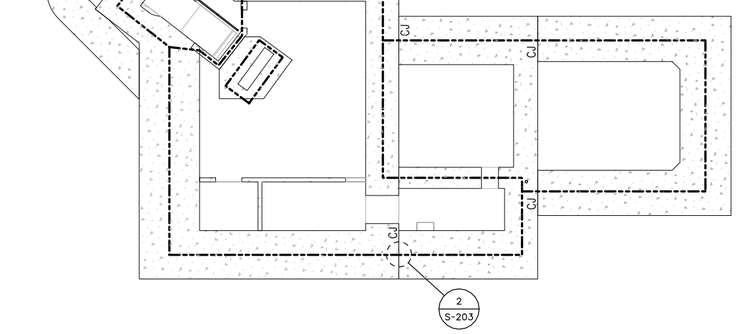

D TYPICAL WATERSTOP & CONTRACTION JOINT LAYOUT AT TOWER/GALLERIES EL. 1042

3/32"=1'-0"

0' 10' 20'

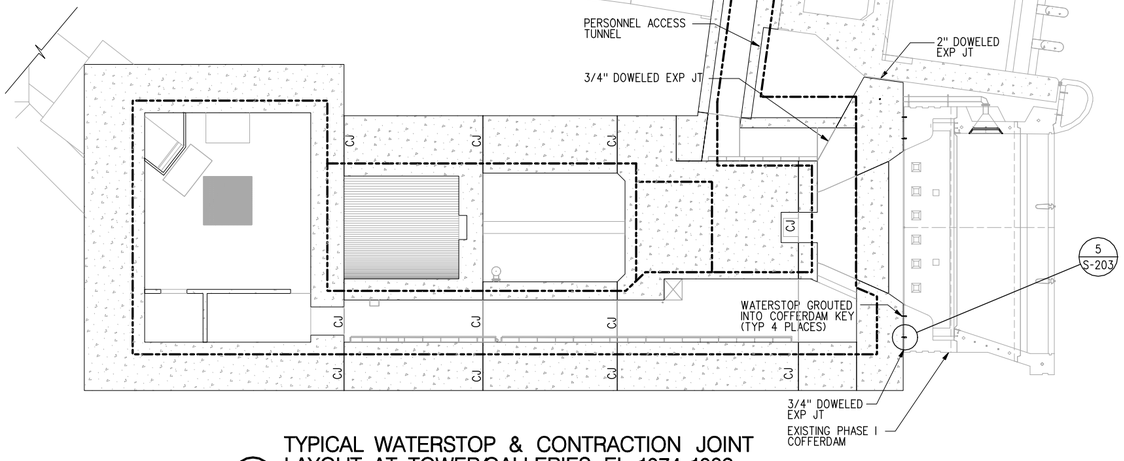

C TYPICAL WATERSTOP & CONTRACTION JOINT LAYOUT AT TOWER/GALLERIES EL. 1074–1082

3/32"=1'-0"

0' 10' 20'

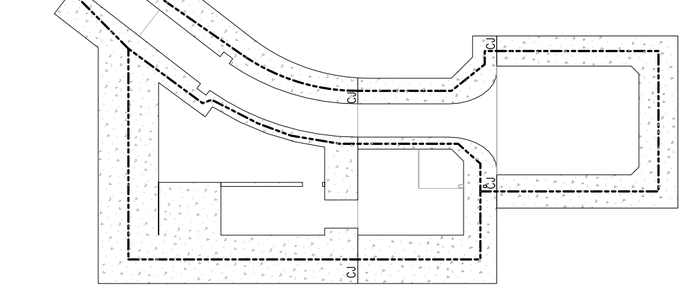

E TYPICAL WATERSTOP & CONTRACTION JOINT LAYOUT AT TOWER/GALLERIES EL. 1029 – 1037

3/32"=1'-0"

0' 10' 20'

US Army Corps of Engineers
Seattle District

Symbol	Description	Appr.	Date
			/ /

Date: 16 MAR 06
File #: E-56-14-19
Rev.

Designed by: X
Drawn by: X
Checked by: X

U.S. ARMY ENGINEER DISTRICT, SEATTLE
CORPS OF ENGINEERS
SEATTLE, WASHINGTON

Prepared by:

ADDITIONAL WATER STORAGE PROJECT
HOWARD HANSON DAM
GREEN RIVER WASHINGTON

WATERSTOP LOCATION PLANS AND DETAILS

Plate number:
S-202
Sheet of

I:\AECDesigns\HHAW\Structural\HHAWS-1s-202.DGN
DESIGN FILE: 12:04:52 PM
DATE AND TIME PLOTTED: 8/6/2008

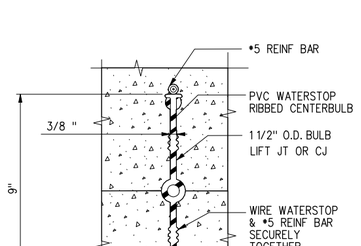

1 TYPICAL WATERSTOP DETAIL
3" = 1'-0"

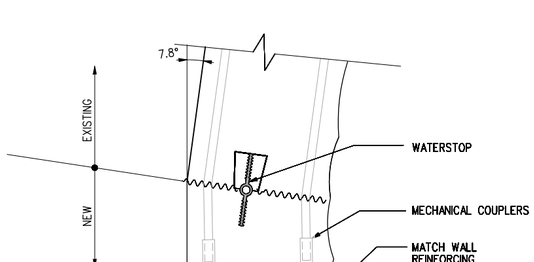

2 DETAIL
11/2"=1'-0"

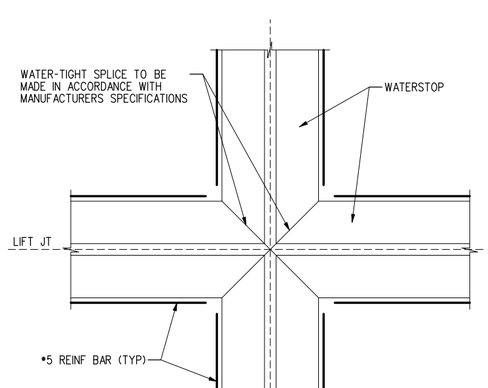

3 WATERSTOP INTERSECTION DETAIL
NOT TO SCALE

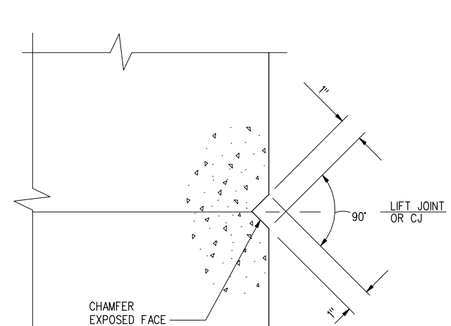

NOTE: RUSTICATION SHALL BE PLACED
ON ALL LIFT JOINTS.

4 LIFT JOINT AND CJ RUSTIFICATION
3" = 1'-0"

5 WATERSTOP BLOCKOUT DETAIL
3" = 1'-0"

1. THE WATERSTOP SHALL BE VINYLEX RL89-38 IN CONFORMANCE TO COE CRD-C 572 OR APPROVED EQUAL.
2. THE NON-SHRINK GROUT SHALL HAVE COMPRESSIVE STRENGTH OF 5000 PSI AT 28 DAYS.

US Army Corps of Engineers
Seattle District

Symbol	Date	Description
	/ /	

Date: 16 MAR 06
File #: E-56-14-19
Rev.

Designed by: X
Drawn by: X
Checked by: X

U.S.ARMY ENGINEER DISTRICT,SEATTLE
CORPS OF ENGINEERS
SEATTLE, WASHINGTON

Prepared by:

ADDITIONAL WATER STORAGE PROJECT
HOWARD HANSON DAM
GREEN RIVER WASHINGTON

WATERSTOP DETAILS

Plate number:
S-203
Sheet of

DESIGN FILE: F:\AEC\Designs\HHAW\Structural\HHAWS_1s-203.DGN
DATE AND TIME PLOTTED: 8/6/2008 12:05:05 PM

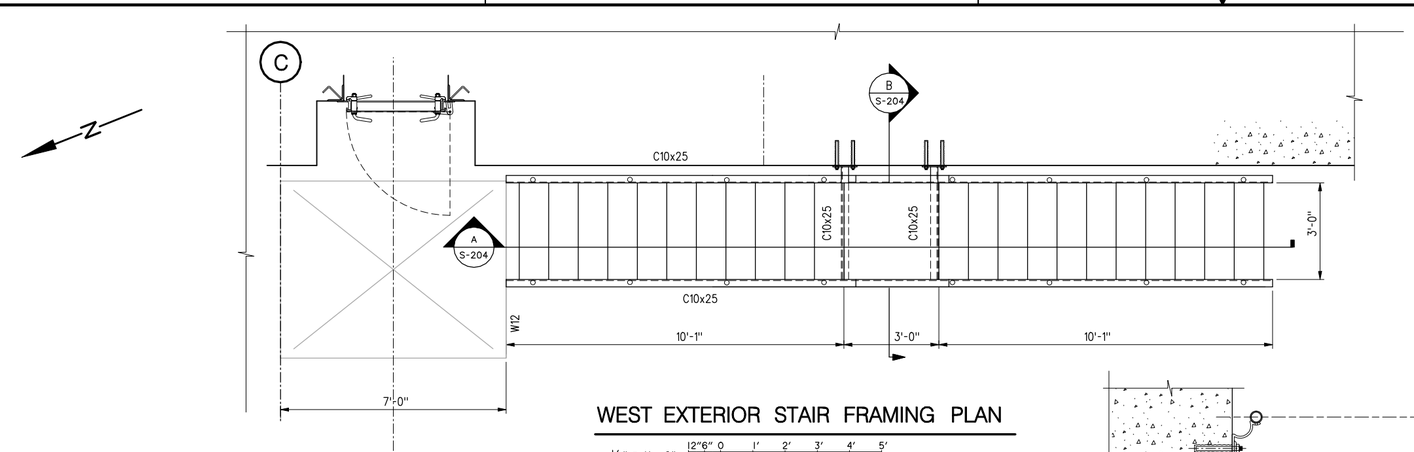

WEST EXTERIOR STAIR FRAMING PLAN

½" = 1' - 0" 12"6" 0 1' 2' 3' 4' 5'

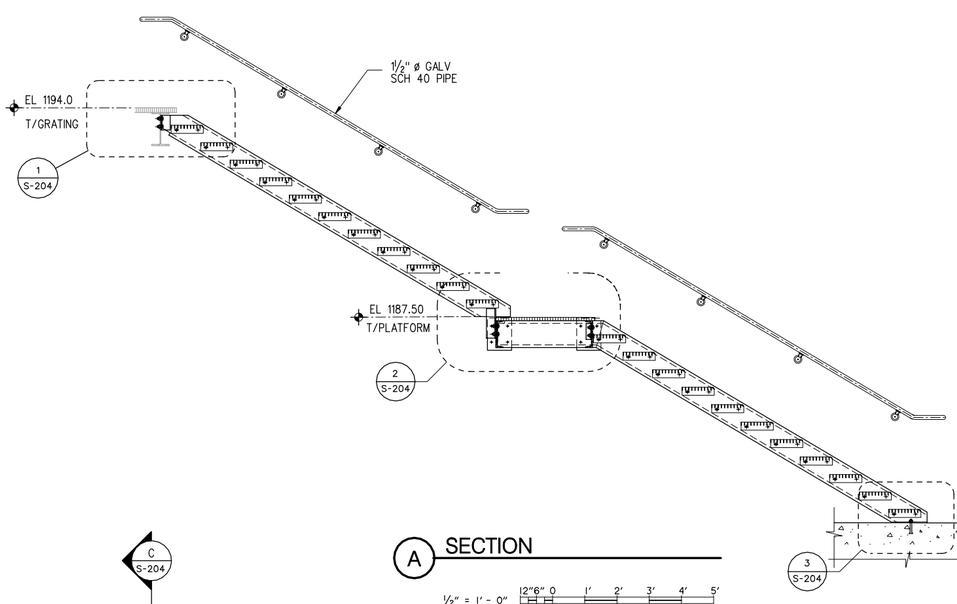

A SECTION

½" = 1' - 0" 12"6" 0 1' 2' 3' 4' 5'

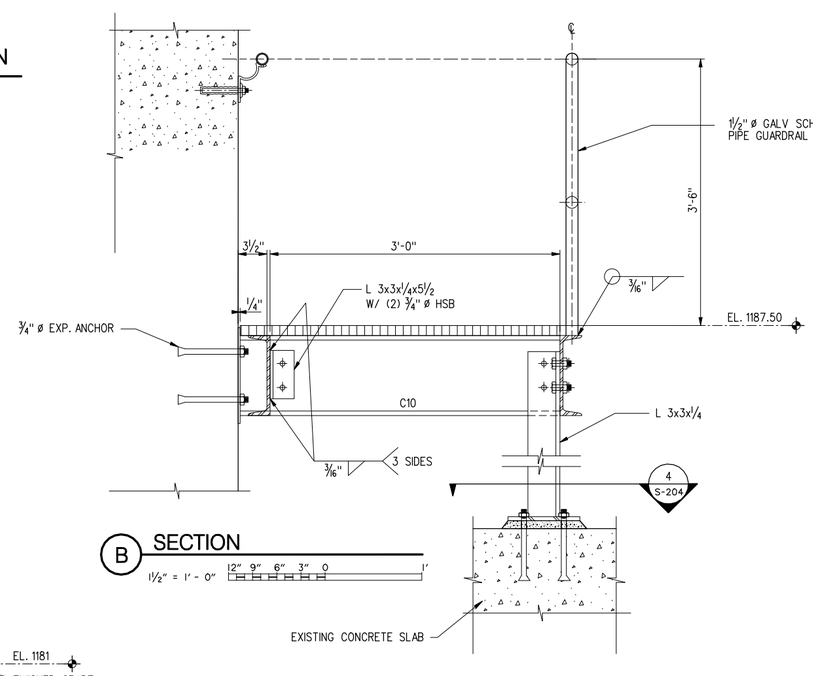

B SECTION

1½" = 1' - 0" 12" 9" 6" 3" 0 1'

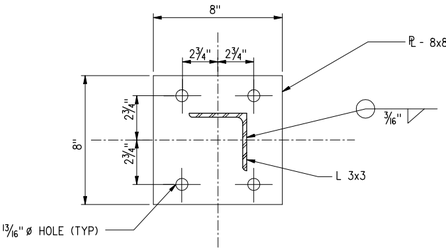

PLAN

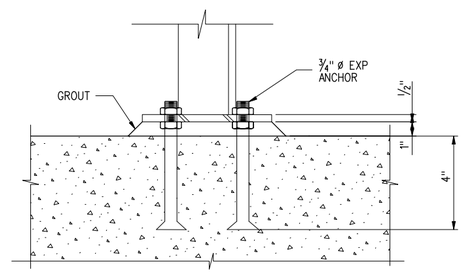

4 COLUMN BASE DETAIL

3" = 1' - 0" 1" 0 3" 6" 9" 12"

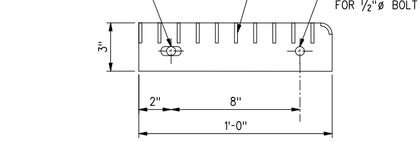

5 STAIR DETAIL

3" = 1' - 0" 1" 0 3" 6" 9" 12"

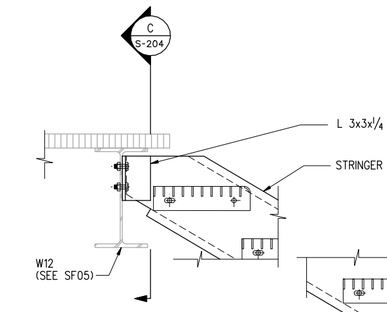

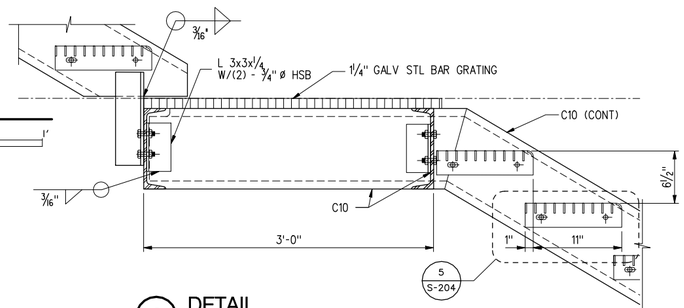

1 DETAIL

1½" = 1' - 0" 12" 9" 6" 3" 0 1'

2 DETAIL

1½" = 1' - 0" 12" 9" 6" 3" 0 1'

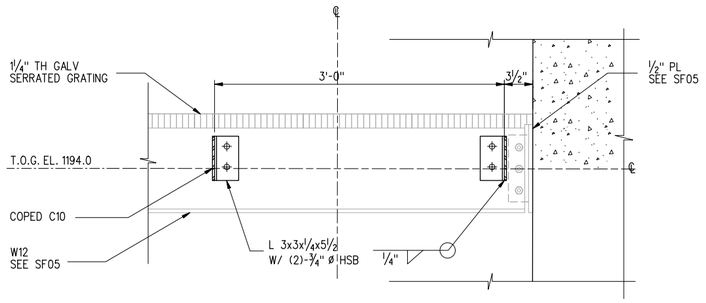

C SECTION

1½" = 1' - 0" 12" 9" 6" 3" 0 1'

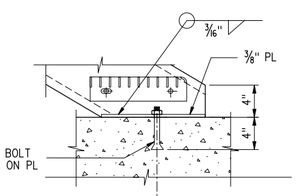

3 DETAIL

1½" = 1' - 0" 12" 9" 6" 3" 0 1'

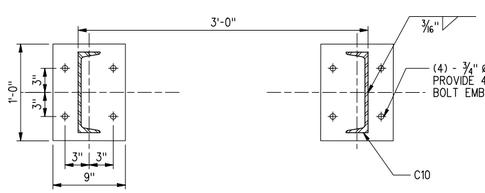

2 DETAIL

1½" = 1' - 0" 12" 9" 6" 3" 0 1'

NOTES:

1. ANCHORS SHALL BE GALVANIZED EPOXY ADHESIVE ANCHORS, ASTM A193, GRADE B7, OR APPROVED EQUAL.
2. ALL CONNECTION BOLTS SHALL BE ASTM A325(N) ¾", UNLESS OTHERWISE NOTED.
3. ALL STEEL SHAPES, PLATES AND SHIMS SHALL BE GALVANIZED ASTM A36, UNLESS OTHERWISE NOTED.
4. ALL WELDS SHALL BE IN CONFORMANCE WITH AWS REQUIREMENTS.
5. THE STEEL GRATING BARS AND STAIR TREAD BARS SHALL BE GALVANIZED 1¼" x3⁄16" @ 13⁄16" SPACING AND ASTM A36 OR APPROVED EQUAL.

US Army Corps of Engineers
Seattle District

Symbol	Description
Appr.	
Date	/ /

Date: 16 MAR 06
File #
Rev. E-56-14-19

Designed by: X
Drawn by: X
Checked by: X

U.S.ARMY ENGINEER DISTRICT,SEATTLE
CORPS OF ENGINEERS
SEATTLE, WASHINGTON
Prepared by:

ADDITIONAL WATER STORAGE PROJECT
HOWARD HANSON DAM

STEEL STAIR DETAILS

GREEN RIVER WASHINGTON

Plate number:
S-204
Sheet of

DESIGN FILE: I:\AEC\Designs\HHAW\Structural\HHAWS_1s-204.DGN
DATE AND TIME PLOTTED: 8/6/2008 12:05:14 PM

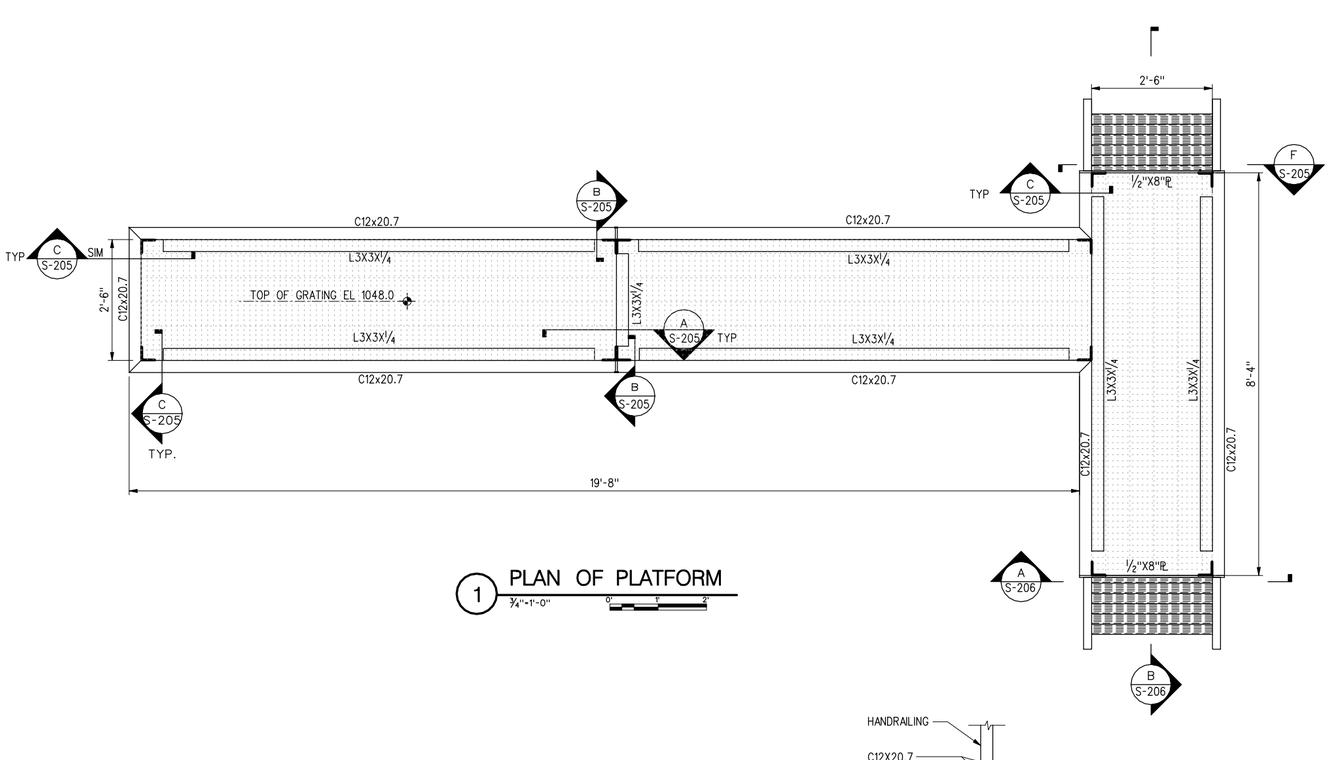

1 PLAN OF PLATFORM
3/4"-1'-0"

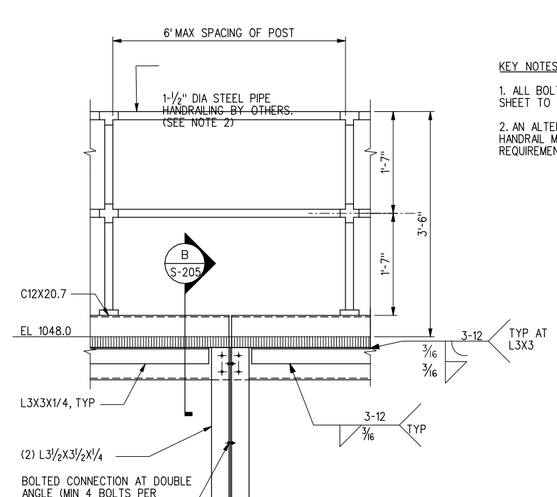

KEY NOTES:

1. ALL BOLTED CONNECTIONS IN THIS SHEET TO BE ½" DIA. A325N.

2. AN ALTERNATE MANUFACTURED HANDRAIL MEETING ALL SAFTY CODE REQUIREMENTS MAY BE SUBMITTED FOR APPROVAL.

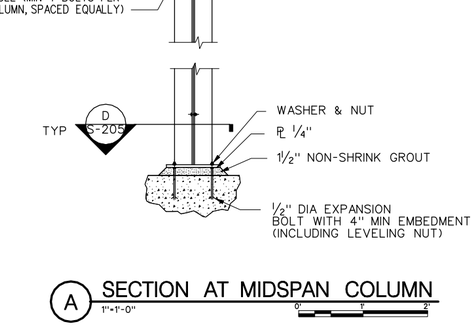

A SECTION AT MIDSPAN COLUMN
1"=1'-0"

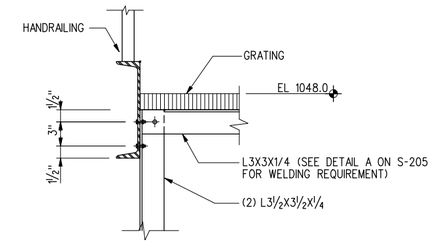

B SECTION THROUGH CHANNEL
1½"=1'-0"

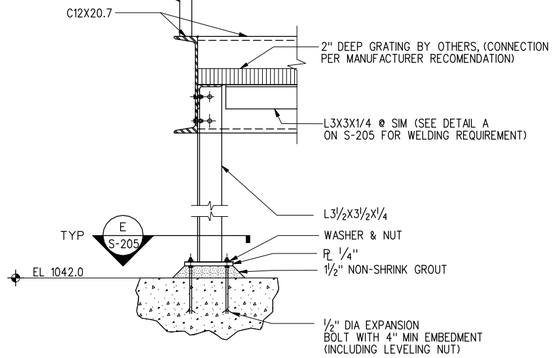

C SECTION AT L3-1/2 X 3-1/2 COLUMN
1½"=1'-0"

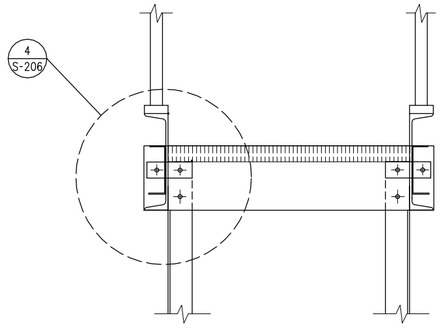

F PLATFORM ELEV AT SHIP LADDER
1½"=1'-0"

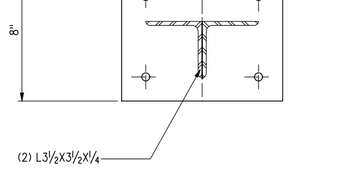

D BASE PLATE @ WT COLUMN
3"=1'-0"

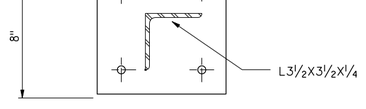

E BASE PLATE AT ANGLE COLUMN
3"=1'-0"

US Army Corps of Engineers
Seattle District

Symbol	Description
Appr.	Symbol
/ /	Date
	Description

Date: 16 MAR 06
File #
E-56-14-19
Rev.
Designed by:
Drawn by:
Checked by:

U.S.ARMY ENGINEER DISTRICT,SEATTLE
CORPS OF ENGINEERS
SEATTLE,WASHINGTON
Prepared by:

ADDITIONAL WATER STORAGE PROJECT
HOWARD HANSON DAM

PLATFORM DETAILS

GREEN RIVER WASHINGTON

Plate number:
S-205
Sheet of

DESIGN FILE: F:\AECDesigns\HHAW\Structural\HHAWS-1s-205.DGN
DATE AND TIME PLOTTED: 8/6/2008 12:05:18 PM

NOTES:

1. AN ALTERNATE MANUFACTURED SHIPS LADDER MEETING THE SAME HEIGHT AND CLEARANCE REQUIREMENTS SHOWN MAY BE SUBMITTED FOR APPROVAL.

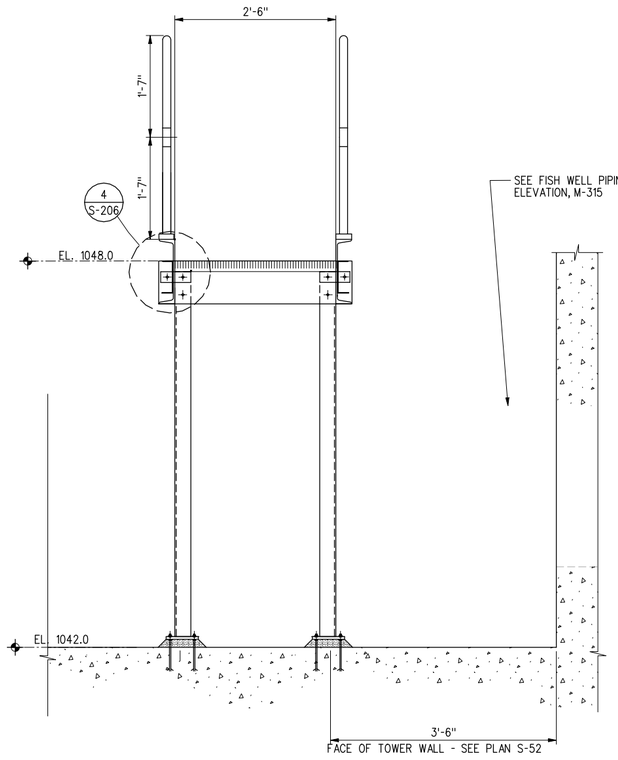

A PLATFORM ELEVATION
1"=1'-0" 0" 1" 2"

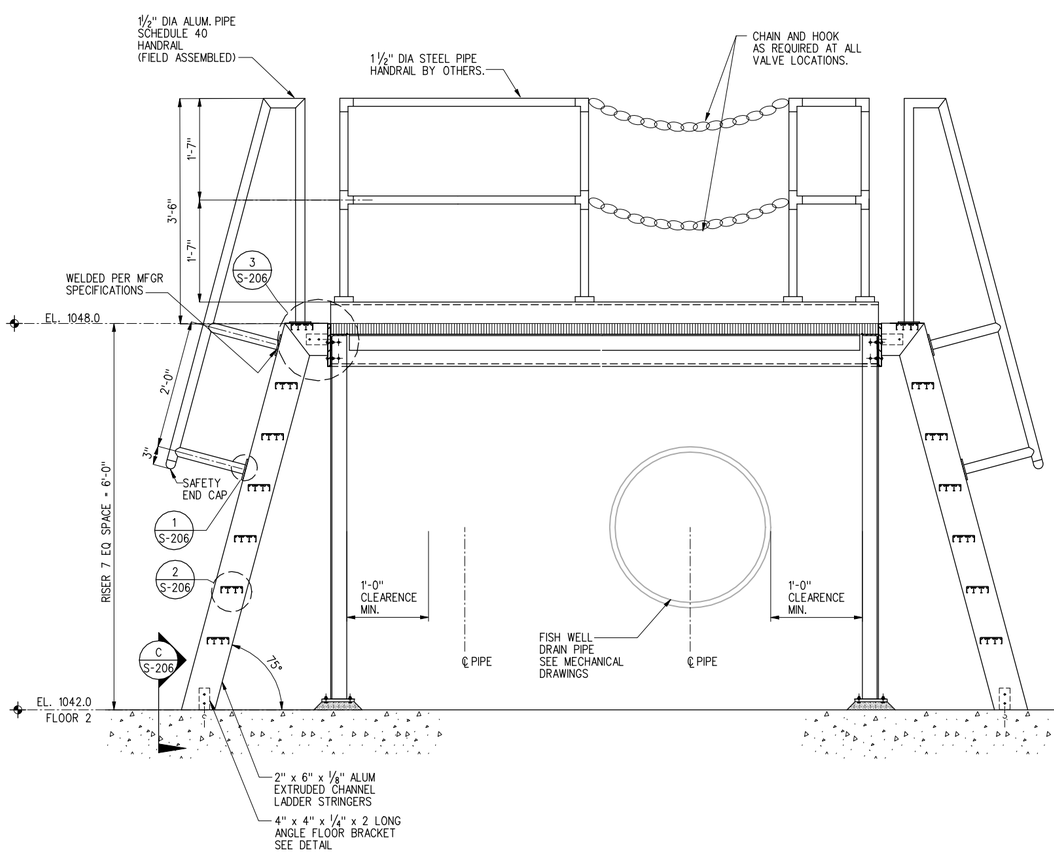

B PLATFORM ELEVATION AT VALVE LOCTION
1"=1'-0" 0" 1" 2"

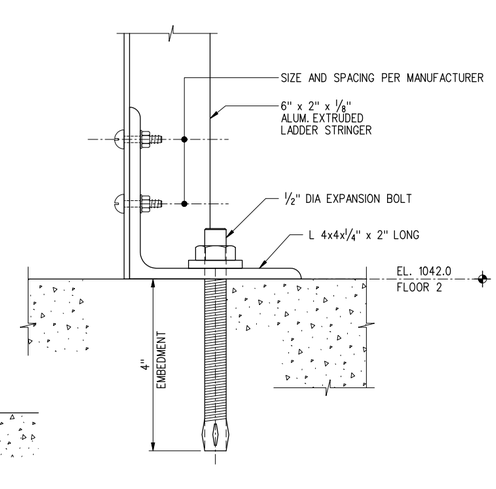

C SECTION
6"=1'-0" 0" 2" 4"

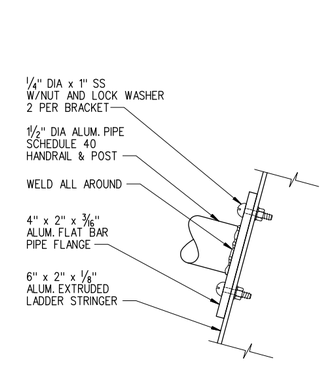

1 DETAIL
6"=1'-0" 0" 2" 4"

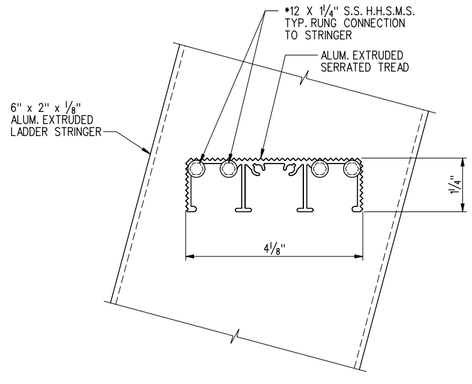

2 DETAIL
6"=1'-0" 0" 2" 4"

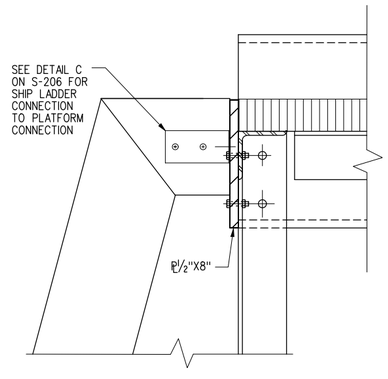

3 DETAIL
3"=1'-0" 0" 2" 4"

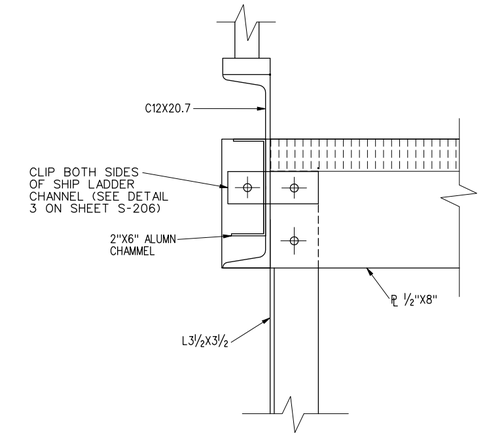

4 DETAIL
3"=1'-0" 0" 2" 4"

US Army Corps of Engineers
Seattle District

Symbol	Date	Appr.	Description
	/ /		

Designed by:	Date: 16 MAR 06
Drawn by: X	File # E-56-14-19
Checked by: X	Rev.

U.S. ARMY ENGINEER DISTRICT, SEATTLE
CORPS OF ENGINEERS
SEATTLE, WASHINGTON
Prepared by:

ADDITIONAL WATER STORAGE PROJECT
HOWARD HANSON DAM
SHIPS LADDER TYPICAL DETAILS
GREEN RIVER WASHINGTON

Plate number:
S-206
Sheet of

DATE AND TIME PLOTTED: 8/6/2008 12:05:27 PM DESIGN FILE: I:\ACEDesigns\HHAW\Structural\HHAWS-1s-206.DGN

DATE AND TIME PLOTTED: 8/6/2008 12:05:29 PM DESIGN FILE: i:\AECDesigns\HHAW\Structural\HHAWS-1s-206.DGN

ADDITIONAL WATER STORAGE PROJECT
HOWARD HANSON DAM
GREEN RIVER WASHINGTON

Plate number:
Sheet of

U.S.ARMY ENGINEER DISTRICT,SEATTLE
CORPS OF ENGINEERS
SEATTLE, WASHINGTON
Prepared by:

Designed by:	Date:
X	16 MAR 06
Drawn by:	File ◆
X	E-56-14-19
Checked by:	Rev.
X	

Symbol	Description	Date	Appr.	Symbol	Description
		/ /			

US Army Corps of Engineers
Seattle District

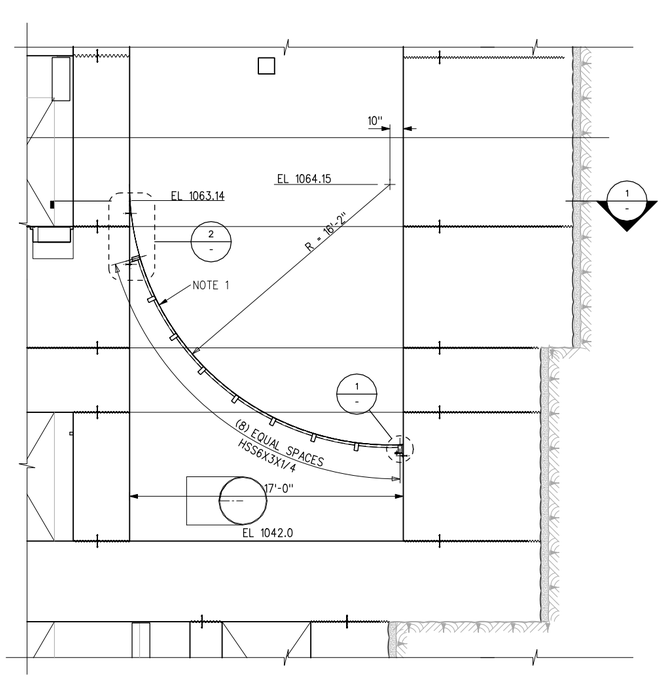

A FISH WELL SECTION (LOOKING DOWNSTREAM)
1/4"=1'-0"

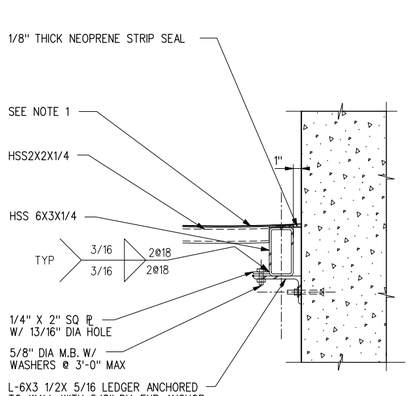

1 DETAIL
1 1/2"=1'-0"

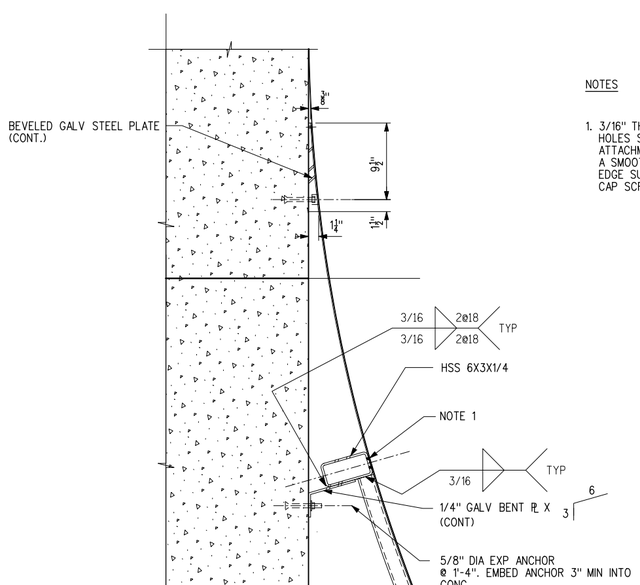

2 DETAIL
1 1/2"=1'-0"

NOTES

1. 3/16" THICK TYPE 304 STAINLESS PERFORATED PLATE WITH 3/32" DIA HOLES STAGGERED AT 5/32" WITH 1 1/8" MARGINS (MINIMUM) FOR ATTACHMENT TO EDGE SUPPORTS. PERFORATED PLATE SHALL HAVE A SMOOTH SURFACE. MARGINS OF PLATE SHALL BE FASTENED TO EDGE SUPPORTS WITH 3/8" DIA 18-8 STAINLESS FLAT HEAD SOCKET CAP SCREWS AT 6".

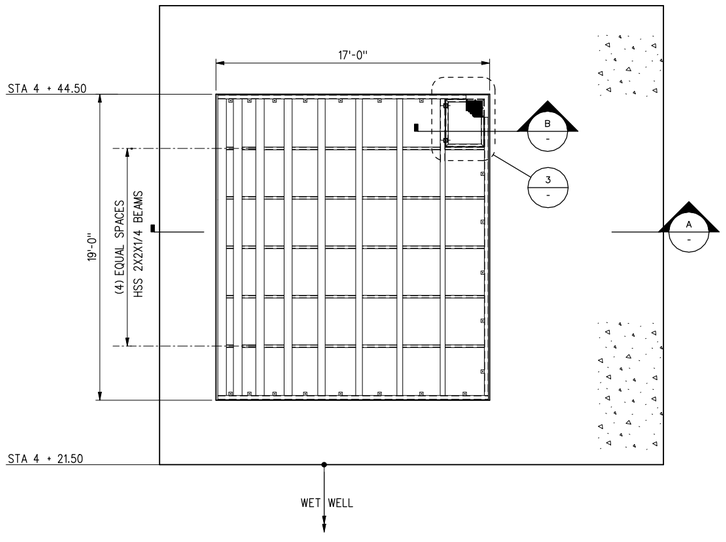

1 FISH SCREEN FRAMING PLAN
1/4"=1'-0"

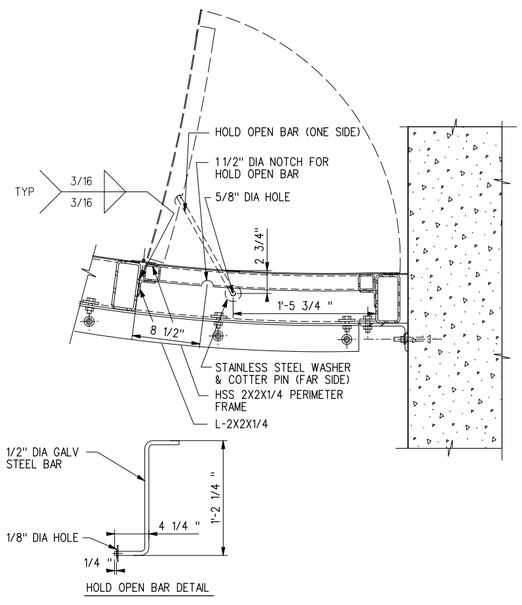

HOLD OPEN BAR DETAIL

B SECTION THRU ACCESS HATCH
1 1/2"=1'-0"

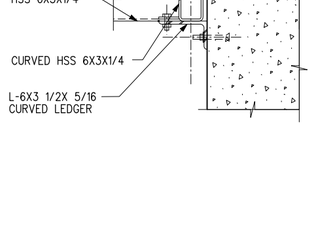

NOTE: SEE DETAIL 1 FOR ADDITIONAL INFO

C SECTION
1 1/2"=1'-0"

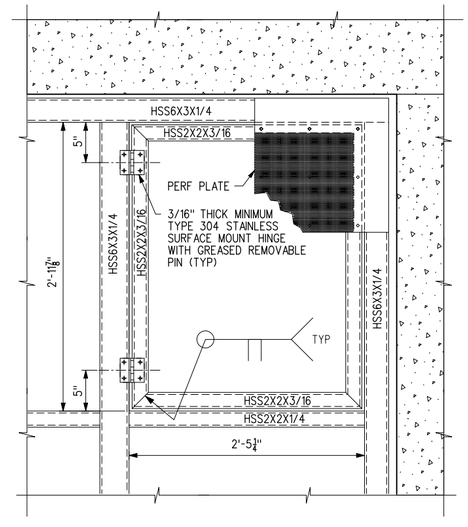

3 HATCH COVER
1 1/2"=1'-0"

US Army Corps of Engineers
Seattle District

Symbol	Description
Appr.	Symbol
Date	/ /
Description	

Designed by: BN
Drawn by:
Checked by:
Date: 16 MAR 06
File #: E-56-14-19
Rev.

U.S. ARMY ENGINEER DISTRICT SEATTLE
CORPS OF ENGINEERS
SEATTLE, WASHINGTON
Prepared by:

ADDITIONAL WATER STORAGE PROJECT
HOWARD HANSON DAM
GREEN RIVER WASHINGTON

FISH WELL DRAIN SCREEN FRAMING DETAILS

Plate number: S-207
Sheet of

F:\AECDesigns\HHAWS\Structural\HHAWS_1s-207.DGN
DESIGN FILE:
12:05:38 PM
DATE AND TIME PLOTTED: 8/6/2008

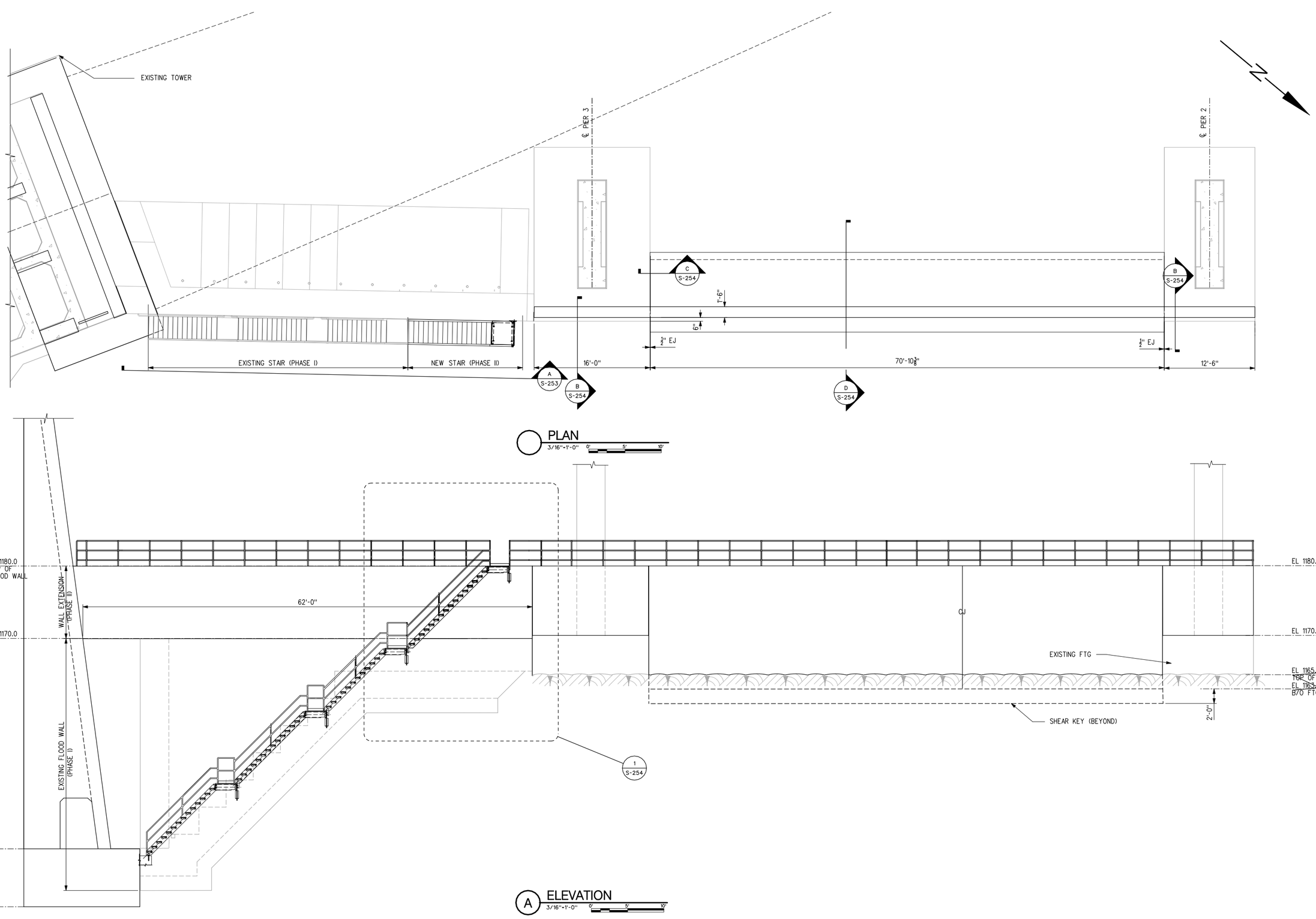

US Army Corps of Engineers
Seattle District

Symbol	Description
Appr.	
Date	

Designed by: X
Drawn by: X
Checked by: X

Date: 16 MAR 06
File # E-56-14-19
Rev.

U.S.ARMY ENGINEER DISTRICT,SEATTLE
CORPS OF ENGINEERS
SEATTLE,WASHINGTON
Prepared by:

ADDITIONAL WATER STORAGE PROJECT
HOWARD HANSON DAM

RETAINING FLOOD WALL ADDITION

GREEN RIVER WASHINGTON

Plate number:
S-253
Sheet of

DESIGN FILE: F:\AECDesigns\HHAW\Structural\HHAWS_1s-253.DGN
DATE AND TIME PLOTTED: 8/6/2008 12:05:51 PM

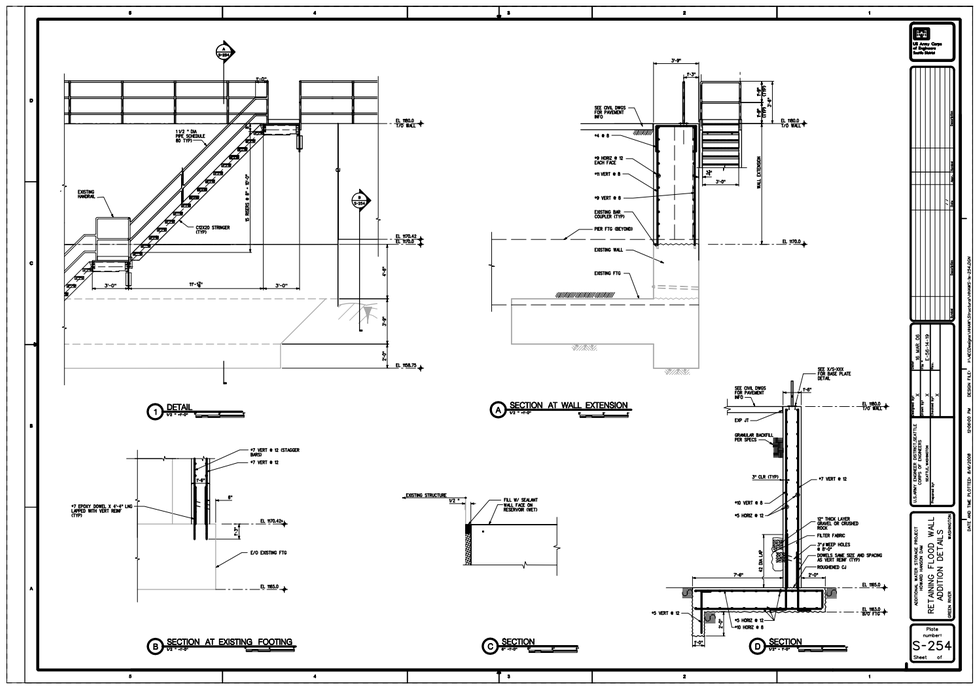

DETAIL
SECTION AT WALL EXTENSION
SECTION AT EXISTING FOOTING
SECTION
SECTION
RETAINING FLOOD WALL
ADDITION DETAILS
S-254

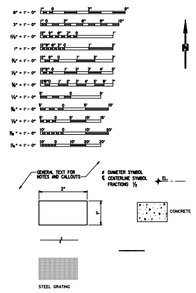

STEEL GRATING
CONCRETE

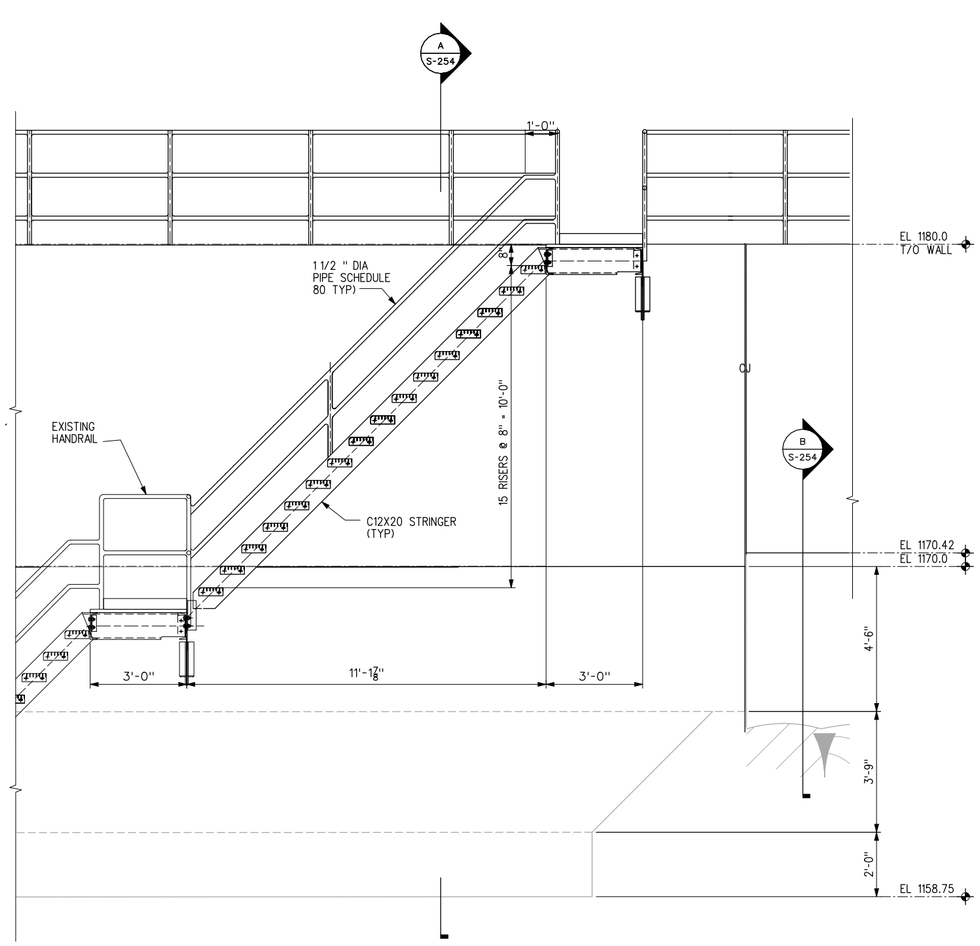

1 DETAIL
1/2 " =1'-0"

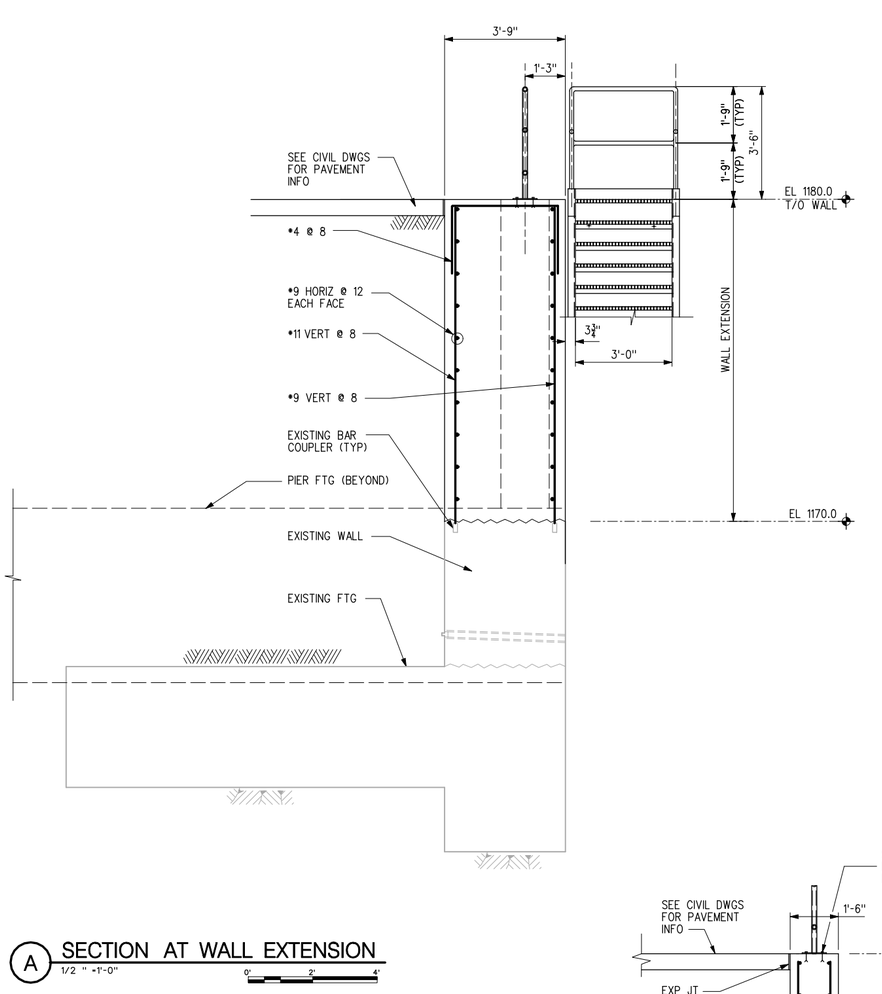

A SECTION AT WALL EXTENSION
1/2 " =1'-0"

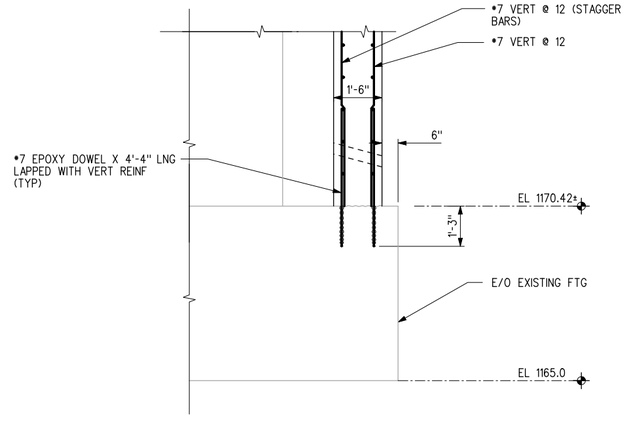

B SECTION AT EXISTING FOOTING
1/2 " =1'-0"

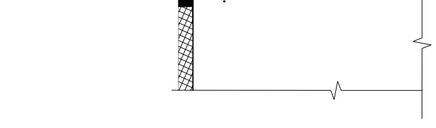

C SECTION
6" =1'-0"

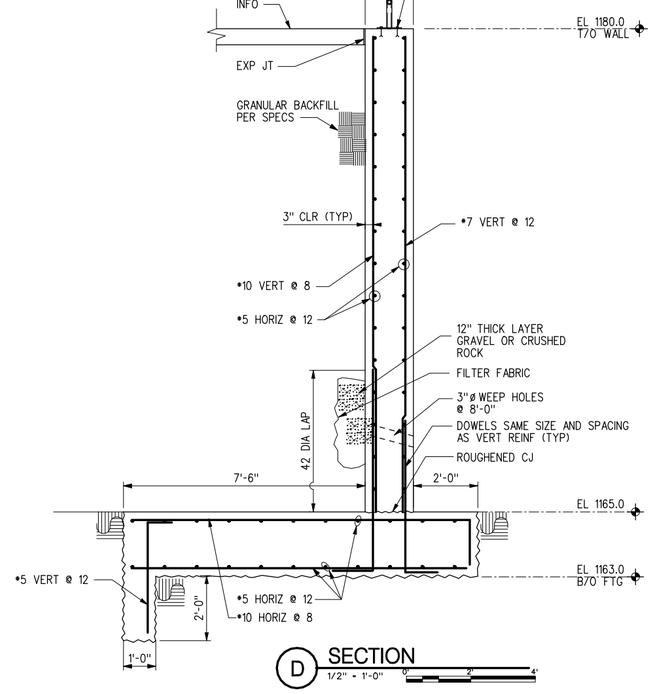

D SECTION
1/2" = 1'-0"

US Army Corps of Engineers
Seattle District

Symbol	Date	Appr.	Description
	/ /		

U.S.ARMY ENGINEER DISTRICT,SEATTLE
CORPS OF ENGINEERS
SEATTLE,WASHINGTON
Prepared by:

Designed by: X
Drawn by: X
Checked by: X
Date: 16 MAR 06
File # E-56-14-19
Rev.

ADDITIONAL WATER STORAGE PROJECT
HOWARD HANSON DAM
GREEN RIVER WASHINGTON

RETAINING FLOOD WALL ADDITION DETAILS

Plate number: S-254
Sheet of

DESIGN FILE: F:\AECDesigns\HHAW\Structural\HHAWS_1s-254.DGN
DATE AND TIME PLOTTED: 8/6/2008 12:06:01 PM

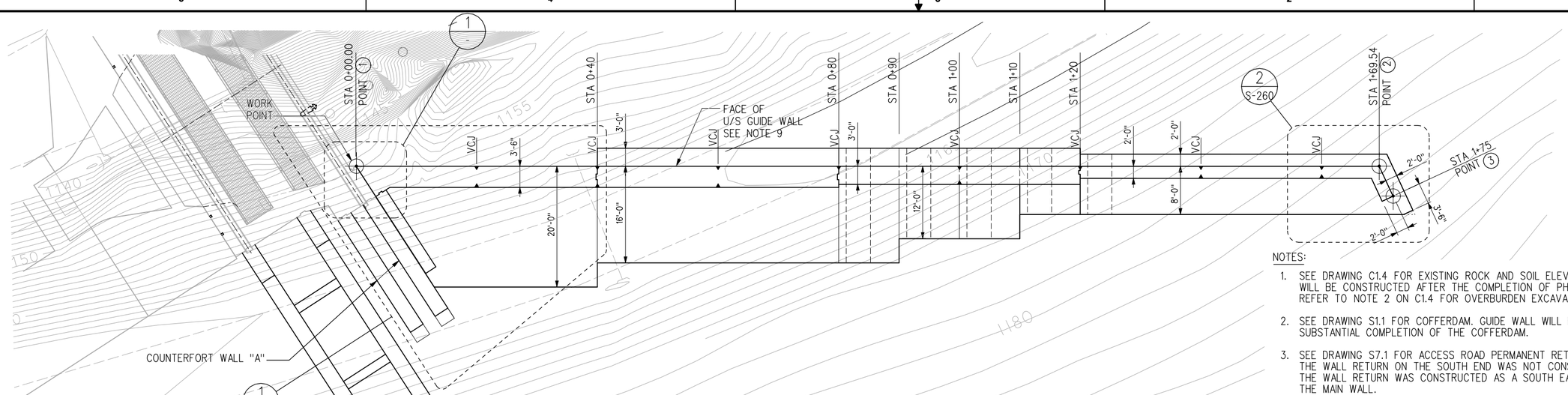

WALL ALIGNMENT			
POINT	NORTHING	EASTING	STATION
1	102,370.98	1,763,532.18	0+00.00
2	102,232.85	1,763,630.49	1+69.54
3	102,228.10	1,763,627.80	1+75.00

LEGEND:

TOF = TOP OF FOOTING

BOF = BOTTOM OF FOOTING

VCJ = VERTICAL CONTRACTION JOINT PER DETAIL 1 / S-261

NOTES:

1. SEE DRAWING C1.4 FOR EXISTING ROCK AND SOIL ELEVATIONS. GUIDE WALL WILL BE CONSTRUCTED AFTER THE COMPLETION OF PHASE 1B ROCK EXCAVATION. REFER TO NOTE 2 ON C1.4 FOR OVERBURDEN EXCAVATION.
2. SEE DRAWING S1.1 FOR COFFERDAM. GUIDE WALL WILL BE CONSTRUCTED AFTER SUBSTANTIAL COMPLETION OF THE COFFERDAM.
3. SEE DRAWING S7.1 FOR ACCESS ROAD PERMANENT RETAINING WALL. NOTE THAT THE WALL RETURN ON THE SOUTH END WAS NOT CONSTRUCTED AS DESIGNED. THE WALL RETURN WAS CONSTRUCTED AS A SOUTH EASTERLY EXTENSION OF THE MAIN WALL.
4. SEE DRAWINGS C2.1 AND C2.5 FOR THE LOCATION AND CONFIGURATION OF THE TEMPORARY ECOLOGY BLOCK RETAINING WALL. THE LOCATION OF THE ECOLOGY BLOCK WALL IS SHOWN AS MODIFIED BY RFIC0084.
5. THE SHOTCRETE/SOIL ANCHOR WALL TO THE SOUTHEAST OF THE ACCESS ROAD PERMANENT RETAINING WALL WAS FIELD LOCATED DURING CONSTRUCTION. THE LOCATION SHOWN ON THIS DRAWING IS BASED ON PHOTOGRAPHS OF THE CONSTRUCTION.
6. SEE DRAWING GT2.2 FOR BORING LOCATIONS.
7. PROVIDE 4" ø WALL WEEP HOLES W/ CLEANOUT PLUG ON INSIDE FACE @ 10'-0" HORIZONTAL SPACING AND 1'-0" ABOVE TOP OF FINISHED GRADE AT FACE OF WALL.
8. GUIDE WALL DESIGNED FOR A 90-TON RT CRANE ON OPERATING DECK (EL 1181.00).
9. THE BASELINE FOR THE WALL IS AT THE OUTSIDE FACE OF THE U/S GUIDEWALL.

A GUIDE WALL PLAN
1/8"=1'-0" 0' 8' 16'

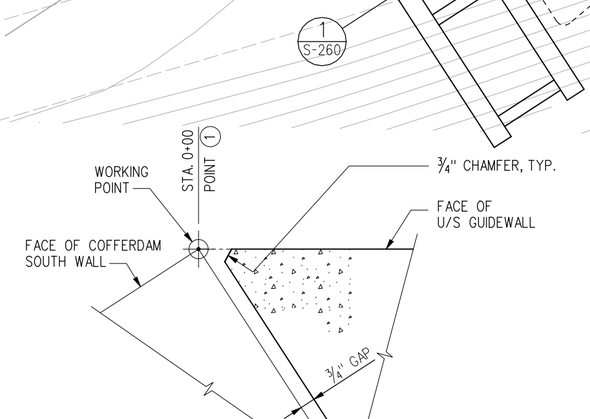

1 WORKPOINT DETAIL
3"=1'-0" 0" 4" 8"

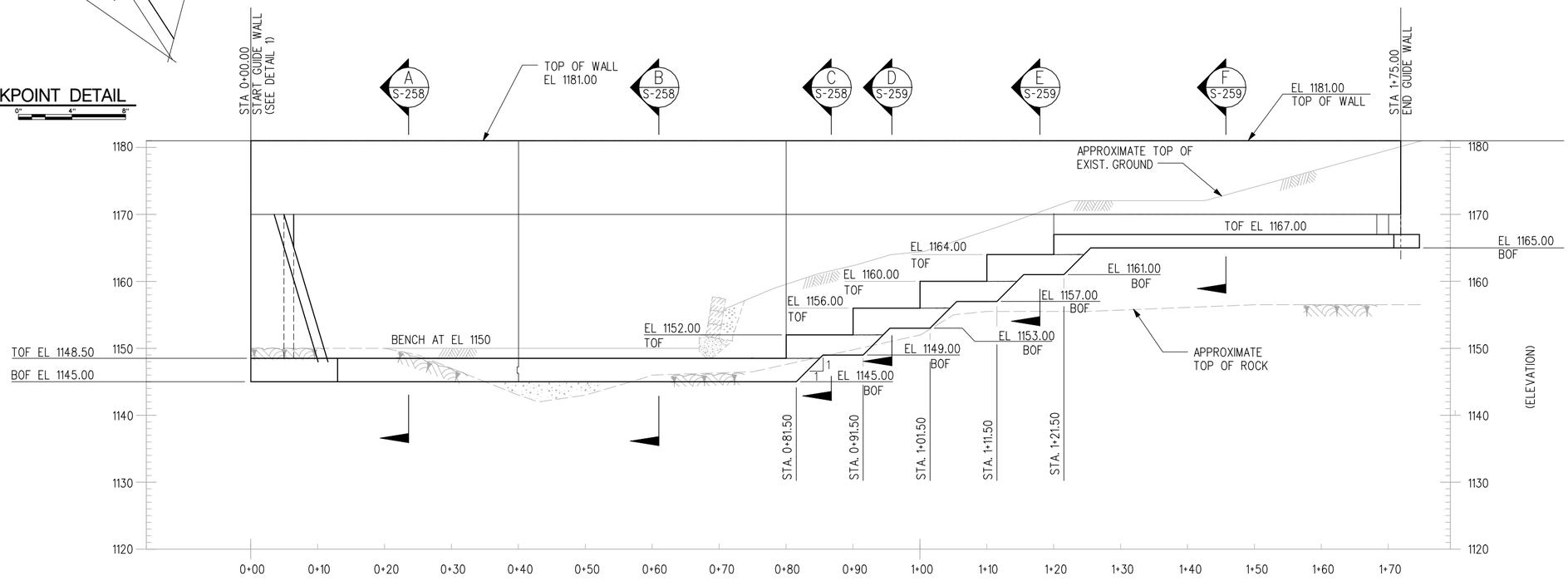

ELEVATION
1/8"=1'-0" 0' 8' 16'

US Army Corps of Engineers
Seattle District

Symbol	Description
Appr.	
/ / Date	

Designed by: X	Date: 16 MAR 06
Drawn by: X	File # E-56-14-19
Checked by: X	Rev.

U.S.ARMY ENGINEER DISTRICT,SEATTLE
CORPS OF ENGINEERS
SEATTLE, WASHINGTON
Prepared by:

ADDITIONAL WATER STORAGE PROJECT
HOWARD HANSON DAM
GREEN RIVER WASHINGTON

GUIDE WALL PLAN AND PROFILE

Plate number: S-255
Sheet of

DESIGN FILE: P:\AECDesigns\HHAW\Structural\HHAWS_1s-255.DGN
DATE AND TIME PLOTTED: 8/6/2008 12:06:07 PM

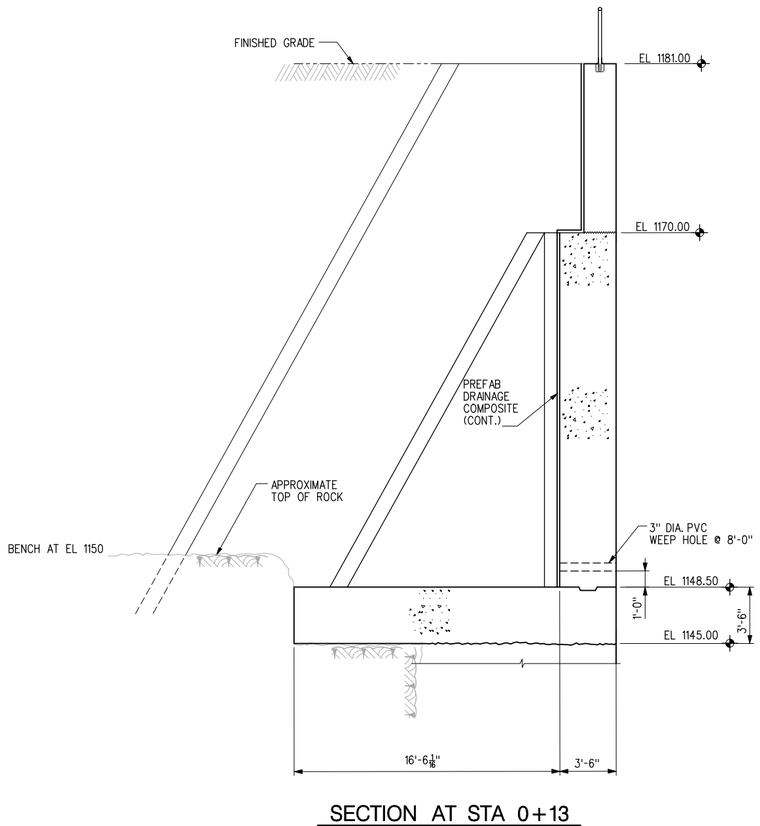

SECTION AT STA 0+13

1/4"-1'-0"

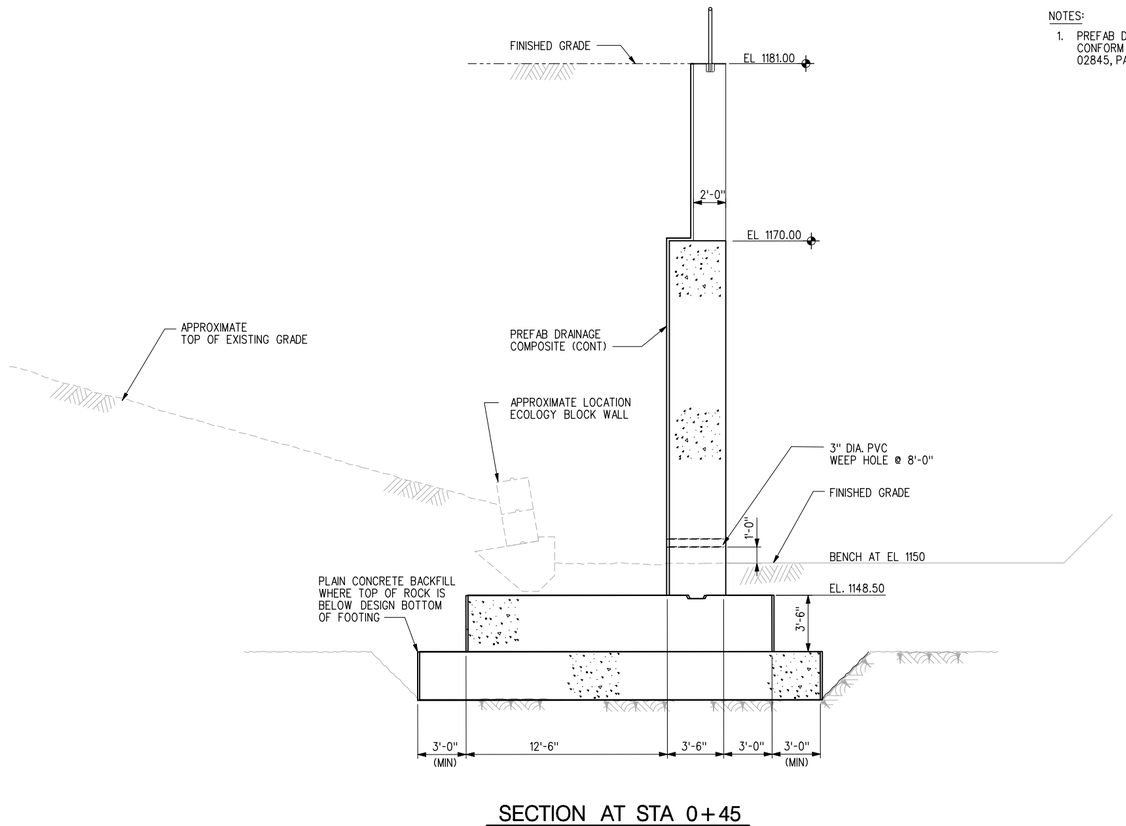

SECTION AT STA 0+45

1/4"-1'-0"

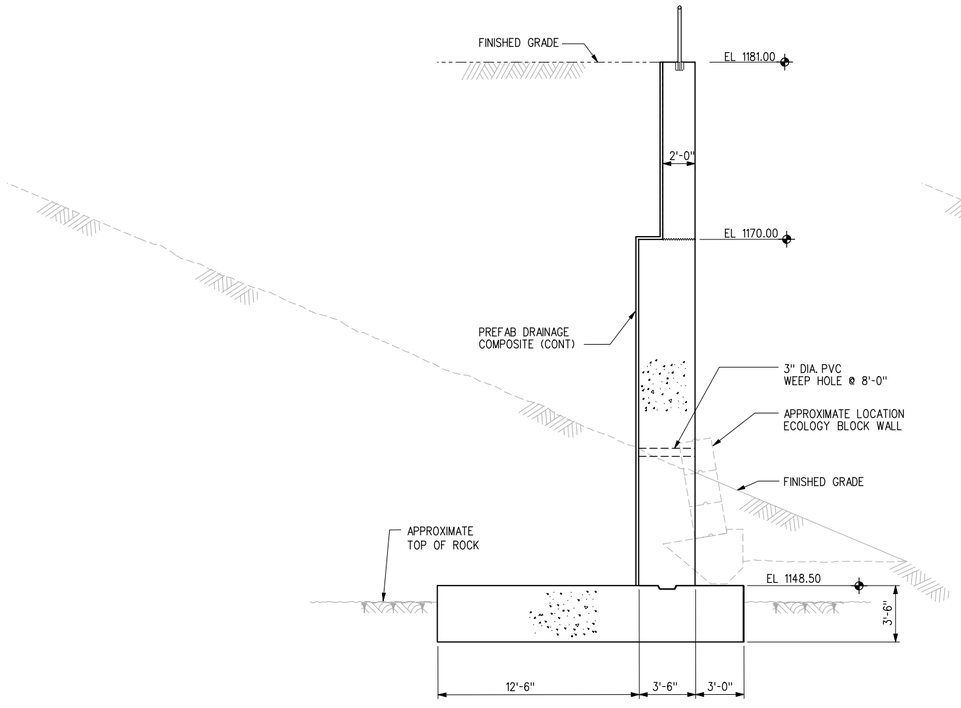

SECTION AT STA 0+70

1/4"-1'-0"

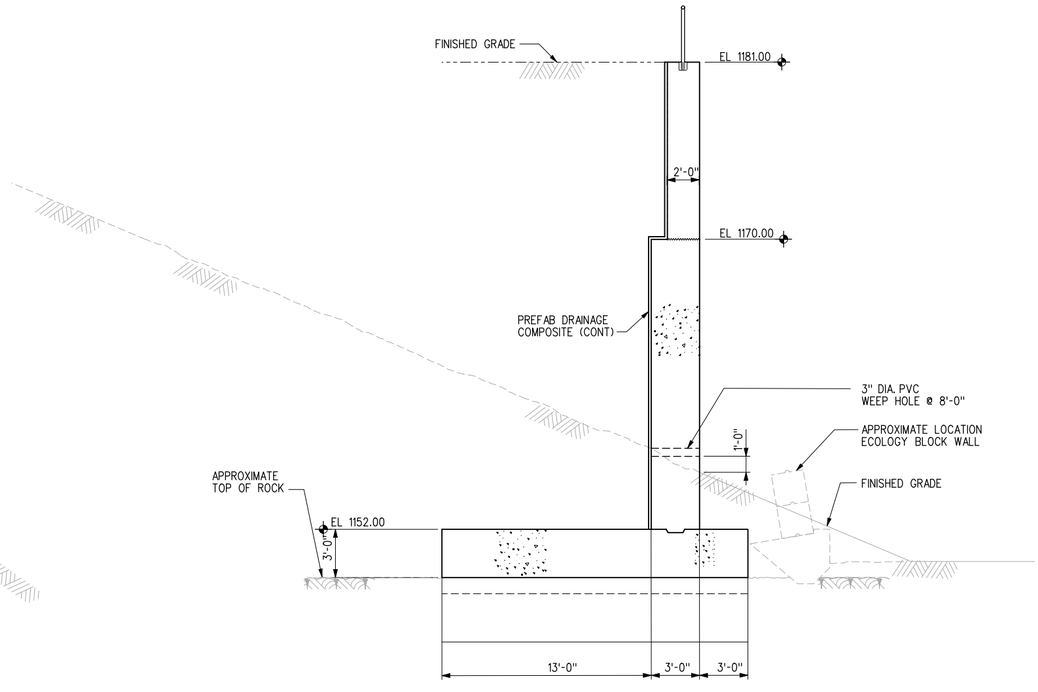

SECTION AT STA 0+86

1/4"-1'-0"

NOTES:

1. PREFAB DRAINAGE COMPOSITE SHALL CONFORM TO SPECIFICATION SECTION 02845, PARAGRAPHS 2.2 "GEOCOMPOSITE."

US Army Corps of Engineers
Seattle District

Symbol	Description	Appr.	Date
			/ /

Designed by:	Date: 16 MAR 06
Drawn by:	File # E-56-14-19
Checked by:	Rev.
Prepared by:	

U.S.ARMY ENGINEER DISTRICT,SEATTLE
CORPS OF ENGINEERS
SEATTLE,WASHINGTON

ADDITIONAL WATER STORAGE PROJECT
HOWARD HANSON DAM

GUIDE WALL SECTIONS 1

GREEN RIVER WASHINGTON

Plate number: S-256

Sheet of

F:\AECDesigns\HHAW\Structural\HHAWS_1s-256.DGN
DESIGN FILE:
12:06:15 PM
DATE AND TIME PLOTTED: 8/6/2008

NOTES:

1. SEE NOTES ON DWG. S-255

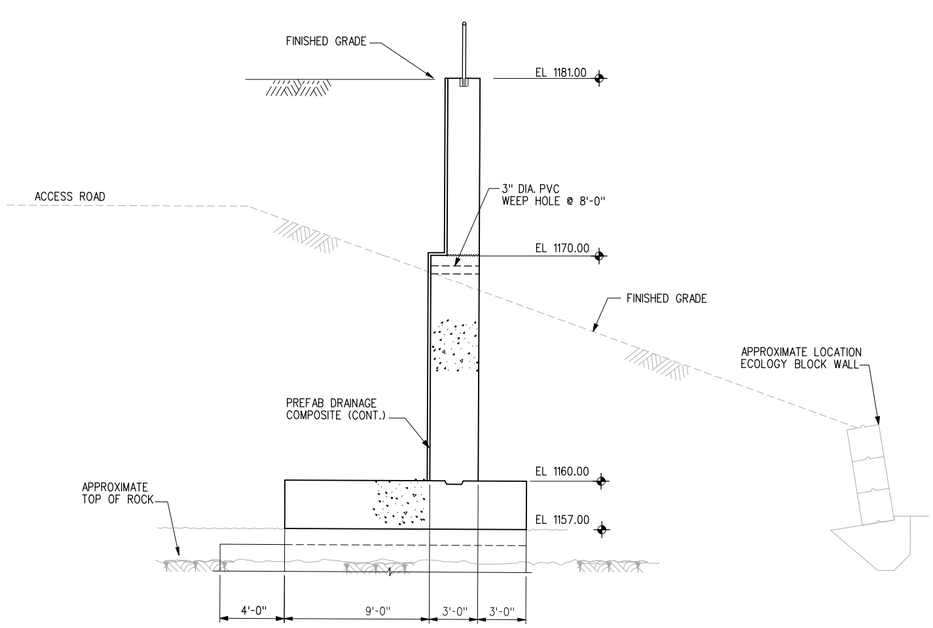

SECTION AT STA 1+06

1/4"=1'-0"

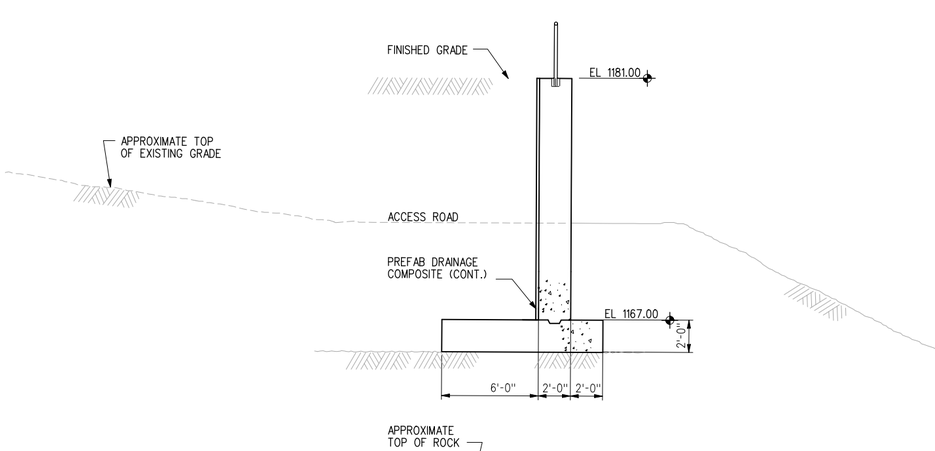

SECTION AT STA 1+06

1/4"=1'-0"

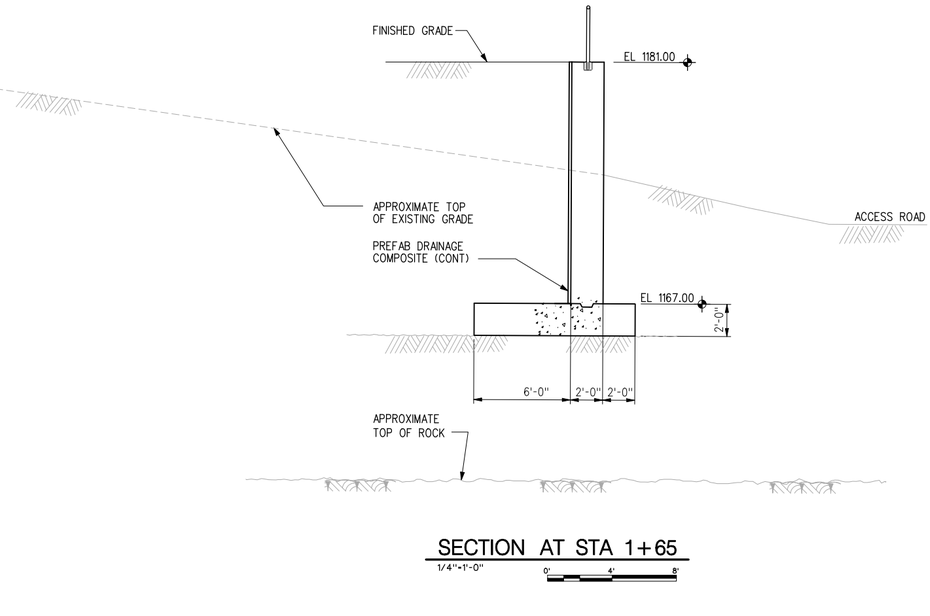

SECTION AT STA 1+65

1/4"=1'-0"

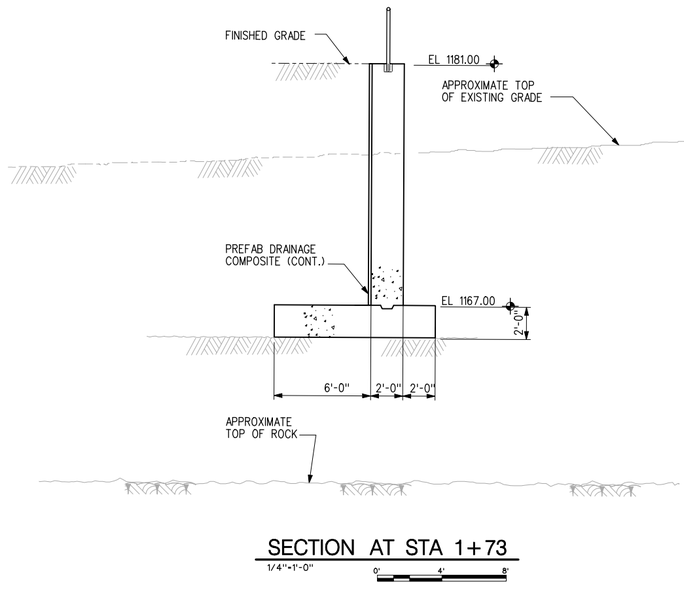

SECTION AT STA 1+73

1/4"=1'-0"

US Army Corps of Engineers
Seattle District

Symbol	Description	Appr.	Symbol	Date	Description
				/ /	

U.S.ARMY ENGINEER DISTRICT,SEATTLE
CORPS OF ENGINEERS
SEATTLE, WASHINGTON

Prepared by:

Designed by: X
Drawn by: X
Checked by: X

Date: 16 MAR 06
File *: E-56-14-19
Rev.

ADDITIONAL WATER STORAGE PROJECT
HOWARD HANSON DAM

GUIDE WALL SECTIONS II

GREEN RIVER WASHINGTON

Plate number:
S-257
Sheet of

DATE AND TIME PLOTTED: 8/6/2008 12:06:28 PM
DESIGN FILE: P:\ACCDesigns\HHAW\Structural\HHAWS_1s-257.DGN

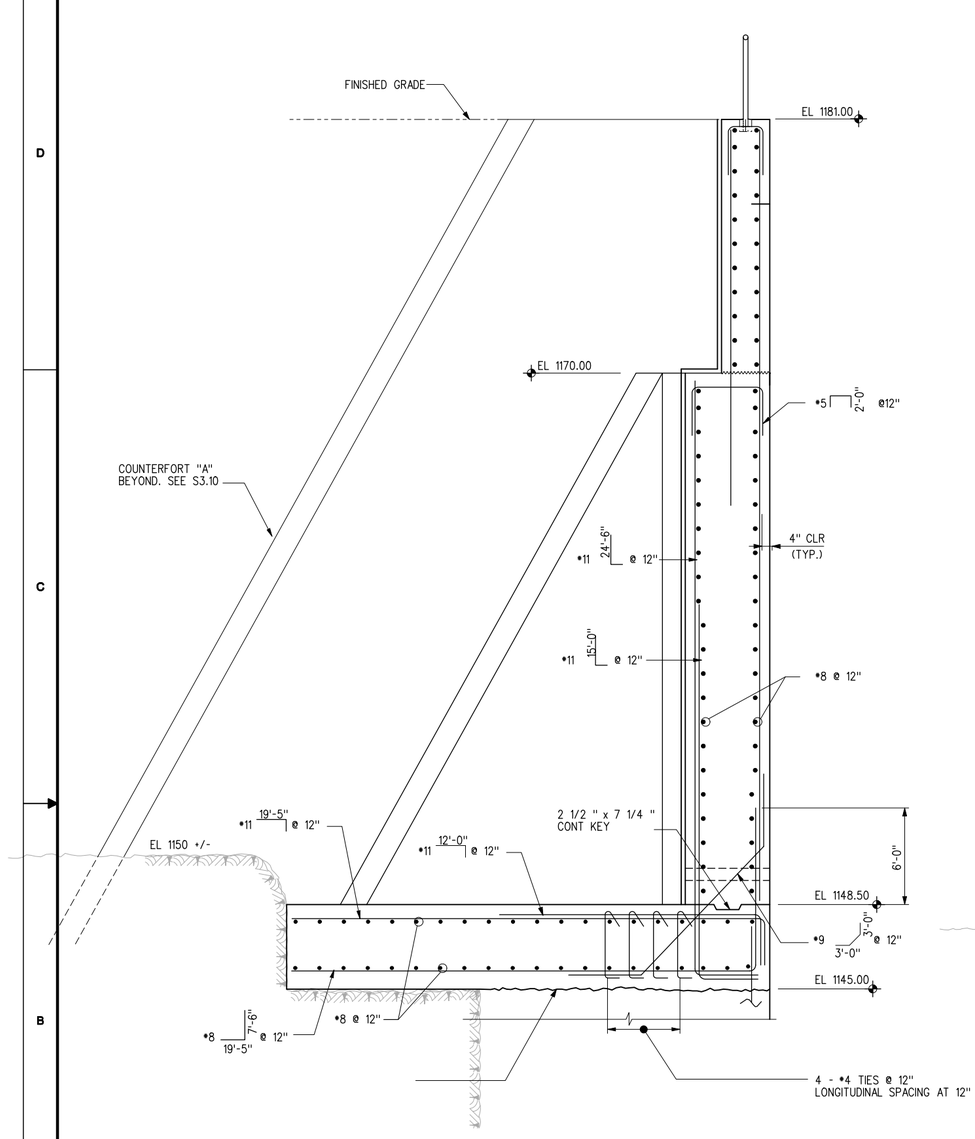

STA. 0+00 TO STA. 0+40

A S-255 / A S-260 SECTION 1/4"=1'-0"

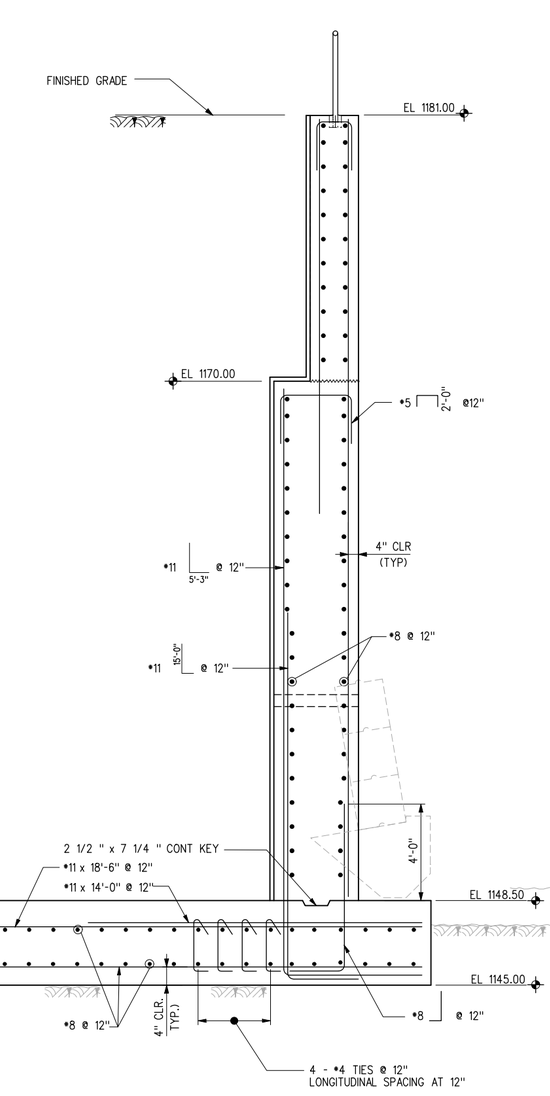

STA. 0+40 TO STA. 0+80

B S-255 SECTION 1/4"=1'-0"

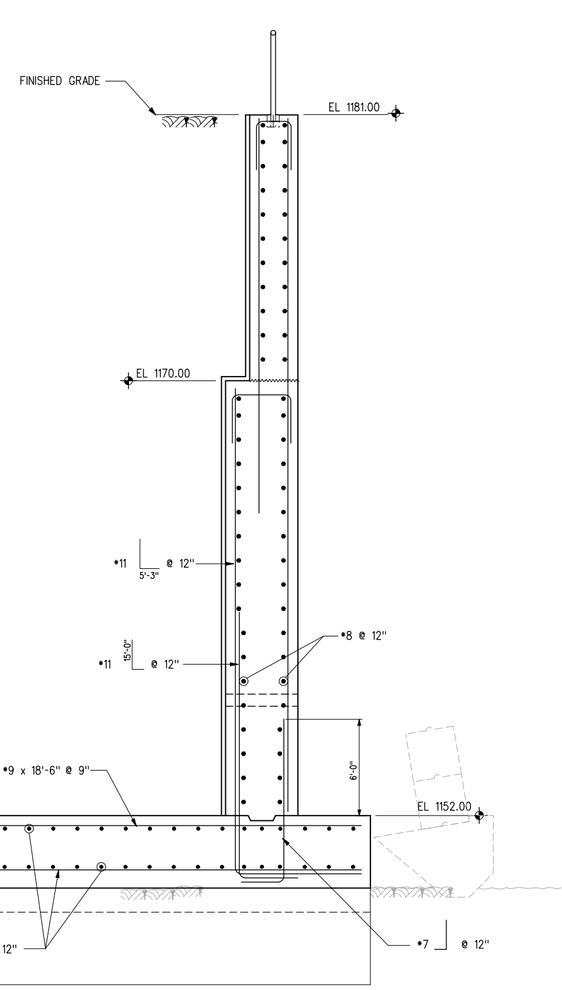

STA. 0+80 TO STA. 0+90

C S-255 SECTION 1/4"=1'-0"

NOTES:

1. SEE SECTION B S-255 FOR REMAINING DETAILS OF SECTIONS C S-255 TO F S-255
2. UNLESS OTHERWISE NOTED, ALL HOOKS SHALL BE ACI STANDARD 90° HOOKS.

US Army Corps of Engineers
Seattle District

Symbol	Description
Appr.	
/ / Date	

Designed by: X
Drawn by: X
Checked by: X
Date: 16 MAR 06
File # E-56-14-19
Rev.

U.S. ARMY ENGINEER DISTRICT, SEATTLE
CORPS OF ENGINEERS
SEATTLE, WASHINGTON
Prepared by:

ADDITIONAL WATER STORAGE PROJECT
HOWARD HANSON DAM
GUIDE WALL
REINFORCEMENT 1
GREEN RIVER WASHINGTON

Plate number: S-258
Sheet of

DESIGN FILE: P:\AECDesigns\HHAW\Structural\HHAWS-1s-258.DGN
DATE AND TIME PLOTTED: 8/6/2008 12:06:36 PM

NOTES:

1. SEE SECTION B S-255 FOR REMAINING DETAILS OF SECTIONS C S-255 TO F S-255
2. UNLESS OTHERWISE NOTED, ALL HOOKS SHALL BE ACI STANDARD 90° HOOKS.

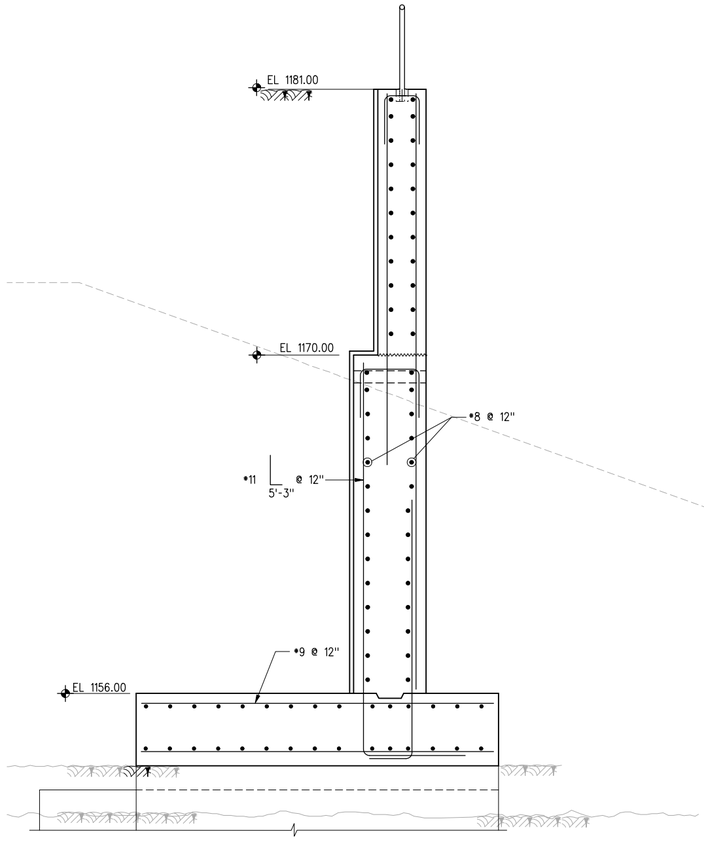

STA. 0+90 TO STA. 1+10

STA. 0+90 TO 1+00 AS SHOWN
STA. 1+00 TO 1+10 SIMILAR

D SECTION
1/4"=1'-0" 0' 4' 8'

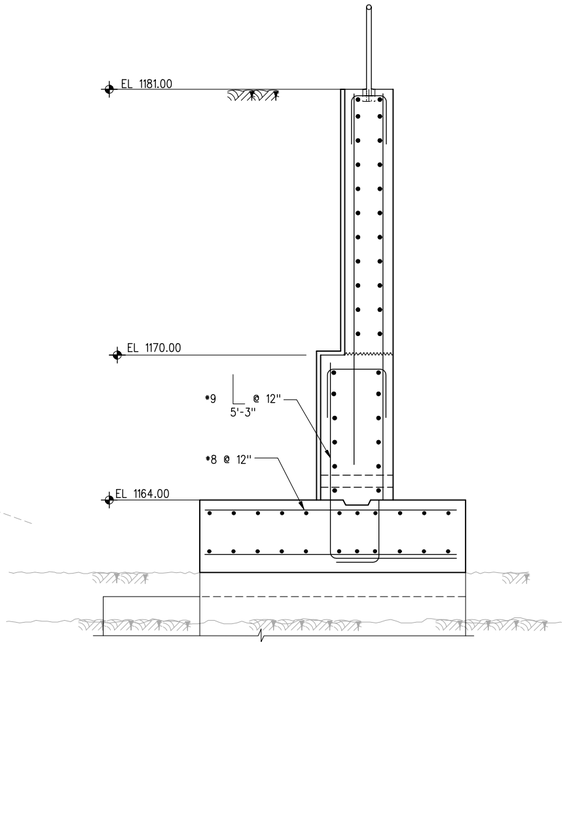

STA. 1+10 TO STA. 1+20

E SECTION
1/4"=1'-0" 0' 4' 8'

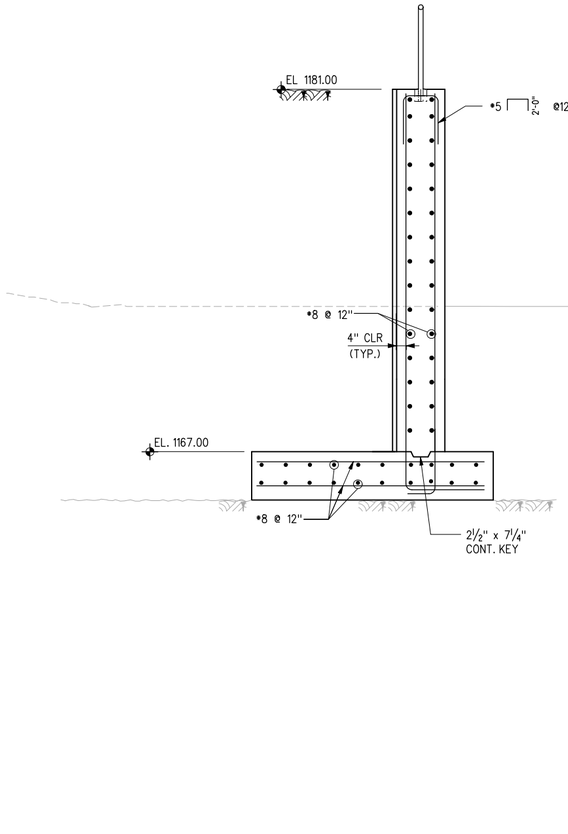

STA. 1+20 TO STA. 1+75

F SECTION
1/4"=1'-0" 0' 4' 8'

US Army Corps of Engineers
Seattle District

Symbol	Description	Appr.	Date
			/ /

Designed by: X	Date: 16 MAR 06
Drawn by: X	File # E-56-14-19
Checked by: X	Rev.

U.S.ARMY ENGINEER DISTRICT,SEATTLE
CORPS OF ENGINEERS
SEATTLE, WASHINGTON
Prepared by:

ADDITIONAL WATER STORAGE PROJECT
HOWARD HANSON DAM
GUIDE WALL
REINFORCEMENT II
GREEN RIVER WASHINGTON

Plate number:
S-259
Sheet of

FILE: I:\AEC\Designs\HHAW\Structural\HHAWS-1s-259.DGN
DESIGN FILE:
DATE AND TIME PLOTTED: 8/6/2008 12:06:50 PM

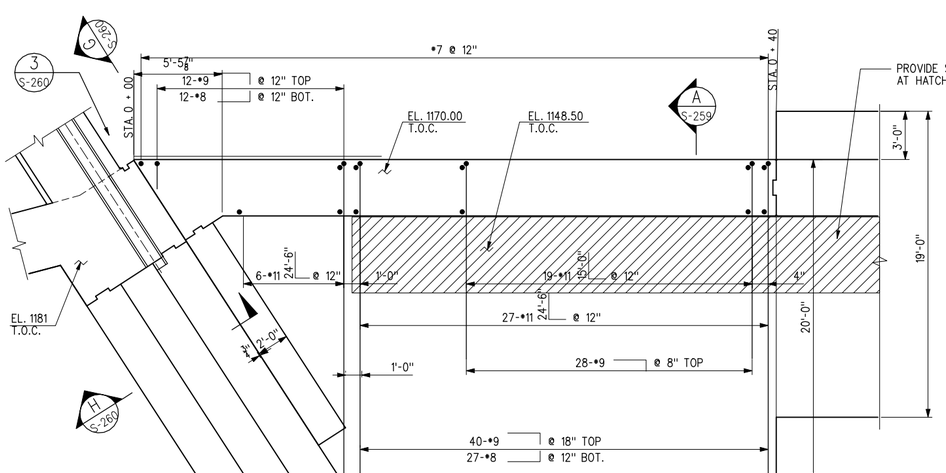

1 S-255 PLAN 1/4"=1'-0"

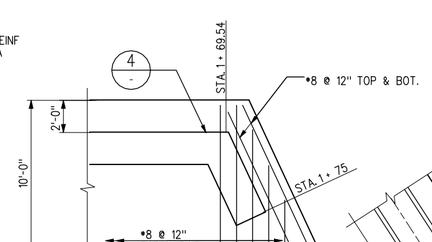

2 S-255 PLAN 1/4"=1'-0"

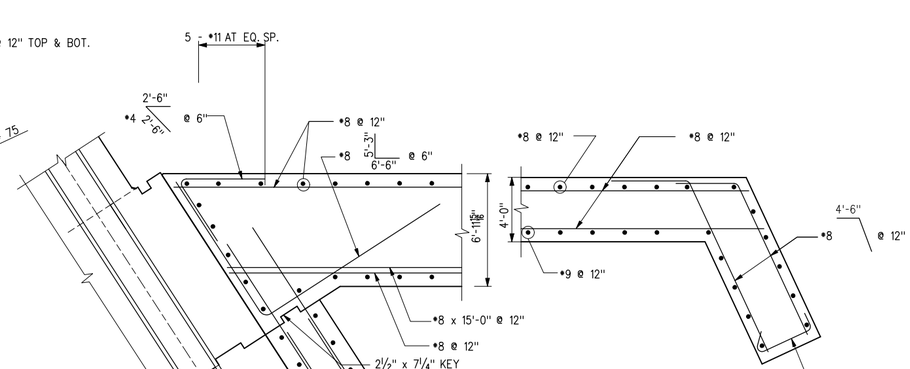

3 S-260 DETAIL 1/2"=1'-0"

4 S-260 DETAIL 1/2"=1'-0"

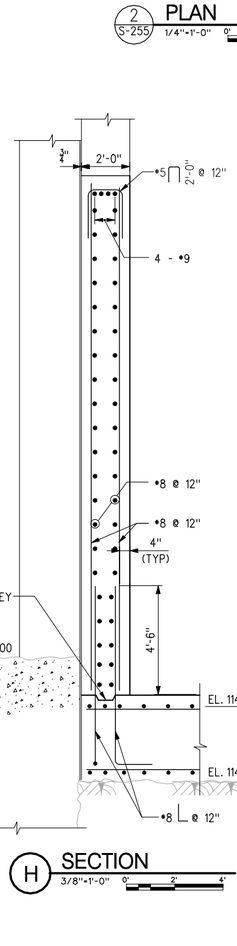

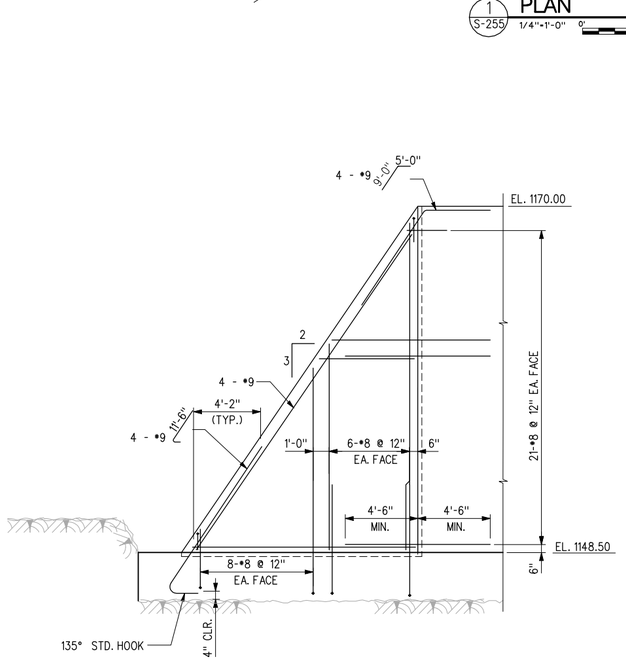

G S-260 SECTION 1/4"=1'-0"

H SECTION 3/8"=1'-0"

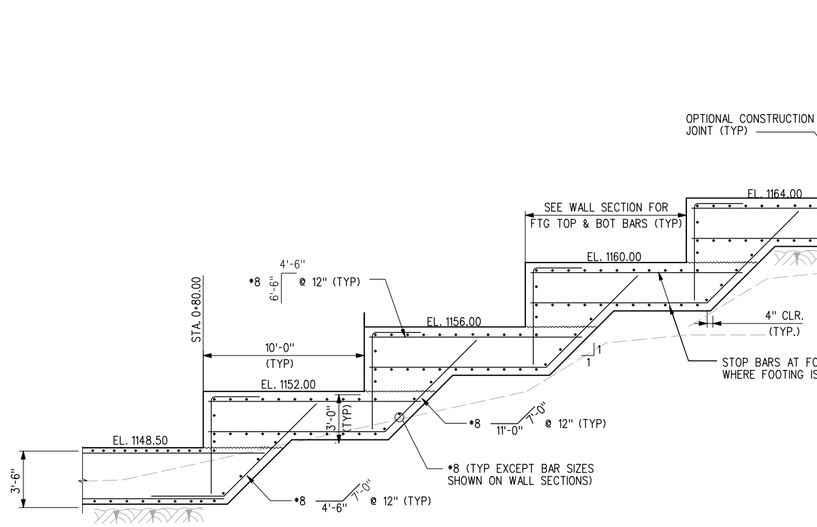

5 STEPPED FOOTING ELEVATION 1/4"=1'-0"

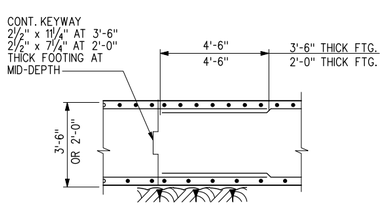

JOINT AT FLAT FOOTING

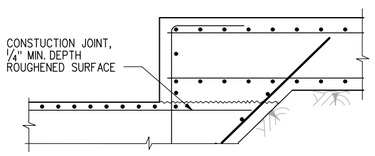

JOINT AT STEPPED FOOTING

6 TYPICAL FOOTING CONSTRUCTION JOINTS DETAILS 3/8"=1'-0"

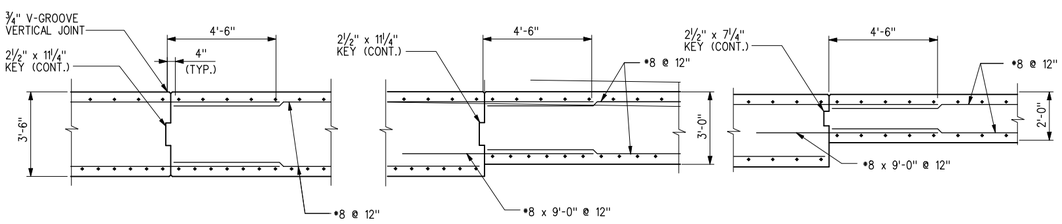

7 TYPICAL WAL STEM CONSTRUCTION JOINTS DETAILS 3/8"=1'-0"

US Army Corps of Engineers
Seattle District

No.	Description	Appr.	Symbol	Date
1				/ /

Designed by:	Date: 16 MAR 06
Drawn by:	File #: E-56-14-19
Checked by:	Rev.
Prepared by:	

U.S. ARMY ENGINEER DISTRICT, SEATTLE
CORPS OF ENGINEERS
SEATTLE, WASHINGTON

ADDITIONAL WATER STORAGE PROJECT
HOWARD HANSON DAM
GUIDE WALL
SECTIONS AND DETAILS
GREEN RIVER WASHINGTON

Plate number: S-260
Sheet of

DATE AND TIME PLOTTED: 8/6/2008 12:06:58 PM
DESIGN FILE: I:\AEC\Designs\HHAW\Structural\HHAWS-1s-260.DGN

NOTES:

1. THE BENTONITE WATERSTOP SHALL BE VOLCLAY WATERSTOP-RX-101 OR APPROVED ALTERNATE.
2. THE INSTALLATION OF BENTONITE WATERSTOP SHALL FOLLOW MANUFACTURER'S PROCEDURES.

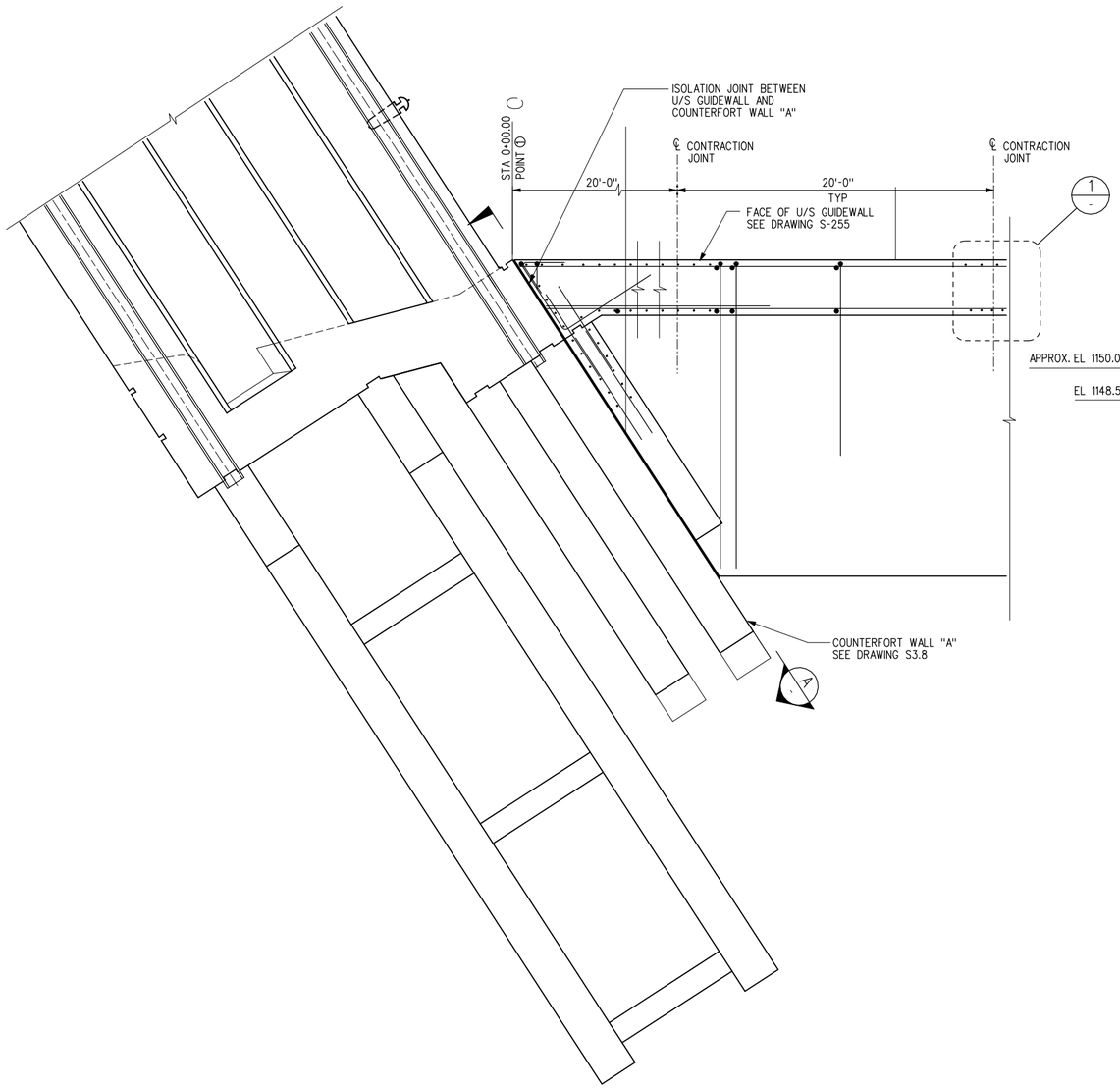

JOINT LAYOUT PLAN
1/4"=1'-0"

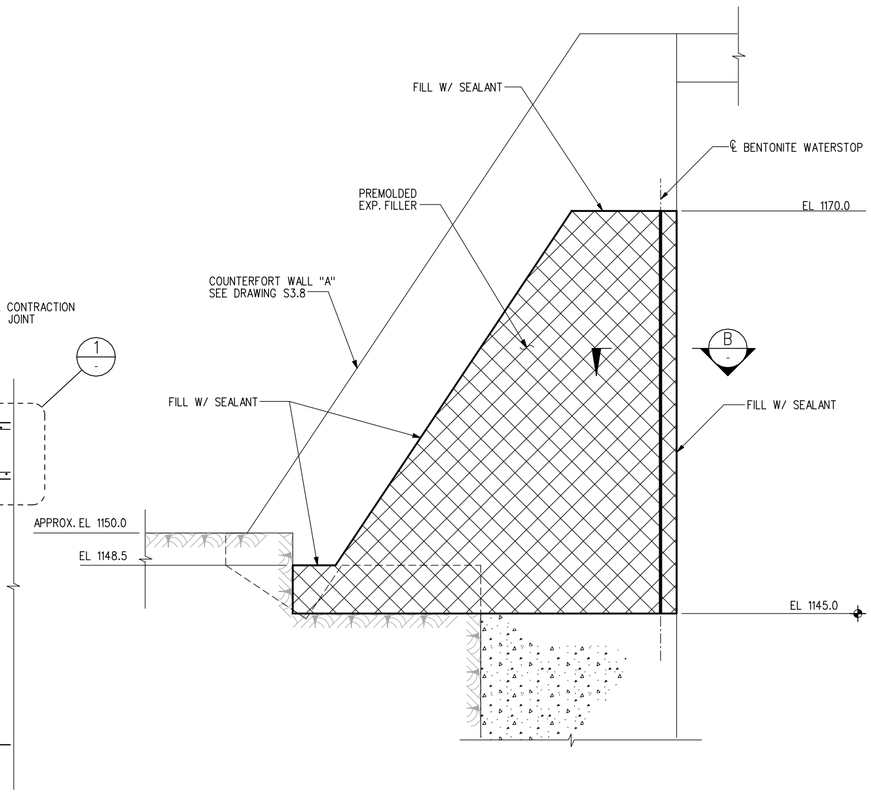

A SECTION
1/4"=1'-0"

NOTE: SEE S9.1 FOR U/S GUIDEWALL GEOMETRY

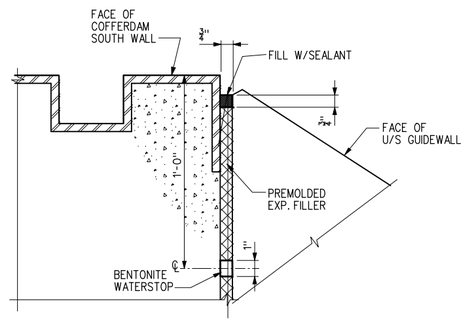

B SECTION
3"=1'-0"

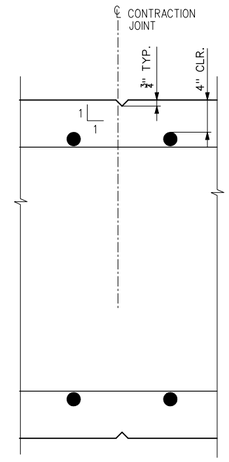

1 VERT. CONTRACTION JOINT DETAIL
11/2"=1'-0"

US Army Corps of Engineers
Seattle District

Symbol	Description	Appr.	Date
			/ /

Designed by:	X
Drawn by:	X
Checked by:	X

Date: 16 MAR 06
File #
E-56-14-19
Rev.

U.S.ARMY ENGINEER DISTRICT,SEATTLE
CORPS OF ENGINEERS
SEATTLE, WASHINGTON
Prepared by:

ADDITIONAL WATER STORAGE PROJECT
HOWARD HANSON DAM
GREEN RIVER WASHINGTON

GUIDE WALL JOINT DETAILS

Plate number:
S-261
Sheet of

FILE: I:\AECDesigns\HHAW\Structural\HHAWS-1s-261.DGN
DESIGN FILE:
DATE AND TIME PLOTTED: 8/6/2008 12:07:12 PM

ABBREVIATIONS

AB.	ABOVE/ANCHOR BOLT
A.F.F	ABOVE FINISHED FLOOR
ACC.	ACCESSIBLE
ACOUST.	ACOUSTICAL
ACT.	ACOUSTICAL TILE
AIB	AIR INFILTRATION BARRIER
ALUM.	ALUMINUM
A/M	AIR/MOISTURE
ARCH.	ARCHITECT (URAL)
BET.	BETWEEN
BLKG.	BLOCKING
BD.	BOARD
BOT.	BOTTOM
BLDG.	BUILDING
BRKT.	BRACKET
BSMT.	BASEMENT
BUR	BUILT UP ROOF
CBU	CEMENT BACKER UNIT
CG	CORNER GUARD
CPT.	CARPET (ED)
C.I.	CAST IRON
C.I.P.	CAST IN PLACE
CLG.	CEILING
CL	CLOSET
CT	CERAMIC TILE
CMT	CERAMIC MOSAIC TILE
CTR	CENTER
CLR.	CLEAR (ANCE)
COL.	COLUMN
COMP	COMPENSATION
CONC.	CONCRETE
CORR.	CORRIDOR
C.M.U.	CONCRETE MASONRY UNIT
CONT.	CONTINUOUS OR CONTINUE
C.P.C.	CAST-IN-PLACE CONC.
C.P.T.	CARPET
C.Q.	CHIEF OF QUARTERS
C.W.	COMMERCIAL WASHER
D.	DRYER (CLOTHES/DUPLEX)
DET.	DETAIL
DIA.	DIAMETER
DIM.	DIMENSION
DR.	DOOR
DBL	DOUBLE
DN.	DOWN
DS.	DOWNSPOUT
DWG.	DRAWING
D.F.	DRINKING FOUNTAIN
EA.	EACH
E.S.	EACH SIDE
ELEC.	ELECTRIC (AL)
EL.	ELEVATION
EQ.	EQUAL
EQUIP.	EQUIPMENT
EXIST.	EXISTING
EPT	EXTERIOR PAINT
EXP.	EXPOSED
EXT.	EXTERIOR
EPS	EXPANDED POLYSTYRENE
E.J., OR EXP.JT.	EXPANSION JOINT
EIFS	EXTERIOR INSULATION AND FINISH SYSTEM
EWC	ELECTRIC WATER COOLER
F.B.M.	FACE BRICK MODULAR
F.O.B.	FACE OF BRICK
F.O.C.	FACE OF CONCRETE
F.O.E.	FACE OF E.I.F.S.
F.O.S.	FACE OF STUD FRAMING
F.R.P.	FIBER REINFORCED PLASTIC
F.R.T.	FIRE RETARDANT TREATED
FED STD	FEDERAL STANDARD
F.F.	FINISH FLOOR
FIN.	FINISH (ED)
F.G.	FINISH GRADE
F.E.	FIRE EXTINGUISHER
FLR.	FLOOR (ING)
F.D.	FLOOR DRAIN
GA.	GAGE, GAUGE
GALV.	GALVANIZED
GB	GRAB BAR
GL	GRID LINE
GWB	GYPSUM WALL BOARD
HW, HDWR	HARDWARE
HELV MED	HELVETICA MEDIUM
HELV REG	HELVETICA REGULAR
HT.	HEIGHT
H.M.	HOLLOW METAL
HORIZ.	HORIZONTAL
HYD	HYDRAULIC
INSUL.	INSULATION
ILO	IN LIEU OF
J.	JANITOR
JT.	JOINT
KIT.	KITCHEN
LLH	LONG LEG HORIZONTAL
LLV	LONG LEG VERTICAL
LV	LAVATORY
MAT.	MATERIAL (S)
MAX.	MAXIMUM
MECH.	MECHANIC (AL)
MET.	METAL
MFR.	MANUFACTURER
MG	MIRROR GLAZING
MIN.	MINIMUM
MISC.	MISCELLANEOUS
M.R.	MOISTURE RESISTANT
MB	MOISTURE BARRIER
MO	MASONRY OPENING
NO.	NUMBER
N.I.C.	NOT IN CONTRACT
N.T.S.	NOT TO SCALE
O.A.	OVER ALL
O.C.	ON CENTER (S)
OH	OPPOSITE HAND
OPEN'G	OPENING
OPP.	OPPOSITE
OSB	ORIENTED STRAND BOARD
P & S	POLE AND SHELF
PLYWD.	PLYWOOD
P. LAM.	PLASTIC LAMINATE
PR	PAIR
PTD/WR	PAPER TOWEL DISPENSER & WASTE RECEPTACLE
PT.	PAINT
RCM	RECOMMENDATIONS
RCP	REFLECTED CEILING PLAN
REC	RECESSED
REF.	REFERENCE
REFER.	REFRIGERATOR
REQ'D	REQUIRED
R.B.	RESILIENT BASE
RES.	RESILIENT
REV.	REVISION (S), REVISED
R.	RISER
RO	ROUGH OPENING
R.D.	ROOF DRAIN
RM.	ROOM
SB	PRECAST CONC. SPLASHBLOCK
SCD	SEAT COVER DISPENSER
SCR	SHOWER CURTAIN ROD
SCWD	SOLID CORE WOOD
SD	SOAP DISPENSER
SGR	SOAP/GRAB BAR COMBO
SH	SOAP HOLDER
SIM.	SIMILIAR
SIS	SUSTAINABILITY INFO SIGN
SL	SHAFT LID
S.F.	SQUARE FEET
SMHD	SHELF METAL HEAVY DUTY
SND	SANITARY NAPKIN DISPOSER
SNTD	SANITARY NAPKIN AND TAMPON DISPENSER
SPEC.	SPECIFICATION (S)
SQ.	SQUARE
SS	STAINLESS STEEL
STD WT	STANDARD WEIGHT
ST.	STEEL
STR	STAIR
STOR.	STORAGE
STRUCT.	STRUCTURAL
SUSP.	SUSPENDED
SIS	SUSTAINABILITY INFO SIGN
T.	TREAD
TB	TOWEL BAR
T & G	TONGUE AND GROOVE
T.O.	TOP OF
T.P.	TOWEL PIN
TD	TRENCH DRAIN
THK	THICKNESS
TSCD	TOILET SEAT COVER DISPENSER
TS	TUBE STEEL
TTD	TOILET TISSUE DISPENSER
TYP.	TYPICAL
UNO	UNLESS NOTED OTHERWISE
UTIL.	UTILITY
VERT.	VERTICAL
V.C.T.	VINYL COMPOSITION TILE
V.R.	VAPOR RETARDER
VEST.	VESTIBULE
W.	WOMEN OR WASHING MACHINE
W/	WITH
WC	WATER CLOSET
WD.	WOOD
WNDW	WINDOW
WP	WATER PROOFING
WR	WATER RESISTANT
WWM	WELDED WIRE MESH
L	ANGLE
&	AND
@	AT

ARCHITECTURAL LEGEND

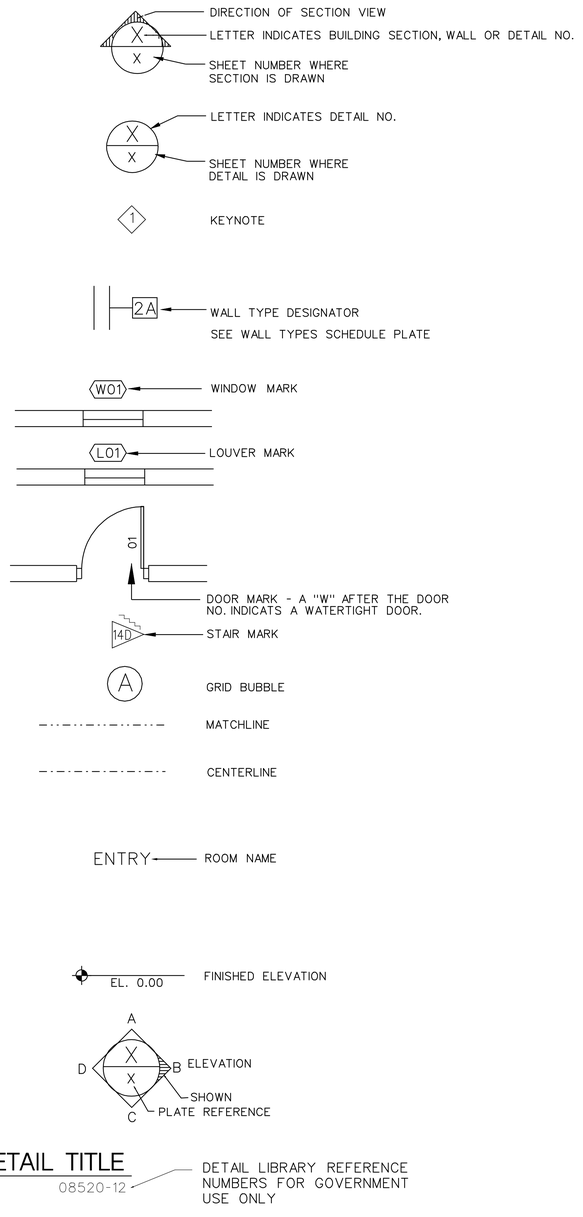

GENERAL NOTES

1. REPETITIVE FEATURES NOTED TYPICAL ON THE DRAWINGS SHALL BE COMPLETELY PROVIDED AS IF DRAWN IN FULL. REPETITIVE FEATURES NOT NOTED ON THE DRAWINGS SHALL BE COMPLETELY PROVIDED AS IF NOTED IN FULL.
2. ALL DIMENSIONS ON ARCHITECTURAL DRAWINGS ARE INDICATED IN FEET AND INCHES.
3. DIMENSIONS ON DRAWINGS ARE TAKEN TO THE FACE OF STUD, BRICK CONCRETE AND/OR TO THE CENTERLINE OF STRUCTURAL STEEL, UNLESS OTHERWISE NOTED.
4. DIMENSIONS INDICATED TO FACE OF CONCRETE ARE TO FACE OF MATERIAL.
5. EXTERNAL CORNERS ON EXPOSED CONCRETE WALLS TO BE CHAMFERED 3/4" TYPICAL, UNLESS OTHERWISE NOTED.
6. REPAIR OR REPLACE SURFACES DAMAGED DURING CONSTRUCTION TO MATCH ADJACENT FINISHED CONDITION. COR SHALL DETERMINE WHEN REPLACEMENT IS REQUIRED FOR ACCEPTABLE APPEARANCE.
7. ALL DOORS IN STUD WALLS NOT LOCATED BY DIMENSION ON PLANS OR DETAILS SHALL BE 100 mm FROM FRAMING OF ADJACENT PERPENDICULAR WALL TO EDGE OF DOOR OPENING.
8. DOOR AND ROOM NUMBERS SHOWN ON DRAWINGS ARE FOR CONSTRUCTION PURPOSES. VERIFY NUMBERING SCHEME WITH COR PRIOR TO FABRICATING PERMANENT LABELS AND SIGNAGE.
9. ALL WOOD IN CONTACT WITH CONCRETE OR MASONRY SHALL BE PRESERVATIVE TREATED WOOD.
10. SIZE ALL FIRE EXTINGUISHER CABINETS TO HOUSE ONE, NFPA 10 TYPE 2-A EXTINGUISHER (9.5 LITER).
11. CONTRACTOR SHALL PROVIDE APPROPRIATE SHIMMING MATERIAL, (WOOD, METAL OR OTHER AS PERMITTED BY IBC) AS REQUIRED TO BRING CONSTRUCTION WITHIN SPECIFIED TOLERANCES AND DIMENSIONS. CONTRACTOR SHALL TRIM ITEMS TO FIT AND OTHERWISE ENSURE PROPER INSTALLATION OF ALL WORK.
12. REFER TO THE SPECIFICATIONS FOR INFORMATION THAT SUPPLEMENTS THESE NOTES AND OTHER DRAWING INFORMATION.
13. ARCHITECTURAL DETAILS ARE INTENDED TO SHOW THE GENERAL CHARACTER AND EXTENT OF THE PROJECT. THEY ARE NOT INTENDED TO SHOW ALL DETAILS OF THE WORK. DETAILS NOTED "TYPICAL" APPLY TO SIMILAR WORK THROUGHOUT THIS BUILDING UNLESS NOTED OTHERWISE.
14. ARCHITECTURAL DRAWINGS ARE FOR INFORMATION INCLUDING, BUT NOT LIMITED TO: DIMENSIONS, ELEVATIONS, SLOPES, DOOR AND WINDOW OPENINGS, NON-BEARING WALLS, CURBS, DRAINS, DEPRESSIONS, RAILINGS, WATERPROOFING, FINISHES AND OTHER NONSTRUCTURAL ITEMS.
15. THE CONTRACTOR IS RESPONSIBLE FOR THE MEANS AND METHODS OF CONSTRUCTION AND ALL JOB RELATED SAFETY STANDARDS.
16. THE CONTRACTOR IS RESPONSIBLE FOR ADVANCED REVIEW OF THE WORK REQUIRED IN THE CONSTRUCTION DOCUMENTS AND THE REQUIREMENTS FOR EXECUTING IT PROPERLY. IF THE CONTRACTOR FINDS DISCREPANCIES IN THE CONSTRUCTION DOCUMENTS OR SPECIFICATION, THEN THE CONTRACTOR SHALL NOTIFY THE CONTRACTING OFFICER IMMEDIATELY. THE CONTRACTOR SHALL WORK TO HAVE ALL DISCREPANCIES RESOLVED WELL IN ADVANCE OF ACTUAL CONSTRUCTION OCCURRING.
17. IN CASE OF DISCREPANCIES BETWEEN THE CONSTRUCTION DOCUMENTS, REFERENCED STANDARDS AND THE GOVERNING CODES, THE CONTRACTING OFFICER WILL DETERMINE WHICH SHALL GOVERN. DISCREPANCIES SHALL BE BROUGHT TO THE ATTENTION OF THE CONTRACTING OFFICER BEFORE PROCEEDING WITH THE WORK.
18. THE CONTRACTOR SHALL VERIFY ALL DIMENSIONS, EXISTING UTILITIES, FIXTURES AND CONDITIONS AT THE SITE. CONFLICTS BETWEEN THE DRAWINGS AND ACTUAL SITE CONDITIONS SHALL BE BROUGHT TO THE ATTENTION OF THE CONTRACTING OFFICER BEFORE PROCEEDING WITH THE WORK.
19. MECHANICAL AND ELECTRICAL INFORMATION SHOWN ON ARCHITECTURAL DRAWINGS IS FOR COORDINATION AND LOCATIONAL PURPOSES ONLY. SEE MECHANICAL AND ELECTRICAL DRAWINGS FOR SPECIFIC INFORMATION ON COMPONENTS AND SYSTEMS.
20. FLASHING COLOR TO MATCH ADJACENT WALL COLOR UNLESS OTHERWISE NOTED.
21. ALL WORK SHALL COMPLY WITH IBC 2003, NFPA 101 (2003), AND UFC 3-600-01. WHERE CONFLICTS OCCUR BETWEEN THESE DOCUMENTS, THE MOST CONSERVATIVE REQUIREMENT SHALL GOVERN.

US Army Corps of Engineers
Seattle District

Description	Symbol	Appr.	Date
			/ /

Designed by: TOLMAN/CHEN
Drawn by: HOPKINS
Checked by: CHEN
Date: 16 MAR 06
File # E-56-14-19
Rev.

U.S.ARMY ENGINEER DISTRICT,SEATTLE
CORPS OF ENGINEERS
SEATTLE, WASHINGTON
Prepared by:

ADDITIONAL WATER STORAGE PROJECT
HOWARD HANSON DAM
GREEN RIVER WASHINGTON

ABBREVIATIONS AND NOTES

Plate number:
A-001
Sheet of

DESIGN FILE: I:\AECDESIGNS\HHAW\Architectural\HHAWA-00INTS.DGN
DATE AND TIME PLOTTED: 07-AUG-2008 12:46

LIFE SAFETY SUMMARY SHEET

1. FACILITY DESCRIPTION: THIS PROJECT IS A LARGELY UNOCCUPIED FISH PASSAGE FACILITY CONSISTING OF 9 STORIES BELOW GRADE AND 6 STORIES ABOVE THE BUILDING IS MADE UP OF A TOWER, FISHWELL, WETWELL AND COLLECTORS. OCCUPIABLE SPACES ARE IN THE TOWER AND IN GALLERIES WHICH PROVIDE ACCESS TO THE FISH COLLECTION AND WATER MANAGEMENT EQUIPMENT.

2. GOVERNING CODES AND CRITERIA: UFC 1-200-01 "GENERAL BUILDING REQUIREMENTS", 2003 INTERNATIONAL BUILDING CODE (IBC), TI 800-01 "DESIGN CRITERIA", CORPS OF ENGINEERS, 1998 (amended), NFPA 70 "NATIONAL ELECTRICAL CODE", NFPA 72 "NATIONAL FIRE ALARM CODE" NFPA 101 "LIFE SAFETY CODE" 2003, AND UFC 3-600-01 "FIRE PROTECTION ENGINEERING FOR FACILITIES".

3. GENERAL CODE COMPLIANCE CONCEPT: THIS FACILITY IS DESIGNED TO MEET THE CRITERIA OF THE CODES LISTED ABOVE. WHERE CONFLICTS EXIST BETWEEN CODES, THE MOST RESTRICTIVE REQUIREMENTS SHALL APPLY. EXITING AND GENERAL LIFE SAFETY DESIGN SHALL BE CONSISTENT WITH NFPA 101. BUILDING CONSTRUCTION AND MATERIALS SHALL CONFORM TO THE IBC. THE FISH PASSAGE FACILITY IS CONSIDERED ONE INDEPENDENT STRUCTURE.

4. CONSTRUCTION TYPE: CONSTRUCTION TYPE OF THIS BUILDING AND SHALL CONFORM TO IBC REQUIREMENTS FOR TYPE "I-A" CONSTRUCTION.

5. OCCUPANCY CLASSIFICATION: FACILITY IS GROUP "U, MISCELLANEOUS", PER 2003 IBC AND "SPECIAL PURPOSE INDUSTRIAL" PER NFPA101.

6. ESTIMATED BUILDING AREAS (PER FLOOR)

BUILDING	ACTUAL AREA	ALLOWABLE AREA/FLR
BELOW GRADE	6,535 SF	UNLIMITED
ABOVE GRADE	1,633 SF	UNLIMITED

7. TOTAL AREA FISH PASSAGE FACILITY HEIGHT
ALLOWED STORIES: UNLIMITED (IBC TABLE 503 & 504.2)
ALLOWED HEIGHT: UNLIMITED (IBC 504.2)
ACTUAL: 16 STORIES AND 231.5'
(IBC ALLOWED = UNLIMITED)

8. NUMBER OF OCCUPANTS: 10 OCCUPANTS MAXIMUM

NFPA 101 OCCUPANT LOAD FACTORS: SPECIAL PURPOSE INDUSTRIAL: "OCCUPANT LOAD SHALL NOT BE LESS THAN THE MAXIMUM PROBABLE NUMBER OF OCCUPANTS PRESENT AT ANY TIME." (NFPA TABLE 7.3.1.2)
MOST FLOORS IN THIS TOWER ARE CONSIDERED NON-OCCUPIED AND ARE NEEDED FOR MECHANICAL ACCESS ONLY. THE ONLY LEVELS CONSIDERED OCCUPIABLE FLOORS ARE:
10th FLOOR (1181.00')
11th FLOOR (1194.00')
14th FLOOR (1228.00')

9. MINIMUM EXIT WIDTH (NFPA 101 - TABLE) REQUIRED: STAIRWAYS - 0.3" PER OCCUPANT, LEVEL COMPONENTS - 0.2" PER OCCUPANT MINIMUM WIDTH: 36" REQ. (EXCEPT DOORS) STAIRS - 36" REQ. (ACTUAL 46") BARRACKS: LEVEL COMPONENTS - 36" REQ. (ACTUAL 66")

10. NUMBER OF MEANS OF EGRESS (NFPA 101 - 40.2.4.1.2) "A SINGLE MEANS OF EGRESS SHALL BE PERMITTED FROM ANY STORY OR SECTION IN LOW AND ORDINARY HAZARD INDUSTRIAL OCCUPANCIES, PROVIDED THAT THE EXIT CAN BE REACHED WITHIN THE DISTANCE PERMITTED AS A COMMON PATH OF TRAVEL (50' PER TABLE 40.2.5 - 100' WITH AN APPROVED FIRE SPRINKLER SYSTEM).

11. REQUIRED FIRE RESISTANCE RATINGS OF ELEMENTS: FLOOR CONSTRUCTION: 2 HOUR FIRE RATED MINIMUM. BEARING WALLS: 3 HOUR FIRE RATED MINIMUM. ROOF CONSTRUCTION: 1 1/2 HOUR FIRE RATED MINIMUM. EXIT ENCLOSURES: 2 HOUR FIRE RATED CONTINUOUSLY FROM LOWEST POINT TO FLOOR OR ROOF DECK ABOVE. MISCELLANEOUS CONSTRUCTION SHALL BE FIRE RATED AS DRAWN OR INDICATED. ALL PENETRATIONS THROUGH FIRE RATED ASSEMBLIES SHALL BE FIRESTOPPED. ALL GAPS BETWEEN RATED FLOOR ASSEMBLIES AND WALLS SHALL BE FILLED WITH FIRESAFING INSULATION TO MAINTAIN THE INDICATED FIRE RATING. DOORS AND WINDOWS IN RATED CONSTRUCTION SHALL BE RATED AND INSTALLED AS REQUIRED BY NFPA 80 AND 101.

12. DISTANCE SEPARATION ON ALL SIDES OF THE ABOVE-GROUND TOWER IS GREATER THAN 30'. PER IBC TABLE 704.8, THERE IS NO LIMIT FOR UNPROTECTED OPENINGS. EXTERIOR GLAZING IS NOT REQUIRED TO BE RATED.

13. PER IBC 707.2 EXCEPTION 7, AND NFPA 101 8.6.8.2, UNPROTECTED FLOOR OPENINGS ARE ALLOWED IN THIS FACILITY, AS LONG AS NO MORE THAN 2 FLOORS ARE CONNECTED BY SUCH OPENINGS. THIS OCCURS IN THE TOWER AT 1194' LEVEL ONLY.

14. CORRIDOR CONSTRUCTION: ALL CORRIDORS SHALL HAVE ONE HOUR RATED FIRE WALLS WITH SELF-CLOSING, 20 MINUTE FIRE RATED DOORS. STAIRWAY DOORS SHALL BE 1 1/2 HOUR FIRE RATED. ALL STAIRWELL PENETRATIONS SHALL BE FIRESTOPPED.

15. PROTECTION OF VERTICAL OPENINGS NFPA 101 - 40.3.1 (1): IN SPECIAL PURPOSE INDUSTRIAL ... OCCUPANCIES WHERE UNPROTECTED VERTICAL OPENINGS EXIST AND ARE NECESSARY TO MANUFACTURING OPERATIONS, SUCH OPENINGS SHALL BE PERMITTED BEYOND THE SPECIFIED LIMITS, PROVIDED THAT EVERY FLOOR LEVEL HAS DIREST ACCESS TO ONE OR MORE ENCLOSED STAIRS OR OTHER EXITS PROTECTED AGAINST OBSTRUCTION BY ANY FIRE OR SMOKE IN THE OPEN AREAS CONNECTED BY THE UNPROTECTED VERTICAL OPENINGS.

16. STAIRWAY MARKING IN ACCORDANCE WITH NFPA 101 7.2.2.5.4 SHALL BE PROVIDED PER SIGNAGE SCHEDULE.

17. PORTABLE 2-A RATED FIRE EXTINGUISHERS WILL BE PROVIDED ON EACH FLOOR, MOUNTED ON WALL BRACKET. LOCATION INDCATED (FE) ON PLANS

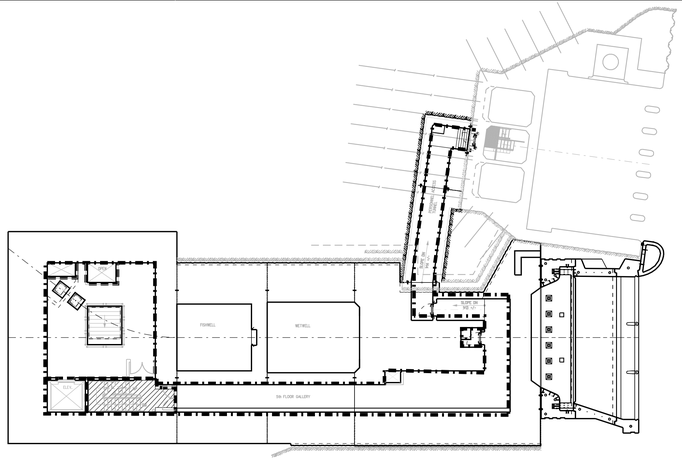

5TH FLOOR PLAN EL:1074.13'

TYPICAL OF STORIES BELOW GRADE

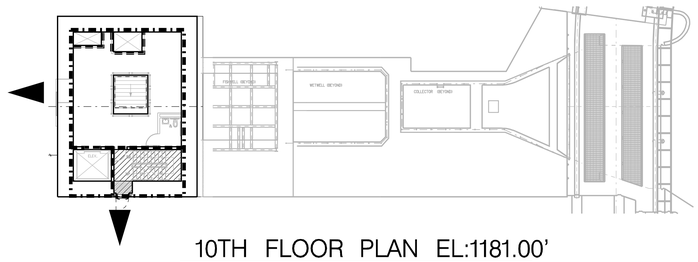

10TH FLOOR PLAN EL:1181.00'

TYPICAL OF STORIES ABOVE GRADE

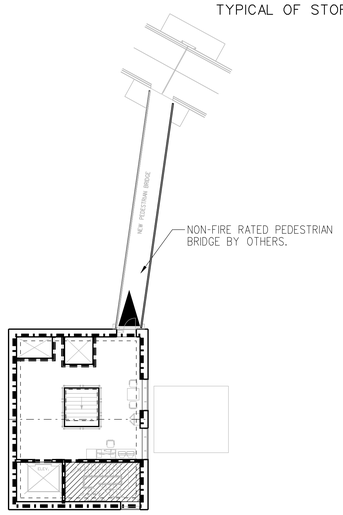

14TH FLOOR PLAN EL:1228.00'

1 EXITING /FIRE BARRIERS

1/16"=1'-0"

LEGEND

- 2 HOUR FIRE RATED WALLS
- 3 HOUR FIRE RATED WALLS
- EXTERIOR EXIT LOCATION
- STAIR ENCLOSURES - 2 HOUR RATED

NOTES

1. REFER TO ELECTRICAL LIGHTING PLANS FOR EXIT SIGN LOCATIONS AT EACH FLOOR.

US Army Corps of Engineers
Seattle District

Symbol	Description	Appr.	Date
			/ /

Date: 16 MAR 06
File #: E-56-14-19
Rev.

Designed by: TOLMAN/CHEN
Drawn by: HOPKINS
Checked by: CHEN

U.S.ARMY ENGINEER DISTRICT,SEATTLE
CORPS OF ENGINEERS
SEATTLE, WASHINGTON

Prepared by:

ADDITIONAL WATER STORAGE PROJECT
HOWARD HANSON DAM
GREEN RIVER WASHINGTON

LIFE SAFETY SUMMARY

Plate number: A-002
Sheet of

DATE AND TIME PLOTTED: 07-AUG-2008 12:46
DESIGN FILE: I:\AECDESIGNS\HHAW\Architectural\HHAWA-002LSS.DGN

GENERAL FLOOR PLAN NOTES

1. FLOOR SLABS DESIGNATED TO BE SLOPED SHALL BE SLOPED 1/8" PER 1'-0" MIN AND 1/4" PER 1'-0" MAX.

2. SEE STRUCTURAL DRAWINGS FOR DIMENSIONS TO STRUCTURAL CONCRETE WALLS AND SLAB OPENINGS.

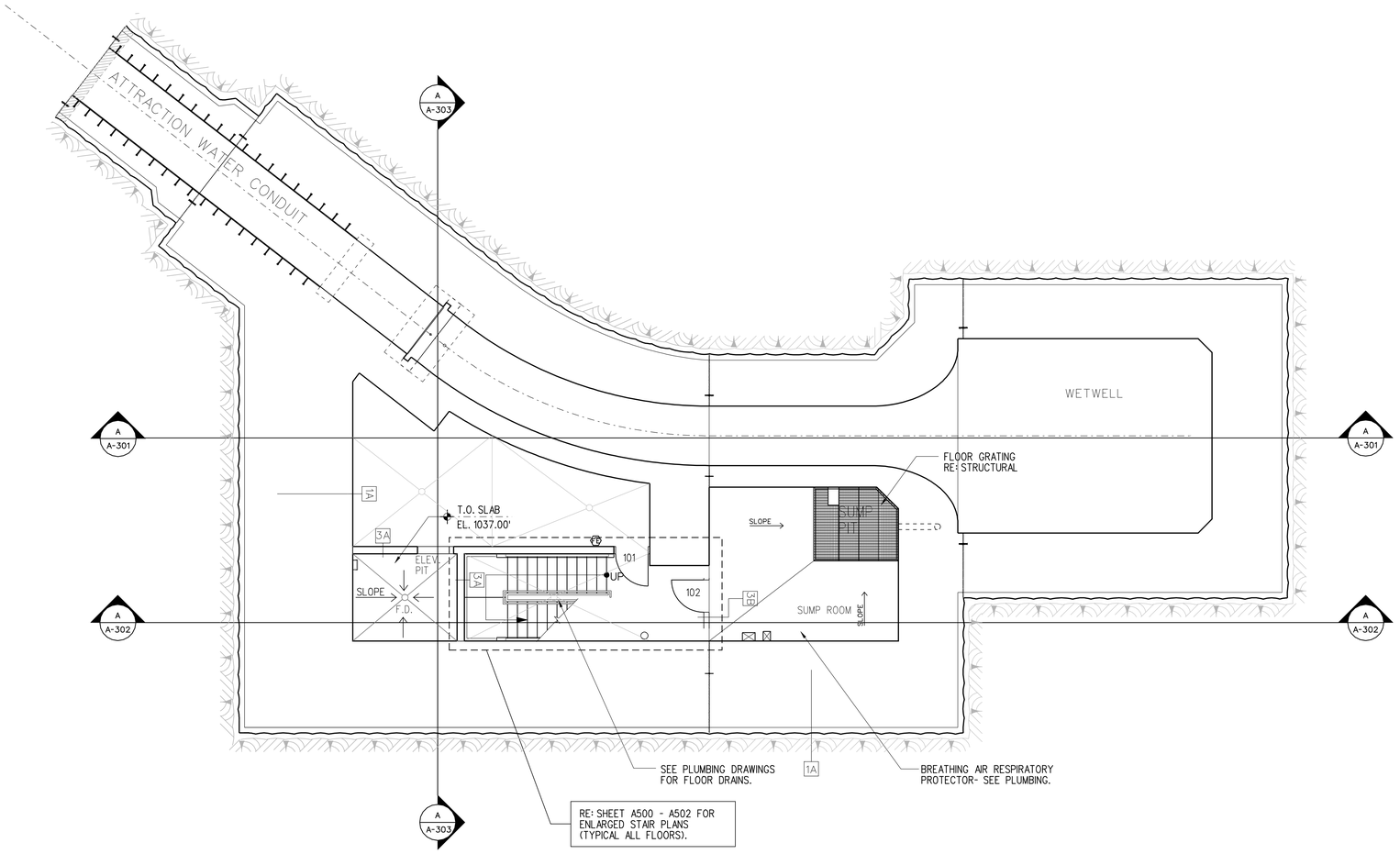

1ST FLOOR PLAN EL: 1029.00'

3/16"=1'-0"

3/16" = 1'-0" 5' 0 5' 10'

US Army Corps of Engineers
Seattle District

Symbol	Description	Date	Appr.	Symbol	Description
		/ /			

Designed by: TOLMAN/CHEN
Drawn by: TOLMAN/HOPKINS
Checked by: CHEN
Date: 16 MAR 06
File: E-56-14-19
Rev.

U.S.ARMY ENGINEER DISTRICT,SEATTLE
CORPS OF ENGINEERS
SEATTLE, WASHINGTON
Prepared by:

ADDITIONAL WATER STORAGE PROJECT
HOWARD HANSON DAM
GREEN RIVER WASHINGTON

1ST FLOOR PLAN
ELEVATION 1029.00'

Plate number:
A-101
Sheet of

DATE AND TIME PLOTTED: 07-AUG-2008 12:47
DESIGN FILE: I:\AECDESIGNS\HHAW\Architectural\HHAWA-101F01.DGN

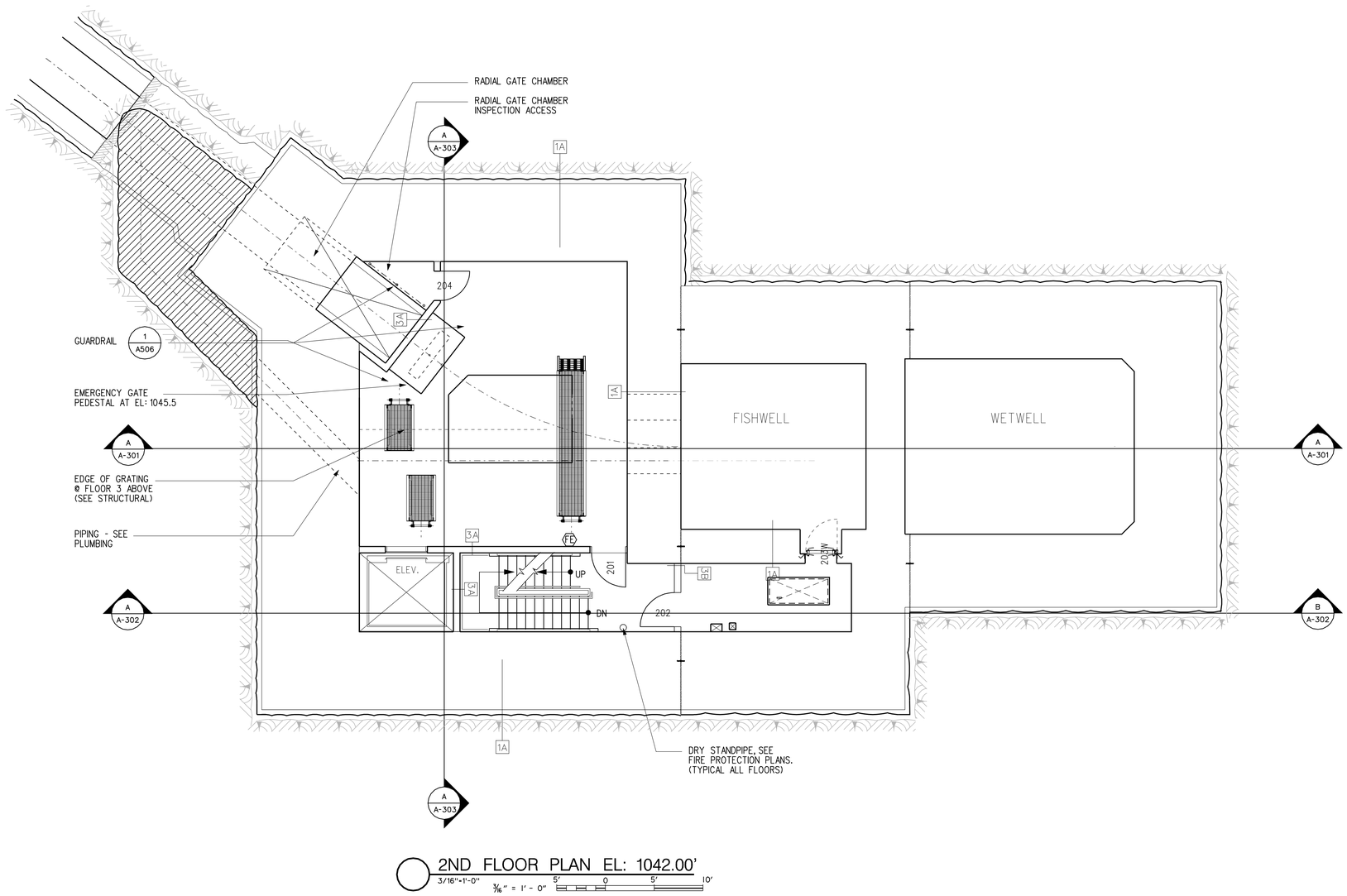

2ND FLOOR PLAN EL: 1042.00'

3/16"=1'-0" 3/8" = 1' - 0" 5' 0 5' 10'

US Army Corps of Engineers
Seattle District

Symbol	Description
Appr.	
Date	/ /

Date: 16 MAR 06
File: E-56-14-19
Rev.

Designed by: TOLMAN/CHEN
Drawn by: HOPKINS
Checked by: CHEN

U.S.ARMY ENGINEER DISTRICT SEATTLE
CORPS OF ENGINEERS
SEATTLE, WASHINGTON
Prepared by:

ADDITIONAL WATER STORAGE PROJECT
HOWARD HANSON DAM
2ND FLOOR PLAN
ELEVATION 1042.00'
GREEN RIVER WASHINGTON

Plate number:
A-102
Sheet of

DESIGN FILE: J:\ACCDESIGNS\HHAW\Architectural\HHAWA-102F02.DGN
DATE AND TIME PLOTTED: 07-AUG-2008 12:47

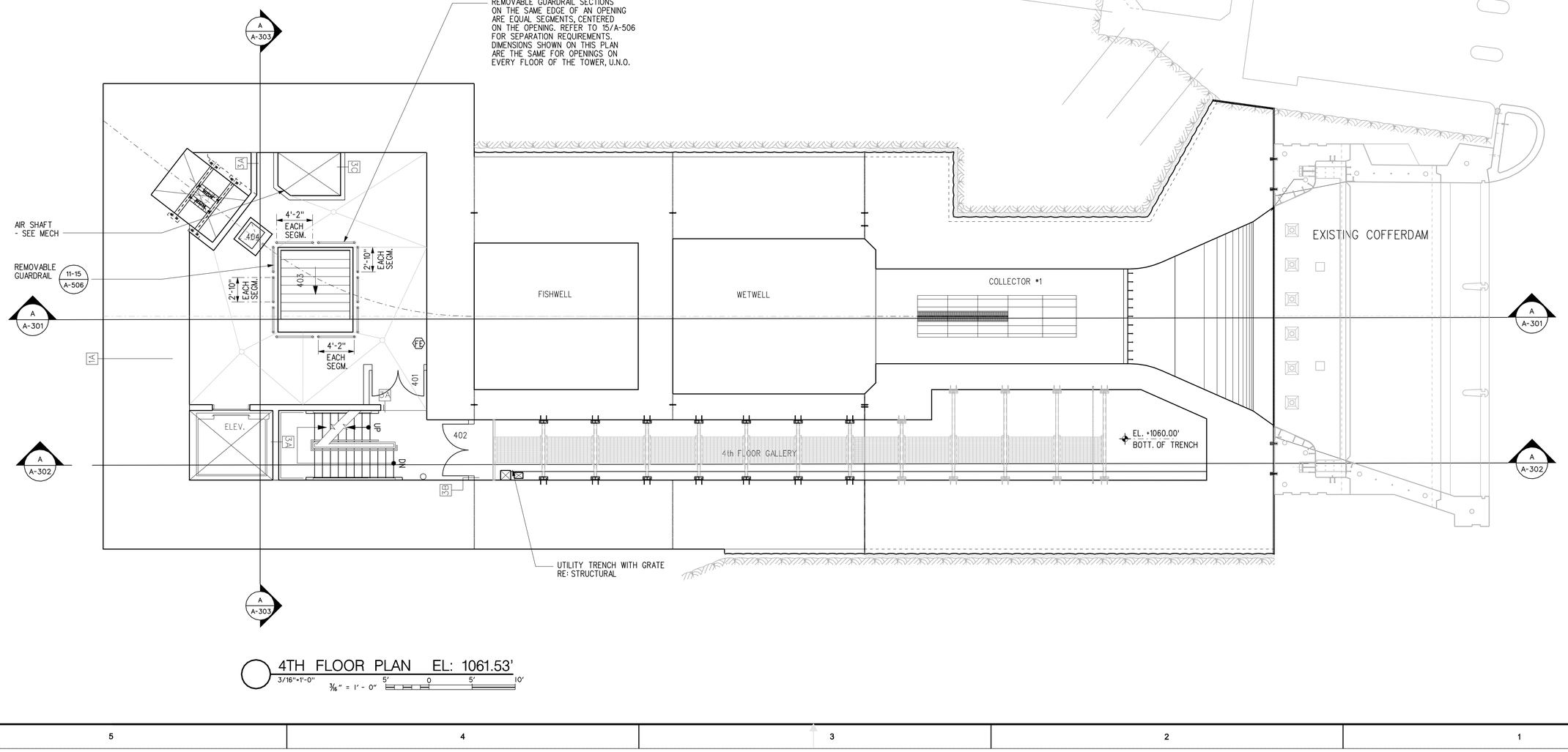

4TH FLOOR PLAN EL: 1061.53'
3/16"=1'-0"
3/8" = 1' - 0"
5' 0 5' 10'

US Army Corps of Engineers
Seattle District

Symbol	Description	Date	Appr.	Symbol	Description
		/ /			

Designed by: TOLMAN/CHEN
Drawn by: TOLMAN
Checked by: CHEN
Date: 16 MAR 06
File: E-56-14-19
Rev.

U.S.ARMY ENGINEER DISTRICT SEATTLE
CORPS OF ENGINEERS
SEATTLE, WASHINGTON
Prepared by:

ADDITIONAL WATER STORAGE PROJECT
HOWARD HANSON DAM
GREEN RIVER WASHINGTON

4TH FLOOR PLAN ELEVATION 1061.53'

Plate number: A-104
Sheet of

DESIGN FILE: I:\AECDESIGNS\HHAW\Architectural\HHAWA-104F04.DGN
DATE AND TIME PLOTTED: 07-AUG-2008 12:47

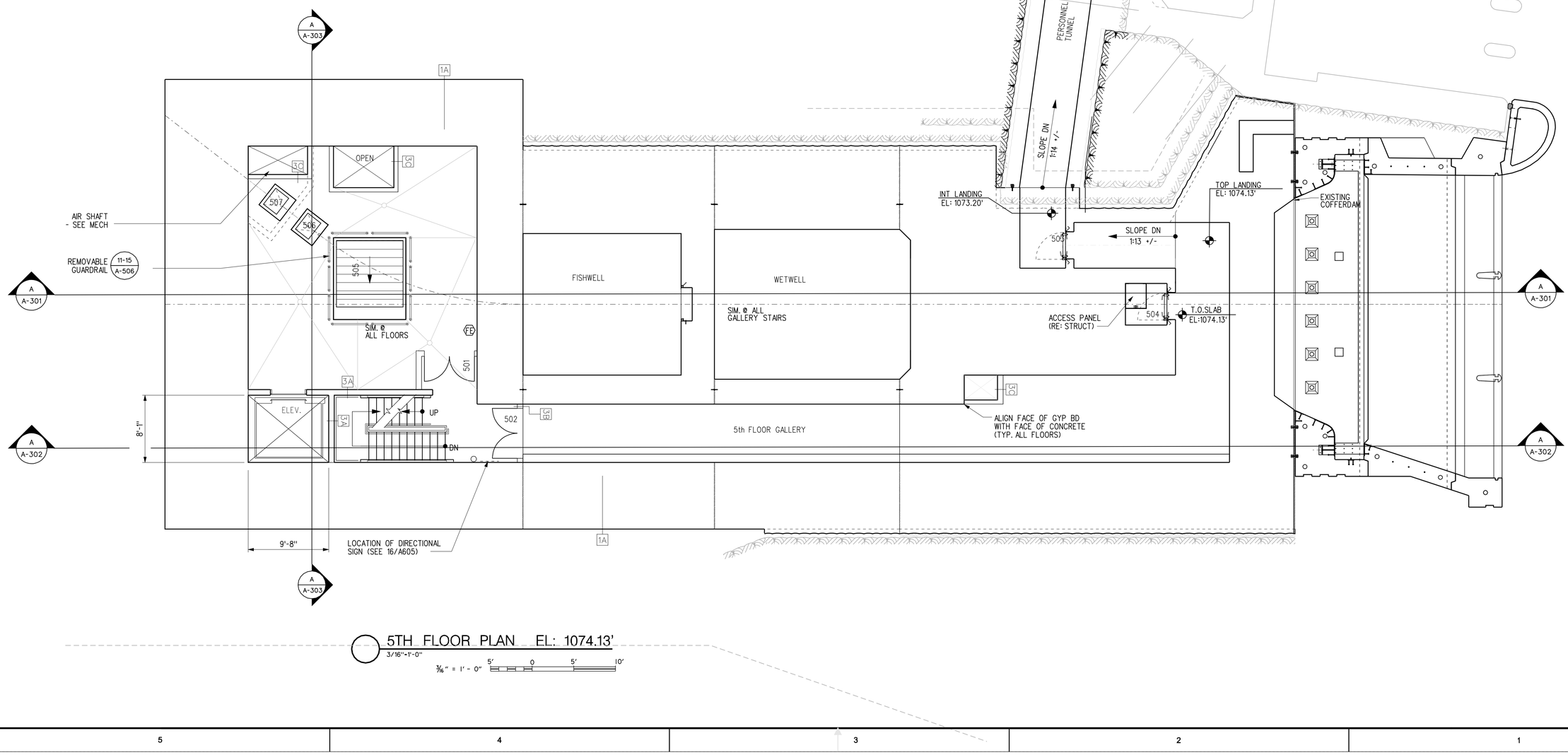

5TH FLOOR PLAN EL: 1074.13'
3/16"=1'-0"

3/16" = 1' - 0" 5' 0 5' 10'

US Army Corps of Engineers
Seattle District

Symbol	Description	Appr.	Date
			/ /

Designed by: TOLMAN/CHEN
Drawn by: TOLMAN
Checked by: CHEN
Date: 16 MAR 06
File: E-56-14-19
Rev.

U.S.ARMY ENGINEER DISTRICT, SEATTLE
CORPS OF ENGINEERS
SEATTLE, WASHINGTON
Prepared by:

ADDITIONAL WATER STORAGE PROJECT
HOWARD HANSON DAM
5TH FLOOR PLAN
ELEVATION 1074.13'
GREEN RIVER WASHINGTON

Plate number:
A-105
Sheet of

DESIGN FILE: I:\AECDESIGNS\HHAW\Architectural\HHAWA-105F05.DGN
DATE AND TIME PLOTTED: 07-AUG-2008 12:48

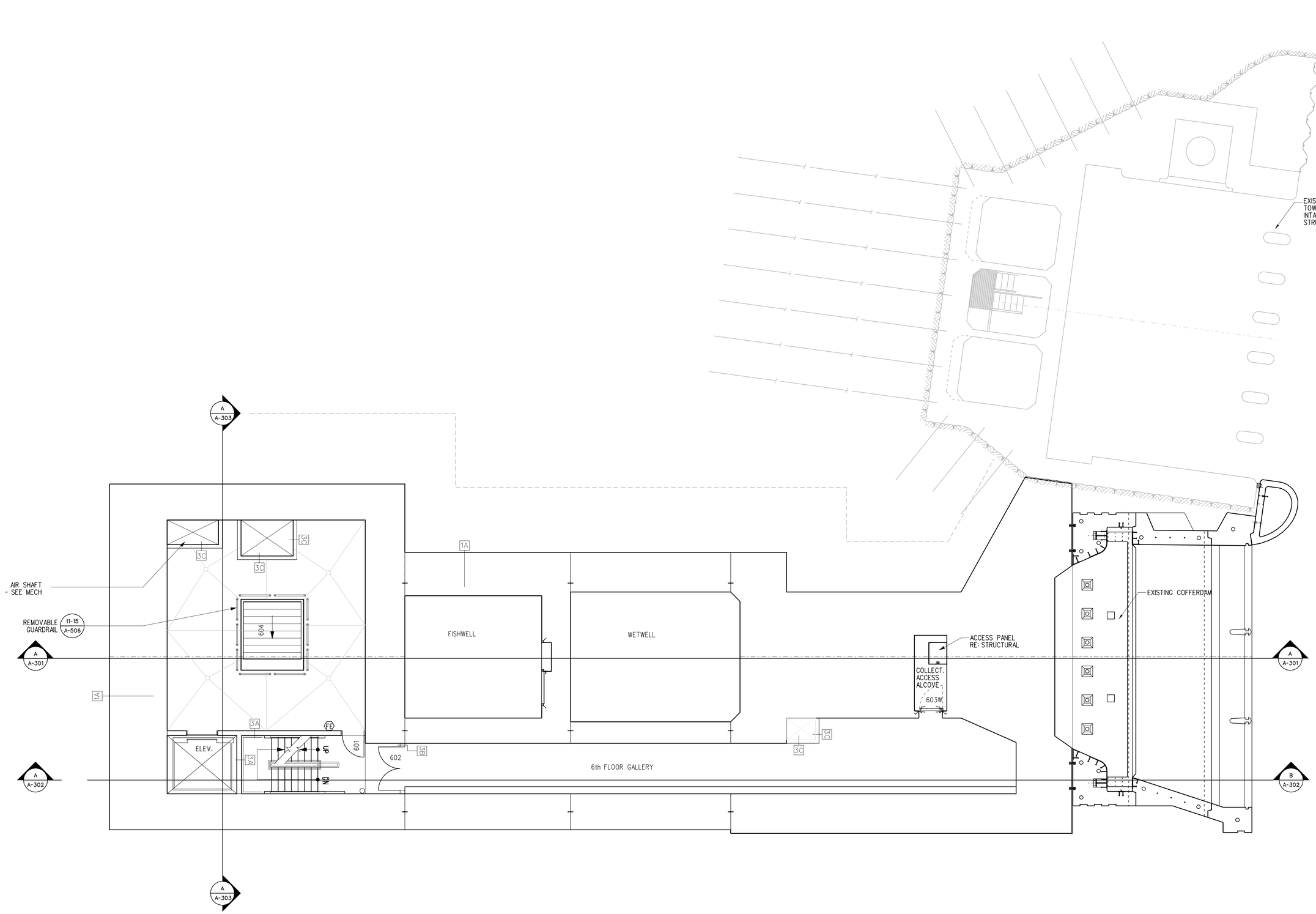

6TH FLOOR PLAN EL: 1096.09'

3/16"=1'-0"

3/16" = 1'-0" 5' 0 5' 10'

US Army Corps of Engineers
Seattle District

Symbol	Description	Symbol	Appr.	Date
				/ /

Designed by: TOLMAN/CHEN
Drawn by: TOLMAN
Checked by: CHEN
Date: 16 MAR 06
File: E-56-14-19
Rev.

U.S.ARMY ENGINEER DISTRICT,SEATTLE
CORPS OF ENGINEERS
SEATTLE, WASHINGTON
Prepared by:

ADDITIONAL WATER STORAGE PROJECT
HOWARD HANSON DAM
GREEN RIVER WASHINGTON

6TH FLOOR PLAN ELEVATION 1096.09'

Plate number: A-106
Sheet of

DATE AND TIME PLOTTED: 07-AUG-2008 12:49
DESIGN FILE: J:\AECDESIGNS\HHAW\Architectural\HHAWA-106F06.DGN

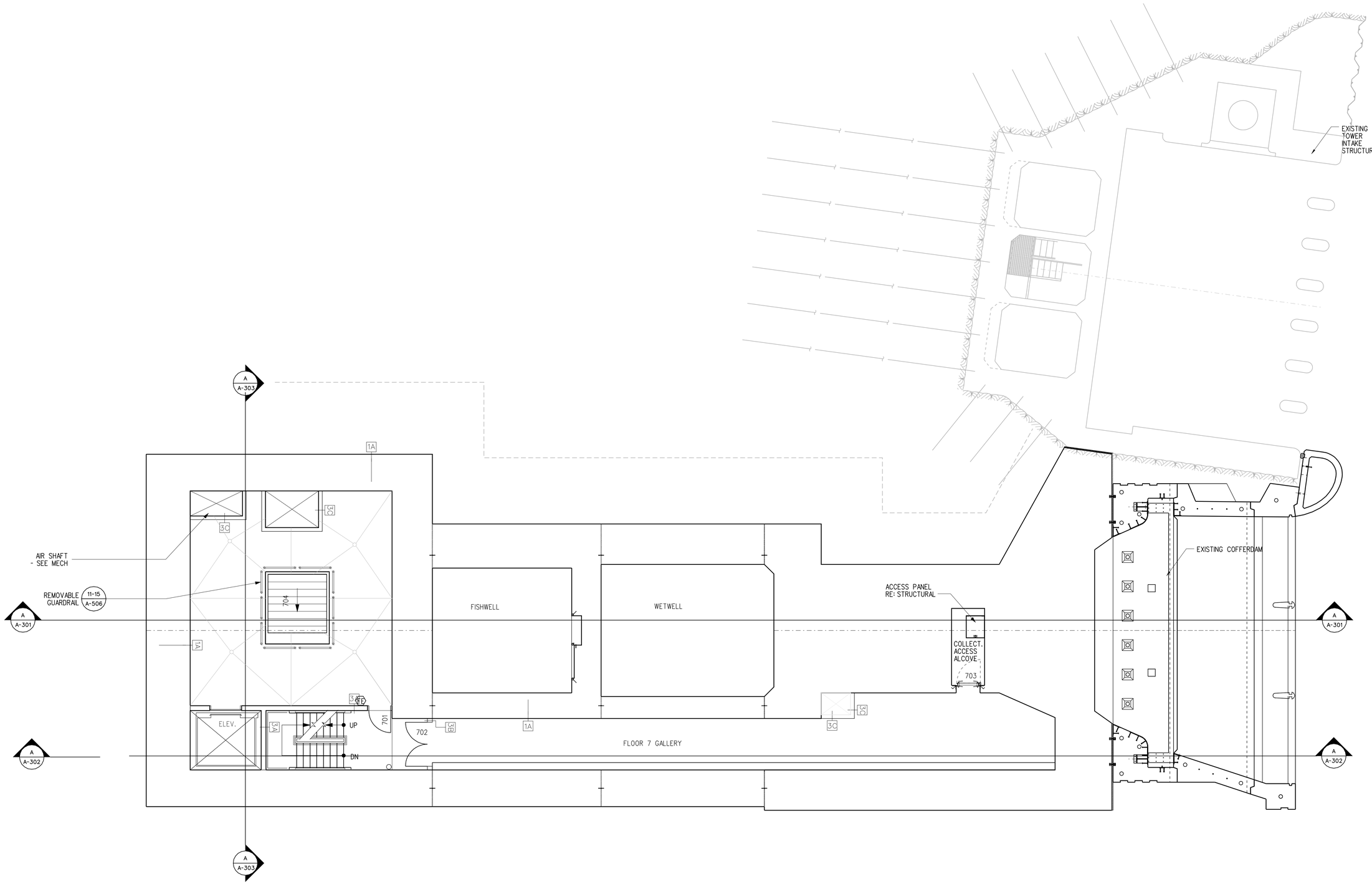

7TH FLOOR PLAN EL: 1118.05'

3/16"=1'-0" 3/16" = 1'-0" 5' 0 5' 10'

US Army Corps of Engineers
Seattle District

Symbol	Description	Date	Appr.	Symbol
		/ /		

Designed by: TOLMAN/CHEN
Drawn by: TOLMAN
Checked by: CHEN
Date: 16 MAR 06
File • E-56-14-19
Rev.

U.S.ARMY ENGINEER DISTRICT,SEATTLE
CORPS OF ENGINEERS
SEATTLE, WASHINGTON
Prepared by:

ADDITIONAL WATER STORAGE PROJECT
HOWARD HANSON DAM
GREEN RIVER WASHINGTON

7TH FLOOR PLAN ELEVATION 1118.05'

Plate number: A-107
Sheet of

DESIGN FILE: I:\AECDESIGNS\HHAW\Architectural\HHAWA-107F07.DGN
DATE AND TIME PLOTTED: 07-AUG-2008 12:49

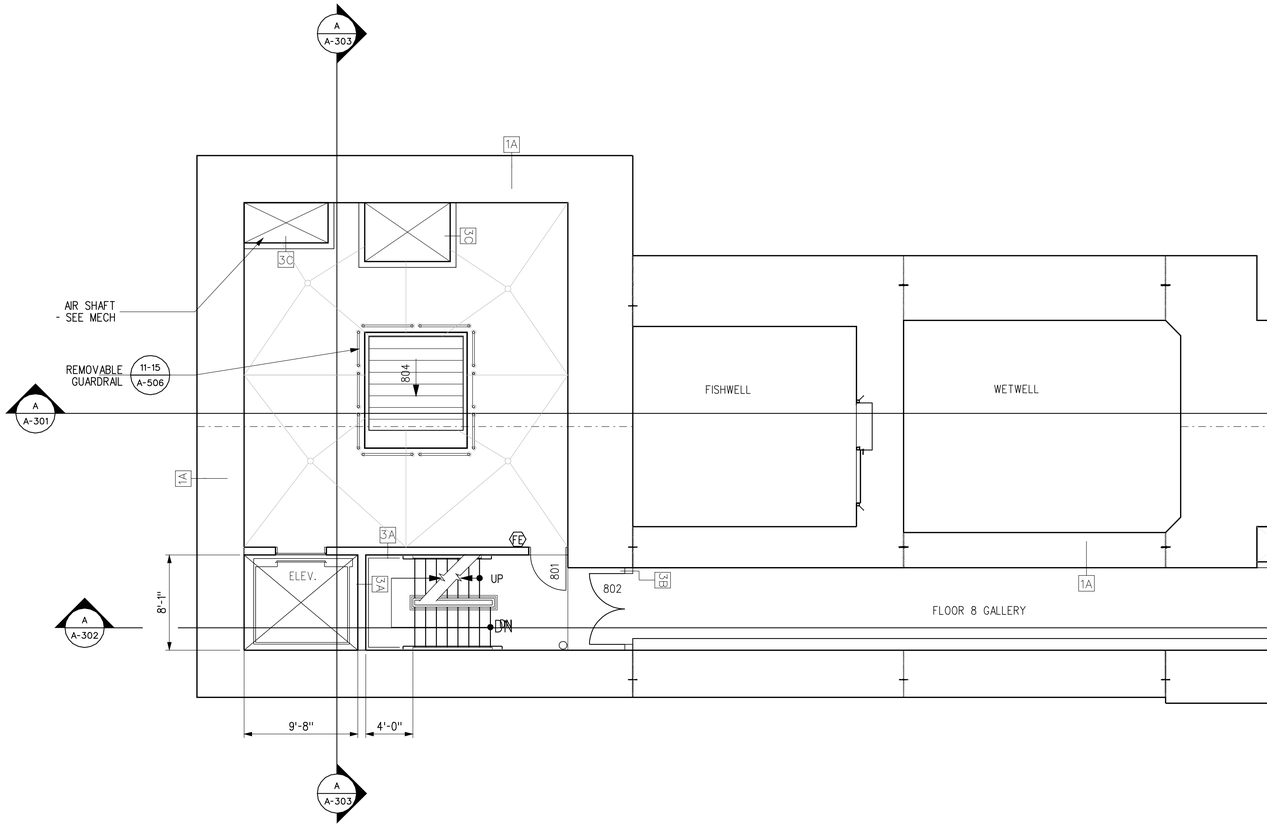

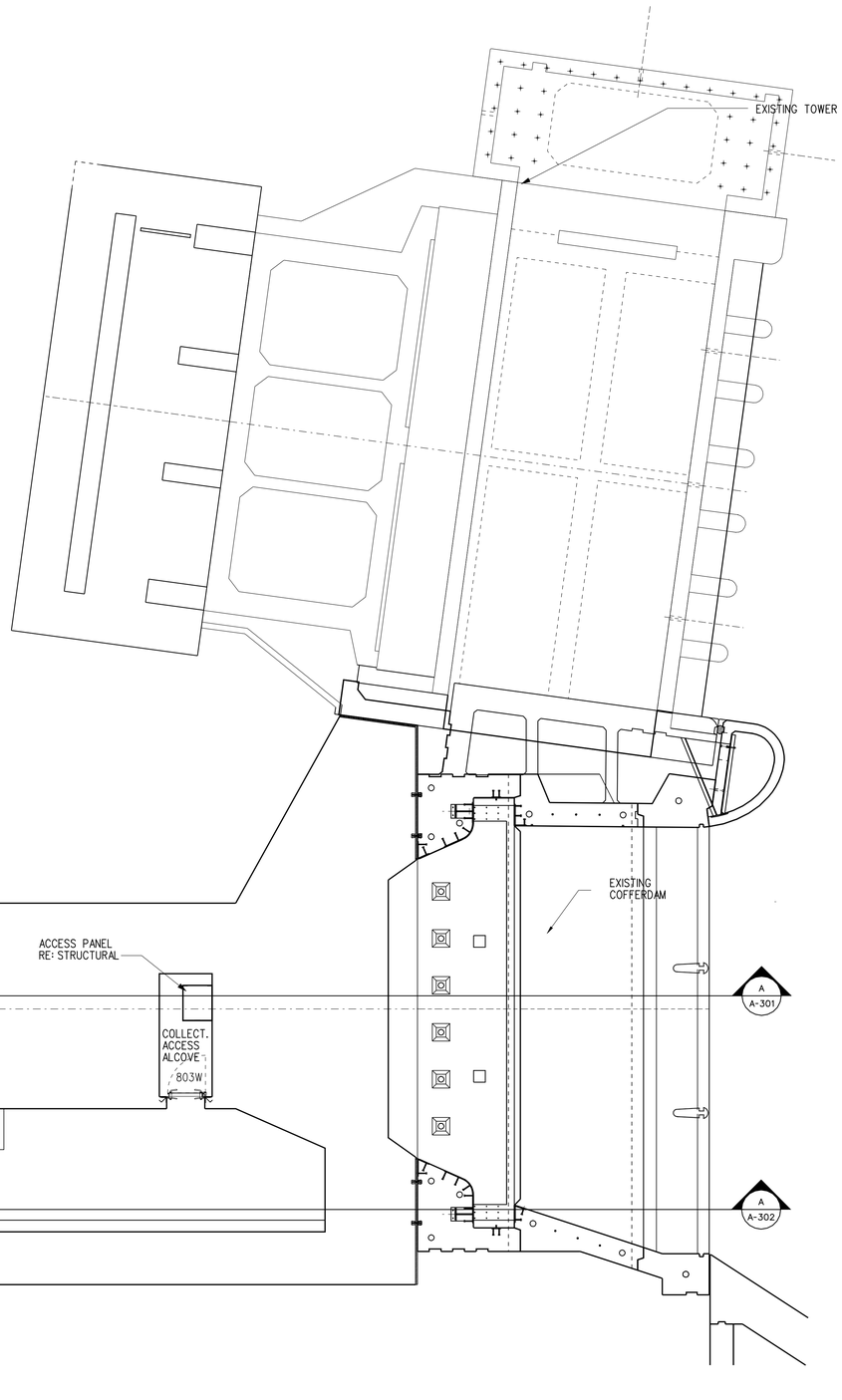

8TH FLOOR PLAN EL: 1140.01'

3/16"=1'-0"

3/8" = 1'-0" 5' 0 5' 10'

US Army Corps of Engineers
Seattle District

Symbol	Description	Date	Appr.
		/ /	

Designed by:	TOLMAN/CHEN
Drawn by:	TOLMAN
Checked by:	CHEN
Prepared by:	

U.S.ARMY ENGINEER DISTRICT,SEATTLE
CORPS OF ENGINEERS
SEATTLE, WASHINGTON

Date: 16 MAR 06
File: E-56-14-19
Rev.

ADDITIONAL WATER STORAGE PROJECT
HOWARD HANSON DAM
GREEN RIVER WASHINGTON

8TH FLOOR PLAN
ELEVATION 1140.01'

Plate number:
A-108
Sheet of

FILE: I:\AECDESIGNS\HHAW\Architectural\HHAWA-108F08.DGN
DESIGN FILE: 12:50
DATE AND TIME PLOTTED: 07-AUG-2008

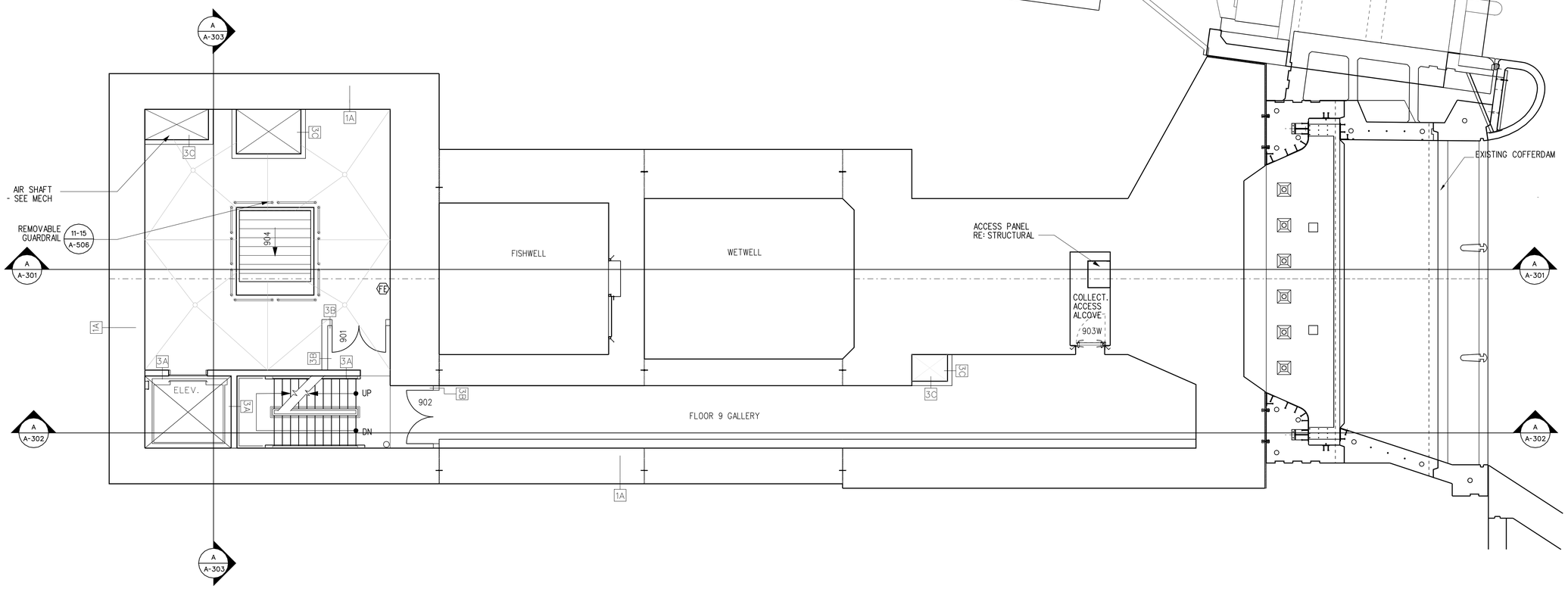

9TH FLOOR PLAN EL: 1163.38'

3/16"=1'-0"

3/16" = 1' - 0" 5' 0 5' 10'

US Army Corps of Engineers
Seattle District

Symbol	Description	Appr.	Date
			/ /

Designed by:	CHEN
Drawn by:	CHEN
Checked by:	CHEN
Date:	16 MAR 06
File:	E-56-14-19
Rev.	

U.S.ARMY ENGINEER DISTRICT,SEATTLE
CORPS OF ENGINEERS
SEATTLE, WASHINGTON
Prepared by:

ADDITIONAL WATER STORAGE PROJECT
HOWARD HANSON DAM
GREEN RIVER

9TH FLOOR PLAN
ELEVATION 1163.38'

WASHINGTON

Plate number:
A-109
Sheet of

DATE AND TIME PLOTTED: 07-AUG-2008 12:50
DESIGN FILE: J:\ACCDESIGNS\HHAW\Architectural\HHAWA-109F09.DGN

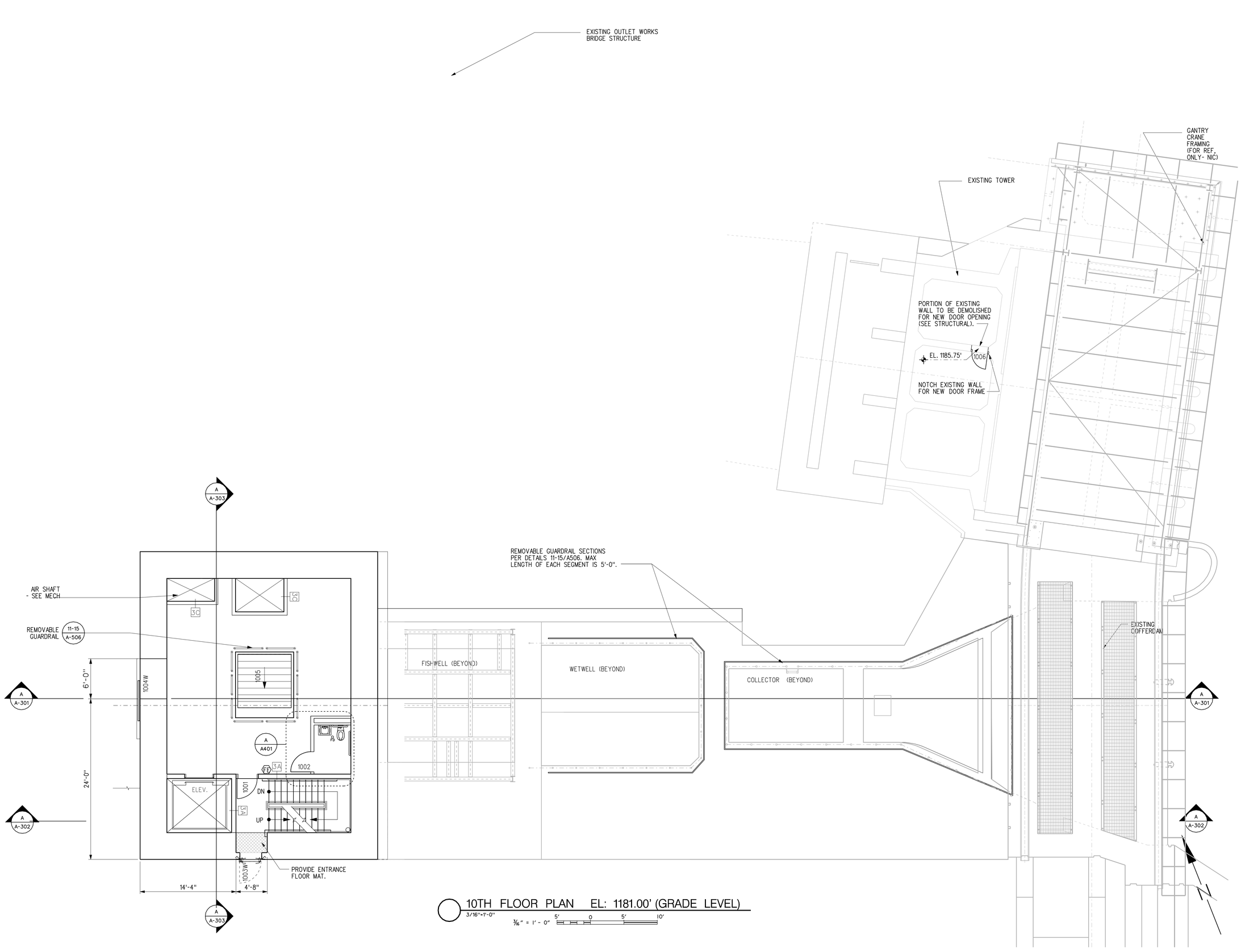

10TH FLOOR PLAN EL: 1181.00' (GRADE LEVEL)

3/16"=1'-0"

3/16" = 1'-0" 5' 0 5' 10'

US Army Corps of Engineers
Seattle District

Symbol	Description	Date	Appr.	Symbol	Description
		/ /			

Designed by: TOLMAN/CHEN
Drawn by: TOLMAN
Checked by: CHEN
Date: 16 MAR 06
File - E-56-14-19
Rev.

U.S.ARMY ENGINEER DISTRICT,SEATTLE
CORPS OF ENGINEERS
SEATTLE, WASHINGTON
Prepared by:

ADDITIONAL WATER STORAGE PROJECT
HOWARD HANSON DAM
GREEN RIVER

10TH FLOOR PLAN ELEVATION 1181.0'

WASHINGTON

Plate number: A-110
Sheet of

DATE AND TIME PLOTTED: 07-AUG-2008 12:50
DESIGN FILE: J:\AECDESIGNS\HHAW\Architectural\HHAWA-110F10.DGN

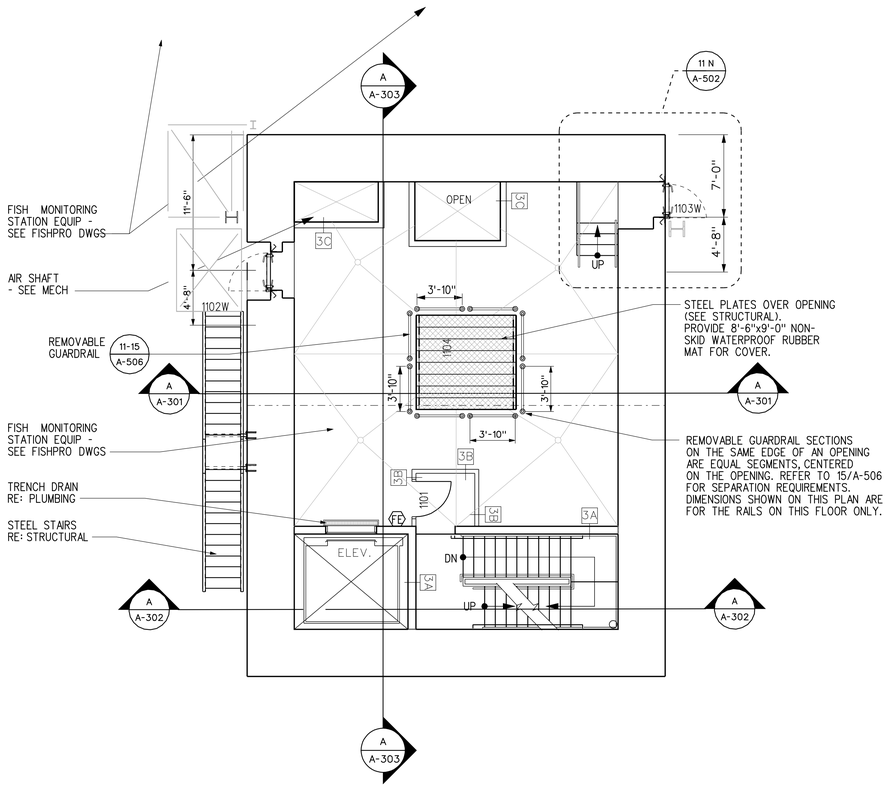

11TH FLOOR PLAN EL: 1194.00'

3/16"=1'-0"

3/8" = 1'-0" 5' 0 5' 10'

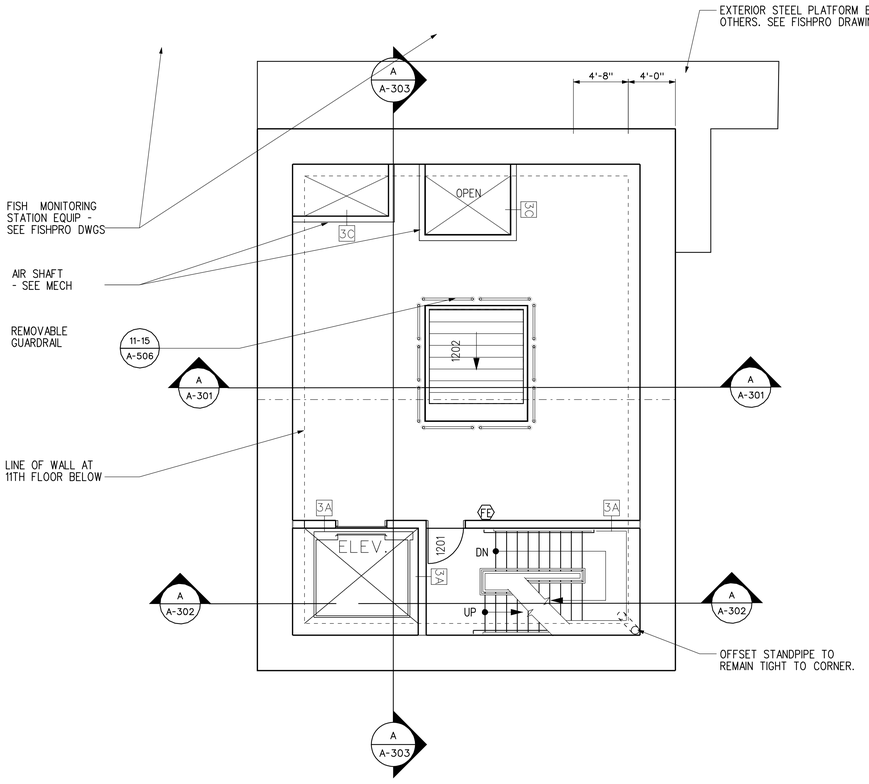

12TH FLOOR PLAN EL: 1204.00'

3/16"=1'-0"

3/8" = 1'-0" 5' 0 5' 10'

US Army Corps of Engineers
Seattle District

Symbol	Description	Appr.	Date
			/ /

Designed by: TOLMAN/CHEN
Drawn by: HOPKINS
Checked by: CHEN
Date: 16 MAR 06
File # E-56-14-19
Rev.

U.S.ARMY ENGINEER DISTRICT,SEATTLE
CORPS OF ENGINEERS
SEATTLE, WASHINGTON
Prepared by:

ADDITIONAL WATER STORAGE PROJECT
HOWARD HANSON DAM
11TH-12TH FLOOR PLANS
EL 1194.00' - 1204.00'
GREEN RIVER WASHINGTON

Plate number: A-111
Sheet of

DATE AND TIME PLOTTED: 07-AUG-2008 12:51
DESIGN FILE: J:\ACCDESIGNS\HHAW\Architectural\HHAWA-111F11.DGN

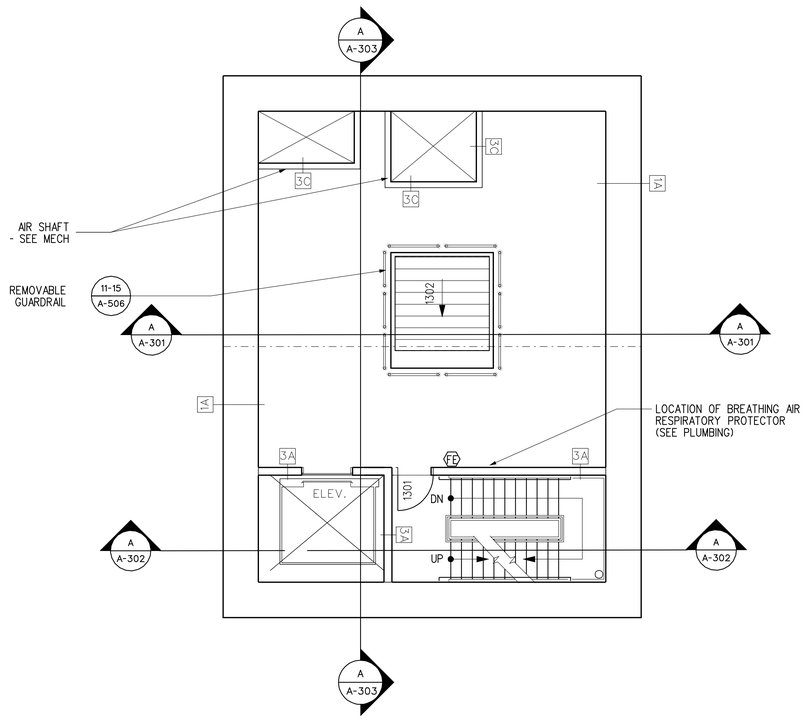

13TH FLOOR PLAN EL: 1216.00'

1/8"=1'-0"

3/8" = 1'-0" 5' 0 5' 10'

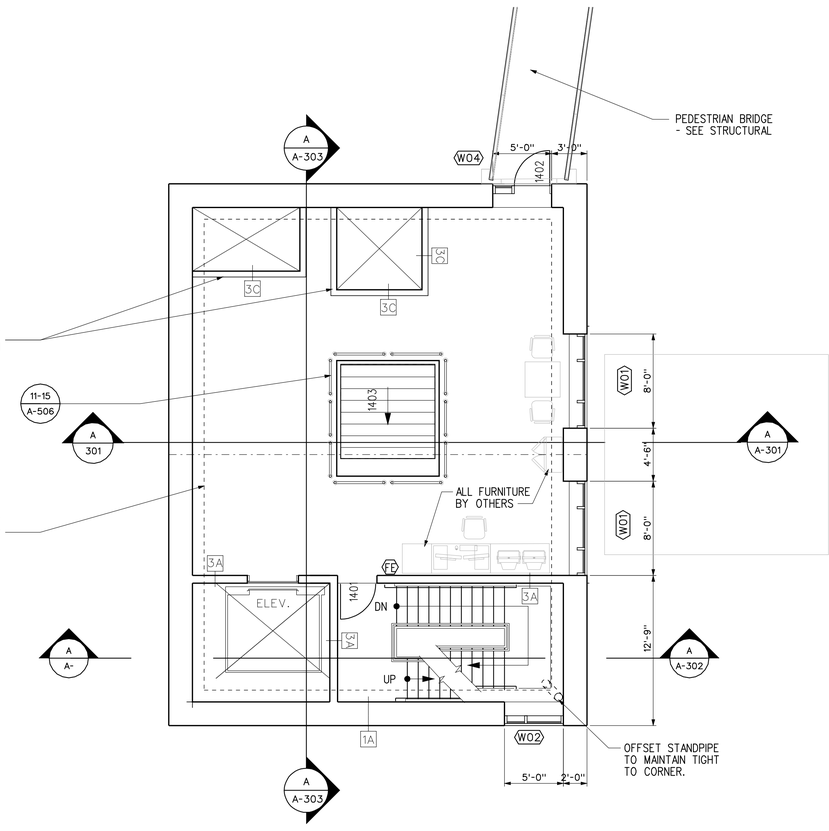

14TH FLOOR PLAN EL: 1228.00'

1/8"=1'-0"

3/8" = 1'-0" 5' 0 5' 10'

US Army Corps of Engineers
Seattle District

Symbol	Description	Date	Appr.	Symbol
		/ /		

Designed by: TOLMAN/CHEN
Drawn by: HOPKINS
Checked by: CHEN
Date: 16 MAR 06
File # E-56-14-19
Rev.

U.S.ARMY ENGINEER DISTRICT,SEATTLE
CORPS OF ENGINEERS
SEATTLE, WASHINGTON
Prepared by:

ADDITIONAL WATER STORAGE PROJECT
HOWARD HANSON DAM
13TH-14TH FLOOR PLANS
EL 1216.00' - 1228.00'
GREEN RIVER WASHINGTON

Plate number:
A-112
Sheet of

DATE AND TIME PLOTTED: 07-AUG-2008 12:51
DESIGN FILE: F:\ACCDESIGNS\HHAW\Architectural\HHAWA-112F12.DGN

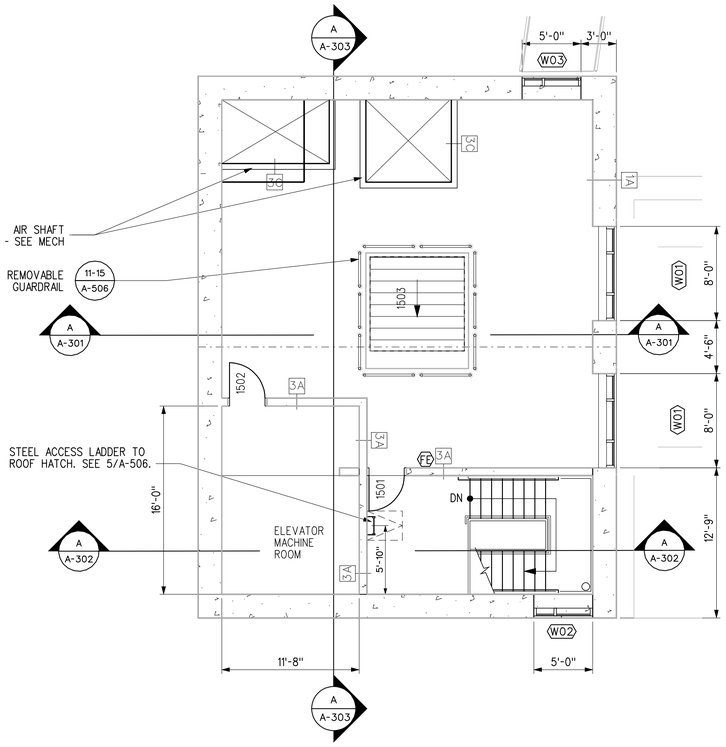

15TH FLOOR PLAN EL: 1245.00'

1/8"=1'-0"

3/16" = 1' - 0" 5' 0 5' 10'

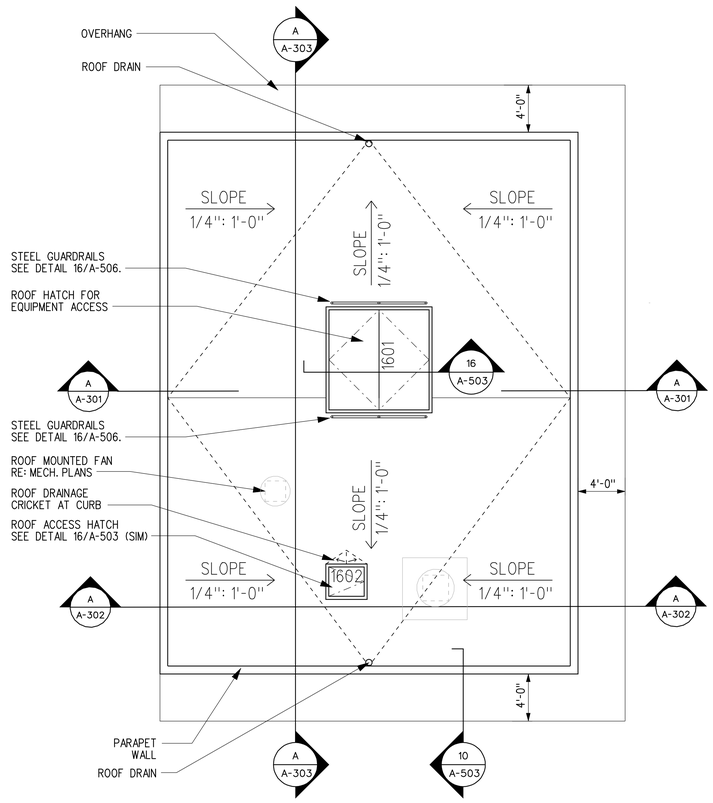

ROOF PLAN EL: 1257.00'

1/8"=1'-0"

3/16" = 1' - 0" 5' 0 5' 10'

US Army Corps of Engineers
Seattle District

Symbol	Description	Date	Appr.	Symbol	Description
		/ /			

U.S.ARMY ENGINEER DISTRICT,SEATTLE
CORPS OF ENGINEERS
SEATTLE, WASHINGTON

Prepared by:

Designed by: TOLMAN/CHEN
Drawn by: HOPKINS
Reviewed by: CHEN

Date: 16 MAR 06
File: E-56-14-19
Rev.

ADDITIONAL WATER STORAGE PROJECT
HOWARD HANSON DAM
GREEN RIVER WASHINGTON

15TH FLR-ROOF PLANS
EL. 1245.00' - 1257.00'

Plate number:
A-113
Sheet of

DATE AND TIME PLOTTED: 07-AUG-2008 12:51 DESIGN FILE: J:\AECDESIGNS\HHAW\Architectural\HHAWA-113F13.DGN

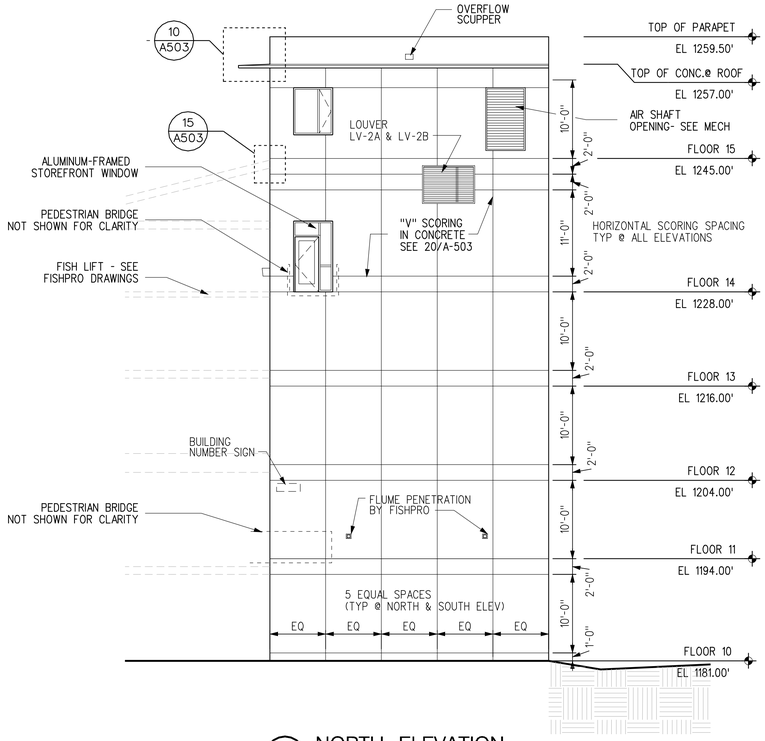

A NORTH ELEVATION
1/8"=1'-0" 0' 8' 16'

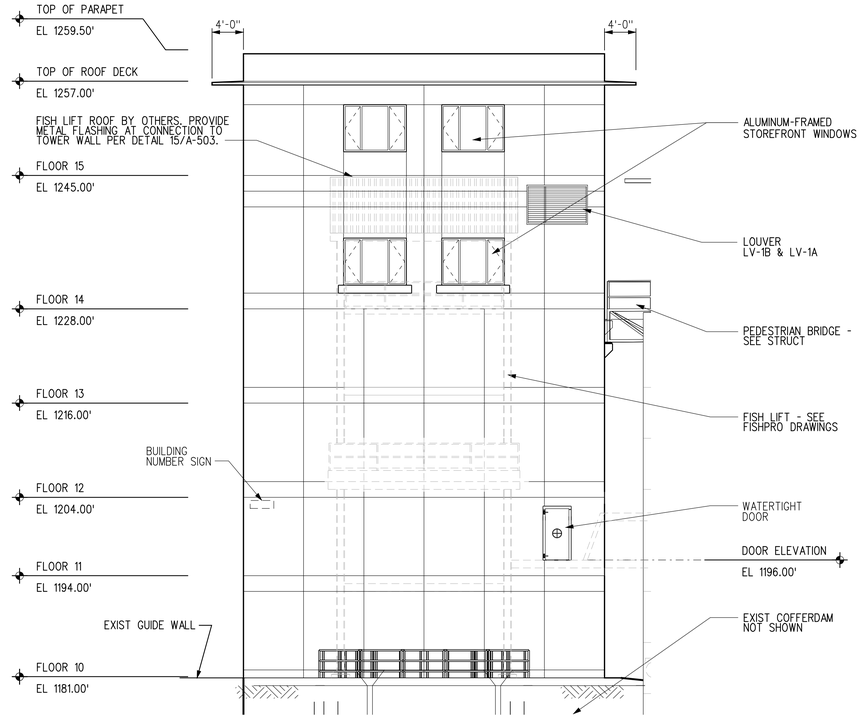

B EAST ELEVATION
1/8"=1'-0" 0' 8' 16'

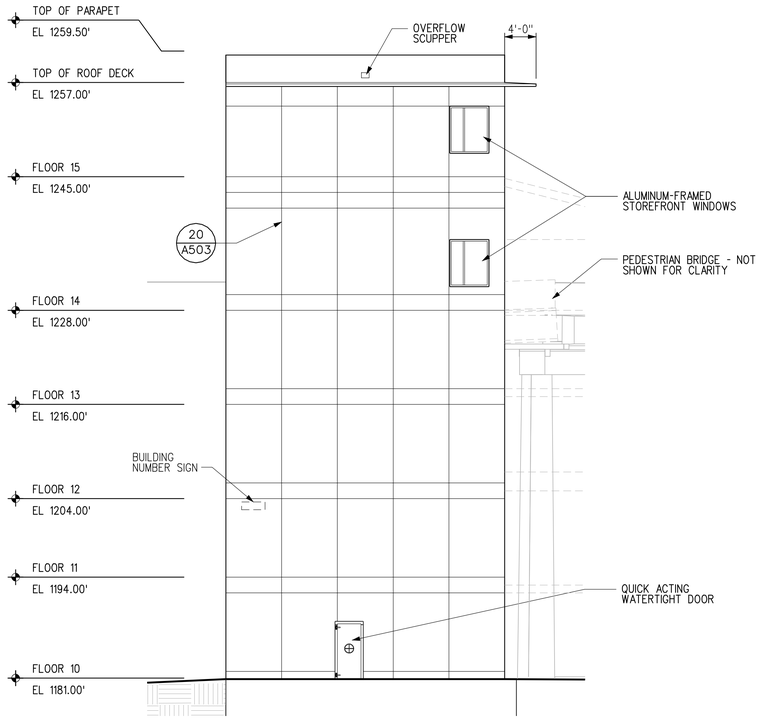

C SOUTH ELEVATION
1/8"=1'-0" 0' 8' 16'

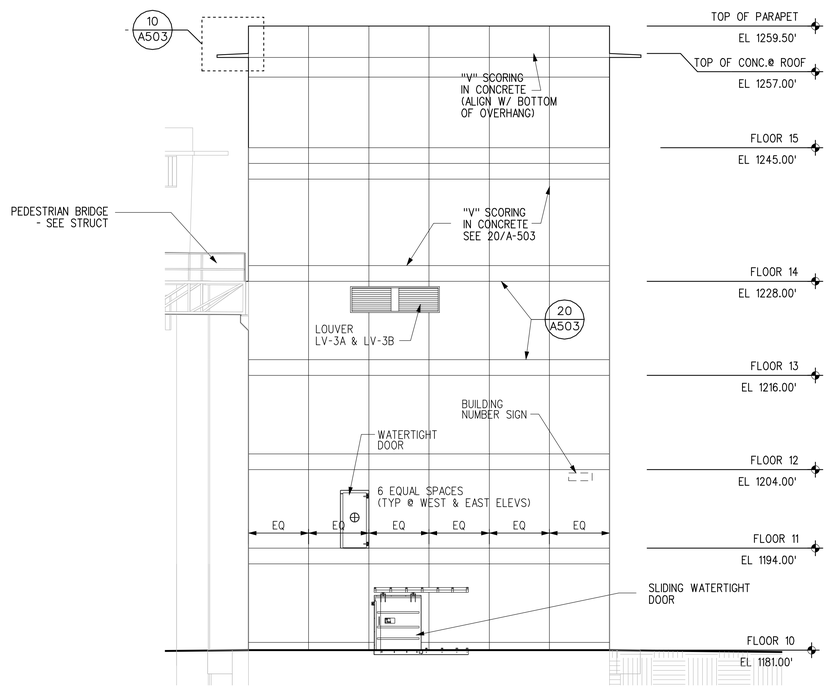

D WEST ELEVATION
1/8"=1'-0" 0' 8' 16'

US Army Corps of Engineers
Seattle District

Symbol	Description	Date	Appr.	Symbol	Description
		/ /			

Date: 16 MAR 06
File: E-56-14-19
Rev.

Designed by: TOLMAN/CHEN
Drawn by: TOLMAN
Checked by: CHEN

U.S.ARMY ENGINEER DISTRICT,SEATTLE
CORPS OF ENGINEERS
SEATTLE, WASHINGTON
Prepared by:

ADDITIONAL WATER STORAGE PROJECT
HOWARD HANSON DAM
GREEN RIVER WASHINGTON

EXTERIOR ELEVATIONS

Plate number:
A-201
Sheet of

DESIGN FILE: J:\AECDESIGNS\HHAW\Architectural\HHAWA-201EL.N.DGN
DATE AND TIME PLOTTED: 07-AUG-2008 12:52

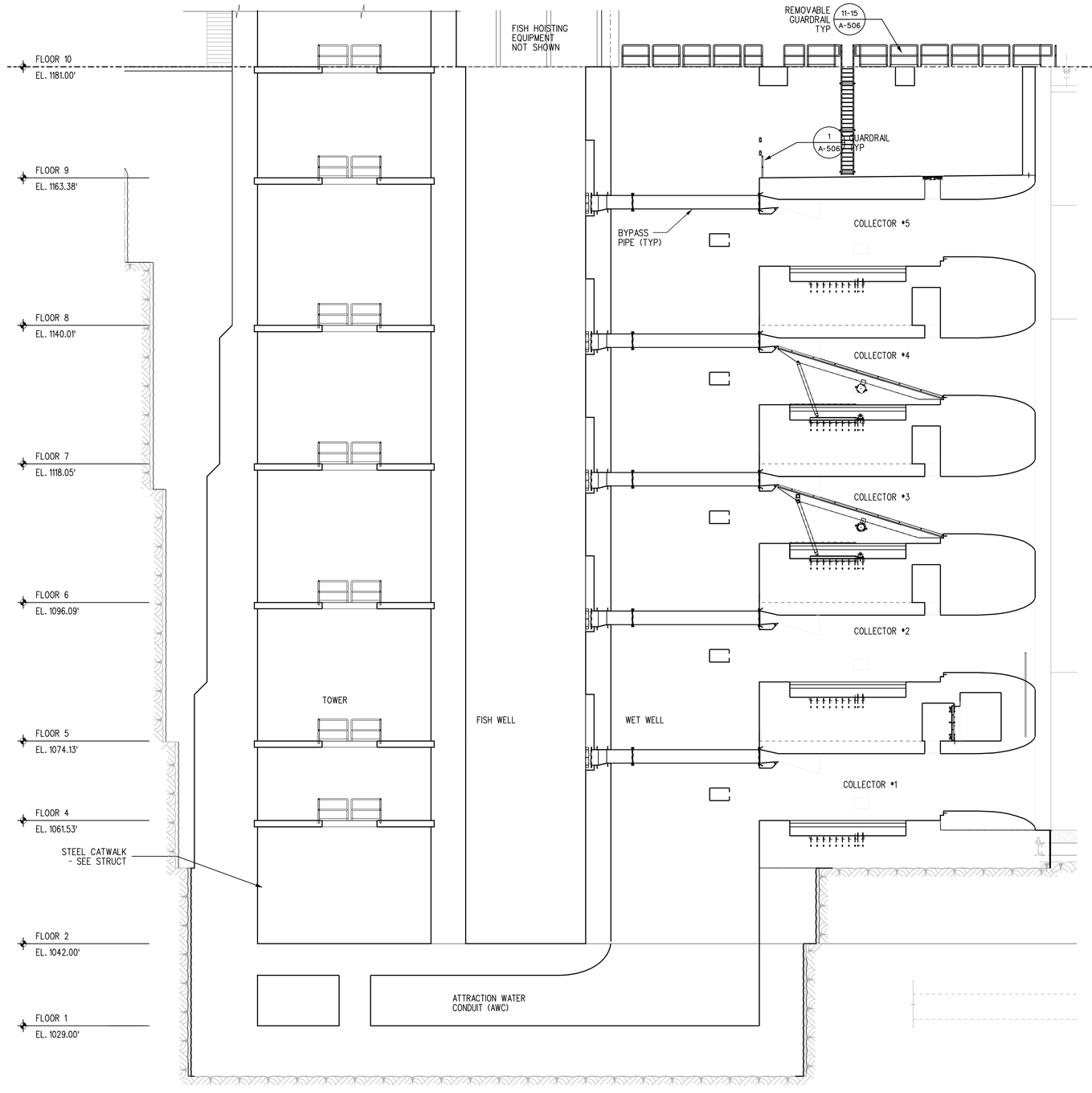

A CENTERLINE PROFILE SECTION
1/8"=1'-0"
0' 8' 16'

US Army Corps of Engineers
Seattle District

Symbol	Description	Appr.	Date
			/ /

Designed by: TOLMAN/CHEN
Drawn by: HOPKINS
Checked by: CHEN
Date: 16 MAR 06
File # E-56-14-19
Rev.

U.S.ARMY ENGINEER DISTRICT,SEATTLE
CORPS OF ENGINEERS
SEATTLE, WASHINGTON
Prepared by:

ADDITIONAL WATER STORAGE PROJECT
HOWARD HANSON DAM
GREEN RIVER WASHINGTON

CENTERLINE PROFILE SECTION

Plate number:
A-301
Sheet of

DESIGN FILE: J:\AECDESIGNS\HHAW\Architectural\HHAWA-301S01.DGN
DATE AND TIME PLOTTED: 07-AUG-2008 12:52

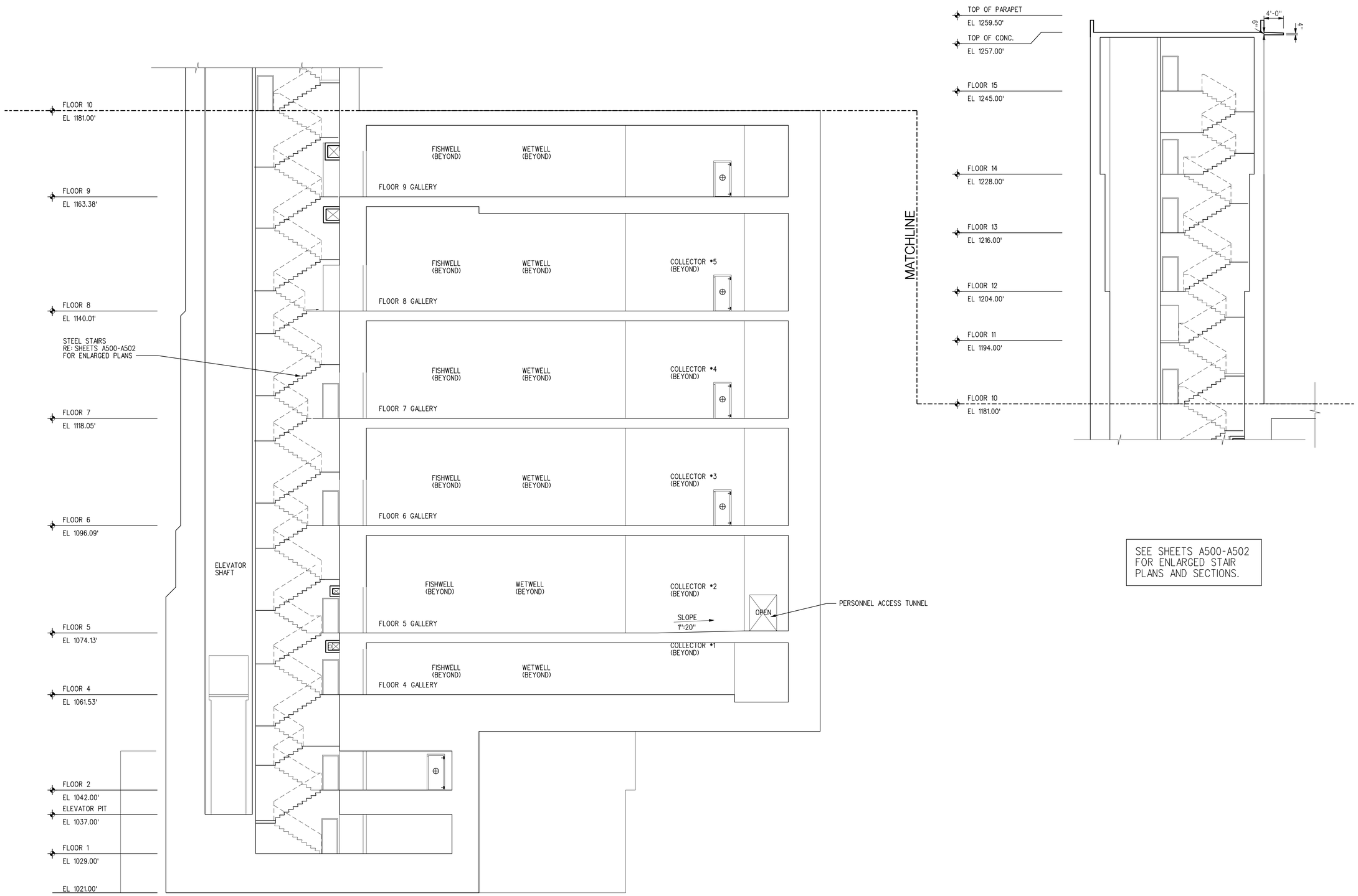

SEE SHEETS A500-A502 FOR ENLARGED STAIR PLANS AND SECTIONS.

A GALLERY PROFILE SECTION
1/8"=1'-0"

US Army Corps of Engineers
Seattle District

Symbol	Description	Date	Appr.	Symbol	Description
		/ /			

Designed by: TOLMAN/CHEN
Drawn by: HOPKINS
Checked by: CHEN
Date: 16 MAR 06
File #: E-56-14-19
Rev.

U.S.ARMY ENGINEER DISTRICT,SEATTLE
CORPS OF ENGINEERS
SEATTLE, WASHINGTON
Prepared by:

ADDITIONAL WATER STORAGE PROJECT
HOWARD HANSON DAM
GALLERY PROFILE SECTION
GREEN RIVER WASHINGTON

Plate number:
A-302
Sheet of

DATE AND TIME PLOTTED: 07-AUG-2008 12:53
DESIGN FILE: I:\AECDESIGNS\HHAW\Architectural\HHAWA-302S02.DGN

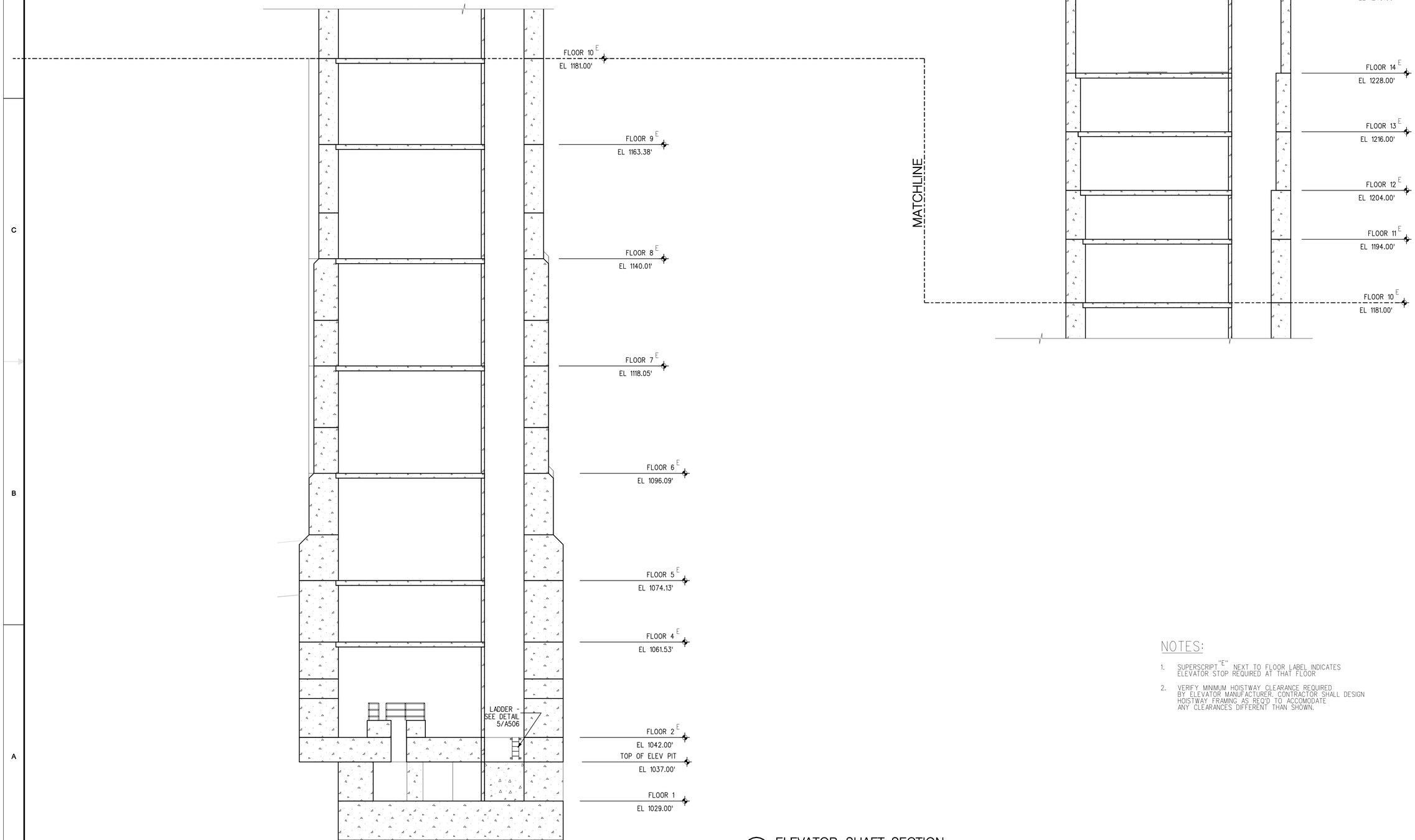

A ELEVATOR SHAFT SECTION
1/8"=1'-0"
0" 8" 16"

NOTES:

1. SUPERSCRIPT "E" NEXT TO FLOOR LABEL INDICATES ELEVATOR STOP REQUIRED AT THAT FLOOR
2. VERIFY MINIMUM HOISTWAY CLEARANCE REQUIRED BY ELEVATOR MANUFACTURER. CONTRACTOR SHALL DESIGN HOISTWAY FRAMING AS REQ'D TO ACCOMODATE ANY CLEARANCES DIFFERENT THAN SHOWN.

US Army Corps of Engineers
Seattle District

Symbol	Description	Date	Appr.	Symbol	Description
		/ /			

Designed by: TOLMAN/CHEN
Drawn by: TOLMAN
Checked by: CHEN
Date: 16 MAR 06
File: E-56-14-19
Rev.

U.S.ARMY ENGINEER DISTRICT,SEATTLE
CORPS OF ENGINEERS
SEATTLE, WASHINGTON
Prepared by:

ADDITIONAL WATER STORAGE PROJECT
HOWARD HANSON DAM
GREEN RIVER WASHINGTON

ELEVATOR SHAFT SECTION

Plate number:
A-303
Sheet of

DESIGN FILE: J:\AECDESIGNS\HHAW\Architectural\HHAWA-303S03.DGN
DATE AND TIME PLOTTED: 07-AUG-2008 12:53

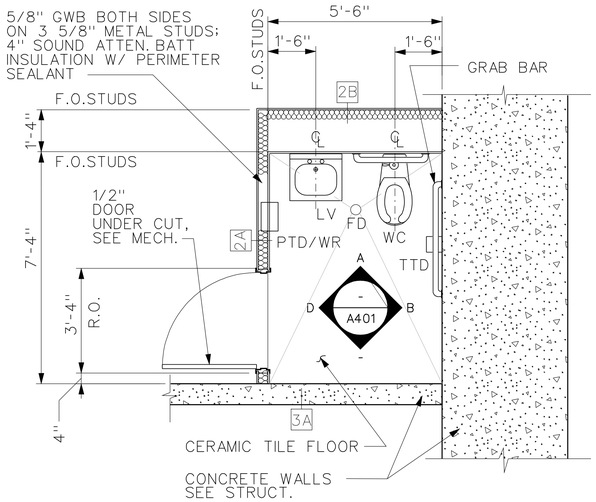

A ENLARGED TOILET PLAN @ 10TH FLOOR
1/2"=1'-0"

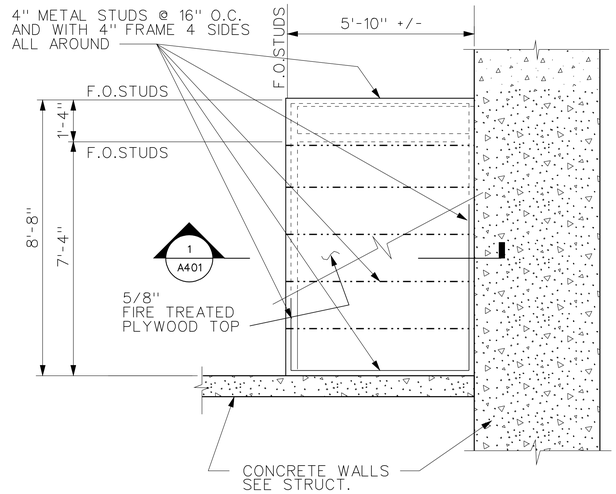

ENLARGED TOILET ROOM TOP PLAN
1/2"=1'-0"

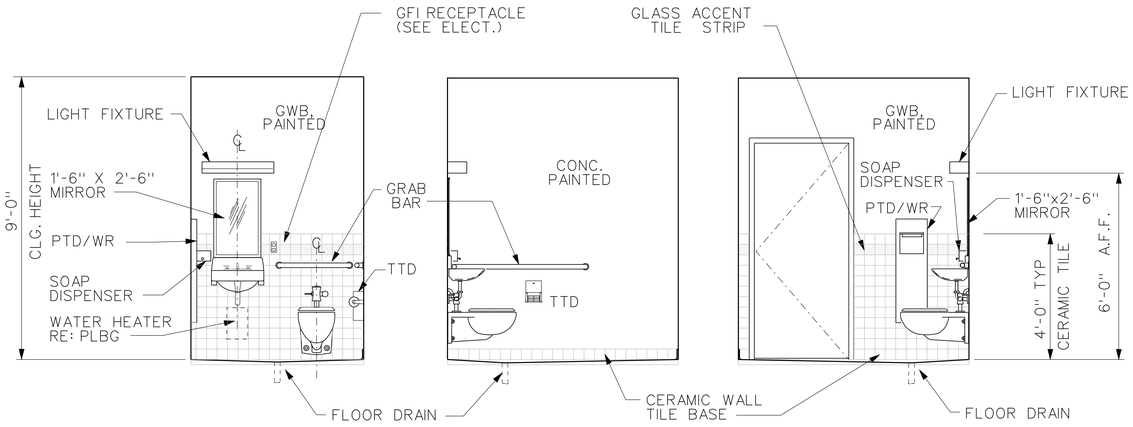

ELEV A

ELEV C: WALL FINISH SIMILAR TO ELEV B

ELEV B

ELEV D

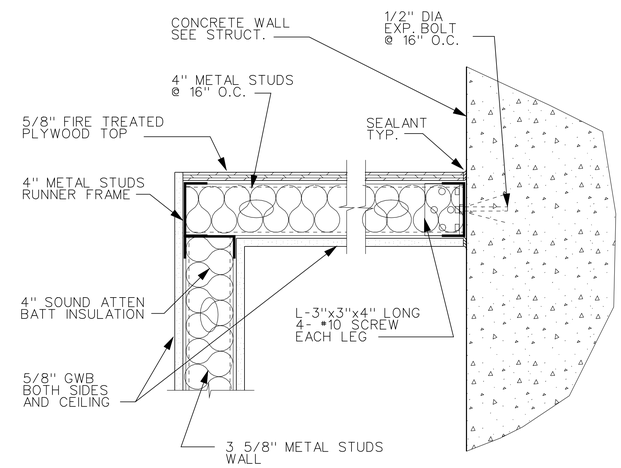

1 SECTION DETAIL
3"=1'-0"

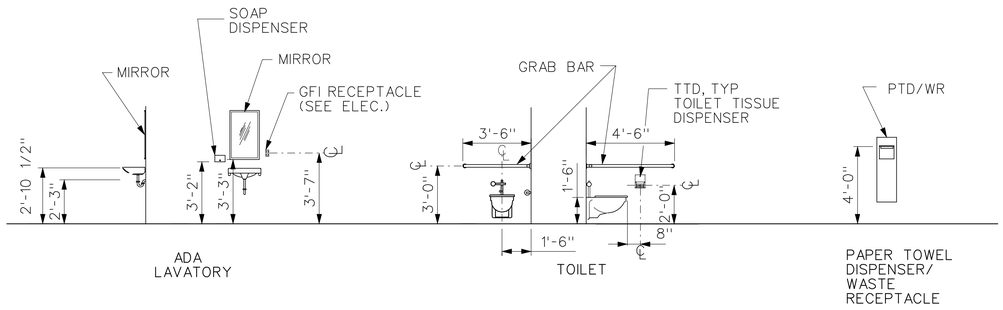

LAVATORY & ACCESSORIES

TOILET & ACCESSORIES

TYPICAL DIMENSIONS - FIXTURES AND ACCESSORIES

3" = 1'-0" 1" 0 3" 6" 9" 12"

½" = 1'-0" 12"6" 0 1' 2' 3' 4' 5'

US Army Corps of Engineers
Seattle District

Symbol	Description	Date	Appr.	Symbol	Description
		/ /			

Designed by: TOLMAN/CHEN
Drawn by: HOPKINS
Checked by: CHEN
Date: 16 MAR 06
File #: E-56-14-19
Rev.

U.S.ARMY ENGINEER DISTRICT,SEATTLE
CORPS OF ENGINEERS
SEATTLE, WASHINGTON
Prepared by:

ADDITIONAL WATER STORAGE PROJECT
HOWARD HANSON DAM
GREEN RIVER WASHINGTON

ENLARGED FLOOR PLAN & INTERIOR ELEVATIONS

Plate number: A-401
Sheet of

DATE AND TIME PLOTTED: 07-AUG-2008 12:53
DESIGN FILE: I:\AECDESIGNS\HHAW\Architectural\HHAWA-401L01.DGN

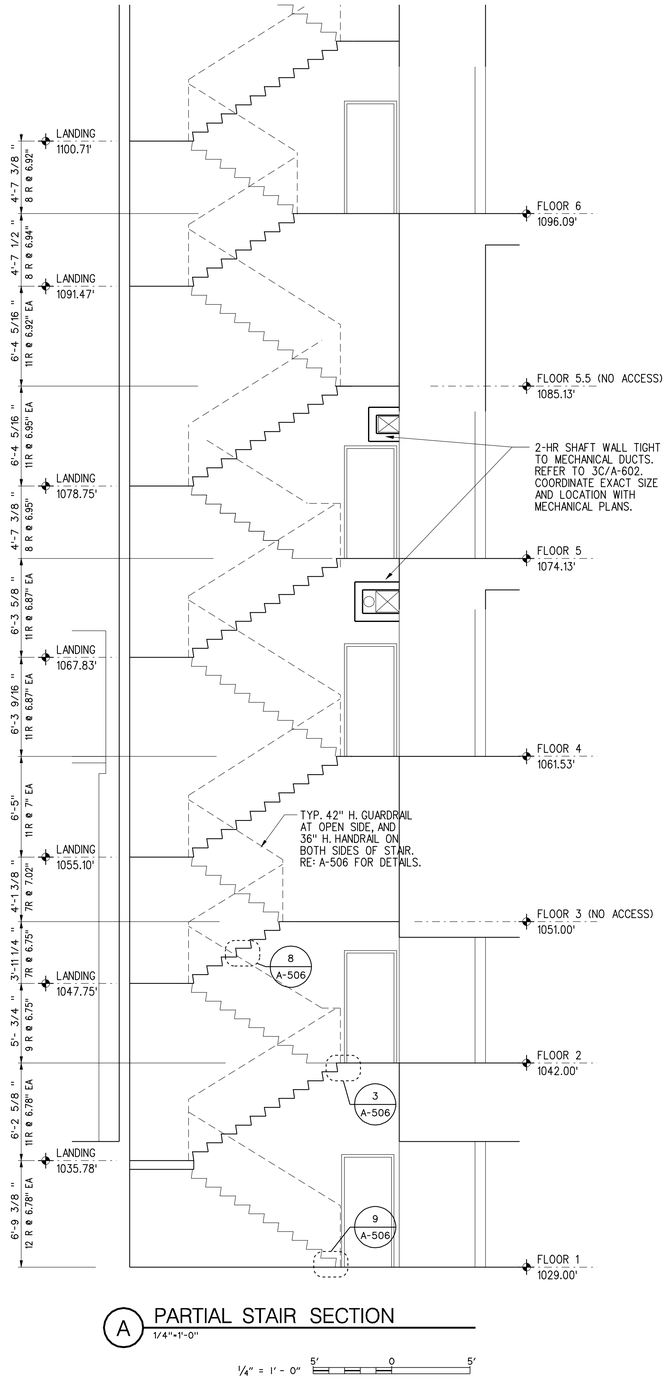

A PARTIAL STAIR SECTION
1/4"=1'-0"

1/4" = 1' - 0" 5' 0 5'

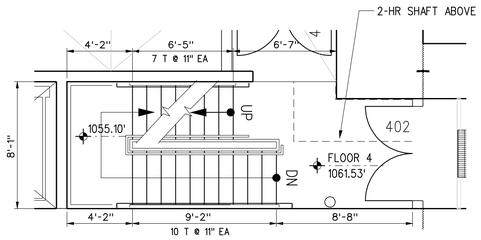

4 FLOOR 4 STAIR PLAN
1/4"=1'-0" 0' 8' 16'

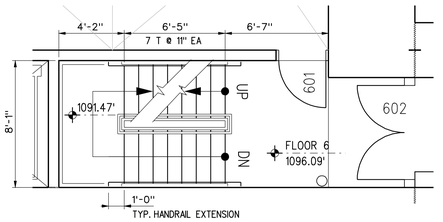

6 FLOOR 6 STAIR PLAN
1/4"=1'-0" 0' 8' 16'

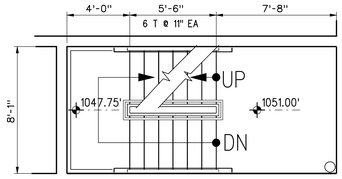

3 FLOOR 3 STAIR PLAN (NO ACCESS)
1/4"=1'-0" 0' 8' 16'

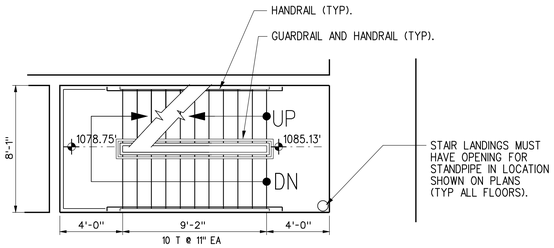

5.5 FLOOR 5.5 STAIR PLAN (NO ACCESS)
1/4"=1'-0" 0' 8' 16'

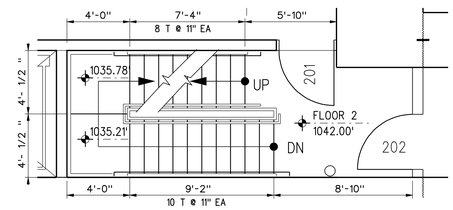

2 FLOOR 2 STAIR PLAN
1/4"=1'-0" 0' 8' 16'

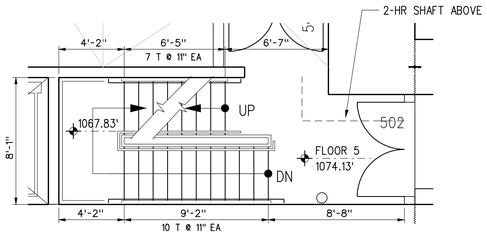

5 FLOOR 5 STAIR PLAN
1/4"=1'-0" 0' 8' 16'

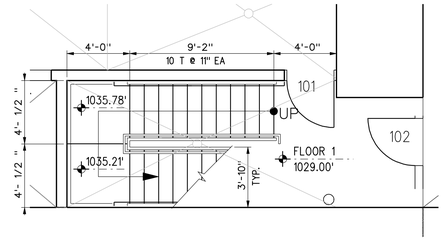

1 FLOOR 1 STAIR PLAN
1/4"=1'-0" 0' 8' 16'

US Army Corps of Engineers
Seattle District

Symbol	Description	Appr.	Date
			/ /

Designed by: TOLMAN/CHEN
Drawn by: HOPKINS
Checked by: CHEN
Date: 16 MAR 06
File #: E-56-14-19
Rev.

U.S.ARMY ENGINEER DISTRICT,SEATTLE
CORPS OF ENGINEERS
SEATTLE, WASHINGTON
Prepared by:

ADDITIONAL WATER STORAGE PROJECT
HOWARD HANSON DAM
GREEN RIVER WASHINGTON

STAIR PLANS & SECTION

Plate number:
A-500
Sheet of

DATE AND TIME PLOTTED: 07-AUG-2008 12:54
DESIGN FILE: J:\AECDESIGNS\HHAW\Architectural\HHAWA-500D00.DGN

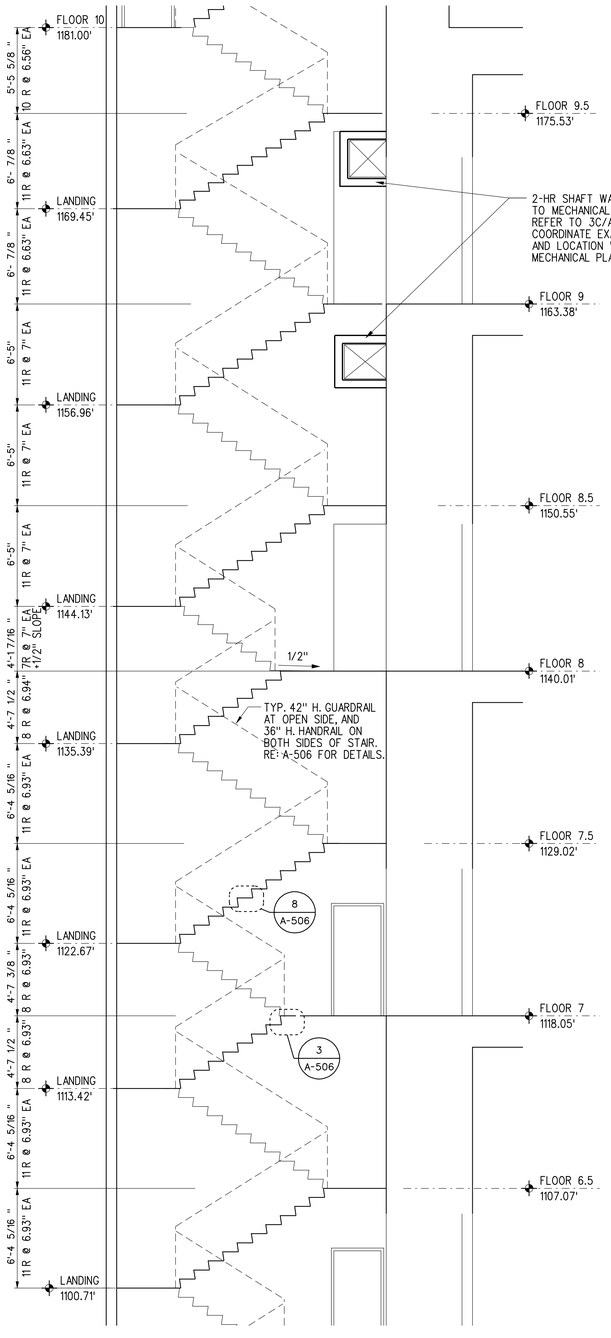

A PARTIAL STAIR SECTION
1/4"=1'-0"

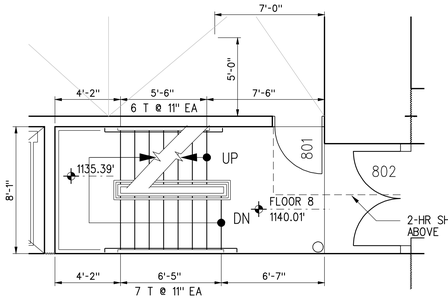

8 FLOOR 8 STAIR PLAN
1/4"=1'-0"

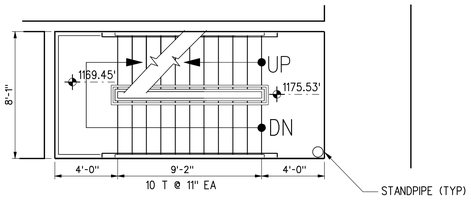

9.5 FLOOR 9.5 STAIR PLAN
1/4"=1'-0"

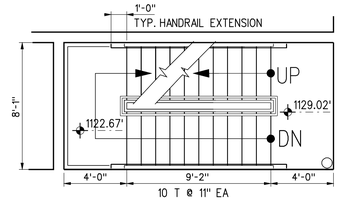

7.5 FLOOR 7.5 STAIR PLAN (NO ACCESS)
1/4"=1'-0"

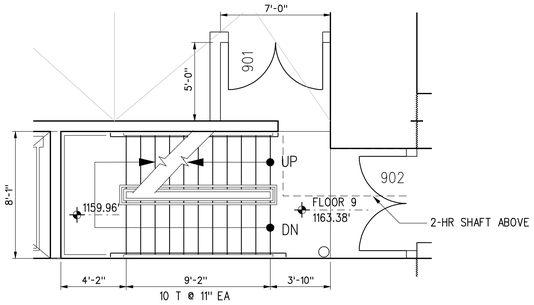

9 FLOOR 9 STAIR PLAN
1/4"=1'-0"

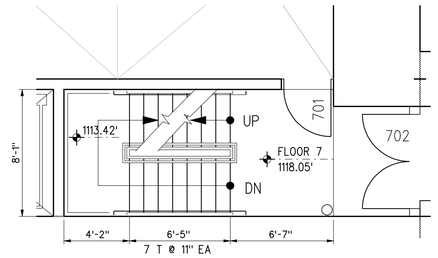

7 FLOOR 7 STAIR PLAN
1/4"=1'-0"

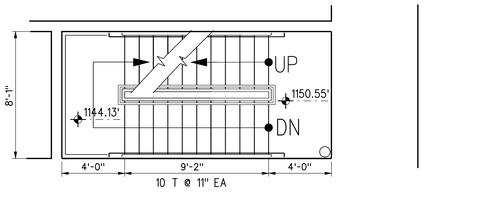

8.5 FLOOR 8.5 STAIR PLAN (NO ACCESS)
1/4"=1'-0"

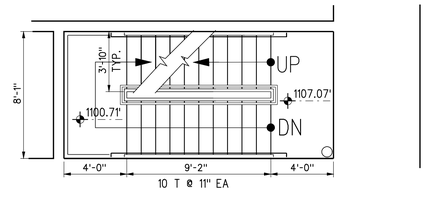

6.5 FLOOR 6.5 STAIR PLAN (NO ACCESS)
1/4"=1'-0"

US Army Corps of Engineers
Seattle District

Symbol	Description
Appr.	
Date	/ /
Symbol	Description

U.S.ARMY ENGINEER DISTRICT,SEATTLE
CORPS OF ENGINEERS
SEATTLE, WASHINGTON

Designed by: TOLMAN/CHEN
Drawn by: HOPKINS
Checked by: CHEN
Prepared by:

Date: 16 MAR 06
File # E-56-14-19
Rev.

ADDITIONAL WATER STORAGE PROJECT
HOWARD HANSON DAM
STAIR PLANS & SECTION
GREEN RIVER WASHINGTON

Plate number: A-501
Sheet of

DATE AND TIME PLOTTED: 07-AUG-2008 12:54
DESIGN FILE: J:\ACCDESIGNS\HHAW\Architectural\HHAWA-501D01.DGN

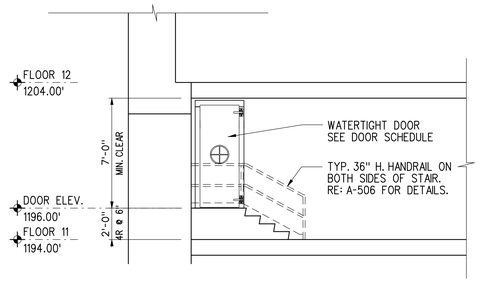

B PARTIAL STAIR SECTION
1/4"=1'-0"

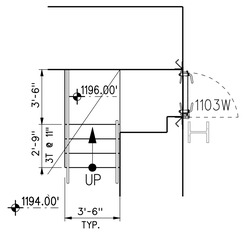

11N FLR 11 NORTH STAIR
1/4"=1'-0"

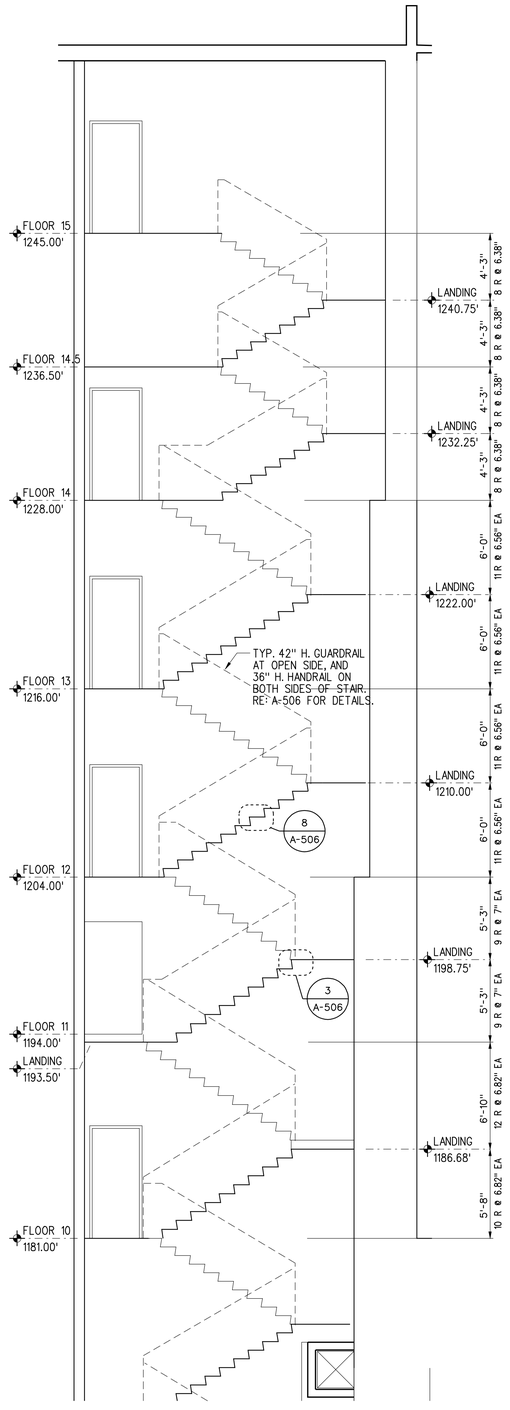

A PARTIAL STAIR SECTION
1/4"=1'-0"

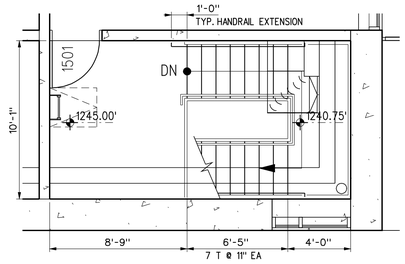

15 FLOOR 15 STAIR PLAN
1/4"=1'-0"

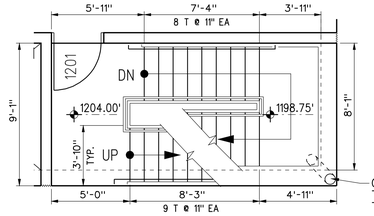

12 FLOOR 12 STAIR PLAN
1/4"=1'-0"

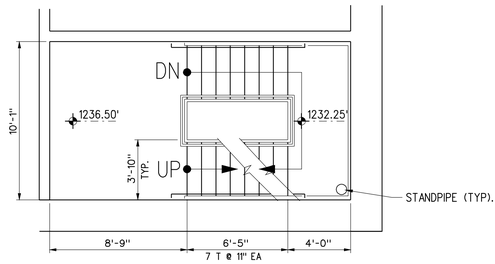

14.5 FLOOR 14.5 STAIR PLAN (NO ACCESS)
1/4"=1'-0"
10 T @ 11" EA

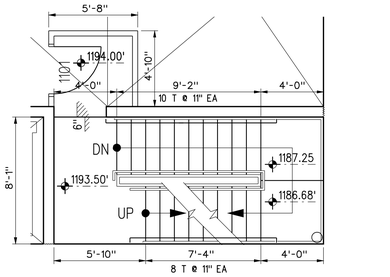

11 FLOOR 11 STAIR PLAN
1/4"=1'-0"

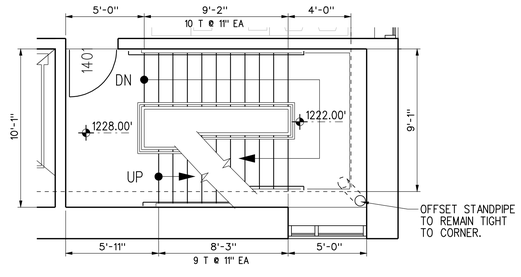

14 FLOOR 14 STAIR PLAN
1/4"=1'-0"

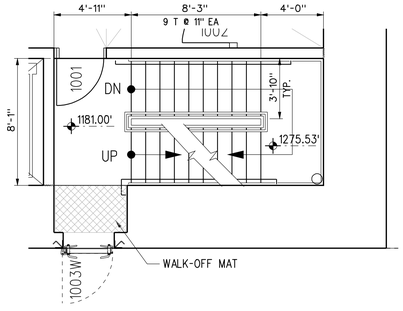

10 FLOOR 10 STAIR PLAN
1/4"=1'-0"

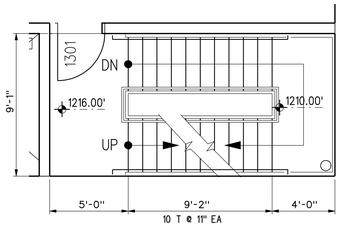

13 FLOOR 13 STAIR PLAN
1/4"=1'-0"

US Army Corps of Engineers
Seattle District

Description	Symbol	Appr.	Date
			/ /

U.S.ARMY ENGINEER DISTRICT,SEATTLE
CORPS OF ENGINEERS
SEATTLE, WASHINGTON
Prepared by:

Designed by: TOLMAN/CHEN
Drawn by: HOPKINS
Checked by: CHEN

Date: 16 MAR 06
File: E-56-14-19
Rev.

ADDITIONAL WATER STORAGE PROJECT
HOWARD HANSON DAM
GREEN RIVER WASHINGTON

STAIR PLANS & SECTION

Plate number: A-502
Sheet of

DATE AND TIME PLOTTED: 07-AUG-2008 12:55
DESIGN FILE: I:\AECDESIGNS\HHAW\Architectural\HHAWA-502D02.DGN

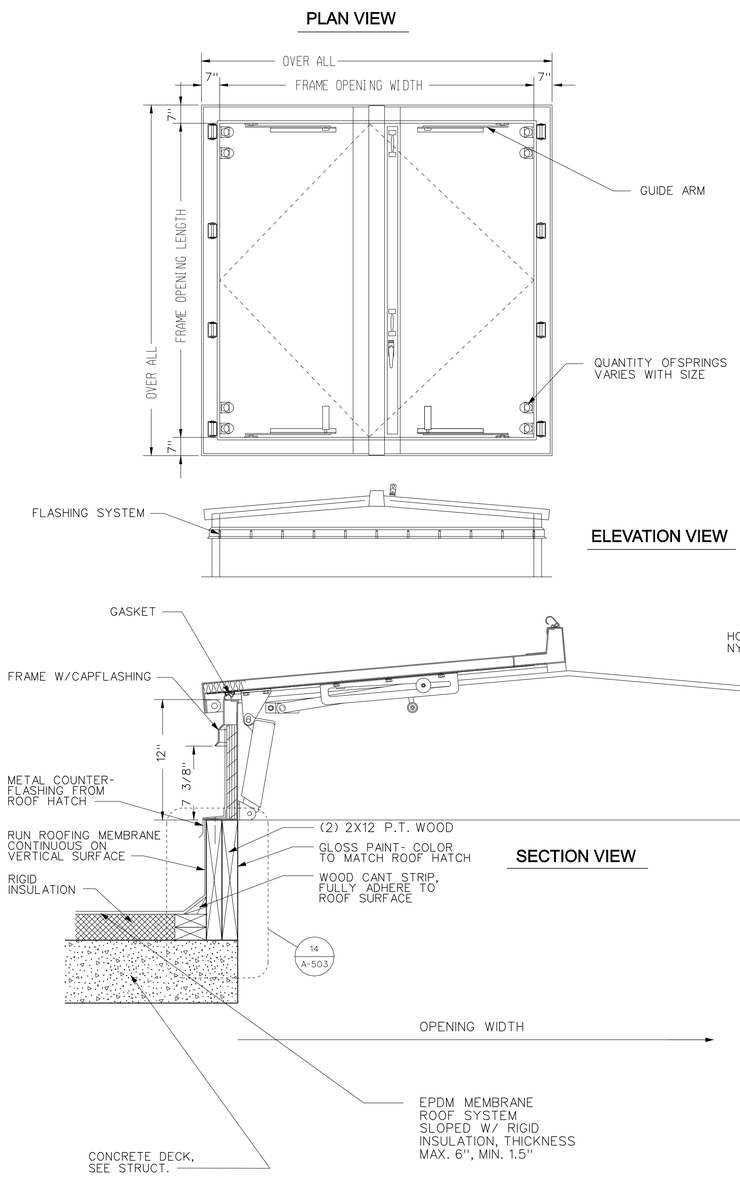

16 ROOF ACCESS HATCH DETAIL / SECTION
1"=1'-0"

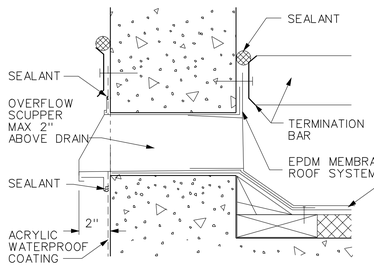

3 SCUPPER DETAIL
3"=1'-0"

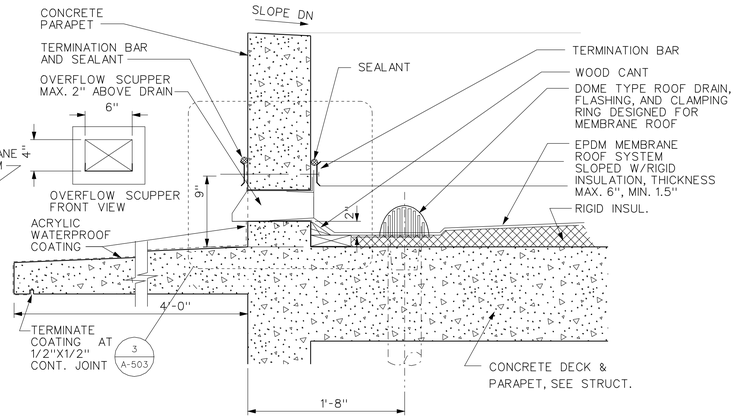

10 ROOF DRAIN / OVERFLOW
1 1/2"=1'-0"

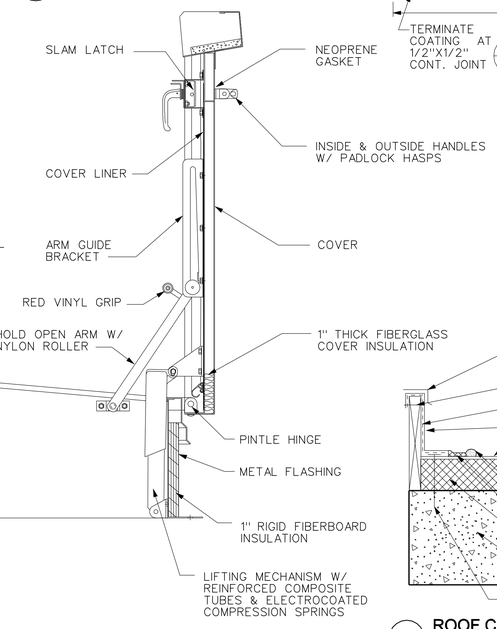

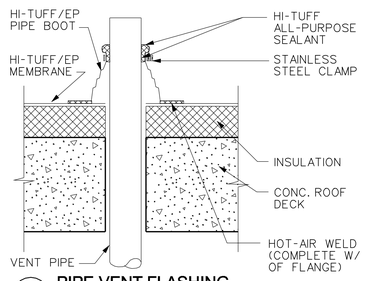

18 PIPE VENT FLASHING
1 1/2"=1'-0"

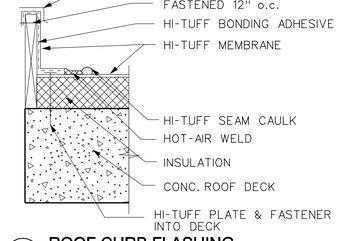

14 ROOF CURB FLASHING
1 1/2"=1'-0"

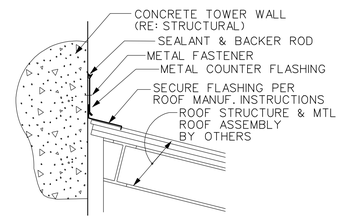

15 ROOF CONNECTION AT FISH LIFT
1"=1'-0"

NOTE:
1. MEMBRANE AND PIPE BOOT WELDING AREA MUST BE WIPED/SCRUBBED WITH HI-TUFF/EP SEAM CLEANER AND A SCRUB PAD PRIOR TO HOT-AIR WELDING

2. INSULATION AND FIELD MEMBRANE MUST BE CUT TIGHTLY AROUND THE PIPE BASE.

3. ALL FLASHING MUST BE A MINIMUM OF 6" HIGH WHENEVER POSSIBLE AND MUST BE ABOVE ROOF FLOOD LEVEL.

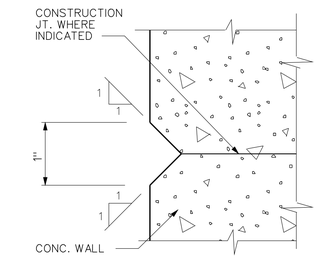

20 V-SCORING
FULL SCALE 1"=1"

US Army Corps of Engineers
Seattle District

Symbol	Description	Date
		/ /

Designed by: TOLMAN/ CHOE/CHEN	Date: 16 MAR 06
Drawn by: CHOE	File: E-56-14-19
Checked by: CHEN	Rev.

U.S.ARMY ENGINEER DISTRICT,SEATTLE CORPS OF ENGINEERS
SEATTLE, WASHINGTON
Prepared by:

ADDITIONAL WATER STORAGE PROJECT
HOWARD HANSON DAM
GREEN RIVER WASHINGTON

EXTERIOR & ROOF DETAILS

Plate number:
A-503
Sheet of

DATE AND TIME PLOTTED: 07-AUG-2008 12:55
DESIGN FILE: J:\AECDESIGNS\HHAW\Architectural\HHAWA-503D03.DGN

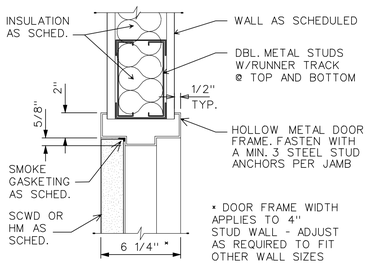

1 INTERIOR DOOR HEAD
3"=1'-0"

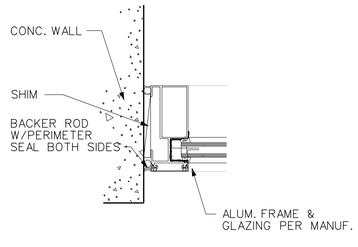

2 TYP. WINDOW JAMB
3"=1'-0"

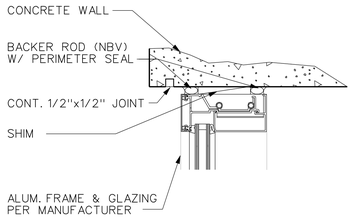

3 TYP. WINDOW HEAD
3"=1'-0"

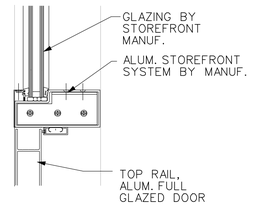

4 DOOR HEAD @ 1228'
3"=1'-0"

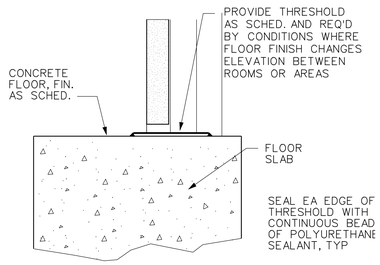

5 INTERIOR DOOR THRESHOLD
3"=1'-0"

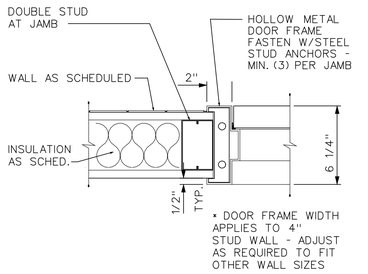

6 INTERIOR DOOR JAMB
3"=1'-0"

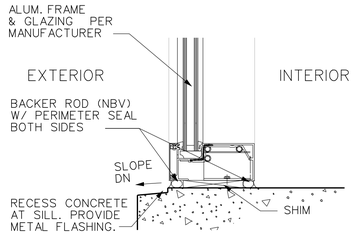

7 TYP. WINDOW SILL
3"=1'-0"

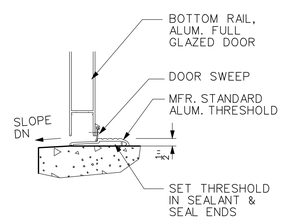

8 DOOR SILL AT 1228'
3"=1'-0"

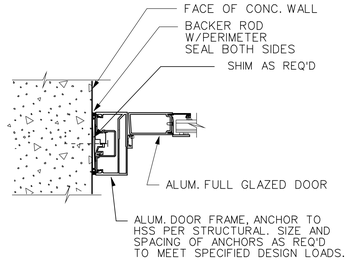

9 EXT. ALUM. DOOR JAMB / HEAD-SIM
3" = 1'-0"

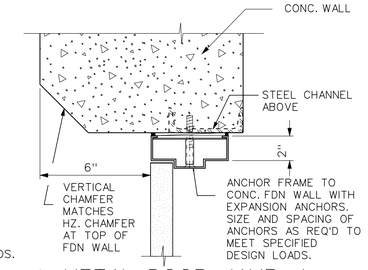

10 METAL DOOR JAMB / HEAD-SIM
3"=1'-0"

11

12

13

14

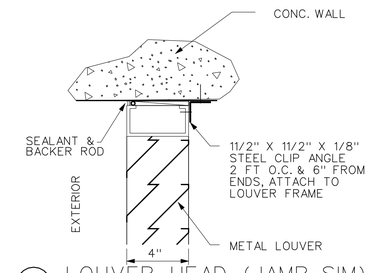

15 LOUVER HEAD (JAMB-SIM)
3"=1'-0"

16

17

18

19

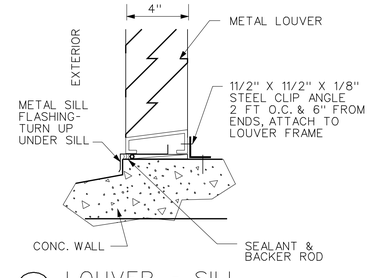

20 LOUVER - SILL
3"=1'-0"

US Army Corps of Engineers
Seattle District

Symbol	Description	Date	Appr.	Symbol
		/ /		

Designed by: TOLMAN/CHEN
Drawn by: CHOE
Checked by: CHEN
Date: 16 MAR 06
File: E-56-14-19
Rev.

U.S.ARMY ENGINEER DISTRICT,SEATTLE
CORPS OF ENGINEERS
SEATTLE, WASHINGTON
Prepared by:

ADDITIONAL WATER STORAGE PROJECT
HOWARD HANSON DAM
DOOR & WINDOW DETAILS I
GREEN RIVER WASHINGTON

Plate number:
A-504
Sheet of

DATE AND TIME PLOTTED: 07-AUG-2008 12:55
DESIGN FILE: J:\AECDESIGNS\HHAW\Architectural\HHAWA-504D04.DGN

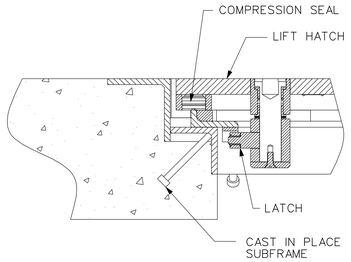

1 SECTION DETAIL
3"=1'-0"

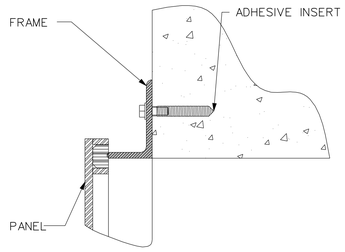

2 WATERTIGHT DOOR-HEAD
3"=1'-0"
A-A

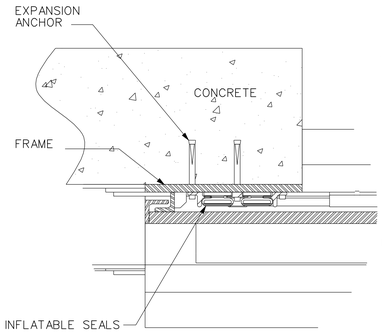

3 WATERTIGHT SLIDING DOOR-JAMB A
3"=1'-0"
A-A

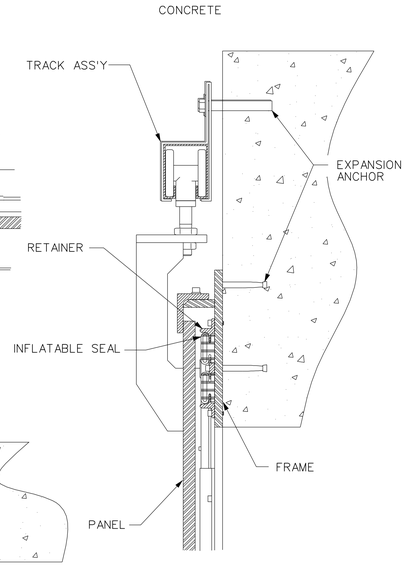

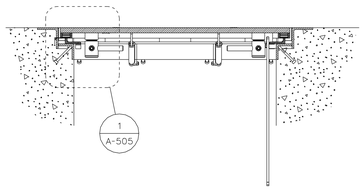

6 WATERTIGHT HATCH SECTION
1"=1'-0"

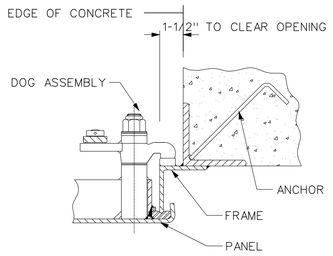

7 WATERTIGHT DOOR-JAMB
3"=1'-0"
C-C

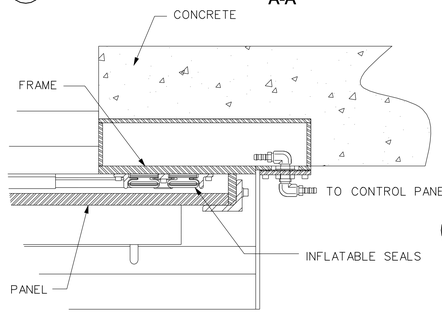

9 WATERTIGHT SLIDING DOOR-HEAD
3"=1'-0"
C-C

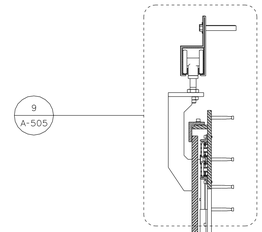

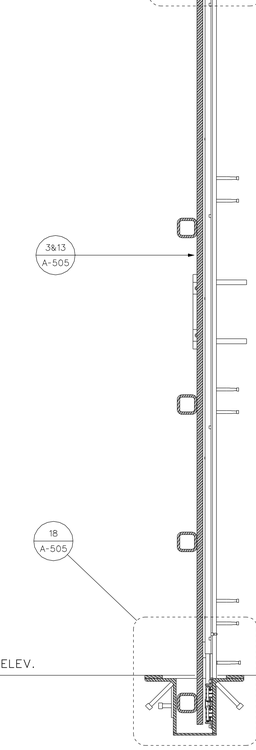

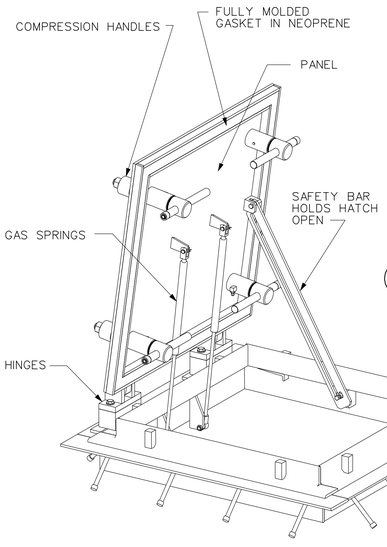

16 WATERTIGHT HATCH VIEW
1 1/2"=1'-0"

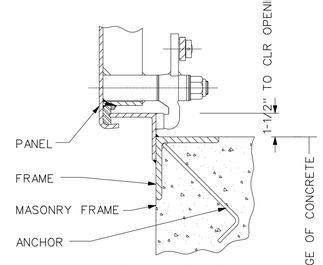

12 WATERTIGHT DOOR-SILL
3"=1'-0"
B-B

13 WATERTIGHT SLIDING DOOR-JAMB B
3"=1'-0"
B-B

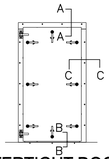

13 WATERTIGHT DOOR ELEV. VIEW
3"=1'-0"

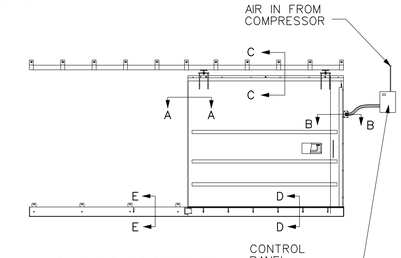

14 SLIDING DOOR ELEV.
1/4"=1'-0"

15 WATERTIGHT SLIDING DOOR SECTION
1 1/2"=1'-0"

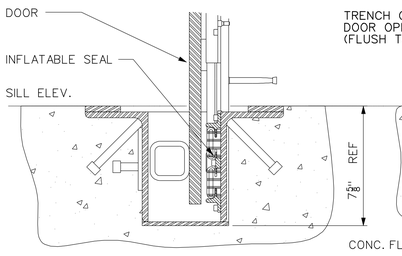

18 WATERTIGHT SLIDING DOOR-SILL
3"=1'-0"
SECTION D-D

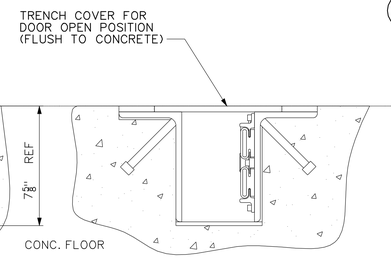

19 WATERTIGHT SLIDING DOOR-SILL
3"=1'-0"
SECTION D-D SHOWN W/TRENCH COVER

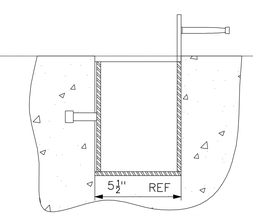

20 WATERTIGHT SLIDING DOOR-SILL
3"=1'-0"
SECTION E - E

ALL WATERTIGHT DOOR/HATCH INSTALLATION DETAILS AND ROUGH OPENING SIZES MUST BE VERIFIED WITH MANUFACTURER AND INSTALLED PER MANUFACTURER'S SPECIFICATIONS.

US Army Corps of Engineers
Seattle District

Symbol	Description	Date	Appr.	Symbol	Description
		/ /			

Designed by: TOLMAN/ CHOE/CHEN
Drawn by: CHOE
Checked by: CHEN
Date: 16 MAR 06
File: E-56-14-19
Rev.

U.S.ARMY ENGINEER DISTRICT SEATTLE
CORPS OF ENGINEERS
SEATTLE, WASHINGTON
Prepared by:

ADDITIONAL WATER STORAGE PROJECT
HOWARD HANSON DAM
GREEN RIVER WASHINGTON

DOOR & WINDOW DETAILS II

Plate number: A-505
Sheet of

DESIGN FILE: J:\ACEDESIGNS\HHAW\Architectural\HHAWA-505D05.DGN
DATE AND TIME PLOTTED: 07-AUG-2008 12:56

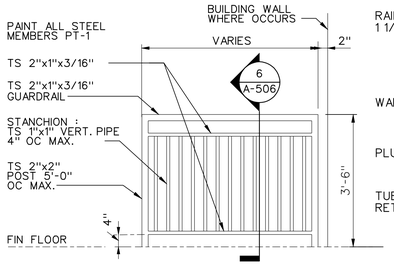

1 TYP. GUARDRAIL
N.T.S.

DETAIL =

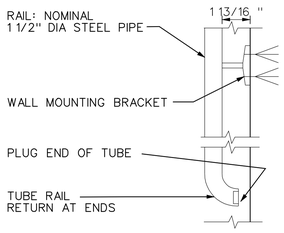

2 HANDRAIL RETURN
3"=1'-0"

05520-01

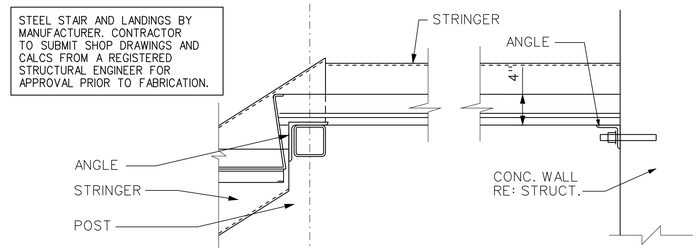

3 STAIR AND LANDING DETAIL
1 1/2"=1'-0"

DETAIL =

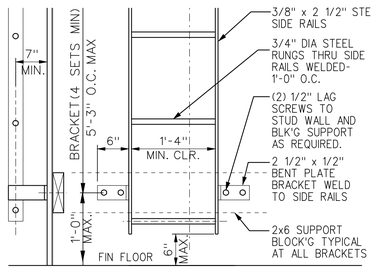

5 STL. ACCESS LADDER
1"=1'-0"

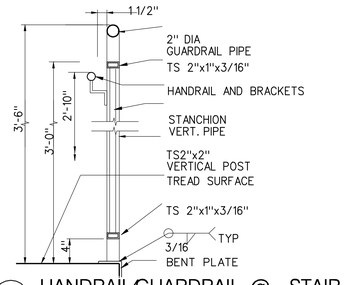

6 HANDRAIL/GUARDRAIL @ STAIR
1 1/2"=1'-0"

DETAIL =

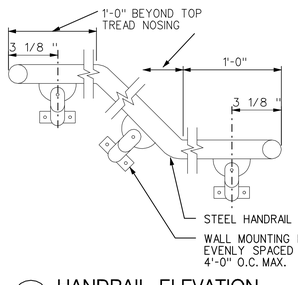

7 HANDRAIL ELEVATION
3"=1'-0"

05520-02

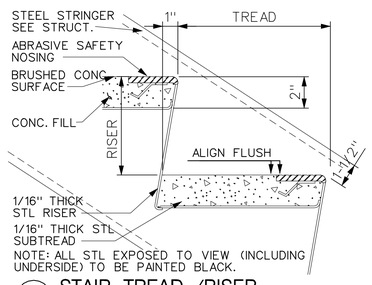

8 STAIR TREAD /RISER
3"=1'-0"

05510-06

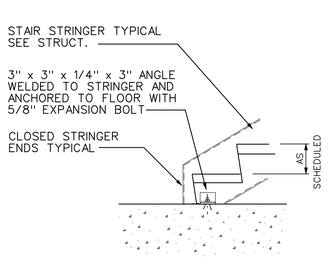

9 STAIR SECTION AT 1st FLOOR
1"=1'-0"

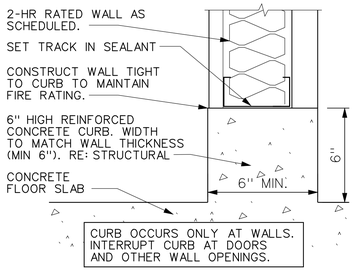

10 RATED WALL CURB DETAIL
3"=1'-0"

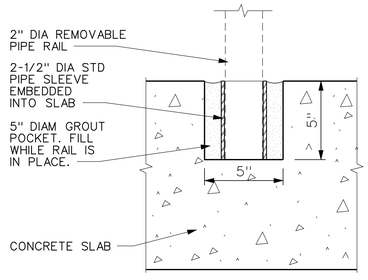

11 REMOVABLE POST BASE DETAIL
3"=1'-0"

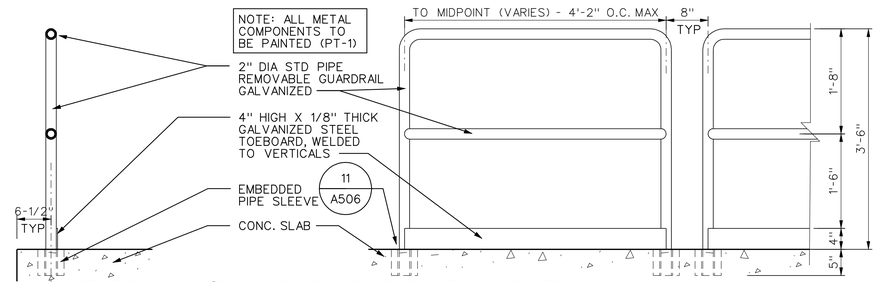

12 REMOVABLE GUARDRAIL SECTION
1"=1'-0"

13 REMOVABLE GUARDRAIL ELEVATION (TYP)
1"=1'-0"

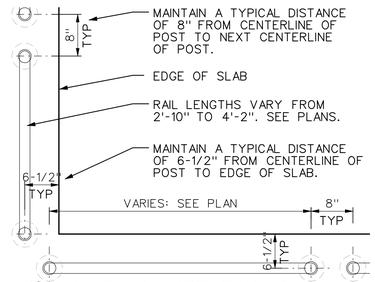

15 REMOVABLE POST SPACING
1"=1'-0"

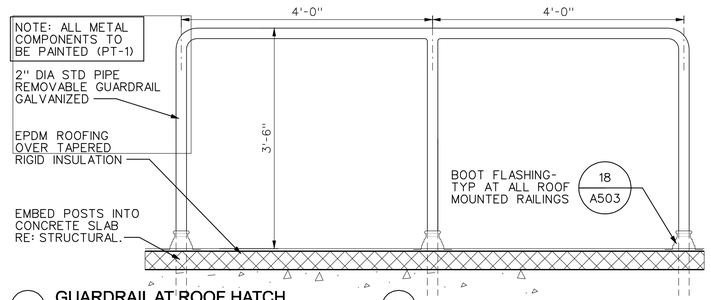

16 GUARDRAIL AT ROOF HATCH
1"=1'-0"

GENERAL NOTES:

1.

4" 2" 0 4"
SCALE: 3" = 1'-0"

8" 4" 0 8"
SCALE: 1 1/2" = 1'-0"

1' 6" 0 1'
SCALE: 1" = 1'-0"

Ø1 - Ø1

US Army Corps of Engineers
Seattle District

Symbol	Description	Date
		/ /

U.S.ARMY ENGINEER DISTRICT, SEATTLE
CORPS OF ENGINEERS
SEATTLE, WASHINGTON
Prepared by:

Designed by: TOLMAN/CHEN
Drawn by: TOLMAN
Checked by: CHEN
Date: 16 MAR 06
File: E-56-14-19
Rev.

ADDITIONAL WATER STORAGE PROJECT
HOWARD HANSON DAM
GREEN RIVER WASHINGTON

INTERIOR DETAILS

Plate number:
A-506
Sheet of

DESIGN FILE: I:\AECDESIGNS\HHAW\Architectural\HHAWA-506D06.DGN
DATE AND TIME PLOTTED: 07-AUG-2008 12:56

ROOM FINISH SCHEDULE

ROOM/SPACE NO.	NAME	FLOOR MAT'L	FIN./COL.	BASE	WALLS: NORTH MAT'L	FIN./COL.	WALLS: EAST MAT'L	FIN./COL.	WALLS: SOUTH MAT'L	FIN./COL.	WALLS: WEST MAT'L	FIN./COL.	CEILING MAT'L	FIN./ COL.	CLG. HT.	REMARKS
10th FLR	RESTROOM	CT-1		CTB-1	CT-2&3/PT-3		CONC-1	SEALED/PT-3	CONC-1	SEALED/PT-3	CT-2&3/PT-3		GWBW	PT-2	9'-0"	-
14th FLR	FLOOR AT 1228' LEVEL	CPC-1		RB-1	CONC-1	SEALED	CONC-1	SEALED	CONC-1	SEALED	CONC-1	SEALED	CONC-1	SEALED	-	-
-	ALL OTHER SPACES	CONC-1	SEALED	CONC-1	CONC-1	NO SEALED	CONC-1	NO SEALED	CONC-1	NO SEALED	CONC-1	NO SEALED	CONC-1	NO SEALED	-	-

WINDOW SCHEDULE

MARK	ROUGH OPENING (W X H)	TYPE	MAT'L	FINISH	COLOR	DETAILS HEAD	DETAILS JAMB	DETAILS SILL	NOTES
W01	8'-0" X 6'-0"	1	ALUM	ANOD	CLR	3/A504	2/A504	7/A504	PROV. MINI-BLINDS
W02	5'-0" X 6'-0"	2	ALUM	ANOD	CLR	3/A504	2/A504	7/A504	PROV. MINI-BLINDS
W03	5'-0" X 6'-0"	3	ALUM	ANOD	CLR	3/A504	2/A504	7/A504	PROV. MINI-BLINDS
W04	5'-0" X 9'-0"	4	ALUM	ANOD	CLR	3/A504	2/A504	7/A504	WITH DOOR

LOUVER SCHEDULE

MARK	MIN. FREE AREA OPENING (W X H)	MAT'L	FINISH	COLOR	DETAILS HEAD	DETAILS JAMB	DETAILS SILL	NOTES
LV-1A	76" X 54"	MTL	EPT-1	EPT-1	15/A504	15/A504	20/A504	SEE LVR NOTES
LV-1B	28" X 54"	MTL	EPT-1	EPT-1	15/A504	15/A504	20/A504	SEE LVR NOTES
LV-2A	48" X 54"	MTL	EPT-1	EPT-1	15/A504	15/A504	20/A504	SEE LVR NOTES
LV-2B	24" X 54"	MTL	EPT-1	EPT-1	15/A504	15/A504	20/A504	SEE LVR NOTES
LV-3	74" X 64"	MTL	EPT-1	EPT-1	15/A504	15/A504	20/A504	SEE LVR NOTES

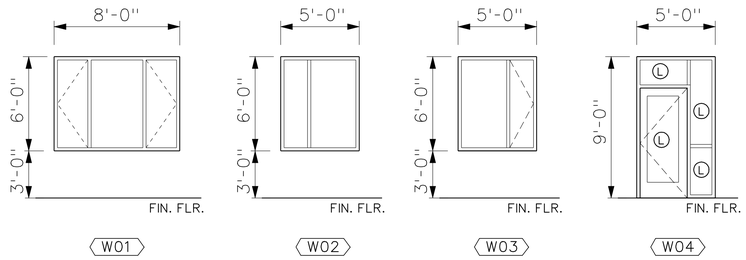

ALUMINUM - FRAMED STOREFRONT WINDOW

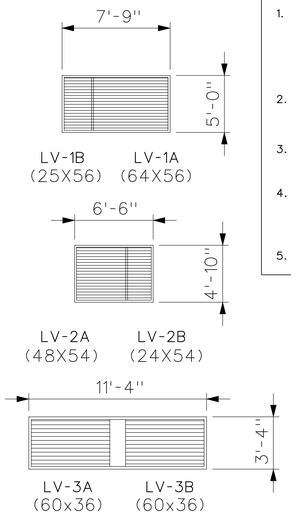

LOUVER

WINDOW / LOUVER NOTES

1. LOUVER SIZES INDICATED ON THIS PLATE ARE THE NOMINAL DIMENSIONS OF ROUGH OPENINGS IN EXTERIOR WALLS. "LOUVER OPENING" SIZES INDICATED ON MECHANICAL PLATES LIST THE DIMENSIONS OF THE DUCTWORK WHERE IT MEETS THE LOUVER. SEE MECHANICAL FOR FREE AREA REQUIREMENTS.
2. PROVIDE INSECT SCREENS AT THE EXTERIOR SIDE OF SINGLE HUNG WINDOWS. PROVIDE INSECT SCREENS ON THE INTERIOR SIDES OF CASEMENT & AWNING WINDOWS.
3. SEALANTS USED AT PERIMETER OF LOUVERS AND WINDOWS SHALL MATCH THE COLOR OF THE ADJACENT FRAME MATERIAL.
4. MANUFACTURER'S ARE LISTED FOR COLOR, PATTERN, STYLE OR TEXTURE REFERENCE. MATCHING COLORS, PATTERNS, STYLES AND TEXTURES PRODUCED BY OTHER MANUFACTURER'S ARE ACCEPTABLE.
5. (L) LAMINATED SAFETY GLAZING TO COMPLY WITH IBC 2406

INTERIOR FINISHES

MARK	FINISH
CONC-1	EXPOSED CONCRETE RE: FINISH SCHEDULE FOR SEALED AREAS
CPC-1	CONCRETE POLYURETHANE COATING (NON-SLIP) MFR: TREMCO STYLE: VULKEM 950, OVER VULKEM 360 COLOR: SLATE GRAY
CT-1	CERAMIC FLOOR TILE (RESTROOMS) MFR: DAL-TILE STYLE: MOSAIC, 2" x 2" COLOR: D050 MOTTLED MEDIUM BROWN
CT-2	CERAMIC WALL TILE MFR: DAL-TILE STYLE: FESTIVA MATTE GLAZED, 4" x 4" COLOR: QF16 DRIFTWOOD
CT-3	CERAMIC ACCENT TILE MFR: DAL-TILE STYLE: FESTIVA MATTE GLAZED, 4" x 4" COLOR: QF42 WILLOW
CTB-1	CERAMIC TILE BASE (RESTROOMS) MFR: DAL-TILE STYLE: GLAZED, COVED BASE, 4" x 4" COLOR: QF16 DRIFTWOOD
PT-1	PAINT (DOOR FRAMES/DOORS) MFR: SHERWIN WILLIAMS STYLE: LATEX SEMIGLOSS COLOR: CYBERSPACE SW7076
PT-2	PAINT (CEILING) MFR: SHERWIN WILLIAMS STYLE: LATEX SATIN COLOR: EXTRA WHITE SW7006
PT-3	PAINT (MAIN WALLS) MFR: SHERWIN WILLIAMS STYLE: LATEX SEMIGLOSS COLOR: ANTIQUE WHITE SW6119
RB-1	RESILIENT BASE, 4" MFR: JOHNSONITE STYLE: RUBBER BASE COLOR: WETLANDS 150

FINISH ABBREVIATIONS

ACT	ACOUSTICAL CEILING TILE
ANOD	ANODIZED FINISH
CONC	CONCRETE
CT	CERAMIC TILE
CTB	CERAMIC TILE BASE
GT	GROUT
GWB	GYPSUM WALLBOARD
NAT	NATURAL FINISH
PT	PAINT
RB	RUBBER BASE

FINISH REMARKS

1. ALL SPACES NOT LISTED IN FINISH SCHEDULE SHALL BE EXPOSED CONCRETE FINISH (SEALED @ HORIZONTAL SURFACES)

EXTERIOR FINISHES

EPT-1	LOUVERS, ROOF HATCH, EXTERIOR DOORS, WINDOW FRAMES, AND OVERFLOWS MFR.: SHERWIN WILLIAMS COLOR: GRIZZLE GRAY SW*7068
MTL-1	PEDESTRIAN BRIDGE AND GUARDRAIL ETC. TO MATCH EXISTING COLOR.

US Army Corps of Engineers
Seattle District

Symbol	Description	Date
		/ /

Appr.	Symbol

Designed by: TOLMAN/CHEN
Drawn by: TOLMAN
Checked by: CHEN
Date: 16 MAR 06
File: E-56-14-19
Rev.

U.S.ARMY ENGINEER DISTRICT,SEATTLE
CORPS OF ENGINEERS
SEATTLE, WASHINGTON
Prepared by:

ADDITIONAL WATER STORAGE PROJECT
HOWARD HANSON DAM
GREEN RIVER WASHINGTON

FINISH SCHEDULES I

Plate number:
A-601
Sheet of

DATE AND TIME PLOTTED: 07-AUG-2008 12:57
DESIGN FILE: J:\AECDESIGNS\HHAW\Architectural\HHAWA-601WFN.DGN

WALL TYPE SCHEDULE

EXTERIOR

TYPE	CONSTRUCTION DESCRIPTION	TYPICAL SECTION
1A	2' MINIMUM REINFORCED CONCRETE WALL (REFER TO STRUCTURAL FOR WIDTH AT EACH LOCATION) SEE NOTES 13, 14, 15	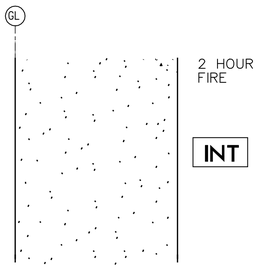

INTERIOR

TYPE	CONSTRUCTION DESCRIPTION	TYPICAL SECTION
2A	5/8" GWB 6" MTL STUD W/ 6" SOUND ATTENUATION INSUL. 5/8" GWB CEMENTITIOUS BACKER UNIT CERAMIC TILE WHERE SCHEDULE SEE NOTES 3, 4 AND 6	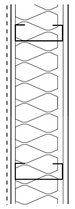
2B	5/8" GWB 6" MTL STUD W/ 6" SOUND ATTENUATION INSUL. 5/8" GWB CEMENTITIOUS BACKER UNIT CERAMIC TILE WHERE SCHEDULE SEE NOTES 3, 4 AND 6	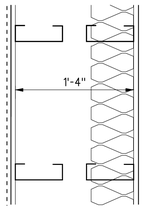

INTERIOR - STC/FIRE RATED

TYPE	CONSTRUCTION DESCRIPTION	TYPICAL SECTION
3A	8" MINIMUM REINFORCED CONCRETE WALL PER IBC 4-1.1 SEE NOTES 13	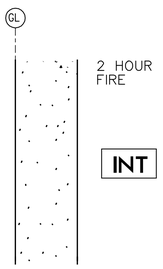
3B	2 LAYERS 5/8" GWB 6" MTL STUD W/ 6" SOUND ATTENTUATION BATTS 2 LAYERS 5/8" GWB UL DESIGN NO. U411 CONCRETE CURB AT LEVEL 1194' AND BELOW SEE NOTES 17	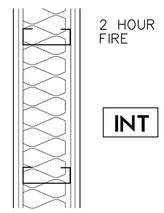
3C	3/4" GWB 4" MTL. "CH" STUD (20 ga) 3" SOUND ATTEN. FIRE BATTS 1" GYPSUM LINER PANEL UL DESIGN NO. U492 CONCRETE CURB AT LEVEL 1194' AND BELOW SEE NOTES 17	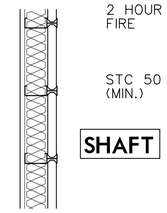

GENERAL NOTES:

1. WHERE WALL TYPE SHOWS A GRID LINE, VERIFY RELATIVE LOCATION OF WALL FACE AND CLEARANCES TO ADJACENT STRUCTURAL FRAMING.
2. FIRE RATINGS OF WALL TYPES ARE AS INDICATED AND CONSISTENT WITH THE UL DESIGN. CONSTRUCT ALL RATED WALLS IN STRICT CONFORMANCE WITH UL DESIGN REQUIREMENTS.
3. CEMENTITIOUS BACKER BOARD SHALL BE USED AT SHOWER WALLS, BEHIND URINALS AND WATER CLOSETS, BEHIND SERVICE SINKS IN JANITORS CLOSETS, AND UNDER ALL CERAMIC TILE SURFACED WALLS.
4. GWB SHALL BE 5/8" THICK, "TYPE - X", U.N.O.
5. GWB AT WALLS BEHIND SINKS, AND LAVATORIES SHALL BE "TYPE - X" WATER RESISTANT.
6. INSTALL METAL STUDS AT 16" O.C., U.N.O.
7. GWB SURFACES SHALL EXTEND UNINTERRUPTED TO THE FLOOR DECK ABOVE, MAINTAINING RATED WALL.
8. DIMENSIONS SHOWN FOR INTERIOR STC/FIRE RATED WALLS ARE OUTSIDE FACE OF STUD TO OUTSIDE FACE OF STUD.
9. SIZES OF MATERIALS ARE INDICATED AS INCH-POUND PRODUCT SIZES.
10. FIRE RATED WALLS SHALL HAVE PERIMETER FIRE SAFING AT ALL VOIDS AND FLUTES IN METAL DECKING. PROVIDE FIRE STOPPING CONSISTENT WITH WALL RATING AND SPECIFICATIONS AT ALL PENETRATIONS.
11. ALL WALLS THAT EXTEND TO THE BOTTOM OF METAL DECK OR STRUCTURAL STEEL SHALL BE CONSTRUCTED WITH DEFLECTION HEADS PROVIDING A MINIMUM OF 1" VERTICAL DEFLECTION.
12. ALL WALLS THAT DO NOT EXTEND TO THE BOTTOM OF CONCRETE SHALL BE CONSTRUCTED WITH BRACING TO CONCRETE, STRUCTURAL MEMBER OR ADJACENT CONCRETE WALL. BRACING SHALL PERMIT VERTICAL DEFLECTIONS.
13. REFER TO STRUCTURAL NOTES AND DETAILS FOR REQUIRED REINFORCEMENT AT CONCRETE WALLS.
14. ALL CONCRETE SURFACES REFERENCE BUILDING ELEVATIONS FOR LOCATION OF "V" SCORING IN CONCRETE.
15. ALL EXTERIOR CONCRETE WALLS BELOW GRADE TO HAVE CONCRETE WATERPROOFING ADMIXTURE. (RE: STRUCTURAL & SPECS)
16. UL DESIGN NUMBERS ARE CONSISTENT WITH THE UNDERWRITERS LABORATORIES FIRE RESISTANCE DIRECTORY (1996).
17. ALL GWB AT OR BELOW ELEVATION 1194' MUST BE "TYPE "X" WATER-RESISTANT. PROVIDE 6" CONCRETE CURB AT BASE OF ALL GWB WALLS AT OR BELOW 1194' PER DETAIL 10/A-506.

US Army Corps of Engineers
Seattle District

Symbol	Description	Date	Appr.	Symbol	Description
		/ /			

U.S.ARMY ENGINEER DISTRICT,SEATTLE
CORPS OF ENGINEERS
SEATTLE, WASHINGTON
Prepared by:

Designed by: TOLMAN/CHEN
Drawn by: HOPKINS
Checked by: CHEN
Date: 16 MAR 06
File: E-56-14-19
Rev.

ADDITIONAL WATER STORAGE PROJECT
HOWARD HANSON DAM
WALL TYPE SCHEDULE
GREEN RIVER - WASHINGTON

Plate number:
A-602
Sheet of

DATE AND TIME PLOTTED: 07-AUG-2008 12:57
DESIGN FILE: P:\AECDESIGNS\HHAW\Architectural\HHAWA-602SC2.DGN

DOOR SCHEDULE

DOOR NO.	NOMINAL DOOR SIZE	DOOR			FRAME			HDWR SETS	FIRE RATING	DETAILS			REMARKS
		TYPE	MAT	FIN/COL	TYPE	MAT	FIN/COL			HEAD	JAMB	SILL	
101	3'-0" X 7'-0"	F	HM	PT-1	F1	HM	PT-1	1	-	10/A504	10/A504	5/A504	
102	3'-0" X 7'-0"	F	HM	PT-1	F1	HM	PT-1	1		1/A504	6/A504	5/A504	
201	3'-6" X 7'-0"	F	HM	PT-1	F1	HM	PT-1	1	2-HR	10/A504	10/A504	5/A504	
202	3'-6" X 7'-0"	F	HM	PT-1	F1	HM	PT-1	1	2-HR	1/A504	6/A504	5/A504	
203W	3'-0" X 7'-0"	WT	STEEL	MFR	MFR	MFR	MFR	-		-	-	-	
204	3'-0" X 7'-0"	F	HM	PT-1	F1	HM	PT-1	7	2-HR	10/A504	10/A504	5/A504	
401	3'-0" X 7'-0"	F	HM	PT-1	F1	HM	PT-1	1	2-HR	10/A504	10/A504	5/A504	
402	(2)3'-0" X 7'-0"	F	HM	PT-1	F1	HM	PT-1	2	2-HR	1/A504	6/A504	5/A504	
403	8'-0" X 8'-0"	CFS	STEEL	MFR	MFR	MFR	MFR	-	2-HR	-	-	-	NOTE 19
404	2'-6" X 2'-6"	FH	STEEL	MFR	MFR	MFR	MFR	-	2-HR	-	-	-	
501	3'-0" X 7'-0"	F	HM	PT-1	F1	HM	PT-1	1	2-HR	10/A504	10/A504	5/A504	
502	(2)3'-0" X 7'-0"	F	HM	PT-1	F1	HM	PT-1	2	2-HR	1/A504	6/A504	5/A504	
503W	3'-0" X 7'-0"	WT	STEEL	MFR	MFR	MFR	MFR	-		2/A505	7/A505	12/A505	
504W	3'-0" X 7'-0"	WT	STEEL	MFR	MFR	MFR	MFR	-		2/A505	7/A505	12/A505	
505	8'-0" X 8'-0"	CFS	STEEL	MFR	MFR	MFR	MFR	-	2-HR	-	-	-	NOTE 19
506	2'-6" X 2'-6"	FH	STEEL	MFR	MFR	MFR	MFR	-	2-HR	-	-	-	
507	2'-6" X 2'-6"	FH	STEEL	MFR	MFR	MFR	MFR	-	2-HR	-	-	-	
508W	3'-0" X 7'-0"	WT	STEEL	MFR	MFR	MFR	MFR	-	-	2/A505	7/A505	12/A505	
601	3'-0" X 7'-0"	F	HM	PT-1	F1	HM	PT-1	1	2-HR	10/A504	10/A504	5/A504	
602	(2)3'-0" X 7'-0"	F	HM	PT-1	F1	HM	PT-1	2	2-HR	1/A504	6/A504	5/A504	
603W	3'-0" X 6'-0"	WT	STEEL	MFR	MFR	MFR	MFR	-		-	-	-	
604	8'-0" X 8'-0"	CFS	STEEL	MFR	MFR	MFR	MFR	-	2-HR	-	-	-	NOTE 19
701	3'-0" X 7'-0"	F	HM	PT-1	F1	HM	PT-1	1	2-HR	10/A504	10/A504	5/A504	
702	(2)3'-0" X 7'-0"	F	HM	PT-1	F1	HM	PT-1	2	2-HR	1/A504	6/A504	5/A504	
703W	3'-0" X 6'-0"	WT	STEEL	MFR	MFR	MFR	MFR	-		-	-	-	
704	8'-0" X 8'-0"	CFS	STEEL	MFR	MFR	MFR	MFR	-	2-HR	-	-	-	NOTE 19
801	3'-0" X 7'-0"	F	HM	PT-1	F1	HM	PT-1	2	2-HR	1/A504	6/A504	5/A504	
802	(2)3'-0" X 7'-0"	F	HM	PT-1	F1	HM	PT-1	2	2-HR	1/A504	6/A504	5/A504	
803W	3'-0" X 6'-0"	WT	STEEL	MFR	MFR	MFR	MFR	-		-	-	-	
804	8'-0" X 8'-0"	CFS	STEEL	MFR	MFR	MFR	MFR	-	2-HR	10/A504	10/A504	5/A504	NOTE 19
901	(2)3'-0" X 7'-0"	F	HM	PT-1	F1	HM	PT-1		2-HR	10/A504	10/A504	5/A504	
902	(2)3'-0" X 7'-0"	F	HM	PT-1	F1	HM	PT-1		2-HR	10/A504	10/A504	5/A504	
903	8'-0" X 8'-0"	CFS	STEEL	MFR	MFR	MFR	MFR		2-HR	-	-	-	NOTE 19
1001	3'-0" X 7'-0"	F	HM	PT-1	F1	HM	PT-1	1	2-HR	10/A504	10/A504	5/A504	
1002	3'-0" X 7'-0"	F	HME	PT-1	F1	HM	PT-1	4		1/A504	6/A504	5/A504	TOILET DOOR, 1/2" DOOR UNDERCUT
1003W	3'-0" X 7'-0"	WT	STEEL	MFR	MFR	MFR	MFR	3		2/A505	7/A505	12/A505	
1004W	6'-0" X 7'-0"	SWT	STEEL	MFR	MFR	MFR	MFR	3		9/A505	3&13/A505	18-20/A505	
1005	8'-0" X 8'-0"	CFS	STEEL	MFR	MFR	MFR	MFR	-	2-HR	-	-	-	NOTE 19
1006	2'-4" X 6'-6"	F	HM	PT-1	F1	HM	PT-1	8	2-HR	10/A504	10/A504	5/A504	
1101	3'-0" X 7'-0"	F	HME	PT-1	F1	HM	PT-1	1	2-HR	1/A504	6/A504	5/A504	
1102W	3'-0" X 7'-0"	WT	STEEL	MFR	MFR	MFR	MFR	3		2/A505	7/A505	12/A505	
1103W	3'-0" X 6'-6"	WT	STEEL	MFR	MFR	MFR	MFR	3		2/A505	7/A505	12/A505	
1104	8'-0" X 8'-0"	CFS	STEEL	MFR	MFR	MFR	MFR	-	2-HR	-	-	-	NOTE 19
1201	3'-0" X 7'-0"	F	HM	PT-1	F1	HM	PT-1	1	2-HR	10/A504	10/A504	5/A504	
1202	8'-0" X 8'-0"	CFS	STEEL	MFR	MFR	MFR	MFR	-	2-HR	-	-	-	NOTE 19
1301	3'-0" X 7'-0"	F	HM	PT-1	F1	HM	PT-1	1	2-HR	10/A504	10/A504	5/A504	
1302	8'-0" X 8'-0"	CFS	STEEL	MFR	MFR	MFR	MFR	-	2-HR	-	-	-	NOTE 19
1401	3'-0" X 7'-0"	F	HM	PT-1	F1	HM	PT-1	1	2-HR	10/A504	10/A504	5/A504	
1402	3'-0" X 7'-0"	AFG	HM	ANOD.	F-1	ALUM	ANOD	5		4/A504	9/A504	8/A504	
1403	8'-0" X 8'-0"	CFS	STEEL	MFR	MFR	MFR	MFR	-	2-HR	-	-	-	NOTE 19
1501	3'-0" X 7'-0"	F	HM	PT-1	F1	HM	PT-1	1	2-HR	10/A504	10/A504	5/A504	
1502	3'-0" X 7'-0"	F	HM	PT-1	F1	HM	PT-1	6	2-HR	10/A504	10/A504	5/A504	
1503	8'-0" X 8'-0"	CFS	STEEL	MFR	MFR	MFR	MFR	-	2-HR	-	-	-	NOTE 19
1601	8'-6" X 8'-6"	RFH	STEEL	EPT-1	MFR	MFR	EPT-1			-	-	-	NOTE 19
1602	3'-0" X 2'-6"	RFH	STEEL	EPT-1	MFR	MFR	EPT-1			-	-	-	NOTE 19

GENERAL NOTES

1. FIELD VERIFY ROUGH OPENINGS, TYP
2. EXTERIOR DOORS, FRAMES AND GLAZING MUST MEET DESIGN REQUIREMENTS OF DOD UFC 4-010-01, "STANDARD 10", SEE DETAILS AND SPECIFICATIONS .
3. SOLID GROUT EXTERIOR DOOR FRAMES WITH MORTAR.
4. DOOR ASSEMBLY SHALL MEET ALL REQUIREMENTS OF IBC (2003), SECTION 715.3.3
5. DOOR ASSEMBLY SHALL MEET ALL REQUIREMENTS OF IBC (2003), SECTION 715.3.4. THE SPRINKLER EXCEPTION SHALL NOT BE USED.
6. DOOR JAMB IS INSTALLED AGAINST BRICK VENEER AND CONCRETE WALL CONDITIONS, PROVIDE ANCHORS APPROPRIATE FOR ADJACENT MATERIALS.
7. EXTERIOR GLAZING IN DOORS, SIDELIGHTS AND TRANSOM LIGHTS ARE INSULATING UNITS, TYP. INTERIOR PANE OF GLASS SHALL BE 1/4" MINIMUM THICKNESS, LAMINATED GLASS. EXTERIOR PANE SHALL BE LAMINATED OR TEMPERED GLASS OF 1/4".
8. EXTERIOR GLAZING FRAMES AND STOPS IN DOORS, SIDELITES AND TRANSOM LITES SHALL PROVIDE A MINIMUM GLAZING "BITE" OF 1".
9. GLAZING IN DOORS, SIDELIGHTS AND WINDOWS IN INTERIOR WALLS NOT FIRE RATED SHALL BE TEMPERED SAFETY GLAZING.
10. GLAZING IN DOORS, SIDELIGHTS AND WINDOWS IN FIRE RATED INTERIOR WALLS SHALL BE FIRE PROTECTION RATED SAFETY GLAZING.
11. VERIFY HARDWARE AND GLAZING REQUIREMENTS TO MAINTAIN DOOR ASSEMBLY FIRE RATING WITH DOOR MANUFACTURER.
12. DOORS ARE 1-3/4" NOMINAL THICKNESS, U.N.O.
13. HOLLOW METAL FRAMES ARE 2" NOMINAL FACE WIDTH, U.N.O.
14. GALVANIZE FRAMES AT EXTERIOR DOORS AND DOORS AT TOILET, SHOWER AND JANITOR ROOMS.
15. PROVIDE FIRE DOOR ASSEMBLY LABELING MEETING IBC (2003), SECTION 715.3.5. PROTECT LABELS THROUGHOUT CONSTRUCTION.
16. COILING FLOOR SHUTTER COIL BOX WILL BE RECESSED INTO THE FLOOR OPENING SO THAT SHUTTER AND TOP OF BOX ARE FLUSH WITH THE TOP OF FLOOR SLAB.
17. MANUFACTURERS AND PRODUCTS LISTED ARE FOR COLOR, TEXTURE, AND/OR PATTERN REFRENCE ONLY AND ARE NOT INTENDED TO LIMIT SELECTION OF SIMILAR FINISH MATERIALS BY OTHER MANUFACTURERS.
18. ALL FLOOR/ROOF HATCHES AND WATERTIGHT DOORS HAVE STEEL FRAMES BY MANUFACTURER. CONTRACTOR TO COORDINATE OPENING SIZES AND ATTACHMENT WITH MANUFACTURER'S REQUIREMENTS.
19. ROUGH OPENING FOR ROOF HATCH AND COILING FLOOR SHUTTERS MUST BE COORDINATED WITH MANUFACTURER TO GET 8'-0"x8'-0" MIN CLEAR OPENING

SYMBOLS AND ABBREVIATIONS

Ⓕ - FIRE PROTECTION RATED GLAZING (90 MIN.)
Ⓛ - INSULATING UNIT WITH LAMINATED GLAZING TO COMPLY WITH IBC 2406 (EXTERIOR WALLS)

Ⓣ - TEMPERED GLAZING (INTERIOR NON-FIRE RATED WALLS)

ALUM	ALUMINUM
AN-X	ANODIZED FINISH COLOR (SEE EXTERIOR FINISH SCHEDULE)
ANOD	ANODIZED FINISH
EPT-X	EXTERIOR PAINT COLOR (SEE EXTERIOR FINISH SCHEDULE)
HM	HOLLOW METAL (STEEL) DOOR OR FRAME
HMA	HOLLOW METAL (STEEL) ACOUSTIC INSULATED DOOR OR FRAME
HME	HOLLOW METAL (STEEL) THERMAL INSULATED DOOR OR FRAME
MFR	MANUFACTURER
MIN	MINUTES
MV	PLAIN SLICED WHITE MAPLE VENEER/MARSHFIELD DOOR SYSTEMS ENVIROCLAD UV STAIN: CINNAMON
PR	PAIR
PT-X	INTERIOR PAINT COLOR (SEE ROOM FINISH SCHEDULE)
PT	PAINT FINISH
SCWD	SOLID CORE WOOD DOOR
UV	UV CURED POLYURETHANE SEALER (GLOSS)

DOOR TYPES

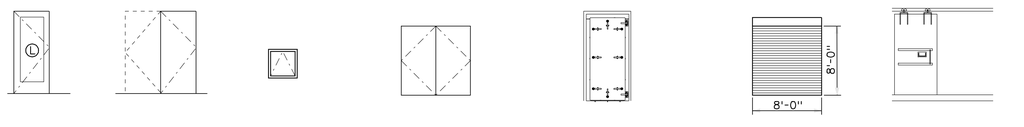

AFG — ALUM. FULL GLAZED

F — FLUSH

FH — FLOOR HATCH DOOR

RFH — ROOF HATCH DOOR

WT — QUICK-ACTING WATERTIGHT DOOR

CFS — COILING FLOOR SHUTTER

SWT — SLIDING WATERTIGHT DOOR

FRAME TYPES

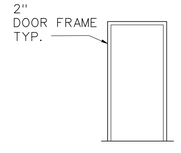

F1 — FLUSH DOOR

US Army Corps of Engineers
Seattle District

No.	Description	Date	Appr.	Symbol
		/ /		

No.	Description	Date	Appr.	Symbol

Designed by: TOLMAN/CHEN
Drawn by: TOLMAN
Checked by: CHEN
Date: 16 MAR 06
File # E-56-14-19
Rev.

U.S.ARMY ENGINEER DISTRICT,SEATTLE
CORPS OF ENGINEERS
SEATTLE, WASHINGTON
Prepared by:

ADDITIONAL WATER STORAGE PROJECT
HOWARD HANSON DAM
GREEN RIVER WASHINGTON

DOOR SCHEDULE

Plate number:
A-603
Sheet of

DESIGN FILE: I:\AECDESIGNS\HHAW\Architectural\HHAWA-603SC3.DGN
DATE AND TIME PLOTTED: 07-AUG-2008 12:57

SCHEDULE: SIGNAGE

FLOOR	AREA	SIGN MESSAGE	DETAIL NO.	REMARKS
ALL	INTERIOR STAIR DOOR	ROOM ID (VERIFY W/USER)	3/A-604	
5th	STAIR	DIRECTIONAL	16/A-604	
10th	TOILET ROOM DOOR		5/A-604	
10th	ELEVATOR	BUILDING DIRECTORY	14/A-604	
10th	EXTERIOR STAIR DOOR		4/A-604	
EXTERIOR	AT FIRE DEPT. CONNECT.	FIRE DEPARTMENT CONNECTION	9/A-604	SEE NOTE 3, 5 & 7
EXTERIOR	AT NG/LPG ENTRANCES	GAS SHUT OFF	8/A-604	SEE NOTE 3
EXTERIOR	AT BLDG. NUMBERS	SEE NOTE 4	10/A-604	SEE NOTES 3, 4, & 5

GENERAL NOTES TO SIGN SCHEDULE

1. MOUNT ROOM SIGNS WITH VERTICAL CENTER AT 5'-0" ABOVE FINISHED FLOOR. MOUNT SIGN ON WALL ADJACENT TO LATCH SIDE OF DOOR OR ON NEAREST ADJACENT WALL PER ADAAG REQUIREMENTS.
2. INCLUDE THE INTERNATIONAL SYMBOLS FOR GENDER ON TOILET ROOM SIGNS.
3. MOUNT EXTERIOR SIGNS WITH STAINLESS STEEL MASONRY SLEEVE ANCHORS.
4. FOUR BUILDING NUMBER SIGNS ARE REQUIRED. BUILDING NUMBERS PER CIVIL PLANS. MOUNT WHERE INDICATED ON ELEVATIONS.
5. EXTERIOR SIGNAGE SHALL BE FABRICATED WITH NON-FERROUS MATERIALS THAT ARE BOTH WEATHER AND UV RESISTANT.
6. SEE CIVIL AND LANDSCAPE DRAWINGS FOR ALL SIGNAGE NOT MOUNTED ON THE BUILDING.
7. PRIOR TO BEGINNING SHOP DRAWINGS, MEET WITH C.O.R. AND INSTALLATION REPRESENTATIVES TO CONFIRM ROOM NAMES AND COORDINATE ALL SIGNAGE. IF CHANGES TO ROOM NAMES OR NUMBERS ARE REQUIRED, SUBMIT A REVISED SIGNAGE SCHEDULE PRIOR TO INITIATING SIGNAGE FABRICATION.
8. SIGNS INDICATING CORRIDORS, LOBBYS OR ENTRANCE VESTIBULES ARE NOT REQUIRED.
9. COLORS FOR ALL PLAQUE TYPE SIGNS:
   BACKGROUND: SILVER
   FRAME: BLACK
   TEXT AND PICTOGRAPHS: BLACK
10. ONE SIGN TO BE MOUNTED ON EACH SIDE OF DOOR WITH VERTICAL CENTER AT 5'-0".

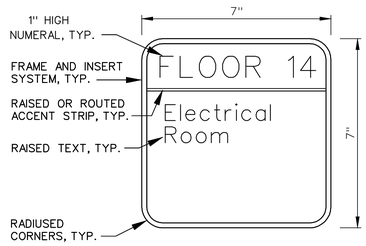

3 NAME AND FLOOR
NOT TO SCALE

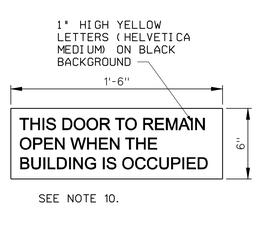

SEE NOTE 10.

4 EGRESS DOORS
NOT TO SCALE

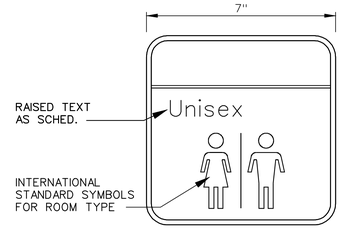

5 PICTOGRAPH
NOT TO SCALE

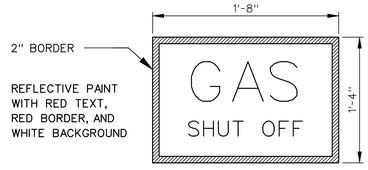

MOUNTING HEIGHT: 6'-0" ABOVE GRADE

8 GAS SHUT OFF
NOT TO SCALE

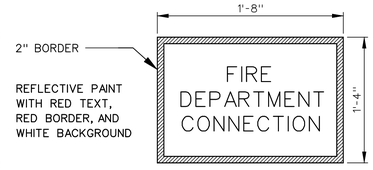

MOUNTING HEIGHT: 6'-0" ABOVE GRADE

9 FIRE DEPT. CONNECT.
NOT TO SCALE

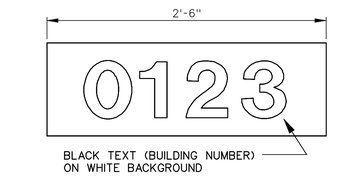

MOUNTING LOCATIONS AS INDICATED ON BUILDING ELEVATIONS

10 BUILDING NUMBER
NOT TO SCALE

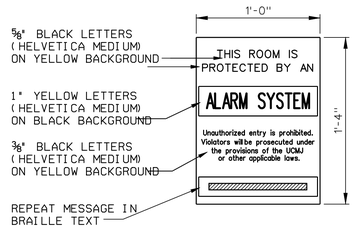

13 ALARM SYSTEM
NOT TO SCALE

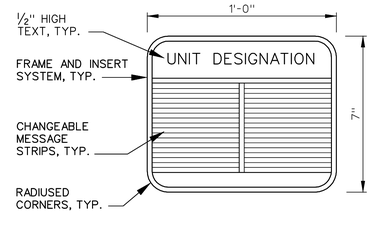

14 BUILDING DIRECTORY
NOT TO SCALE

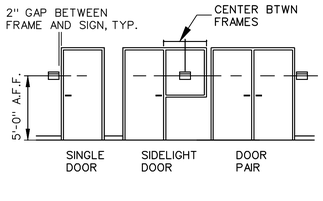

15 SIGN LOCATIONS
NOT TO SCALE

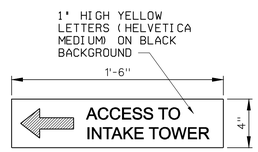

16 DIRECTIONAL SIGN
NOT TO SCALE

US Army Corps of Engineers
Seattle District

Description	Symbol	Appr.	Date
			/ /

Designed by: TOLMAN/CHEN
Drawn by: TOLMAN
Checked by: CHEN
Date: 16 MAR 06
File: E-56-14-19
Rev.

U.S.ARMY ENGINEER DISTRICT,SEATTLE
CORPS OF ENGINEERS
SEATTLE, WASHINGTON
Prepared by:

ADDITIONAL WATER STORAGE PROJECT
HOWARD HANSON DAM
GREEN RIVER WASHINGTON

SIGNAGE SCHEDULES

Plate number:
A-604
Sheet of

DESIGN FILE: I:\AECDESIGNS\HHAW\Architectural\HHAWA-604SC4.DGN
DATE AND TIME PLOTTED: 07-AUG-2008 12:57

PLUMBING LEGEND

SYMBOL	DESCRIPTION
	DIAGRAM OR DETAIL INDICATOR DIAGRAM OR DETAIL NUMBER PLAN SHEET NUMBER
— A —	COMPRESSED AIR
····· C ·····	CONTROL (CONDUIT NOT INDICATED; SEE ELEC)
— D —	DRAIN PIPING (ABOVE SLAB)
---- D ----	DRAIN PIPING (IMBEDDED IN SLAB OR UNDERGROUND)
— H —	HYDRAULIC OIL PIPING
— RW —	WATER (RAW RIVER)
— S —	SEWER
— W —	WATER (DOMESTIC WELL)
---- V ----	VENT (SEWER)
	PRESSURE GAUGE WITH GAUGE COCK
	HOSE FLEXIBLE CONNECTOR
	BRAIDED FLEXIBLE CONNECTOR
	CHECK VALVE
	GATE VALVE - MANUAL GATE VALVE - MANUAL
	GATE VALVE - REMOTE ACTUATED (MOTOR)
	GATE VALVE - REMOTE ACTUATED (ACTUATION METHOD UNSPECIFIED)
	BALL VALVE - MANUAL
	BALL VALVE - REMOTE ACTUATED
	BUTTERFLY VALVE - MANUAL
	BUTTERFLY VALVE - REMOTE ACTUATED
	PIPE SIZE REDUCTION/EXPANSION
	COMPRESSED AIR SOLENOID VALVE
	2-WAY CONTROL VALVE
	3-WAY CONTROL VALVE
	DIRECTION OF PITCH DOWN
	DIRECTION OF FLOW
	PIPING UNION
	ELBOW TURN DOWN
	ELBOW TURN UP
	RISE OR DROP
	BRANCH - TOP CONNECTION
	BRANCH - BOTTOM CONNECTION
	BRANCH - SIDE CONNECTION
	CAPPED PIPING
	COMPRESSED AIR TOOL OUTLET
	BREATHING AIR RESPIRATORY PROTECTOR

SYMBOL	DESCRIPTION
	BRANCH TAKE-OFF, TYPICAL: INCLUDES ADJUSTABLE TURNING VANE WITH COMMERCIAL AIR EXTRACTOR, MANUAL VOLUME DAMPER, DUCT RUNOUT, AND AIR DISTRIBUTION DEVICE. COMPONENT SIZES SHALL BE AS INDICATED; SEE SPECIFICATIONS, SCHEDULES, PLANS, AND M-594.
	DOUBLE LINE DUCT REPRESENTATION WITH RIGID DOUBLE LINE DUCT RUNOUT
	DOUBLE LINE DUCT REPRESENTATION WITH FLEXIBLE DOUBLE LINE DUCT RUNOUT
	SINGLE LINE DUCT REPRESENTATION WITH FLEXIBLE DOUBLE LINE DUCT RUNOUT
	DUCT DIMENSION (DOUBLE LINE; INCHES) 1ST DIMENSION - SIDE SHOWN; 2ND DIMENSION - DEPTH
	DUCT DIMENSION (SINGLE LINE; INCHES) 1ST DIMENSION - SIDE SHOWN; 2ND DIMENSION - DEPTH
	DUCT DIMENSION (SINGLE LINE; INCHES) DIMENSION SHOWN - DIAMETER
	SUPPLY DUCT SECTION
	SUPPLY DUCT END ELEVATION
	EXHAUST, RETURN OR OUTSIDE AIR DUCT END SECTION
	EXHAUST, RETURN OR OUTSIDE AIR DUCT END ELEVATION
	UH-HORIZONTAL OUTLET UNIT HEATER
	RH-RADIANT HEATER, ELEC
	EF-EXHAUST FAN, CEILING MOUNTED
	SMACNA DUCT PRESSURE CLASSIFICATION, IN. W.G.
	DUCT CHANGE OF ELEVATION, RISE (R), DROP (D)
	THERMOSTAT
	ELBOW WITH TURNING VANES; DUCT ELBOWS WITHOUT VANES SHALL HAVE AN ASPECT RATIO (R/D) OF 1.5 OR GREATER
	MANUAL VOLUME DAMPER (REQUIRED ON DUCTS SERVING DIFFUSERS WITH OR WITHOUT INTERNAL DAMPER)
	FIRE DAMPER (REQUIRED ON DUCTS PENETRATING FIRE RATED WALLS, SEE SPECS)
	MANUAL VOLUME DAMPER

PLUMBING ABBREVIATIONS

AC	AIR COMPRESSOR
AD	AREA DRAIN / AIR DROP
AAV	AUTOMATIC AIR VENT
BARP-X	BREATHING AIR RESPIRATORY PROTECTOR-X
BFP	BACKFLOW PREVENTER
CA	COMPRESSED AIR
CO	CLEANOUT
COMPR	COMPRESSOR
CW	COLD WATER
D	DRAIN
DR	DRAIN
DV	DRAIN VALVE
ET	EXPANSION TANK
EWH	ELECTRIC WATER HEATER
FCO	FLOOR CLEANOUT
FD	FLOOR DRAIN (PLMG); FIRE DAMPER (MECH)
HB	HOSE BIBB
LPD	LOW POINT DRAIN (MANUAL VALVE)
NPSH	NET POSITIVE SUCTION HEAD
OWS	OIL WATER SEPARATOR
PLMG	PLUMBING
RD	ROOF DRAIN
RW	RIVER WATER (RAW WATER)
S	SANITARY SEWER / SOUTH
V	VENT
VTR	VENT THROUGH ROOF
WCO	WALL CLEANOUT
WH	WATER HEATER / WALL HYDRANT

NON-PLUMBING ABBREVIATIONS

AFF	ABOVE FINISHED FLOOR
AL, ALUM	ALUMINUM
APPROX	APPROXIMATE
AWC	ATTRACTION WATER CONDUIT
BH	BULKHEAD
BHP	BRAKE HORSEPOWER
BLDG	BUILDING
BTU	BRITISH THERMAL UNITS
BTUH	BRITISH THERMAL UNITS PER HOUR
CAP	CAPACITY
CH	CHILLER / CABINET HEATER
CI	CAST IRON
CLG	CEILING
CONN	CONNECTION
CONT	CONTROL / CONTINUED
CTL	CONTROL
CTR	CONTRACTOR
CV	CONTROL VALVE
DI	DUCTILE IRON
DIA, \	DIAMETER
DN	DOWN
EFF	EFFICIENCY
EG	EXHAUST GRILLE, EMERGENCY GATE
EL / ELEV	ELEVATION
EMCS	ENERGY MONITORING & CONTROL SYSTEM
ENT	ENTERING
EWT	ENTERING WATER TEMP
EXIST	EXISTING
EXT	EXTERNAL / EXTERIOR
°F	F DEGREE FAHRENHEIT
FC	FLEXIBLE CONNECTION / FORWARD CURVED / FISH COLLECTOR
FCT	FLOOD CONTROL TUNNEL
FD	FIRE DAMPER (MECH) FLOOD DRAIN (PLMG)
FDC	FIRE DEPARTMENT CONNECTION
FIXT	FIXTURE
FLEX	FLEXIBLE
FLR	FLOOR
FM	FLOW METER
FP	FIRE PROTECTION
FPF	FISH PASSAGE FACILITY
FPM	FEET PER MINUTE / FINS PER METER
FS	FLOW SENSOR
FT	FEET
FV	FACE VELOCITY / AUTOMATIC FILL VALVE
FW	FISH WELL
GAL	GALLON
GCO	GROUND CLEANOUT
GFCI	GOVT FURNISHED CTR INSTALLED
GOVT	GOVERNMENT
GPH	GALLONS PER HOUR
GPM	GALLONS PER MINUTE

NON-PLUMBING ABBREVIATIONS (CONTINUED)

H	HOPPER
HC	HEATING COIL
HE	HEAT EXCHANGER
HP	HORSEPOWER
HPU	HYDRAULIC POWER UNIT
HT	HEIGHT
HTG	HEATING
HV	HEATING AND VENTILATING
HVAC	HEATING, VENTILATING & AIR CONDITIONING
HW	DOMESTIC HOT WATER
HZ	HERTZ
IAW	IN ACCORDANCE WITH
ID	INSIDE DIAMETER
IE	INVERT ELEVATION
IFS	INCLINED FISH SCREEN
IN	INCH
IS	INCLINED SCREEN
IWG	INCHES WATER GAGE
IV	ISOLATION VALVE
KW	KILOWATT
LB	POUND
LR	LONG RADIUS
LS	LEVEL SENSOR
LVG	LEAVING
LVDT	LINEAR VARIABLE DIFFERENTIAL TRANSFORMER
LWT	LEAVING WATER TEMP
M	METER, MOTOR
MAX	MAXIMUM
MBH	1000 BTUH
MCA	MINIMUM CIRCUIT AMPACITY
MECH	MECHANICAL
MIN	MINIMUM / MINUTE
MTD	MOUNTED
MTG	MOUNTING
N	NORTH
NA	NOT APPLICABLE
NC	NORMALLY CLOSED
NIC	NOT IN CONTRACT
NO	NORMALLY OPEN
NO.	NUMBER
NOM	NOMINAL
NTS	NOT TO SCALE
OD	OUTSIDE DIAMETER
OPER	OPERATING
OPNG	OPENING
OS&Y	OUTSIDE SCREW & YOKE
PD	PRESSURE DROP
PH, \	PHASE
POC	POINT OF CONNECTION
PRESS	PRESSURE
PROP	PROPELLER
PRV	PRESSURE REDUCING VALVE
PSI	POUNDS PER SQUARE INCH
PSIG	POUNDS PER SQUARE INCH GAUGE
QTY	QUANTITY
REQ'D	REQUIRED
RG	RADIAL GATE
RM	ROOM
RPM	REVOLUTIONS PER MINUTE
RQMT	REQUIREMENT
SEC	SECOND
SENS	SENSIBLE
SF	SQUARE FEET
SG	SLIDE GATE
SMACNA	SHEET METAL & AIR CONDITIONING CONTRACTORS' NATIONAL ASSOCIATION
SPLY	SUPPLY
SQ FT	SQUARE FEET
STD	STANDARD
STL	STEEL
STS, SSL	STAINLESS STEEL
SYST	SYSTEM
TEMP	TEMPERATURE
TG	TRANSFER GRILLE
TYP	TYPICAL
V	VOLTAGE
VA	VALVE
VEL	VELOCITY
W	(WELL) WATER
W/	WITH
WB	WET BULB
WC	WATER COLUMN
WG	WATER GAGE
WPD	WATER PRESSURE DROP
WT	WEIGHT
WTR	WATER
WW	WET WELL

NOTES:

1. FOR ITEMS ON THIS SHEET SHOWN IN GREY TONE, REFER TO MECHANICAL SHEETS. IN GENERAL, MECHANICAL ITEMS ARE SHOWN IN GREY TONE ON THE PLUMBING PLANS; PLUMBING ITEMS ARE SHOWN IN GREY TONE ON THE MECHANICAL PLANS.
2. SEE M-001 FOR MECHANICAL ABBREVIATIONS.

US Army Corps of Engineers
Seattle District

Symbol	Description	Date
		/ /

Designed by: BRANDT
Drawn by: BRANDT
Checked by:
Prepared by:

U.S.ARMY ENGINEER DISTRICT, SEATTLE
CORPS OF ENGINEERS
SEATTLE, WASHINGTON

Date: 16 MAR 06
File: E-56-14-19
Rev.

ADDITIONAL WATER STORAGE PROJECT
HOWARD HANSON DAM
GREEN RIVER WASHINGTON

PLUMBING LEGEND
AND ABBREVIATIONS

Plate number:
P-001
Sheet of

DESIGN FILE: I:\AECDESIGNS\HHAWP\Plumbing\HHAWP-001001.DGN
DATE AND TIME PLOTTED: 07-AUG-2008 11:18

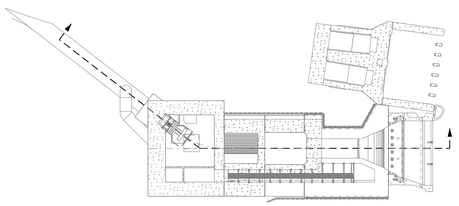

LOCATION OF SECTION CUT THROUGH CONCRETE STRUCTURE

NTS

FPF ISOMETRIC SECTION CUT ILLUSTRATION OF MAJOR EQUIPMENT

NTS

NOTES:

1. NOT ALL EQUIPMENT IS SHOWN FOR CLARITY.

2. FISH WELL LIFTING HOPPER NOT SHOWN (SEE PORTION OF DRAWING PACKAGE CONTAINING FISH MONITORING STATION PLANS).

3. SEE STRUCTURAL DRAWINGS FOR DETAILS OF THE CONCRETE STRUCTURE, THE IFS, THE MITER GATE, AND THE FISH WELL DRAIN SCREEN.

US Army Corps of Engineers
Seattle District

Symbol	Description	Date	Appr.	Symbol	Description
		/ /			

Date: 16 MAR 06
File: E-56-14-19
Rev.

Designed by: EC
Drawn by: EC
Checked by: X

U.S.ARMY ENGINEER DISTRICT,SEATTLE
CORPS OF ENGINEERS
SEATTLE, WASHINGTON

Prepared by:

ADDITIONAL WATER STORAGE PROJECT
HOWARD HANSON DAM
GREEN RIVER WASHINGTON

PLUMBING EQUIPMENT LAYOUT

Plate number: P-002
Sheet of

FILE: I:\AECDESIGNS\HHAW\Plumbing\HHAWP-002AXX.DGN
DESIGN FILE: PLUMBING
DATE AND TIME PLOTTED: 07-AUG-2008 11:19

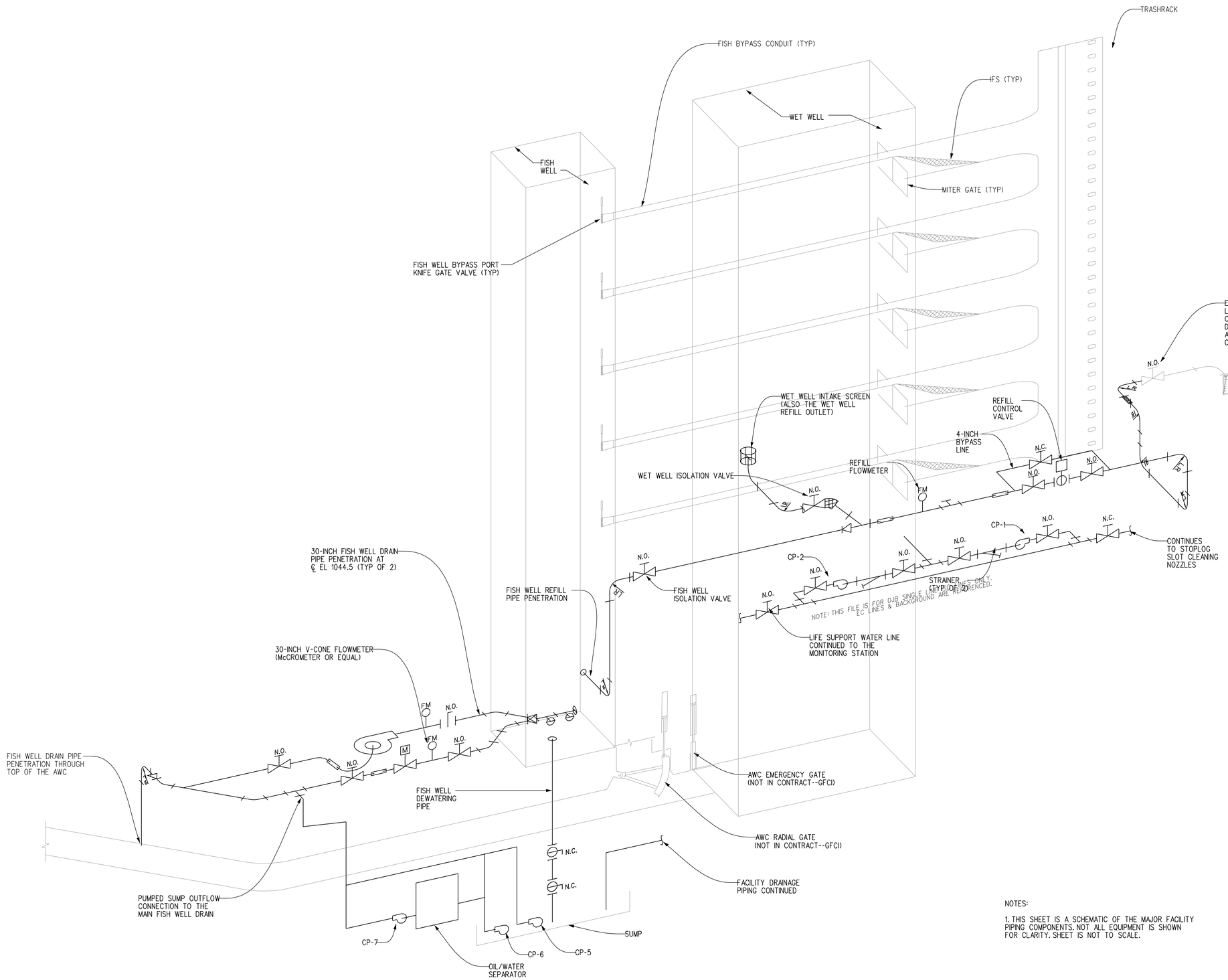

RIVER WATER PIPING ISOMETRIC

NTS

NOTES:

1. THIS SHEET IS A SCHEMATIC OF THE MAJOR FACILITY PIPING COMPONENTS. NOT ALL EQUIPMENT IS SHOWN FOR CLARITY. SHEET IS NOT TO SCALE.

US Army Corps of Engineers
Seattle District

Symbol	Description	Date	Appr.	Symbol	Description
		/ /			

U.S.ARMY ENGINEER DISTRICT,SEATTLE
CORPS OF ENGINEERS
SEATTLE, WASHINGTON

Designed by: EC, DJB
Drawn by: EC
Checked by:
Prepared by:
Date: 16 MAR 06
File: E-56-14-19
Rev.

ADDITIONAL WATER STORAGE PROJECT
HOWARD HANSON DAM
GREEN RIVER WASHINGTON

RIVER WATER PIPING
ISOMETRIC

Plate number:
P-003
Sheet of

DATE AND TIME PLOTTED: 07-AUG-2008 11:19
DESIGN FILE: F:\ECDESIGNS\HHAW\Plumbing\HHAWP-003BXX.DGN

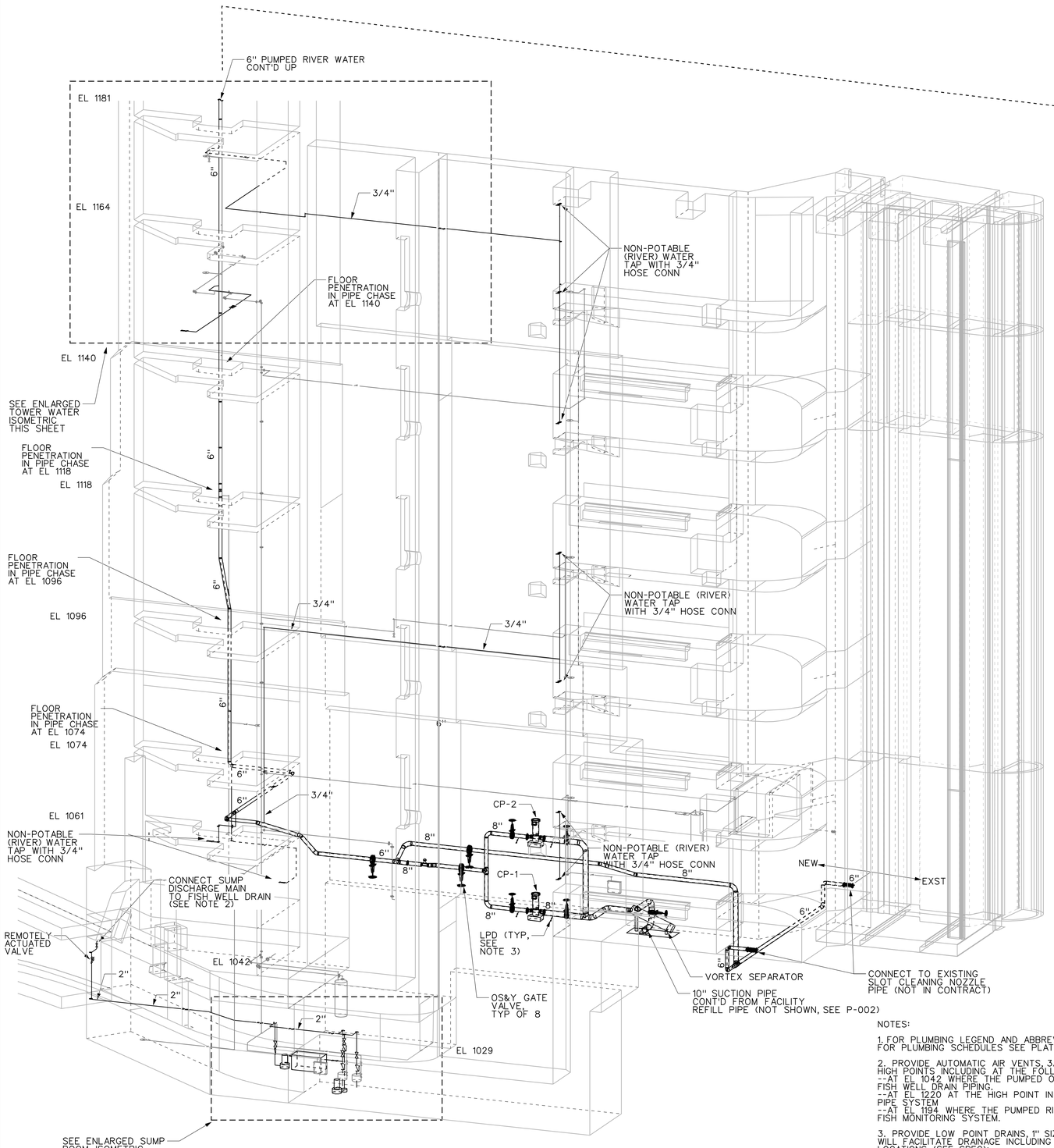

PUMPED RIVER WATER ISOMETRIC

NOT TO SCALE

NOTES:

1. FOR PLUMBING LEGEND AND ABBREVIATIONS SEE PLATE M-001. FOR PLUMBING SCHEDULES SEE PLATE P-601.

2. PROVIDE AUTOMATIC AIR VENTS, 3/4" CONNECTION SIZE, AT ALL HIGH POINTS INCLUDING AT THE FOLLOWING LOCATIONS (SEE SPEC):
--AT EL 1042 WHERE THE PUMPED OWS OUTLET MEETS THE FISH WELL DRAIN PIPING.
--AT EL 1220 AT THE HIGH POINT IN THE PUMPED RIVER WATER PIPE SYSTEM
--AT EL 1194 WHERE THE PUMPED RIVER WATER CONNECTS TO THE FISH MONITORING SYSTEM.

3. PROVIDE LOW POINT DRAINS, 1" SIZE, AT ALL LOW POINTS THAT WILL FACILITATE DRAINAGE INCLUDING AT THE FOLLOWING LOCATIONS (SEE SPEC):
--AT PUMP SUCTIONS IN THE EL 1061 GALLERY
--AT THE PUMP DISCHARGE IN THE EL 1061 GALLERY
--AT THE RIVER WATER PRESSURE TANK AT EL 1164.

4. FOR PIPE MATERIAL SEE PIPE SCHEDULE ON SHEET P-602.

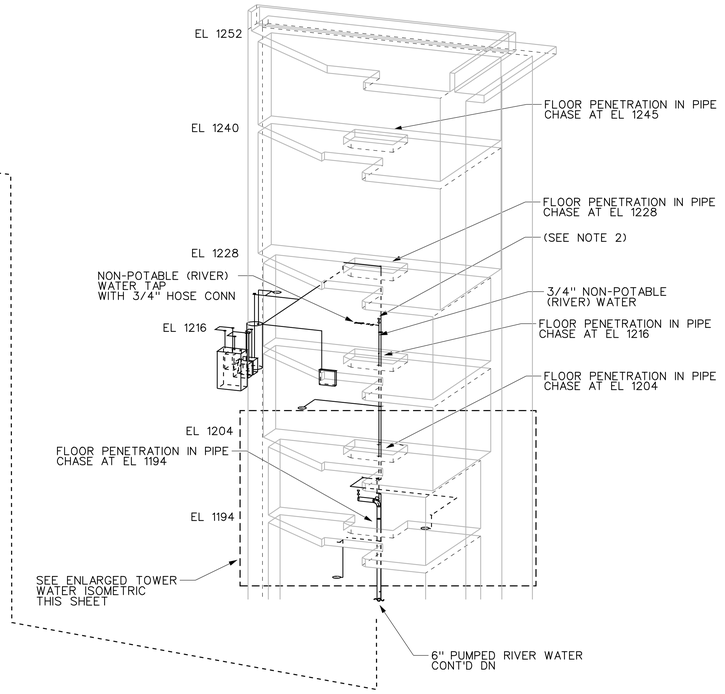

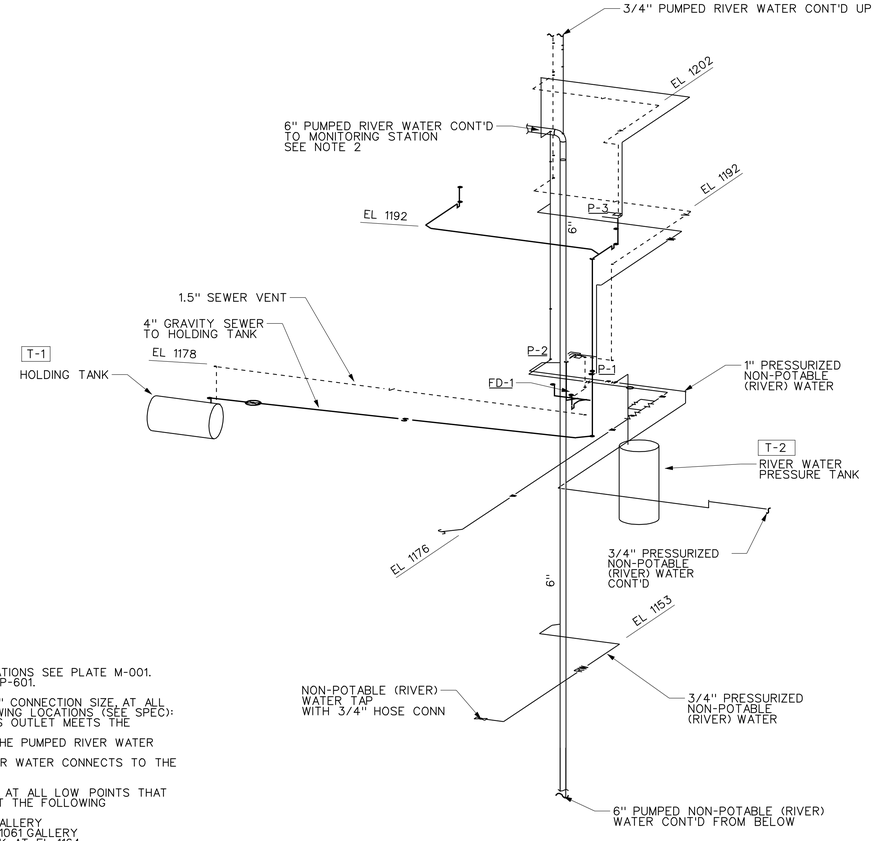

ENLARGED TOWER WATER ISOMETRIC

NOT TO SCALE

US Army Corps of Engineers
Seattle District

Symbol	Description	Date	Appr.	Symbol	Description
		/ /			

Designed by:
Drawn by:
Checked by:
Prepared by:

Date: 16 MAR 06
File # E-56-14-19
Rev.

U.S.ARMY ENGINEER DISTRICT,SEATTLE
CORPS OF ENGINEERS
SEATTLE, WASHINGTON

ADDITIONAL WATER STORAGE PROJECT
HOWARD HANSON DAM
GREEN RIVER WASHINGTON

PUMPED RIVER WATER ISOMETRIC

Plate number: P-004
Sheet of

DATE AND TIME PLOTTED: 07-AUG-2008 11:20
DESIGN FILE: I:\AECDESIGNS\HHAW\Plumbing\HHAWP-004004.DGN

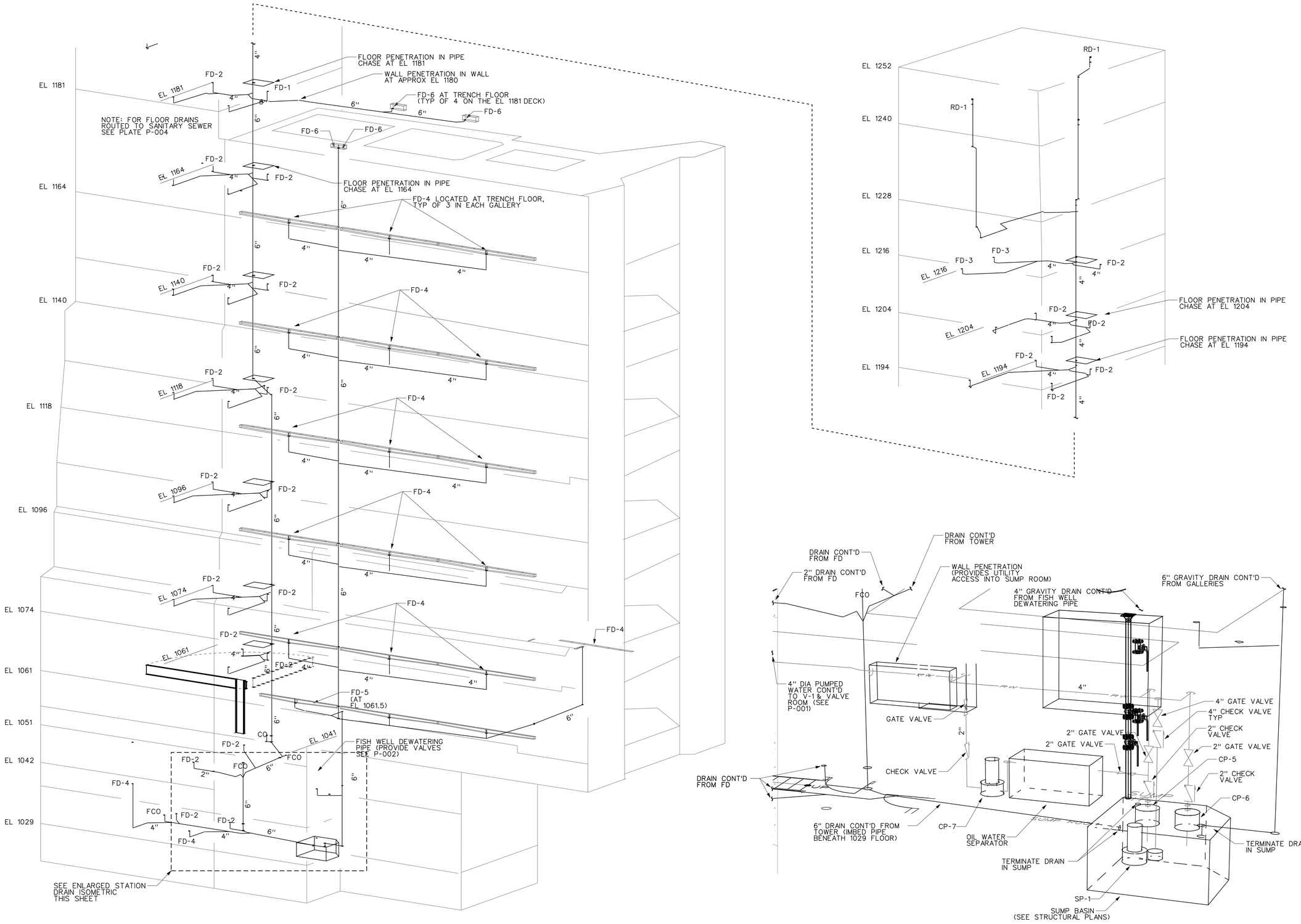

STATION DRAIN ISOMETRIC

NOT TO SCALE

ENLARGED SUMP ROOM ISOMETRIC

NOT TO SCALE

NOTES:

1. FOR PLUMBING LEGEND AND ABBREVIATIONS SEE PLATE M-001. FOR PLUMBING SCHEDULES SEE PLATE P-601.
2. FOR SUMP BASIN DETAIL SEE P-501.
3. FOR PUMP CTL SEQUENCE SEE P-7XX.

US Army Corps of Engineers
Seattle District

Symbol	Description	Date	Appr.	Symbol	Description
		/ /			

Designed by: DJB
Drawn by: DJB
Checked by:
Date: 16 MAR 06
File: E-56-14-19
Rev.

U.S.ARMY ENGINEER DISTRICT, SEATTLE
CORPS OF ENGINEERS
SEATTLE, WASHINGTON
Prepared by:

ADDITIONAL WATER STORAGE PROJECT
HOWARD HANSON DAM
STATION DRAINAGE ISOMETRIC
GREEN RIVER WASHINGTON

Plate number: P-005
Sheet of

DESIGN FILE: I:\AECDESIGNS\HHAWP\Plumbing\HHAWP-005005.DGN
DATE AND TIME PLOTTED: 07-AUG-2008 11:21

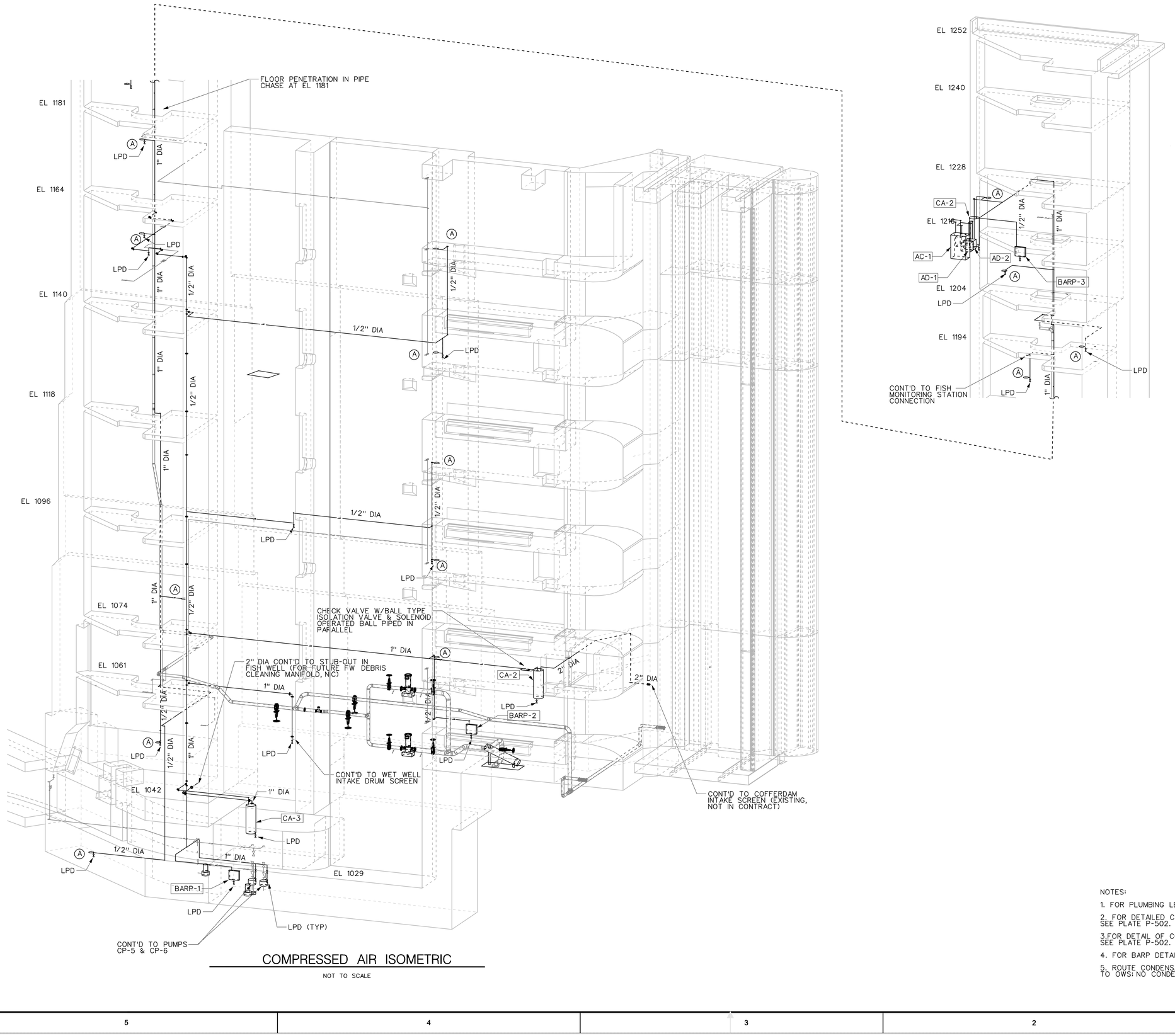

COMPRESSED AIR ISOMETRIC

NOT TO SCALE

NOTES:

1. FOR PLUMBING LEGEND AND ABBREVIATIONS SEE PLATE M-001.
2. FOR DETAILED COMPRESSED AIR EQUIPMENT SCHEMATIC SEE PLATE P-502.
3. FOR DETAIL OF COMPRESSED AIR OUTLETS DESIGNATED THUS (A) SEE PLATE P-502.
4. FOR BARP DETAIL SEE PLATE P-501.
5. ROUTE CONDENSATE DRAIN AND LPD PIPING TO FLOOR DRAINS CONNECTED TO OWS: NO CONDENSATE SHALL BE ROUTED TO SEWAGE HOLDING TANK.

US Army Corps of Engineers
Seattle District

Symbol	Description	Appr.	Date
			/ /

U.S.ARMY ENGINEER DISTRICT,SEATTLE
CORPS OF ENGINEERS
SEATTLE, WASHINGTON
Prepared by:

Designed by: DJB
Drawn by: DJB
Checked by:
Date: 16 MAR 06
File * E-56-14-19
Rev.

ADDITIONAL WATER STORAGE PROJECT
HOWARD HANSON DAM
GREEN RIVER WASHINGTON

COMPRESSED AIR ISOMETRIC

Plate number: P-006
Sheet of

DATE AND TIME PLOTTED: 07-AUG-2008 11:22
DESIGN FILE: I:\AECDESIGNS\HHAW\Plumbing\HHAWP-006006.DGN

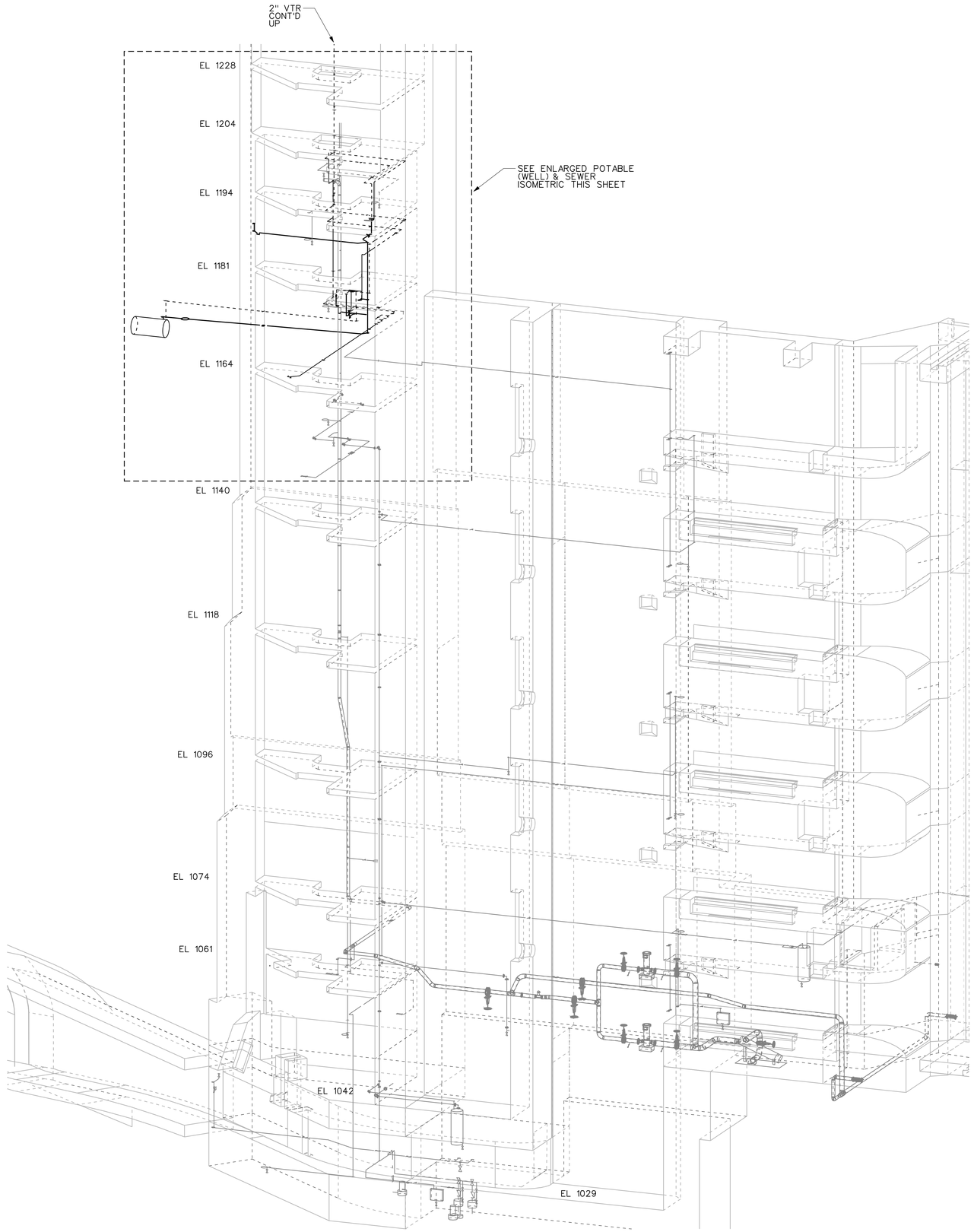

PUMPED DOMESTIC (WELL) & SEWER ISOMETRIC

NOT TO SCALE

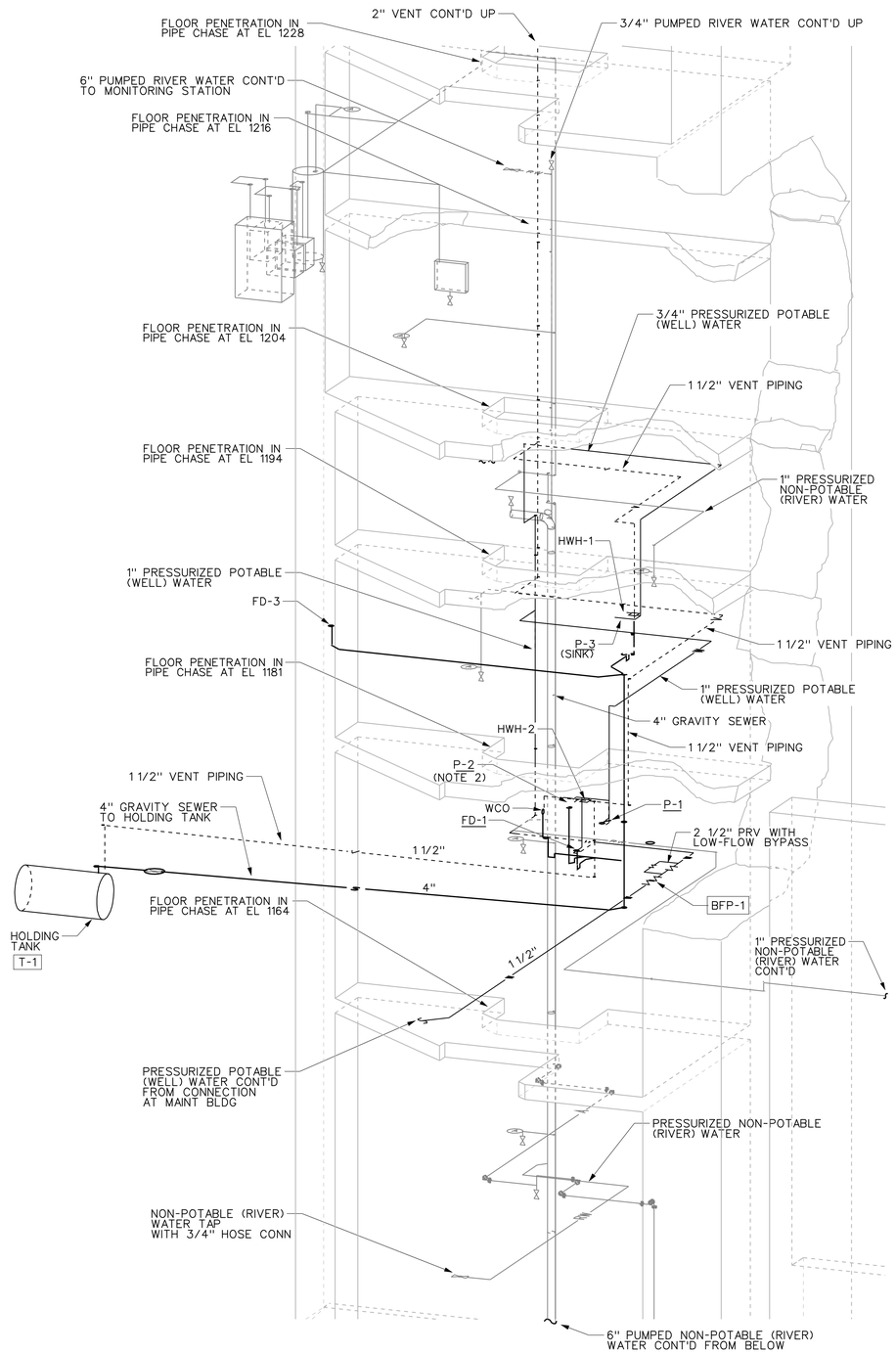

ENLARGED DOMESTIC (WELL) & SEWER ISOMETRIC

NOT TO SCALE

NOTES:

1. FOR PLUMBING LEGEND AND ABBREVIATION SEE PLATE M-001.
FOR PLUMBING SCHEDULES SEE PLATE P-601.

2. PROVIDE HOSE BIBB (3/4") BENEATH SINK.

US Army Corps of Engineers
Seattle District

Symbol	Description	Appr.	Date
			/ /

Designed by:	DJB
Drawn by:	DJB
Checked by:	
Date:	16 MAR 06
File #	E-56-14-19
Rev.	

U.S. ARMY ENGINEER DISTRICT, SEATTLE
CORPS OF ENGINEERS
SEATTLE, WASHINGTON
Prepared by:

ADDITIONAL WATER STORAGE PROJECT
HOWARD HANSON DAM
GREEN RIVER WASHINGTON

PUMPED DOMESTIC WATER & SEWER ISOMETRIC

Plate number:
P-007
Sheet of

DESIGN FILE: I:\AECDESIGNS\HHAWP\Plumbing\HHAWP-007007.DGN
DATE AND TIME PLOTTED: 07-AUG-2008 11:22

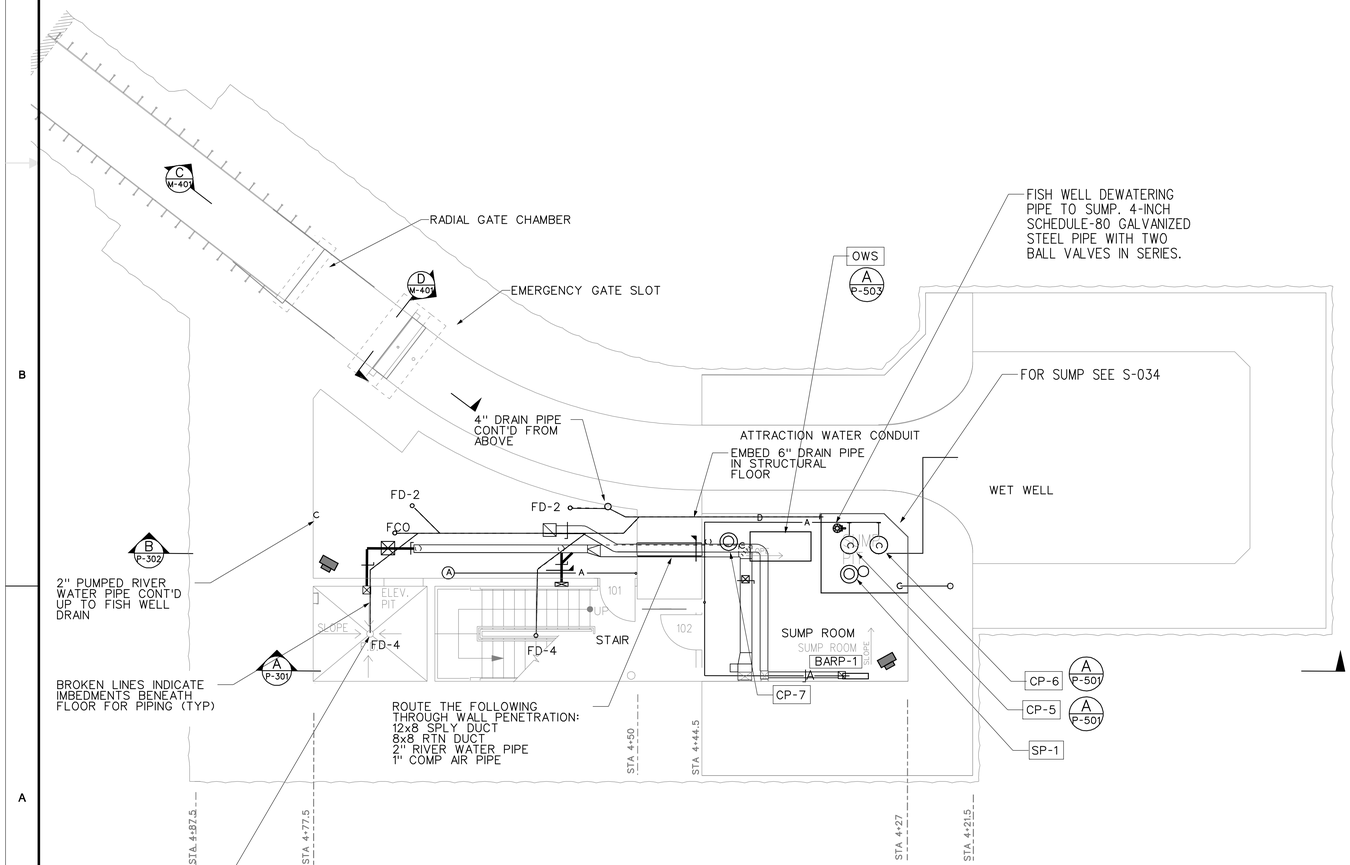

FIRST FLOOR PLUMBING PLAN EL: 1029.00

3/16" = 1'-0" 5' 0 5' 10'

NOTES:

1. FOR DUCT AND OTHER UTILITIES SHOWN IN GREY TONE, REFER TO SHEETS M-101 THRU M-113.

US Army Corps of Engineers
Seattle District

Symbol	Description	Date	Appr.	Symbol	Description
		/ /			

Designed by: DJB, EC
Drawn by: DJB, EC
Checked by:
Date: 16 MAR 06
File: E-56-14-19
Rev.

U.S.ARMY ENGINEER DISTRICT,SEATTLE
CORPS OF ENGINEERS
SEATTLE, WASHINGTON
Prepared by:

ADDITIONAL WATER STORAGE PROJECT
HOWARD HANSON DAM
PLUMBING PLAN EL 1029
GREEN RIVER WASHINGTON

Plate number: P-101
Sheet of

DESIGN FILE: J:\AECDESIGNS\HHAWP-10\PP1.DGN
DATE AND TIME PLOTTED: 07-AUG-2008 11:23

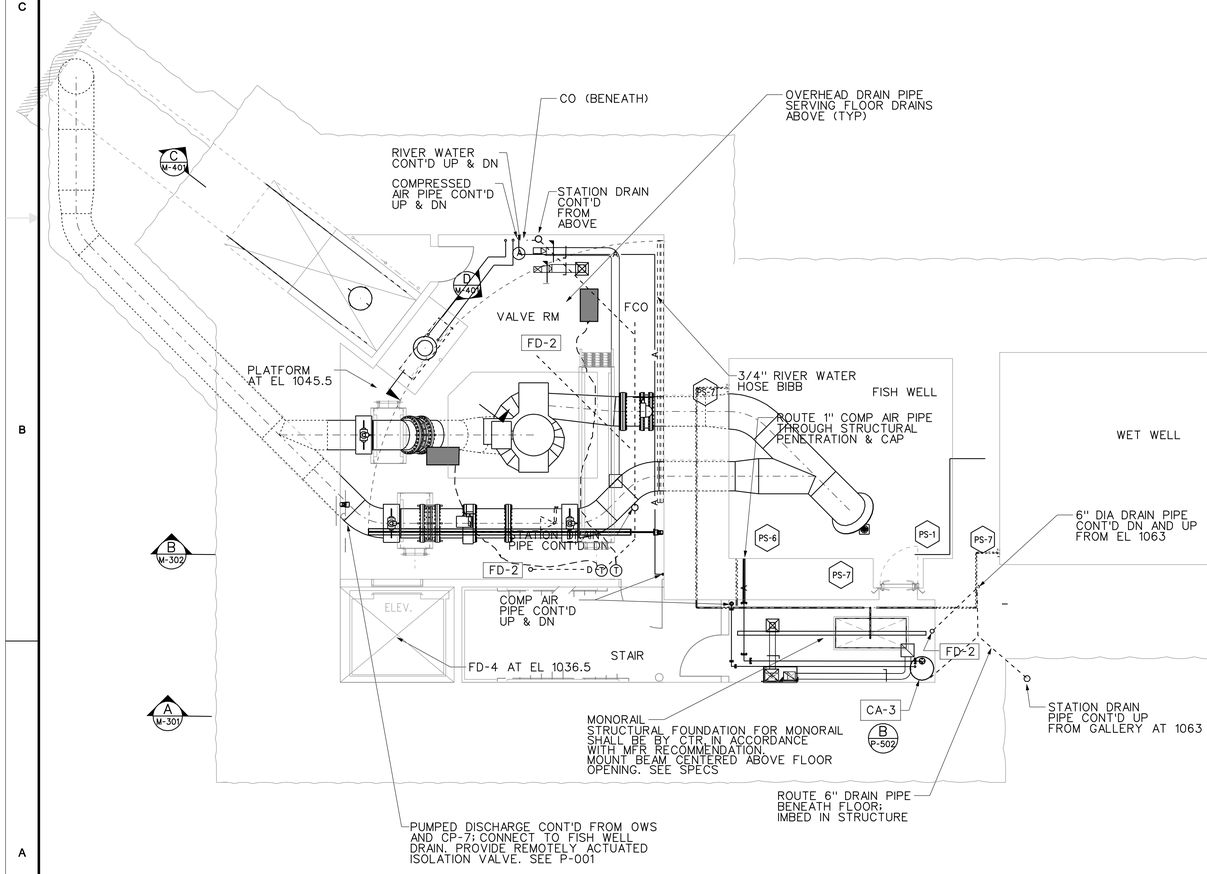

SECOND FLOOR PLUMBING PLAN EL: 1042.00

3/16" = 1'-0" 5' 0 5' 10'

NOTES:

1. FOR DUCT AND OTHER UTILITIES SHOWN IN GREY TONE, REFER TO SHEETS M-101 THRU M-113.

US Army Corps of Engineers
Seattle District

Symbol	Description	Date	Appr.	Symbol	Description
		/ /			

Designed by: DJB, EC
Drawn by: DJB, EC
Checked by:
Date: 16 MAR 06
File • E-56-14-19
Rev.

U.S.ARMY ENGINEER DISTRICT,SEATTLE
CORPS OF ENGINEERS
SEATTLE, WASHINGTON
Prepared by:

ADDITIONAL WATER STORAGE PROJECT
HOWARD HANSON DAM
GREEN RIVER WASHINGTON

PLUMBING PLAN EL 1042

Plate number: P-102
Sheet of

DATE AND TIME PLOTTED: 07-AUG-2008 11:23 DESIGN FILE: I:\AECDESIGNS\HHAWP\Plumbing\HHAWP-102PP2.DGN

NOTES:

1. FOR DUCT AND OTHER UTILITIES SHOWN IN GREY TONE, REFER TO SHEETS M-101 THRU M-113.

2. ITEMS SHOWN WITH BROKEN LINES ( ) INDICATE MECHANICAL ITEMS THAT ARE IMBEDDED BENEATH ELEVATION 1061.5.

3. FOR BREATHING AIR RESPIRATORY PROTECTOR SEE DETAIL ON P-502.

4. FOR PUMPS SEE DETAIL ON P-501.

5. SEAL ALL AIR SHAFT PENETRATIONS TO PREVENT AIR EXCHANGE; SEE DETAIL ON PLATE P-502XXXX

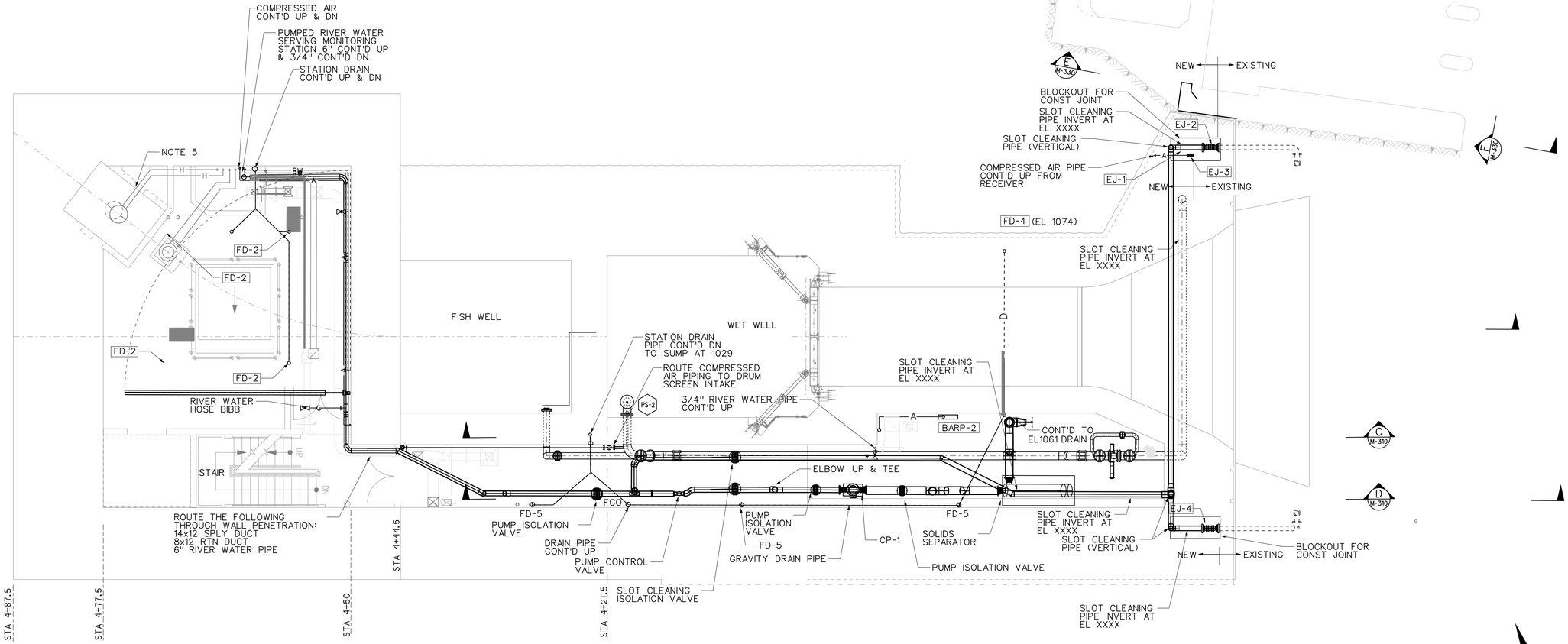

FOURTH FLOOR PLUMBING PLAN EL: 1061.53

3/16" = 1'-0" 5' 0 5' 10'

US Army Corps of Engineers
Seattle District

Symbol	Description	Date	Appr.	Symbol	Description
		/ /			

Date: 16 MAR 06
File: E-56-14-19
Rev.

Designed by: DJB, EC
Drawn by: DJB, EC
Checked by: DJB

U.S.ARMY ENGINEER DISTRICT,SEATTLE
CORPS OF ENGINEERS
SEATTLE, WASHINGTON
Prepared by:

ADDITIONAL WATER STORAGE PROJECT
HOWARD HANSON DAM
WASHINGTON

PLUMBING PLAN EL 1061.5

GREEN RIVER

Plate number: P-103
Sheet of

DESIGN FILE: J:\AECDESIGNS\HHAWP-103PP3.DGN
DATE AND TIME PLOTTED: 07-AUG-2008 11:24
J:\AECDESIGNS\HHAWP-103PP3.DGN

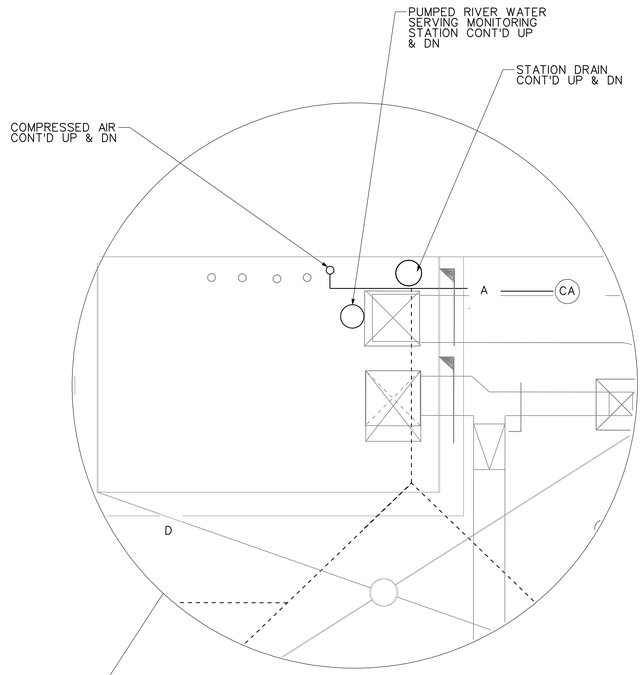

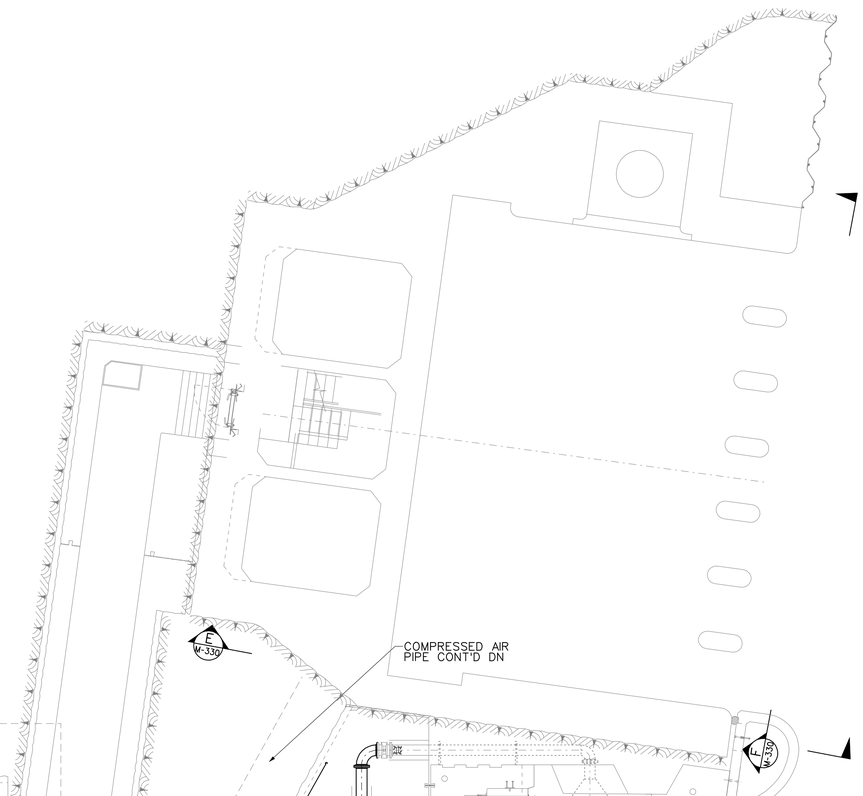

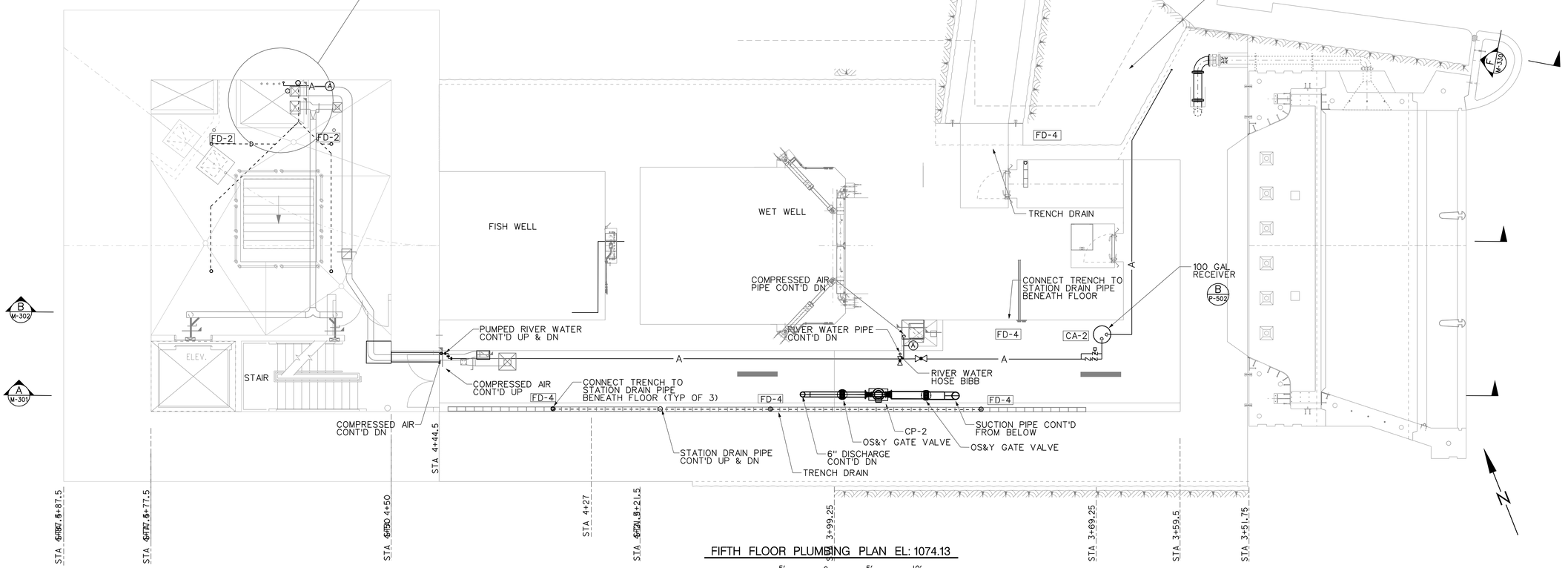

FIFTH FLOOR PLUMBING PLAN EL: 1074.13

3/16" = 1'-0" (5' 0 5' 10')

NOTES:

1. FOR DUCT AND OTHER UTILITIES SHOWN IN GREY TONE, REFER TO SHEETS M-101 THRU M-113.

US Army Corps of Engineers
Seattle District

Symbol	Description	Appr.	Date
			/ /

Date: 16 MAR 06
File • E-56-14-19
Rev.
Designed by: DJB
Drawn by: DJB
Checked by: DJB

U.S.ARMY ENGINEER DISTRICT,SEATTLE
CORPS OF ENGINEERS
SEATTLE, WASHINGTON
Prepared by:

ADDITIONAL WATER STORAGE PROJECT
HOWARD HANSON DAM
PLUMBING PLAN
EL 1074
GREEN RIVER WASHINGTON

Plate number:
P-104
Sheet of

DATE AND TIME PLOTTED: 07-AUG-2008 11:25 DESIGN FILE: I:\AECDESIGNS\HHAWP\Plumbing\HHAWP-104PP4.DGN

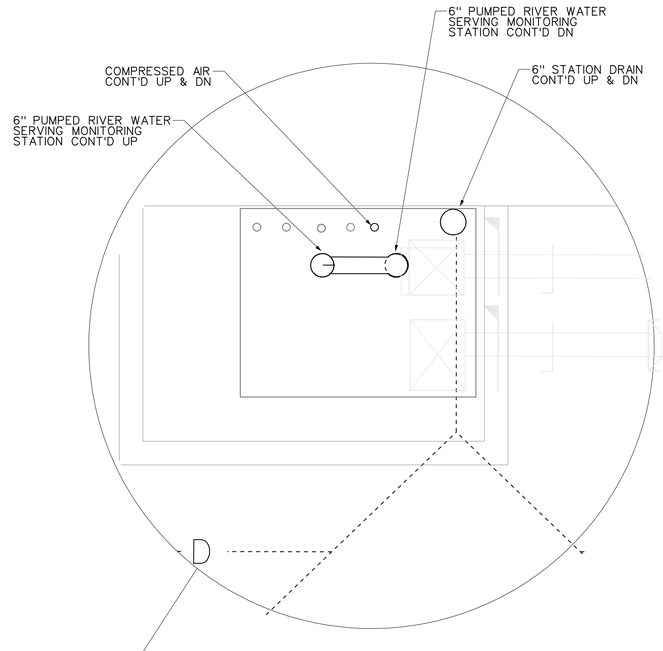

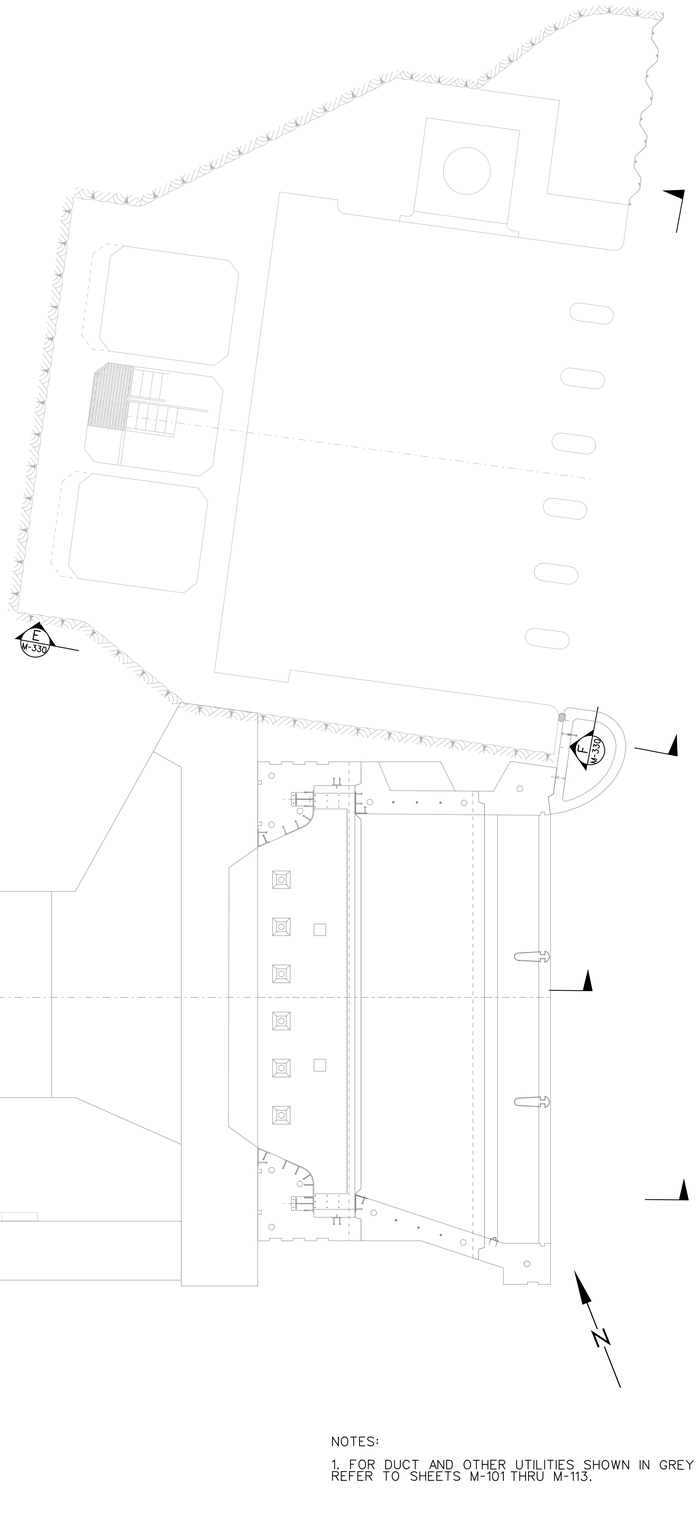

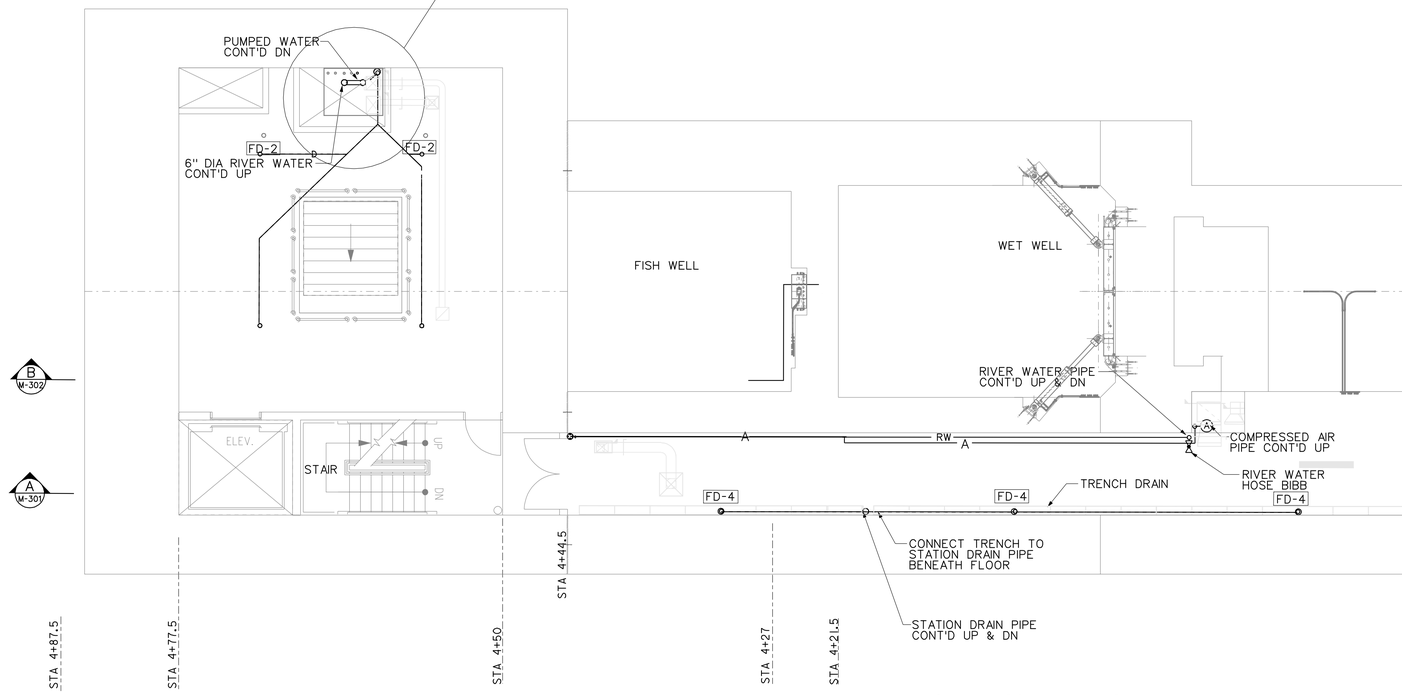

SIXTH FLOOR PLUMBING PLAN EL: 1096.09

3/16" = 1'-0" 5' 0 5' 10'

NOTES:

1. FOR DUCT AND OTHER UTILITIES SHOWN IN GREY TONE, REFER TO SHEETS M-101 THRU M-113.

US Army Corps of Engineers
Seattle District

Symbol	Description	Date	Appr.	Symbol	Description
		/ /			

Designed by: DJB
Drawn by: DJB
Checked by:
Date: 16 MAR 06
File: E-56-14-19
Rev.

U.S.ARMY ENGINEER DISTRICT,SEATTLE
CORPS OF ENGINEERS
SEATTLE, WASHINGTON
Prepared by:

ADDITIONAL WATER STORAGE PROJECT
HOWARD HANSON DAM
PLUMBING PLAN
EL 1096
GREEN RIVER WASHINGTON

Plate number:
P-105
Sheet of

DATE AND TIME PLOTTED: 07-AUG-2008 11:25
DESIGN FILE: I:\AECDESIGNS\HHAW\Plumbing\HHAWP-105pp5.DGN

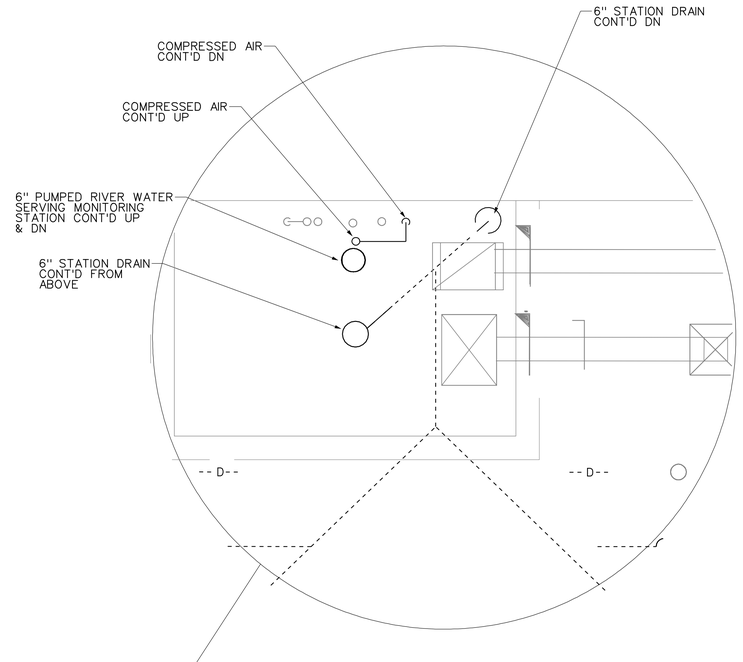

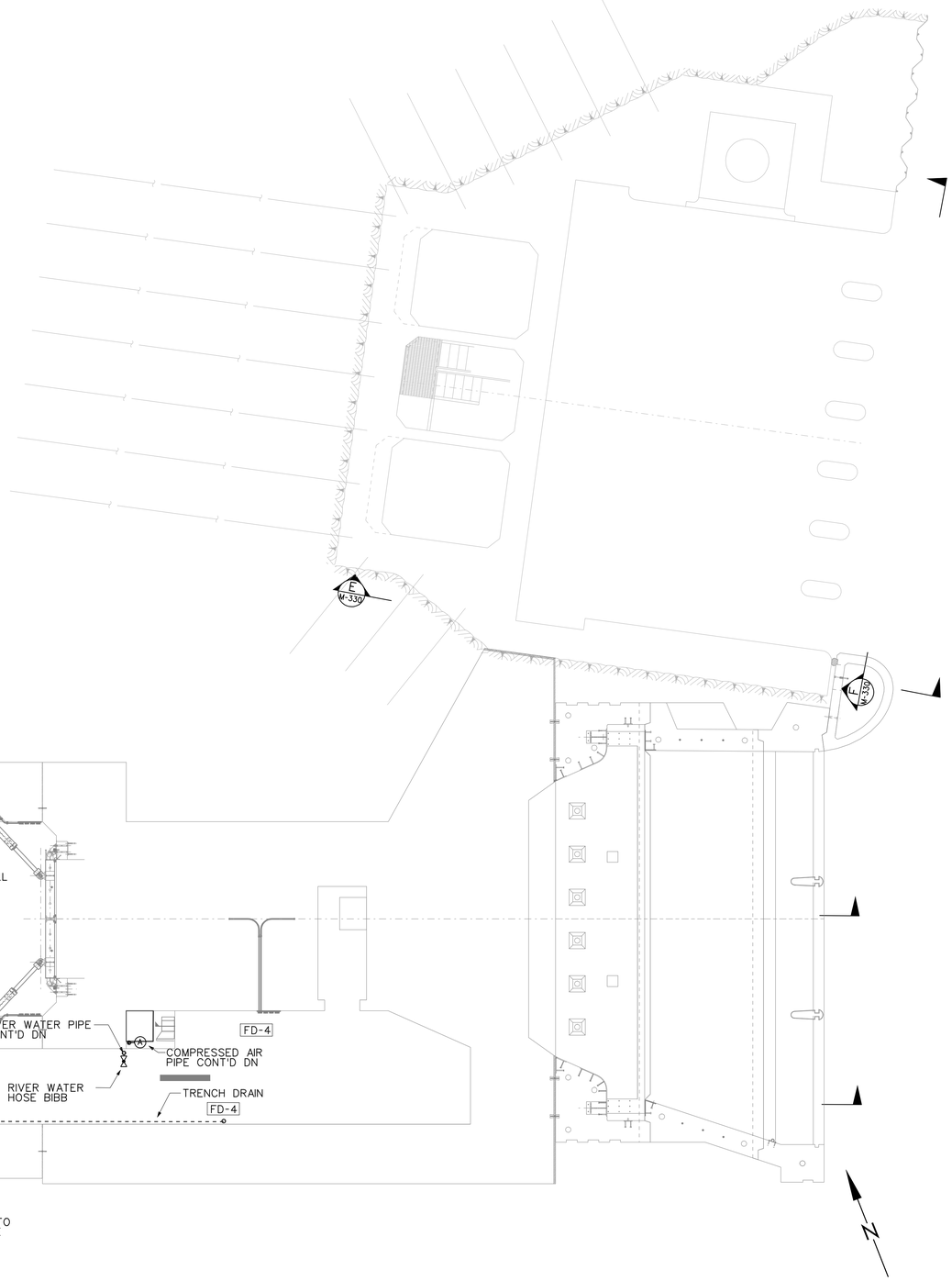

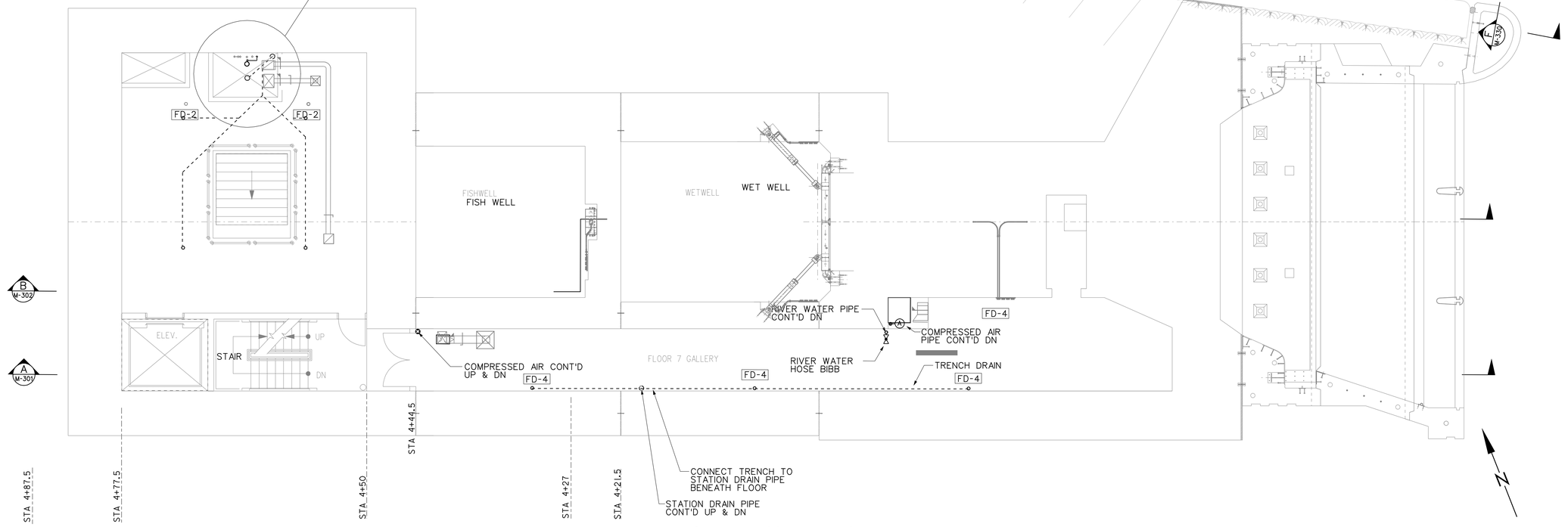

SEVENTH FLOOR PLUMBING PLAN EL: 1118.05

3/16" = 1'-0" 5' 0 5' 10'

NOTES:

1. FOR DUCT AND OTHER UTILITIES SHOWN IN GREY TONE, REFER TO SHEETS M-101 THRU M-113.

US Army Corps of Engineers
Seattle District

Symbol	Description	Date	Appr.	Symbol	Description
		/ /			

Designed by: DJB
Drawn by: DJB
Checked by:
Date: 16 MAR 06
File: E-56-14-19
Rev.

U.S.ARMY ENGINEER DISTRICT, SEATTLE
CORPS OF ENGINEERS
SEATTLE, WASHINGTON
Prepared by:

ADDITIONAL WATER STORAGE PROJECT
HOWARD HANSON DAM
PLUMBING PLAN
EL 1118
GREEN RIVER WASHINGTON

Plate number:
P-106
Sheet of

DATE AND TIME PLOTTED: 07-AUG-2008 11:03 DESIGN FILE: I:\AECDESIGNS\HHAW\Plumbing\HHAWP-106PP6.DGN

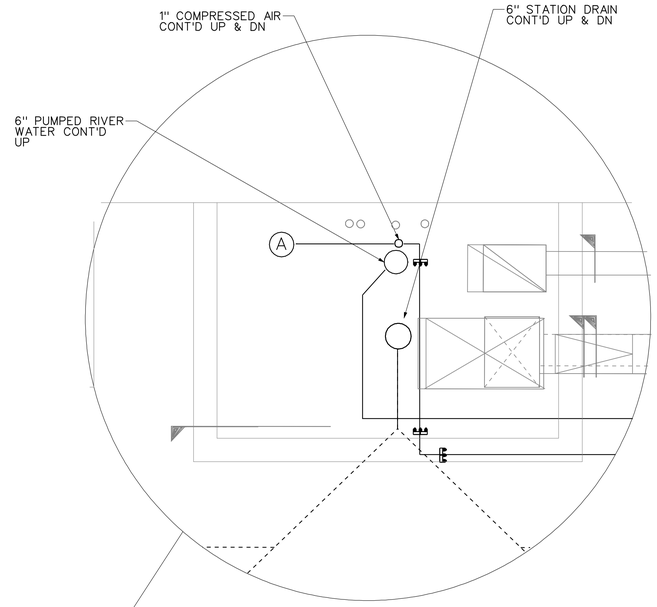

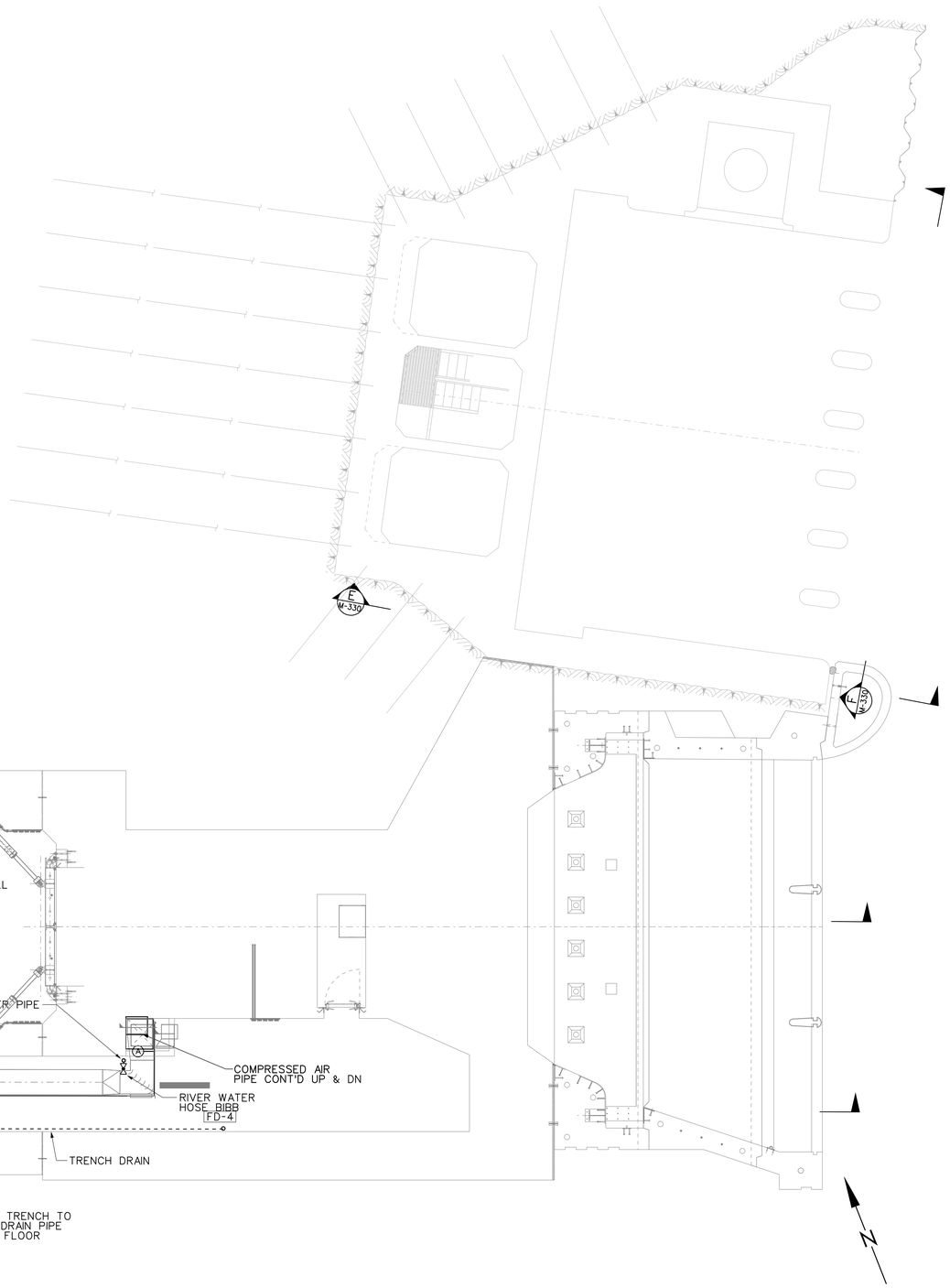

EIGHTH FLOOR PLUMBING PLAN EL: 1140

3/16" = 1'-0" 5' 0 5' 10'

NOTES:

1. FOR DUCT AND OTHER UTILITIES SHOWN IN GREY TONE, REFER TO SHEETS M-101 THRU M-113.

US Army Corps of Engineers
Seattle District

Symbol	Description	Date	Appr.	Symbol	Description
		/ /			

Designed by: DJB
Drawn by: DJB
Checked by:
Date: 16 MAR 06
File • E-56-14-19
Rev.

U.S.ARMY ENGINEER DISTRICT,SEATTLE
CORPS OF ENGINEERS
SEATTLE, WASHINGTON
Prepared by:

ADDITIONAL WATER STORAGE PROJECT
HOWARD HANSON DAM
PLUMBING PLAN
EL 1140
GREEN RIVER WASHINGTON

Plate number:
P-107
Sheet of

DATE AND TIME PLOTTED: 07-AUG-2008 11:27
DESIGN FILE: I:\AECDESIGNS\HHAW\Plumbing\HHAWP-107PP7.DGN

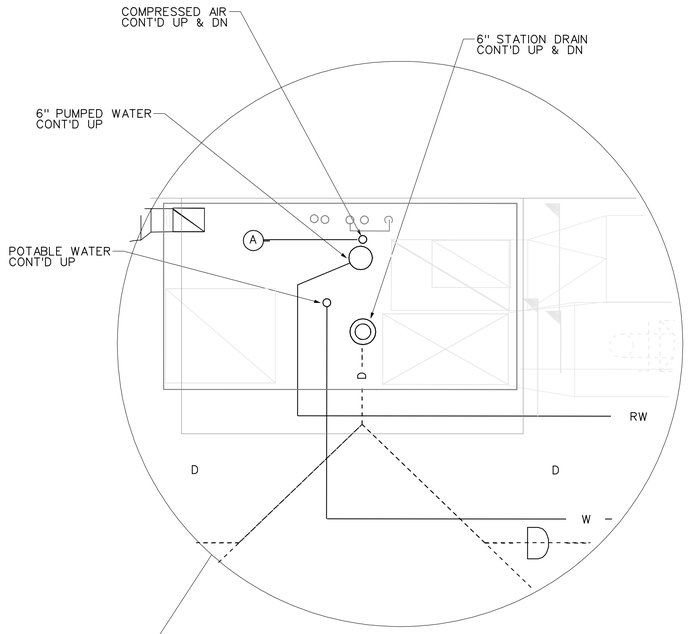

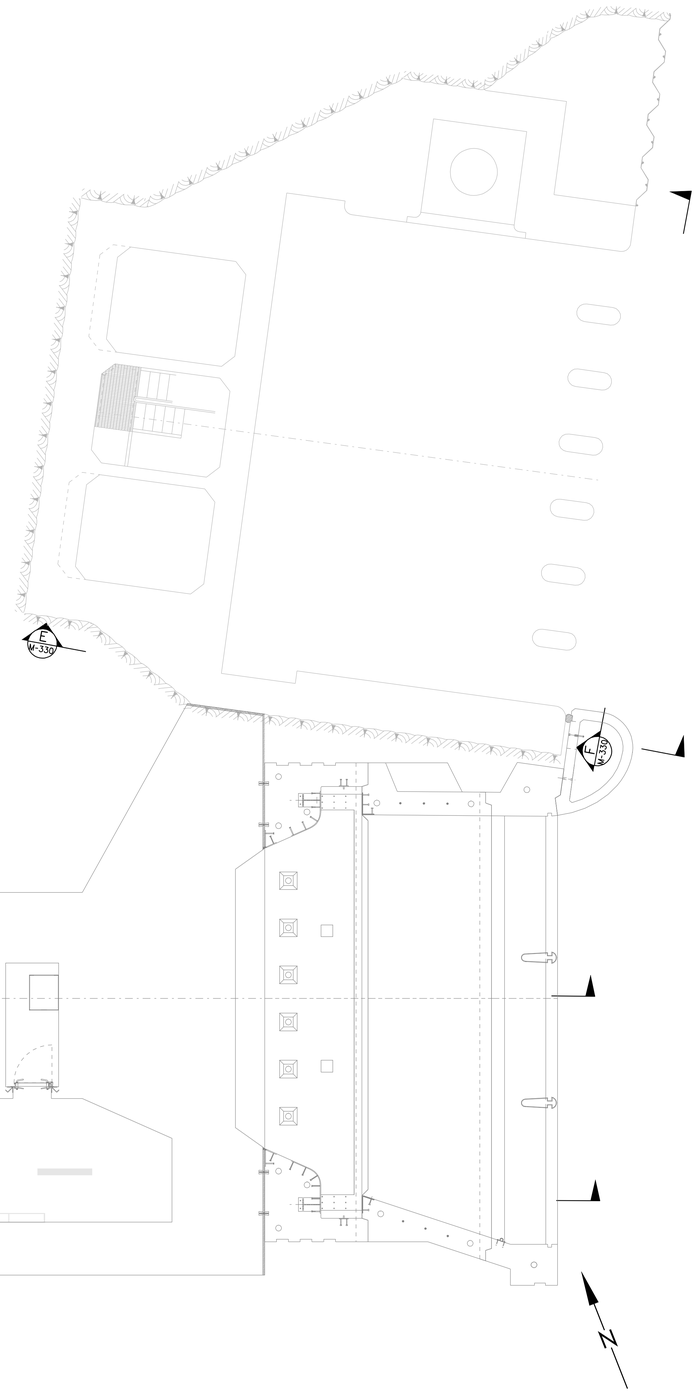

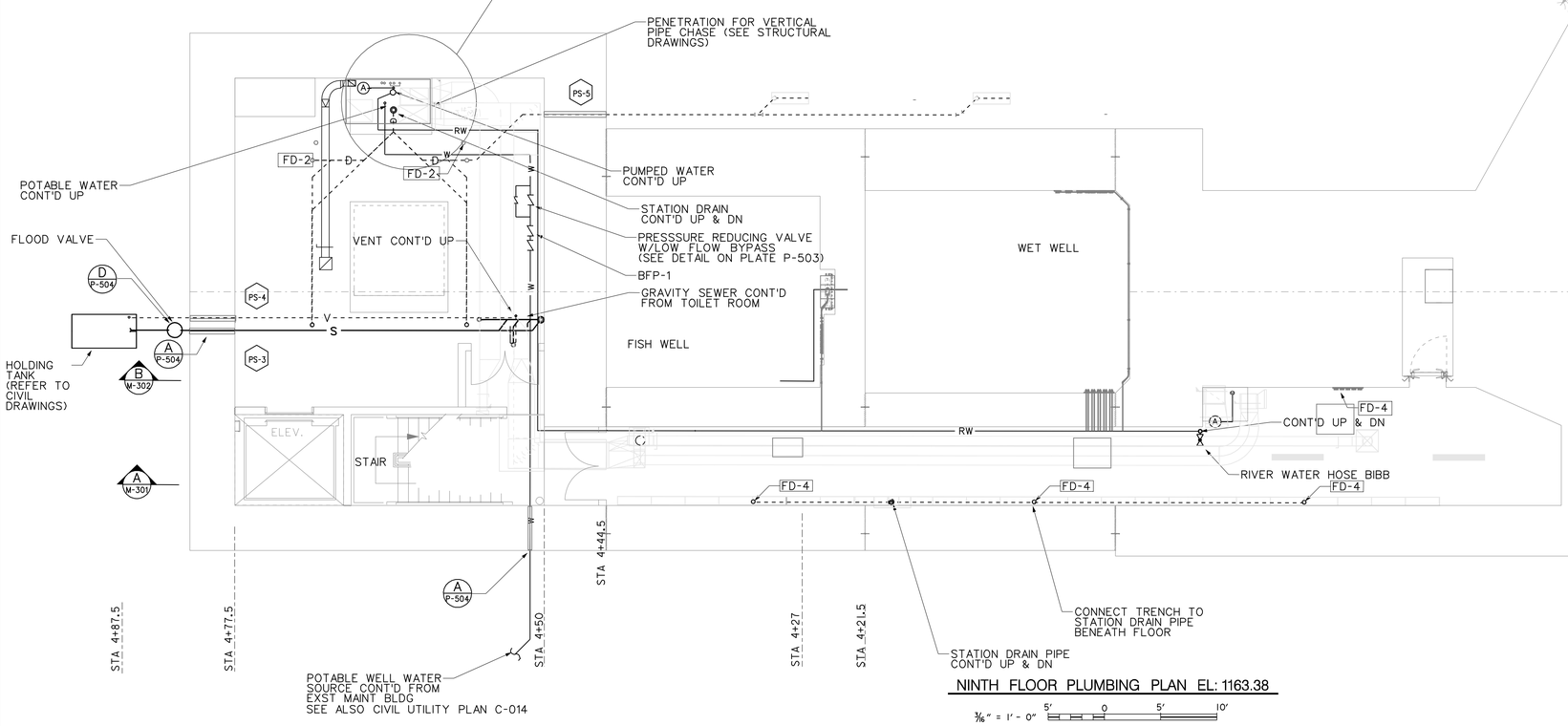

NINTH FLOOR PLUMBING PLAN EL: 1163.38

3/16" = 1'-0" 5' 0 5' 10'

NOTES:

1. FOR DUCT AND OTHER UTILITIES SHOWN IN GREY TONE, REFER TO SHEETS M-101 THRU M-113.
2. FOR PIPE SIZES SEE PLATE P-XXX

US Army Corps of Engineers
Seattle District

Symbol	Description	Date	Appr.	Symbol	Description
		/ /			

Date: 16 MAR 06
File: E-56-14-19
Designed by: DJB
Drawn by: DJB
Checked by:
Rev.

U.S.ARMY ENGINEER DISTRICT,SEATTLE
CORPS OF ENGINEERS
SEATTLE, WASHINGTON
Prepared by:

ADDITIONAL WATER STORAGE PROJECT
HOWARD HANSON DAM
PLUMBING PLAN
EL 1163
GREEN RIVER WASHINGTON

Plate number:
P-108
Sheet of

DATE AND TIME PLOTTED: 07-AUG-2008 11:27
DESIGN FILE: J:\AECDESIGNS\HHAW\Plumbing\HHAWP-108PP8.DGN

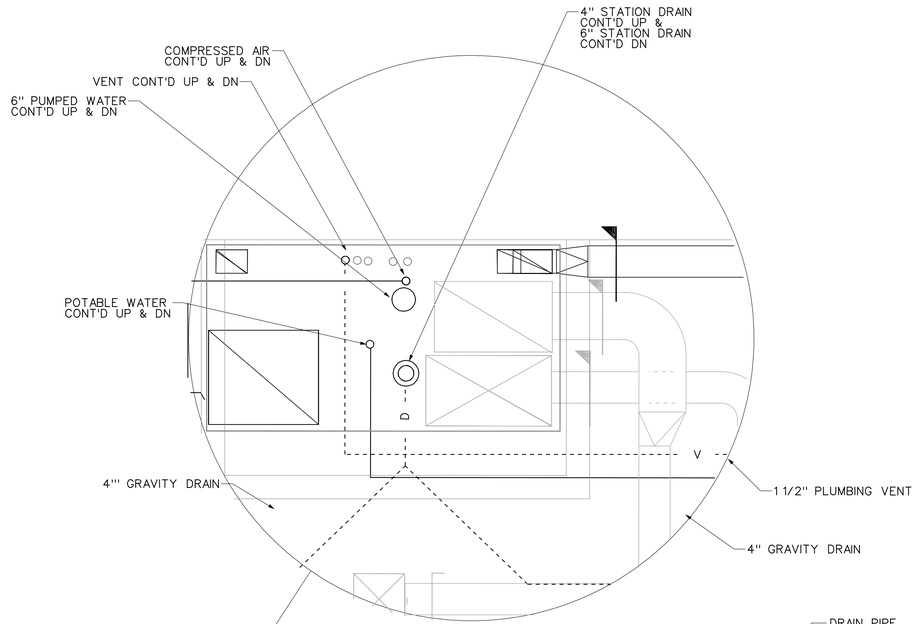

TENTH FLOOR PLUMBING PLAN EL: 1181.00

3/16" = 1'-0" 5' 0 5' 10'

NOTES:

1. FOR DUCT AND OTHER UTILITIES SHOWN IN GREY TONE, REFER TO SHEETS M-101 THRU M-113.

US Army Corps of Engineers
Seattle District

Symbol	Description	Date	Appr.	Symbol	Description
		/ /			

Designed by: DJB
Drawn by: DJB
Checked by:
Date: 16 MAR 06
File: E-56-14-19
Rev.

U.S.ARMY ENGINEER DISTRICT,SEATTLE
CORPS OF ENGINEERS
SEATTLE, WASHINGTON
Prepared by:

ADDITIONAL WATER STORAGE PROJECT
HOWARD HANSON DAM
PLUMBING PLAN
EL 1181
GREEN RIVER WASHINGTON

Plate number:
P-109
Sheet of

DESIGN FILE: I:\AECDESIGNS\HHAWP-109PP9.DGN
DATE AND TIME PLOTTED: 07-AUG-2008 11:28

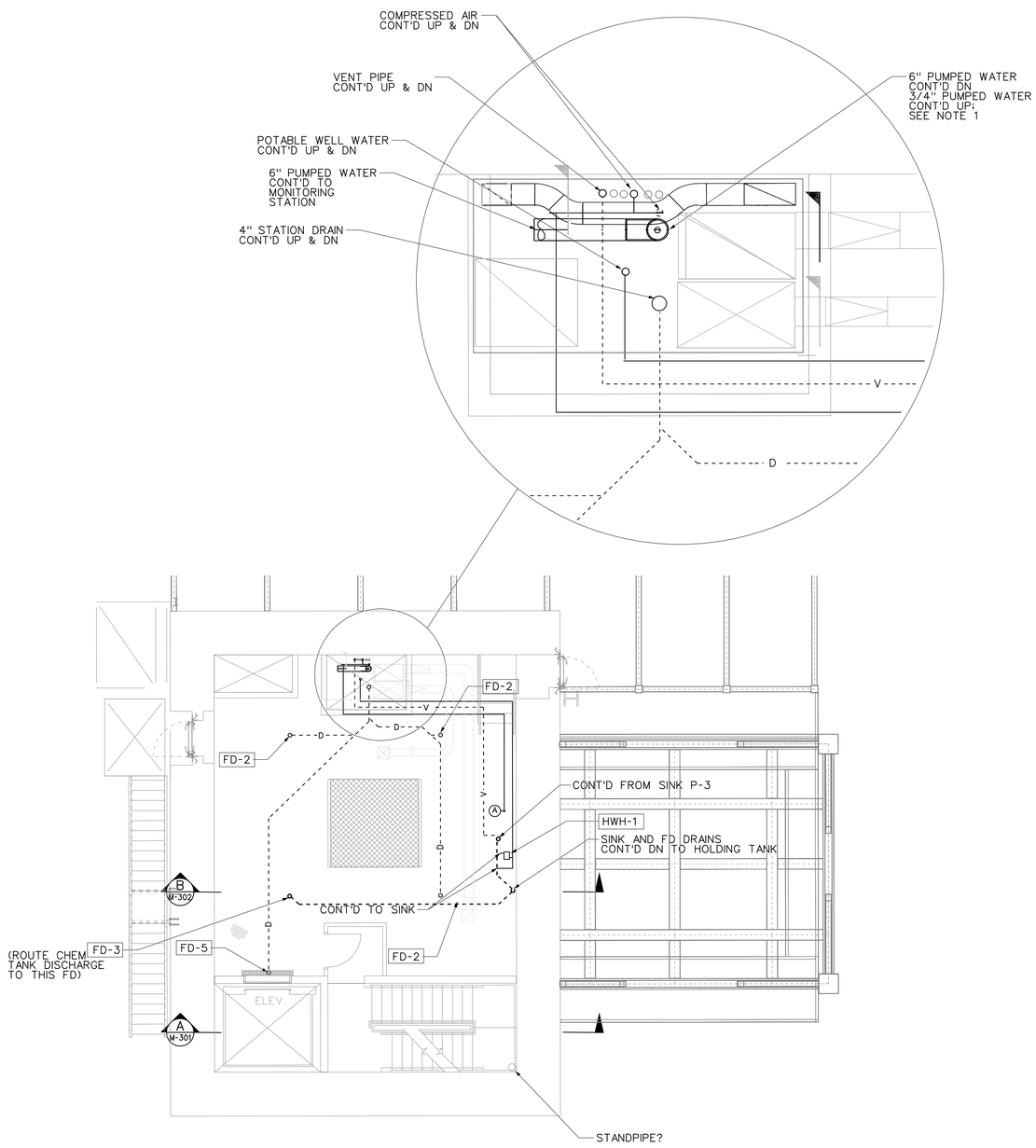

ELEVENTH FLOOR PLUMBING PLAN EL: 1194

3/16" = 1'-0" 5' 0 5' 10'

NOTES:

1. FOR DUCT AND OTHER UTILITIES SHOWN IN GREY TONE, REFER TO SHEETS M-101 THRU M-113.

US Army Corps of Engineers
Seattle District

Symbol	Description	Date	Appr.	Symbol	Description
		/ /			

U.S.ARMY ENGINEER DISTRICT,SEATTLE
CORPS OF ENGINEERS
SEATTLE, WASHINGTON
Prepared by:

Designed by: DJB
Drawn by: DJB
Checked by:
Date: 16 MAR 06
File # E-56-14-19
Rev.

ADDITIONAL WATER STORAGE PROJECT
HOWARD HANSON DAM
PLUMBING PLAN
EL 1194
GREEN RIVER WASHINGTON

Plate number: P-110
Sheet of

DATE AND TIME PLOTTED: 07-AUG-2008 11:28
DESIGN FILE: P:\AECDESIGNS\HHAW\Plumbing\HHAWP-110P10.DGN

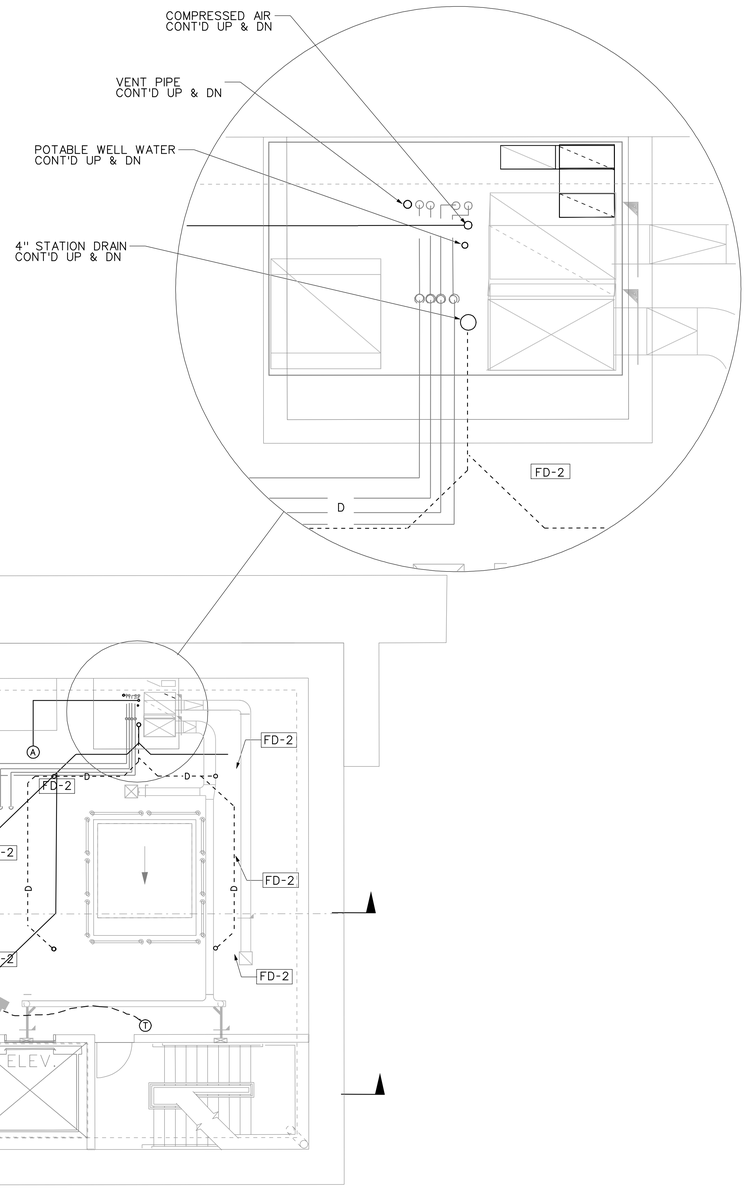

TWELTH FLOOR PLUMBING PLAN EL: 1204

3/16" = 1'-0" 5' 0 5' 10'

NOTES:

1. FOR DUCT AND OTHER UTILITIES SHOWN IN GREY TONE, REFER TO SHEETS M-101 THRU M-113.

US Army Corps of Engineers
Seattle District

Symbol	Description	Appr.	Symbol	Description	Date
					/ /

Designed by:
Drawn by:
Checked by:
Prepared by:

Date: 16 MAR 06
File: E-56-14-19
Rev.

U.S.ARMY ENGINEER DISTRICT,SEATTLE
CORPS OF ENGINEERS
SEATTLE, WASHINGTON

ADDITIONAL WATER STORAGE PROJECT
HOWARD HANSON DAM
PLUMBING PLAN
EL 1204
GREEN RIVER WASHINGTON

Plate number:
P-111
Sheet of

DATE AND TIME PLOTTED: 07-AUG-2008 11:29
DESIGN FILE: J:\AECDESIGNS\HHAW\Plumbing\HHAWP-111P11.DGN

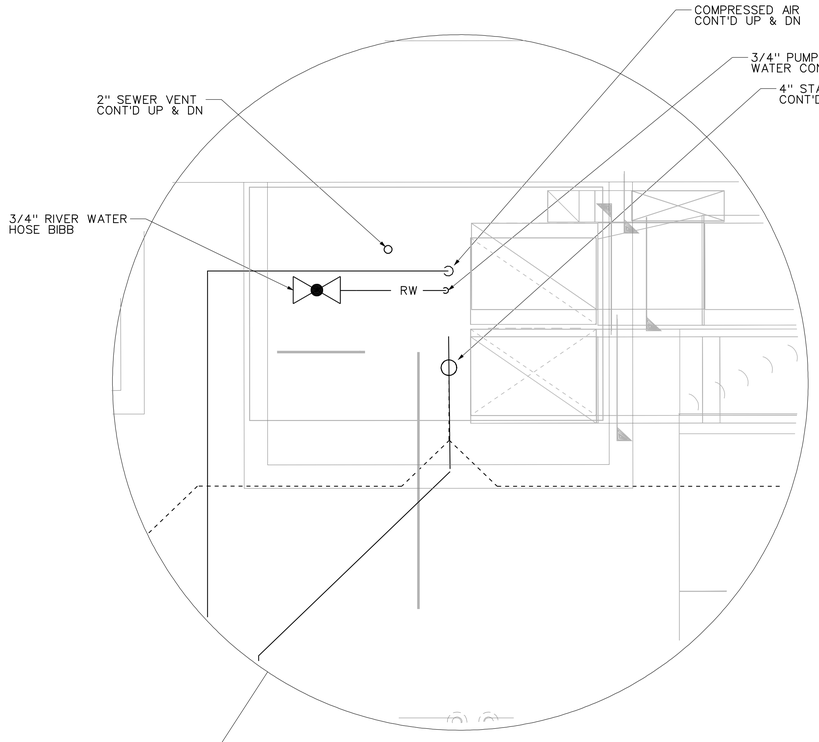

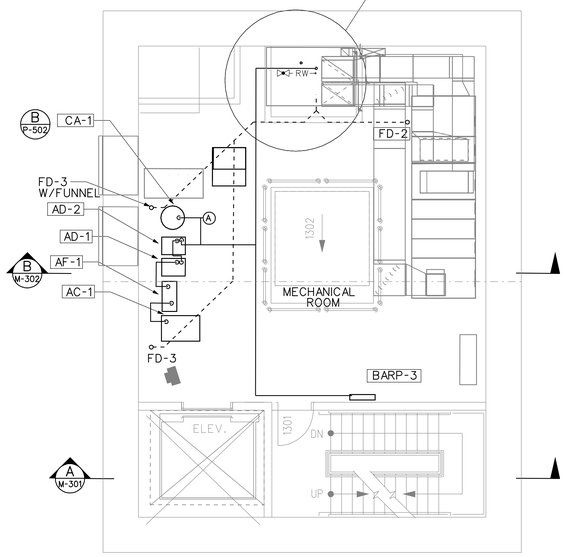

NOTE: SEE M-404 FOR ENLARGED MECHANICAL ROOM PLAN.

THIRTEENTH FLOOR PLUMBING PLAN EL: 1216

3/8" = 1'-0" 5' 0 5' 10'

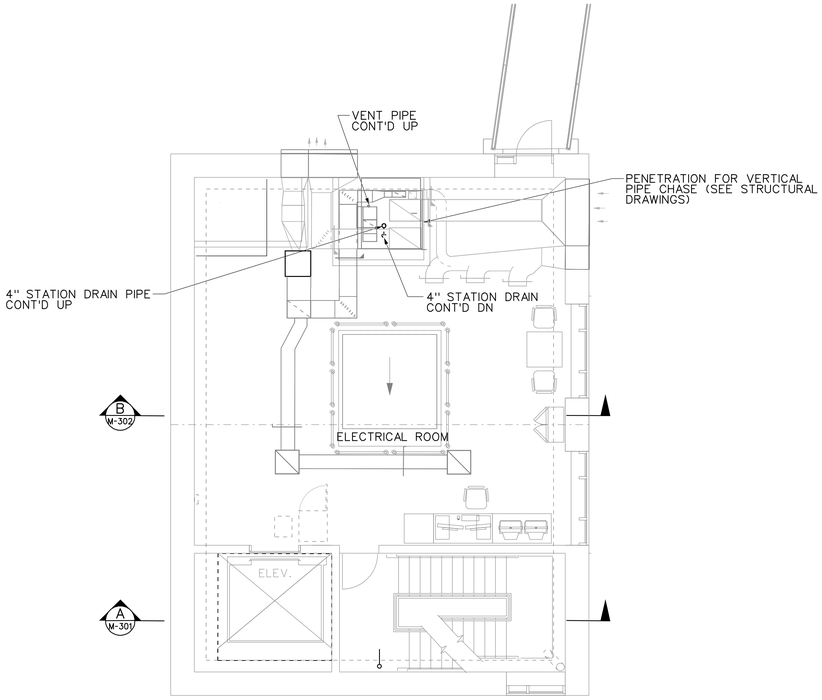

FOURTEENTH FLOOR PLUMBING PLAN EL: 1228

3/8" = 1'-0" 5' 0 5' 10'

NOTES:

1. FOR DUCT AND OTHER UTILITIES SHOWN IN GREY TONE, REFER TO SHEETS M-101 THRU M-113.

US Army Corps of Engineers
Seattle District

Symbol	Description	Date	Appr.	Symbol	Description
		/ /			

U.S.ARMY ENGINEER DISTRICT,SEATTLE
CORPS OF ENGINEERS
SEATTLE, WASHINGTON
Prepared by:

Designed by: DJB
Drawn by: DJB
Checked by:
Date: 16 MAR 06
File * E-56-14-19
Rev.

ADDITIONAL WATER STORAGE PROJECT
HOWARD HANSON DAM
PLUMBING PLANS
EL 1216, 1228
GREEN RIVER WASHINGTON

Plate number:
P-112
Sheet of

DATE AND TIME PLOTTED: 07-AUG-2008 11:29
DESIGN FILE: I:\AECDESIGNS\HHAW\Plumbing\HHAWP-112P12.DGN

PEDESTRIAN BRIDGE (BEYOND)

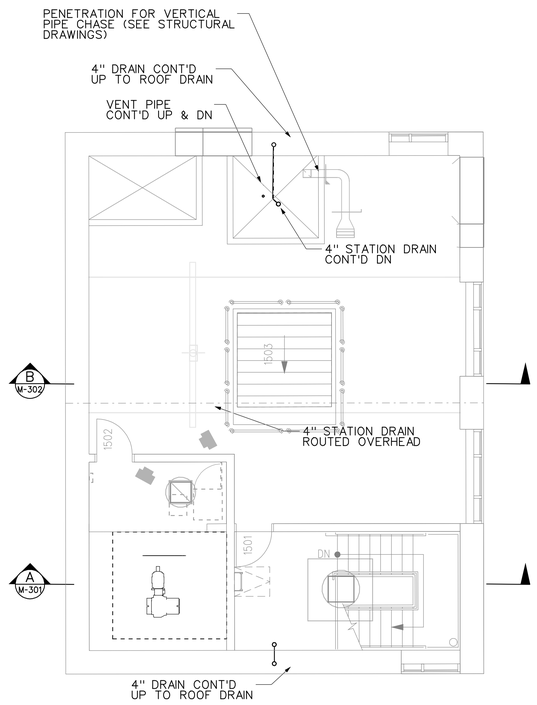

FIFTEENTH FLOOR PLUMBING PLAN EL: 1245

3/16" = 1'-0" 5' 0 5' 10'

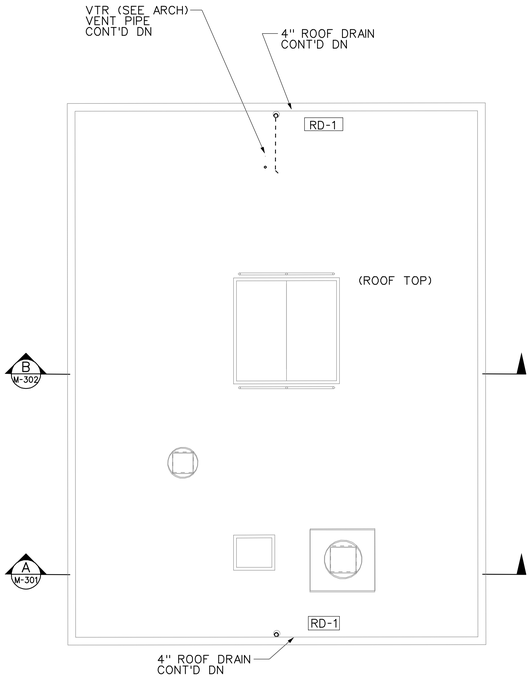

ROOF MECHANICAL PLAN EL: 1257

3/16" = 1'-0" 5' 0 5' 10'

NOTES:

1. FOR DUCT AND OTHER UTILITIES SHOWN IN GREY TONE, REFER TO SHEETS M-101 THRU M-113.

US Army Corps of Engineers
Seattle District

Symbol	Description	Date	Appr.	Symbol	Description
		/ /			

Designed by: DJB
Drawn by:
Checked by: DJB
Date: 16 MAR 06
File • E-56-14-19
Rev.

U.S.ARMY ENGINEER DISTRICT,SEATTLE
CORPS OF ENGINEERS
SEATTLE, WASHINGTON
Prepared by:

ADDITIONAL WATER STORAGE PROJECT
HOWARD HANSON DAM
PLUMBING PLAN
EL 1245, 1257
GREEN RIVER WASHINGTON

Plate number:
P-113
Sheet of

DATE AND TIME PLOTTED: 07-AUG-2008 11:30 DESIGN FILE: I:\AECDESIGNS\HHAW\Plumbing\HHAWP-113P13.DGN

MATCH LINE SEE P-302

EL 1140.01'
FLOOR 8

EL 1118.05'
FLOOR 7

EL 1096.09'
FLOOR 6

EL 1074.13'
FLOOR 5

EL 1061.53'
FLOOR 4

EL 1054.00'

EL 1042.00'
FLOOR 2

EL 1029.00'
FLOOR 1

EL 1021.00'
BOTTOM OF EXCAVATION

DRAIN, TYP
DRAIN PIPE
DRAIN, TYP
DRAIN PIPE
DRAIN PIPE
DRAIN, TYP

CA
6" PUMPED RIVER WATER PIPE
3/4" RIVER WATER PIPE
6" PUMPED RIVER WATER PIPE
CONTROL VALVE
CP-2
8" PUMPED RIVER WATER PIPE
CA
GATE VALVE, TYP
CP-X
DRAIN PIPE
BARP-X
X
CP-1
DRAIN PIPE
DRAIN PIPE
COMPRESSED AIR
DRAIN PIPE
DRAIN PIPE
DRAIN PIPE
PUMPS

A P-308

D P-304

STA 4+94.76
STA 4+87.5
STA 4+44.5
STA 4+21.5

PLUMBING GALLERY PROFILE I

SCALE: 3/16 " = 1'-0"

3/16" = 1'-0" 5' 0 5' 10'

A M-101 THRU M-113

US Army Corps of Engineers
Seattle District

Symbol	Description	Appr.	Date
			/ /

Designed by: DJB, EC
Drawn by: DJB, EC
Checked by:
Prepared by:

Date: 16 MAR 06
File: E-56-14-19
Rev.

U.S.ARMY ENGINEER DISTRICT, SEATTLE
CORPS OF ENGINEERS
SEATTLE, WASHINGTON

ADDITIONAL WATER STORAGE PROJECT
HOWARD HANSON DAM
PLUMBING GALLERY PROFILE I
GREEN RIVER WASHINGTON

Plate number: P-301
Sheet of

DESIGN FILE: I:\AECDESIGNS\HHAW\Plumbing\HHAWP-301EL1.DGN
DATE AND TIME PLOTTED: 07-AUG-2008 11:31

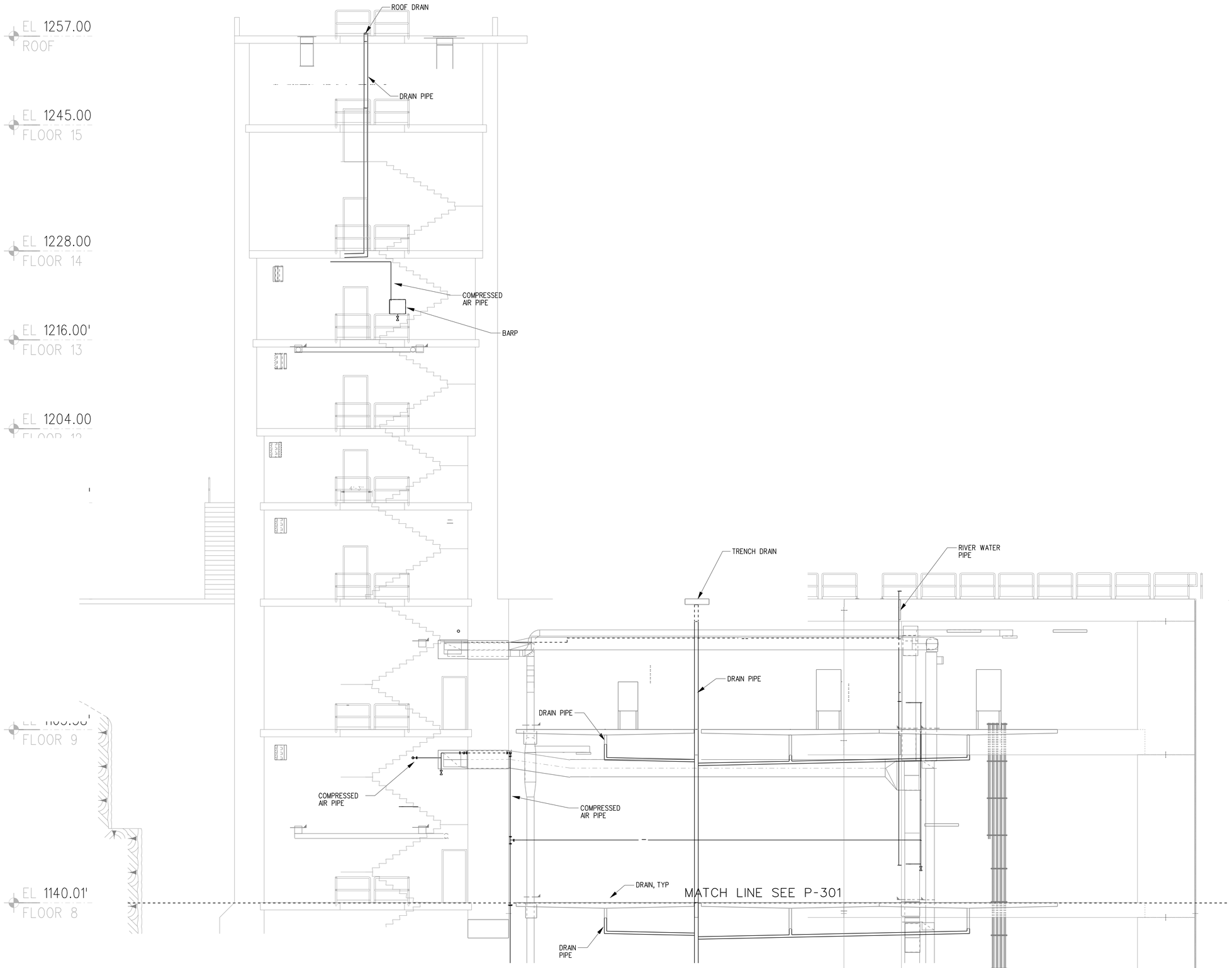

PLUMBING GALLERY PROFILE II

SCALE: 3/16 " = 1'-0"

3/8" = 1' - 0"

A M-101 THRU M-113

US Army Corps of Engineers
Seattle District

Symbol	Description	Appr.	Date
			/ /

Designed by: DJB,EC
Drawn by: DJB,EC
Checked by:
Date: 16 MAR 06
File # E-56-14-19
Rev.

U.S.ARMY ENGINEER DISTRICT,SEATTLE
CORPS OF ENGINEERS
SEATTLE, WASHINGTON
Prepared by:

ADDITIONAL WATER STORAGE PROJECT
HOWARD HANSON DAM
GREEN RIVER WASHINGTON

PLUMBING GALLERY
PROFILE II

Plate number: P-302
Sheet of

DATE AND TIME PLOTTED: 07-AUG-2008 11:31
DESIGN FILE: I:\AECDESIGNS\HHAWP-302EL2.DGN

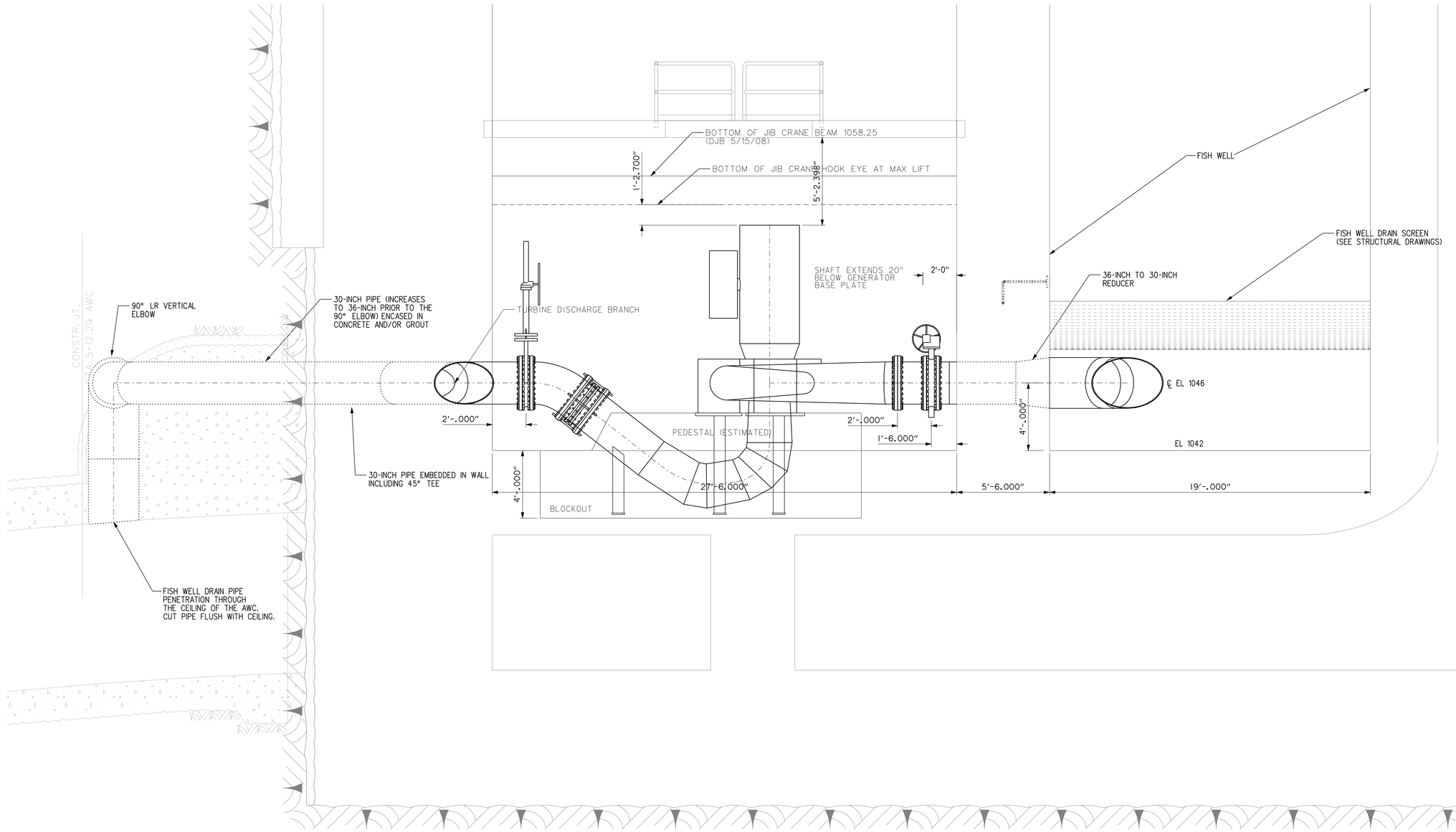

FISH WELL PIPING ELEVATION DETAIL

X
P-XXX

3/8" = 1' - 0" 12"6"0 1' 2' 3' 4' 5' 6' 7'

NOTES:

1. ALL FISH WELL PIPING SHALL BE GALVANIZED STEEL PIPING. PIPE THAT IS 10-INCHES IN SIZE AND SMALLER SHALL BE SCHEDULE 80. PIPE THAT IS OVER 10-INCHES IN SIZE SHALL HAVE A MINIMUM WALL THICKNESS OF 1/2-INCH.

US Army Corps of Engineers
Seattle District

Symbol	Description	Appr.	Date
			/ /

U.S.ARMY ENGINEER DISTRICT,SEATTLE
CORPS OF ENGINEERS
SEATTLE, WASHINGTON

Prepared by:

Designed by: EC
Drawn by: EC
Checked by: X

Date: 16 MAR 06
File: E-56-14-19
Rev.

ADDITIONAL WATER STORAGE PROJECT
HOWARD HANSON DAM

FISH WELL PIPING ELEVATION

GREEN RIVER WASHINGTON

Plate number:
P-303
Sheet of

DESIGN FILE: J:\AECDESIGNS\HHAW\Plumbing\HHAWP-303EL3.DGN
DATE AND TIME PLOTTED: 07-AUG-2008 11:32

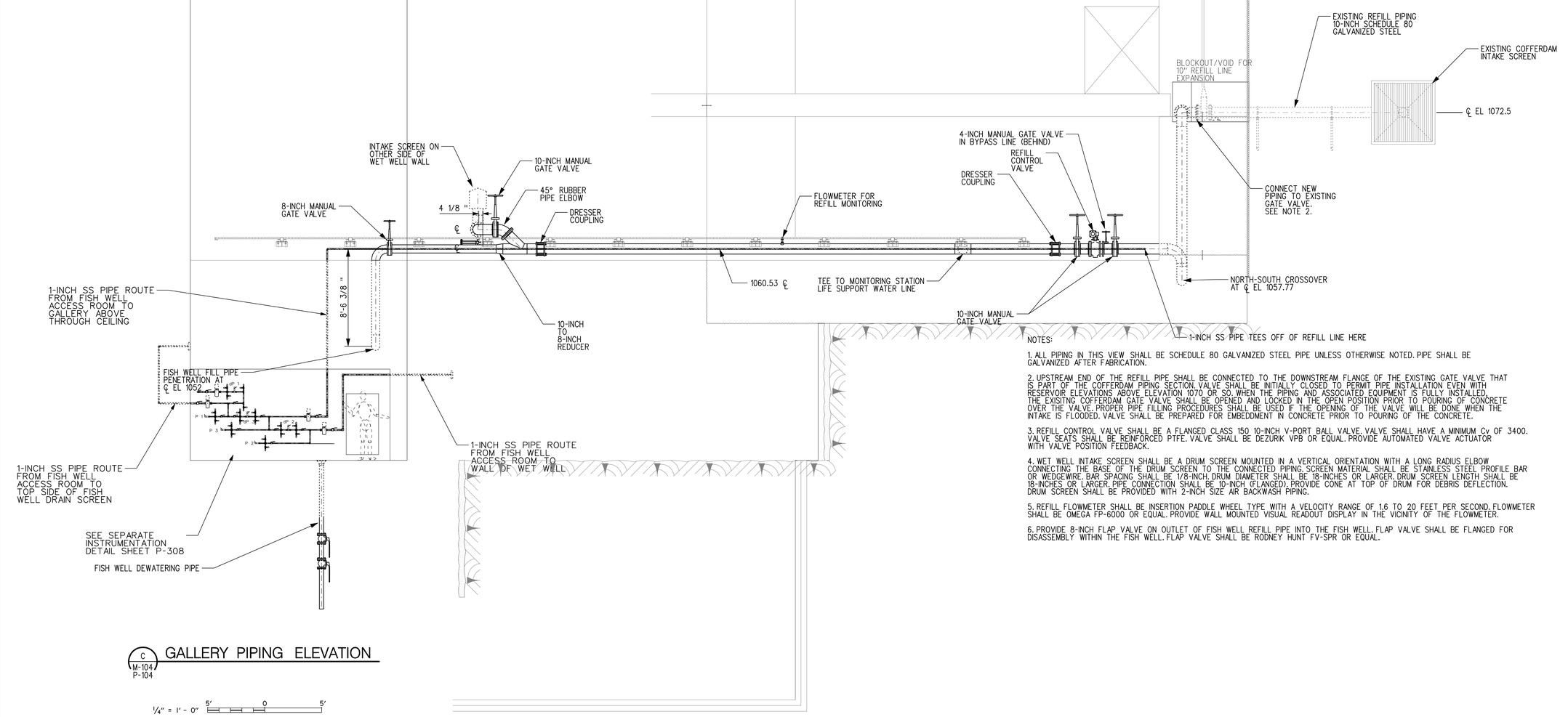

C
M-104
P-104 GALLERY PIPING ELEVATION

1/4" = 1' - 0" 5' 0 5'

NOTES:

1. ALL PIPING IN THIS VIEW SHALL BE SCHEDULE 80 GALVANIZED STEEL PIPE UNLESS OTHERWISE NOTED. PIPE SHALL BE GALVANIZED AFTER FABRICATION.

2. UPSTREAM END OF THE REFILL PIPE SHALL BE CONNECTED TO THE DOWNSTREAM FLANGE OF THE EXISTING GATE VALVE THAT IS PART OF THE COFFERDAM PIPING SECTION. VALVE SHALL BE INITIALLY CLOSED TO PERMIT PIPE INSTALLATION EVEN WITH RESERVOIR ELEVATIONS ABOVE ELEVATION 1070 OR SO. WHEN THE PIPING AND ASSOCIATED EQUIPMENT IS FULLY INSTALLED, THE EXISTING COFFERDAM GATE VALVE SHALL BE OPENED AND LOCKED IN THE OPEN POSITION PRIOR TO POURING OF CONCRETE OVER THE VALVE. PROPER PIPE FILLING PROCEDURES SHALL BE USED IF THE OPENING OF THE VALVE WILL BE DONE WHEN THE INTAKE IS FLOODED. VALVE SHALL BE PREPARED FOR EMBEDDMENT IN CONCRETE PRIOR TO POURING OF THE CONCRETE.

3. REFILL CONTROL VALVE SHALL BE A FLANGED CLASS 150 10-INCH V-PORT BALL VALVE. VALVE SHALL HAVE A MINIMUM Cv OF 3400. VALVE SEATS SHALL BE REINFORCED PTFE. VALVE SHALL BE DEZURIK VPB OR EQUAL. PROVIDE AUTOMATED VALVE ACTUATOR WITH VALVE POSITION FEEDBACK.

4. WET WELL INTAKE SCREEN SHALL BE A DRUM SCREEN MOUNTED IN A VERTICAL ORIENTATION WITH A LONG RADIUS ELBOW CONNECTING THE BASE OF THE DRUM SCREEN TO THE CONNECTED PIPING. SCREEN MATERIAL SHALL BE STAINLESS STEEL PROFILE BAR OR WEDGEWIRE. BAR SPACING SHALL BE 1/8-INCH. DRUM DIAMETER SHALL BE 18-INCHES OR LARGER. DRUM SCREEN LENGTH SHALL BE 18-INCHES OR LARGER. PIPE CONNECTION SHALL BE 10-INCH (FLANGED). PROVIDE CONE AT TOP OF DRUM FOR DEBRIS DEFLECTION. DRUM SCREEN SHALL BE PROVIDED WITH 2-INCH SIZE AIR BACKWASH PIPING.

5. REFILL FLOWMETER SHALL BE INSERTION PADDLE WHEEL TYPE WITH A VELOCITY RANGE OF 1.6 TO 20 FEET PER SECOND. FLOWMETER SHALL BE OMEGA FP-6000 OR EQUAL. PROVIDE WALL MOUNTED VISUAL READOUT DISPLAY IN THE VICINITY OF THE FLOWMETER.

6. PROVIDE 8-INCH FLAP VALVE ON OUTLET OF FISH WELL REFILL PIPE INTO THE FISH WELL. FLAP VALVE SHALL BE FLANGED FOR DISASSEMBLY WITHIN THE FISH WELL. FLAP VALVE SHALL BE RODNEY HUNT FV-SPR OR EQUAL.

US Army Corps of Engineers
Seattle District

Symbol	Description	Appr.	Date
			/ /

Designed by: EC, DJB
Drawn by: EC, AMM
Checked by:
Prepared by:
Date: 16 MAR 06
File: E-56-14-19
Rev.

U.S. ARMY ENGINEER DISTRICT, SEATTLE
CORPS OF ENGINEERS
SEATTLE, WASHINGTON

ADDITIONAL WATER STORAGE PROJECT
HOWARD HANSON DAM
GREEN RIVER WASHINGTON

GALLERY PIPING ELEVATIONS

Plate number: P-304
Sheet of

DESIGN FILE: J:\AECDESIGNS\HHAWP\Plumbing\HHAWP-304EL4.DGN
DATE AND TIME PLOTTED: 07-AUG-2008 11:32

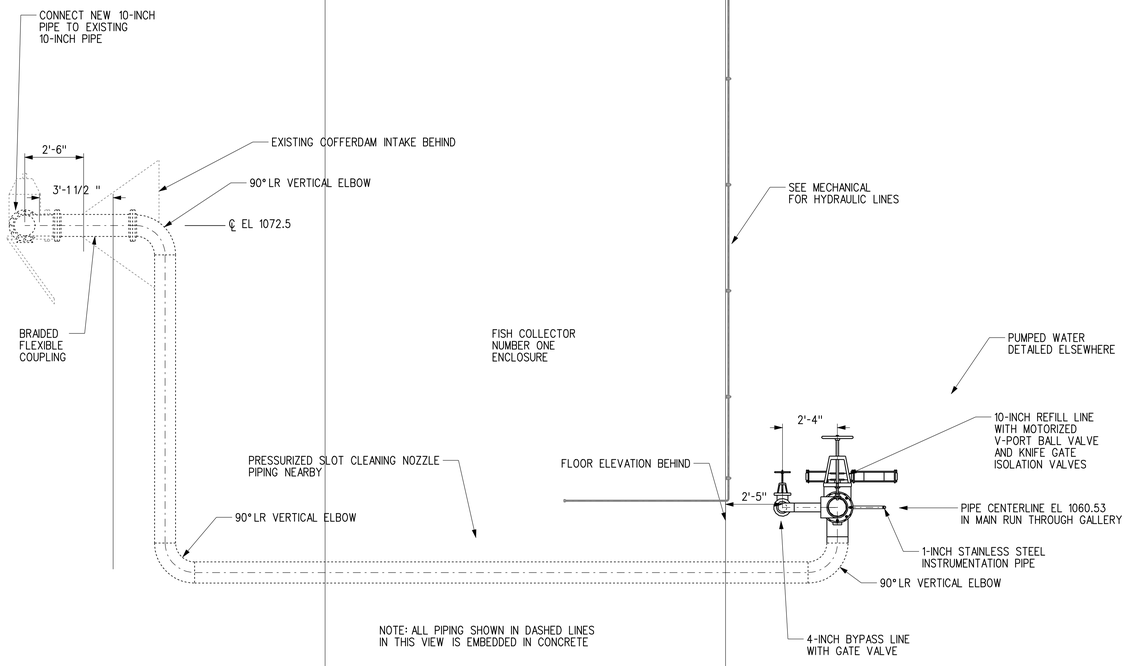

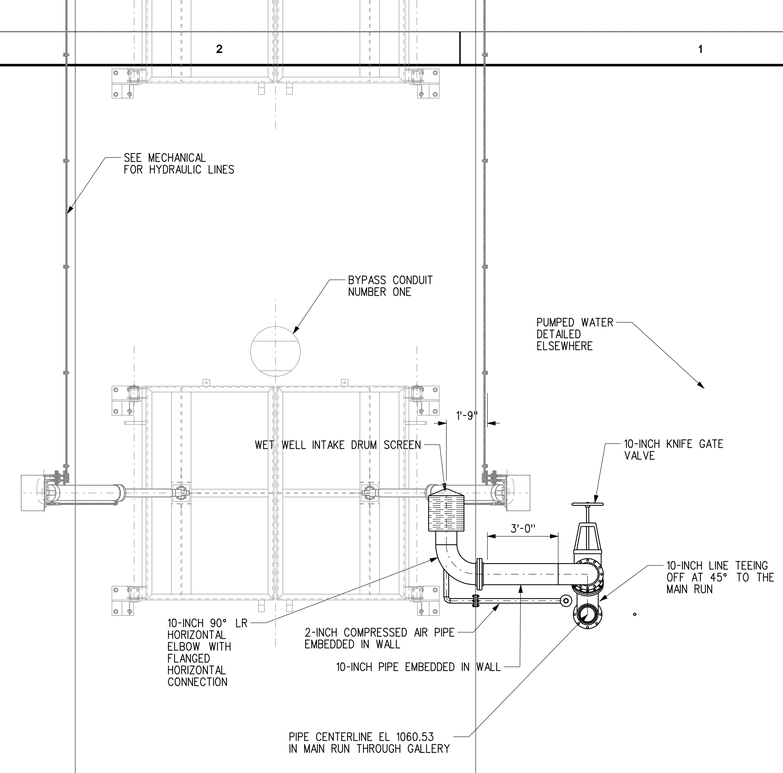

X / P-XXX SECTION

3/8" = 1'-0" 12"6"0 1' 2' 3' 4' 5' 6' 7'

X / P-XXX SECTION

3/8" = 1'-0" 12"6"0 1' 2' 3' 4' 5' 6' 7'

US Army Corps of Engineers
Seattle District

Symbol	Description	Appr.	Date
			/ /

Designed by: EC
Drawn by: EC
Checked by: X
Date: 16 MAR 06
File • E-56-14-19
Rev.

U.S.ARMY ENGINEER DISTRICT,SEATTLE
CORPS OF ENGINEERS
SEATTLE, WASHINGTON
Prepared by:

ADDITIONAL WATER STORAGE PROJECT
HOWARD HANSON DAM
GREEN RIVER WASHINGTON

PIPING SECTIONS

Plate number:
P-305
Sheet of

DESIGN FILE: I:\AECDESIGNS\HHAW\Plumbing\HHAWP-305EL5.DGN
DATE AND TIME PLOTTED: 07-AUG-2008 10:17

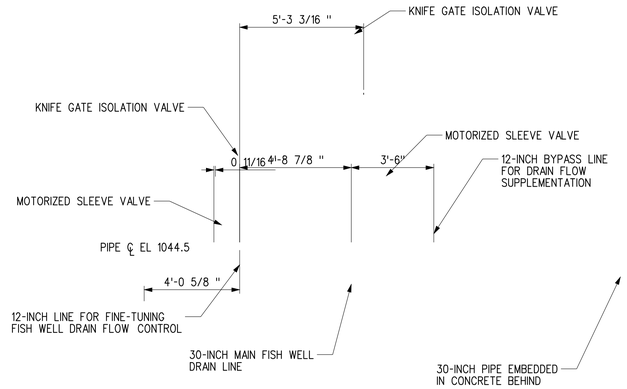

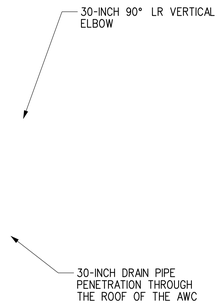

A
P-402
SECTION

3/8" = 1' - 0"
12"6"0 1' 2' 3' 4' 5' 6' 7'

NOTES:

1. ALL FISH WELL PIPING SHALL BE GALVANIZED STEEL PIPING. PIPE THAT IS 10-INCHES IN SIZE AND SMALLER SHALL BE SCHEDULE 80. PIPE THAT IS OVER 10-INCHES IN SIZE SHALL HAVE A MINIMUM WALL THICKNESS OF 1/2-INCH.

US Army Corps of Engineers
Seattle District

Symbol	Description	Date	Appr.	Symbol	Description
		/ /			

Date: 16 MAR 06
File *
Rev. E-56-14-19

Designed by: EC
Drawn by: EC
Checked by: X

U.S.ARMY ENGINEER DISTRICT,SEATTLE
CORPS OF ENGINEERS
SEATTLE, WASHINGTON

Prepared by:

ADDITIONAL WATER STORAGE PROJECT
HOWARD HANSON DAM
GREEN RIVER WASHINGTON

PIPING SECTIONS 2

Plate number:
P-306
Sheet of

FILE* I:\AECDESIGNS\HHAW\Plumbing\HHAWP-306EL6.DGN
DESIGN FILE*
DATE AND TIME PLOTTED: 07-AUG-2008 11:33

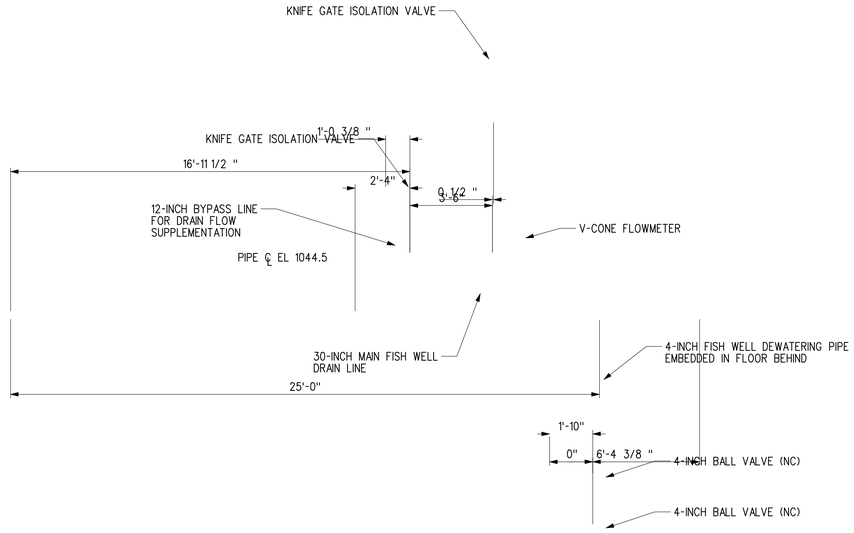

B P-402 SECTION

3/8" = 1' - 0" 12"6"0 1' 2' 3' 4' 5' 6' 7'

NOTES:

1. ALL FISH WELL PIPING SHALL BE GALVANIZED STEEL PIPING. PIPE THAT IS 10-INCHES IN SIZE AND SMALLER SHALL BE SCHEDULE 80. PIPE THAT IS OVER 10-INCHES IN SIZE SHALL HAVE A MINIMUM WALL THICKNESS OF 1/2-INCH.

US Army Corps of Engineers
Seattle District

Symbol	Description	Date	Appr.	Symbol	Description
		/ /			

Designed by: EC
Drawn by: EC
Checked by: X
Date: 16 MAR 06
File # E-56-14-19
Rev.

U.S.ARMY ENGINEER DISTRICT,SEATTLE
CORPS OF ENGINEERS
SEATTLE, WASHINGTON
Prepared by:

ADDITIONAL WATER STORAGE PROJECT
HOWARD HANSON DAM
GREEN RIVER WASHINGTON

PIPING SECTIONS 3

Plate number: P-307
Sheet of

DESIGN FILE: J:\AECDESIGNS\HHAWP\Plumbing\HHAWP-307EL7.DGN
DATE AND TIME PLOTTED: 07-AUG-2008 11:33

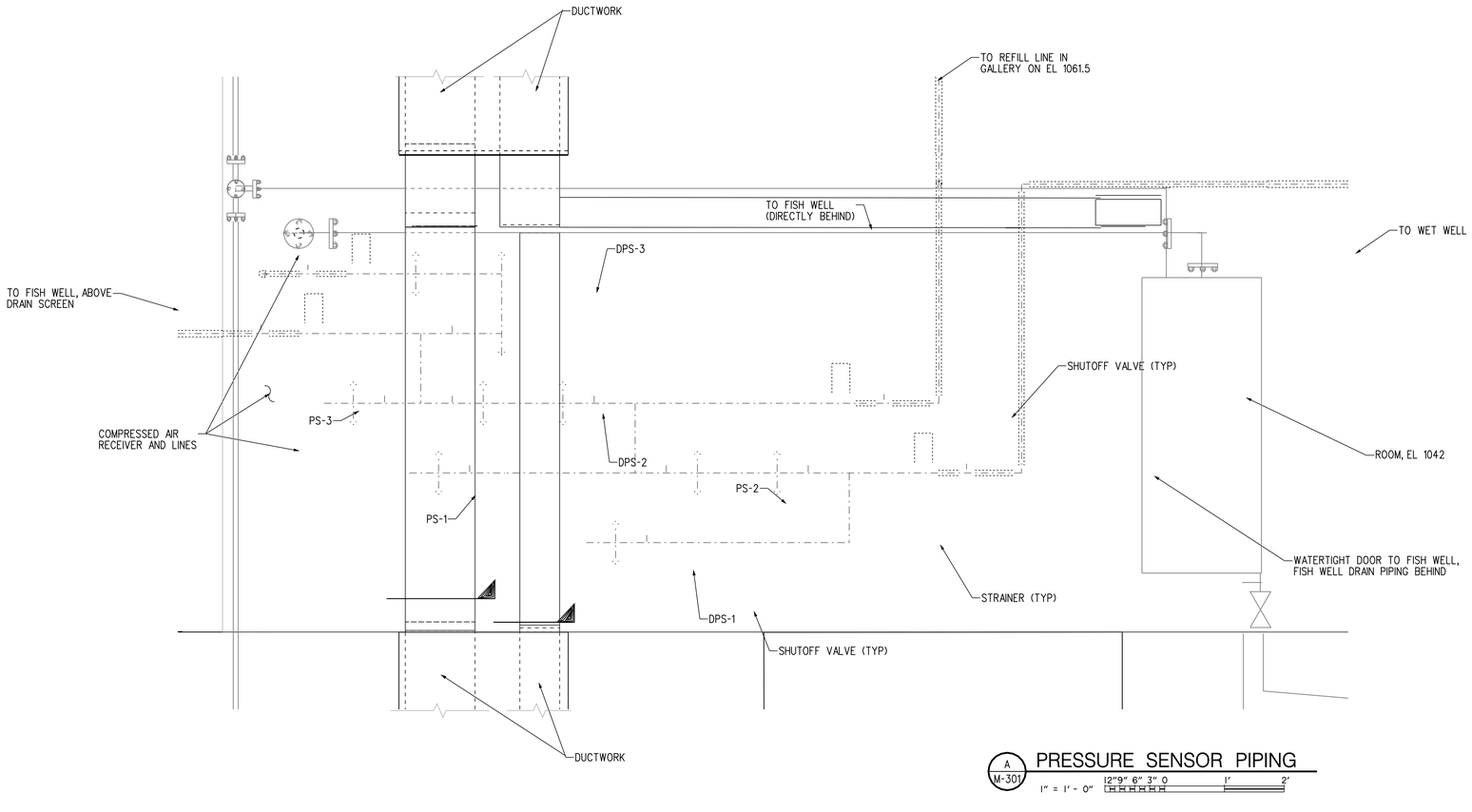

A / M-301 PRESSURE SENSOR PIPING

1" = 1' - 0" 12"9" 6" 3" 0 1' 2'

NOTES:

1. PIPE SHALL BE 1/2 INCH SIZE, EXCEPT AT CONNECTIONS TO PRESSURE SENSORS. COORDINATE PIPE SIZE CONNECTIONS FOR PRESSURE SENSORS WITH NPT THREAD SIZE ON SENSORS.

2. PROVIDE A ISOLATION VALVE ON EACH OF FOUR PIPES ENTERING THE FISH WELL ACCESS ROOM, AND A STRAINER DOWNSTREAM FROM THAT ISOLATION VALVE.

3. PROVIDE ISOLATION VALVES AND UP-AND-DOWN BLOW-OFFS AS SHOWN FOR EACH PRESSURE SENSOR CONNECTION (I.E. ON BOTH SIDES FOR DIFFERENTIAL PRESSURE SENSORS).

4. MOUNT ALL PIPE, VALVES AND SENSORS ON NORTH WALL OF FISH WELL ACCESS ROOM AS SHOWN. ALL FITTINGS AND INSTRUMENTS SHALL BE NO HIGHER THAN 6 FEET AFF AS SHOWN.

5. ALL PIPE AND FITTINGS SHALL BE STAINLESS STEEL.

US Army Corps of Engineers
Seattle District

Symbol	Description	Date	Appr.	Symbol	Description
		/ /			

Date: 16 MAR 06
File: E-56-14-19
Rev.

Designed by: EC
Drawn by: EC
Checked by:
Prepared by:

U.S.ARMY ENGINEER DISTRICT,SEATTLE
CORPS OF ENGINEERS
SEATTLE, WASHINGTON

ADDITIONAL WATER STORAGE PROJECT
HOWARD HANSON DAM

PRESSURE SENSOR PIPING ELEVATION

GREEN RIVER WASHINGTON

Plate number: P-308

Sheet of

FILE: I:\AECDESIGNS\HHAW\Plumbing\HHAWP-308INS.DGN

DESIGN FILE:

DATE AND TIME PLOTTED: 07-AUG-2008 11:34

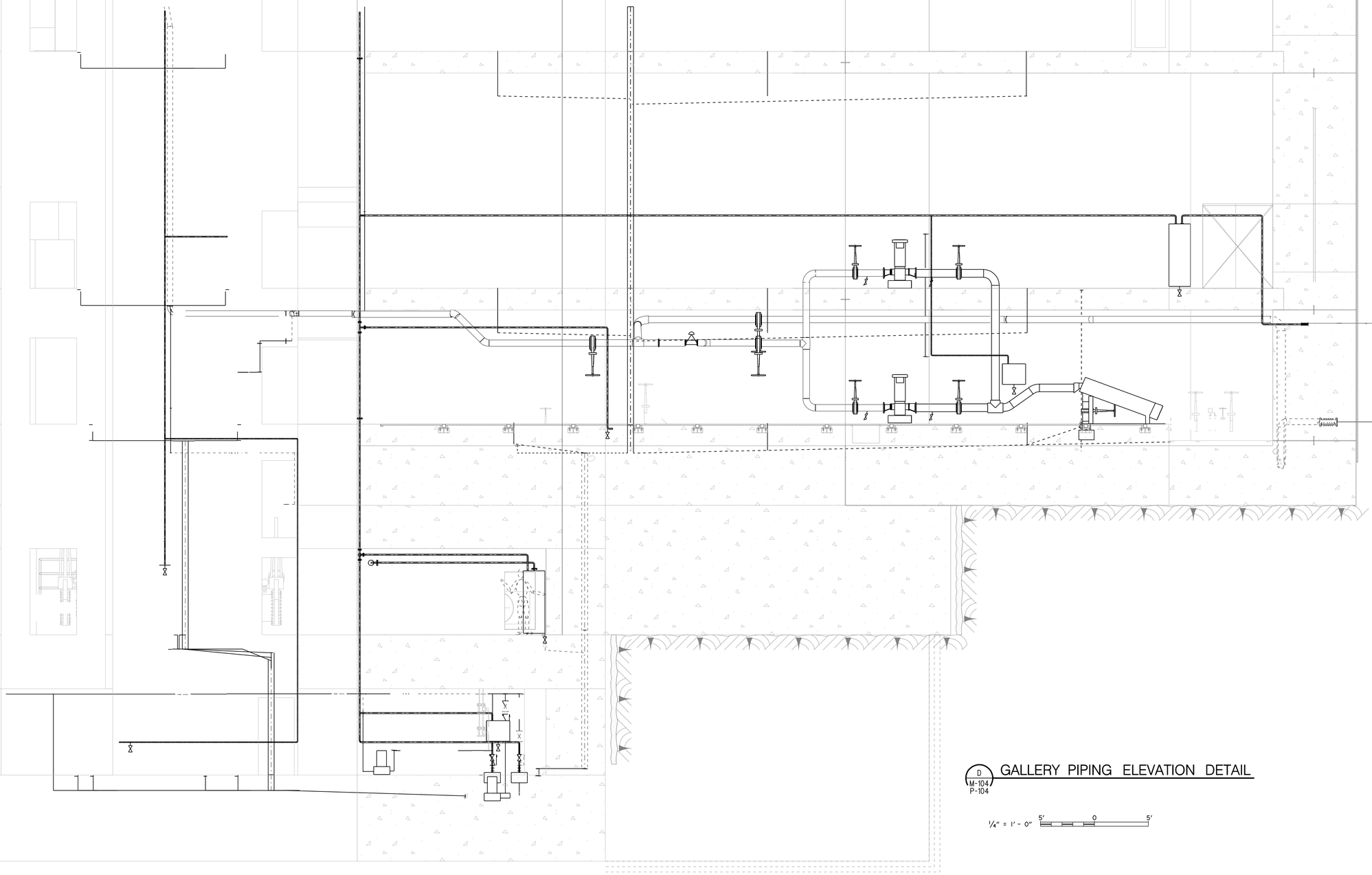

D
M-104
P-104

GALLERY PIPING ELEVATION DETAIL

1/4" = 1' - 0" 5' 0 5'

US Army Corps of Engineers
Seattle District

Symbol	Description	Date	Appr.	Symbol	Description
		/ /			

Designed by: DJB
Drawn by: C
Checked by:
Date: 16 MAR 06
File: E-56-14-19
Rev.

U.S.ARMY ENGINEER DISTRICT, SEATTLE
CORPS OF ENGINEERS
SEATTLE, WASHINGTON
Prepared by:

ADDITIONAL WATER STORAGE PROJECT
HOWARD HANSON DAM
GREEN RIVER WASHINGTON

GALLERY PIPING ELEVATION

Plate number:
P-309
Sheet of

DATE AND TIME PLOTTED: 07-AUG-2008 11:34
DESIGN FILE: J:\AECDESIGNS\HHAWP\Plumbing\HHAWP-309xxx.DGN

MATCHLINE SEE P-312

EL 1140.01'
FLOOR 8

EL 1118.05'
FLOOR 7

EL 1096.09'
FLOOR 6

EL 1074.13'
FLOOR 5

EL 1061.53'
FLOOR 4

EL 1054.00'

EL 1042.00'
FLOOR 2

EL 1029.00'
FLOOR 1

EL 1021.00'
BOTTOM OF EXCAVATION

4" DRAIN PIPE

6" PUMPED RIVER WATER PIPE

3/4" PUMPED RIVER WATER PIPE

FISH WELL DRAIN PIPING- SEE M-305 FOR DETAILS

DRAIN PIPE

X M-304

X M-305

D M-310

STA 4+94.76

STA 4+87.5

STA 4+21.5

STA 3+91.5

PLUMBING CENTERLINE PROFILE I

B M-101 THRU M-113

SCALE: 3/16 " = 1'-0"

3/16" = 1'-0" 5' 0 5' 10'

US Army Corps of Engineers
Seattle District

Symbol	Description	Date	Appr.	Symbol	Description
		/ /			

Designed by: DJB, EC
Drawn by: DJB, EC
Checked by:
Date: 16 MAR 06
File: E-56-14-19
Rev.

U.S.ARMY ENGINEER DISTRICT,SEATTLE
CORPS OF ENGINEERS
SEATTLE, WASHINGTON
Prepared by:

ADDITIONAL WATER STORAGE PROJECT
HOWARD HANSON DAM
GREEN RIVER WASHINGTON

PLUMBING CENTERLINE PROFILE I

Plate number: P-311
Sheet of

DATE AND TIME PLOTTED: 07-AUG-2008 11:34
DESIGN FILE: J:\AECDESIGNS\HHAW\Plumbing\HHAWP-311xxx.DGN

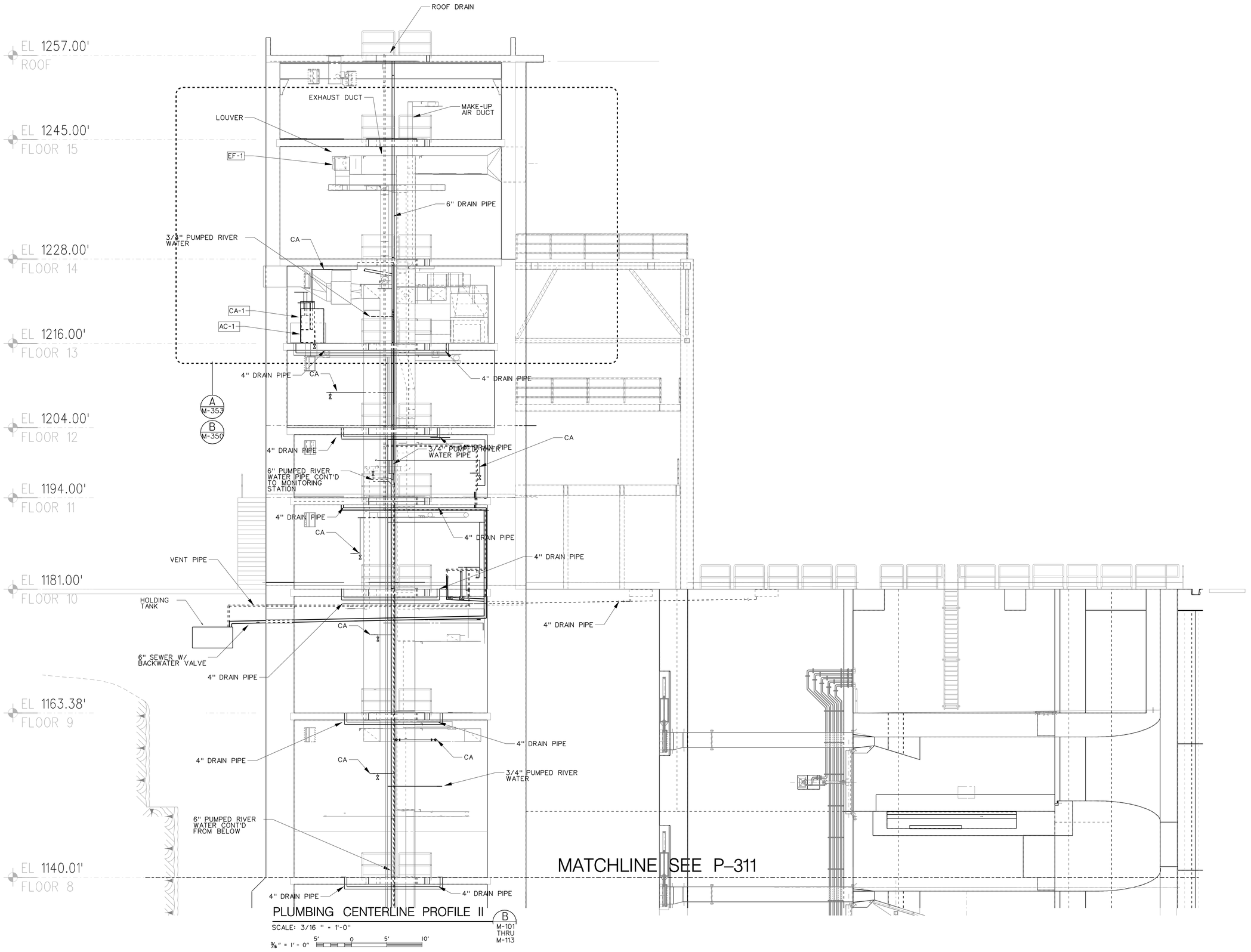

PLUMBING CENTERLINE PROFILE II

SCALE: 3/16 " = 1'-0"

3/8" = 1' - 0" 5' 0 5' 10'

B
M-101
THRU
M-113

US Army Corps of Engineers
Seattle District

Symbol	Description	Date	Appr.	Symbol	Description
		/ /			

Date: 16 MAR 06
File: E-56-14-19
Rev.

Designed by: DJB, EC
Drawn by: DJB, EC
Checked by:

U.S.ARMY ENGINEER DISTRICT,SEATTLE
CORPS OF ENGINEERS
SEATTLE, WASHINGTON
Prepared by:

ADDITIONAL WATER STORAGE PROJECT
HOWARD HANSON DAM
PLUMBING CENTERLINE PROFILE II
GREEN RIVER WASHINGTON

Plate number:
P-312
Sheet of

DESIGN FILE: I:\AECDESIGNS\HHAW\Plumbing\HHAWP-312xxx.DGN
DATE AND TIME PLOTTED: 07-AUG-2008 11:35

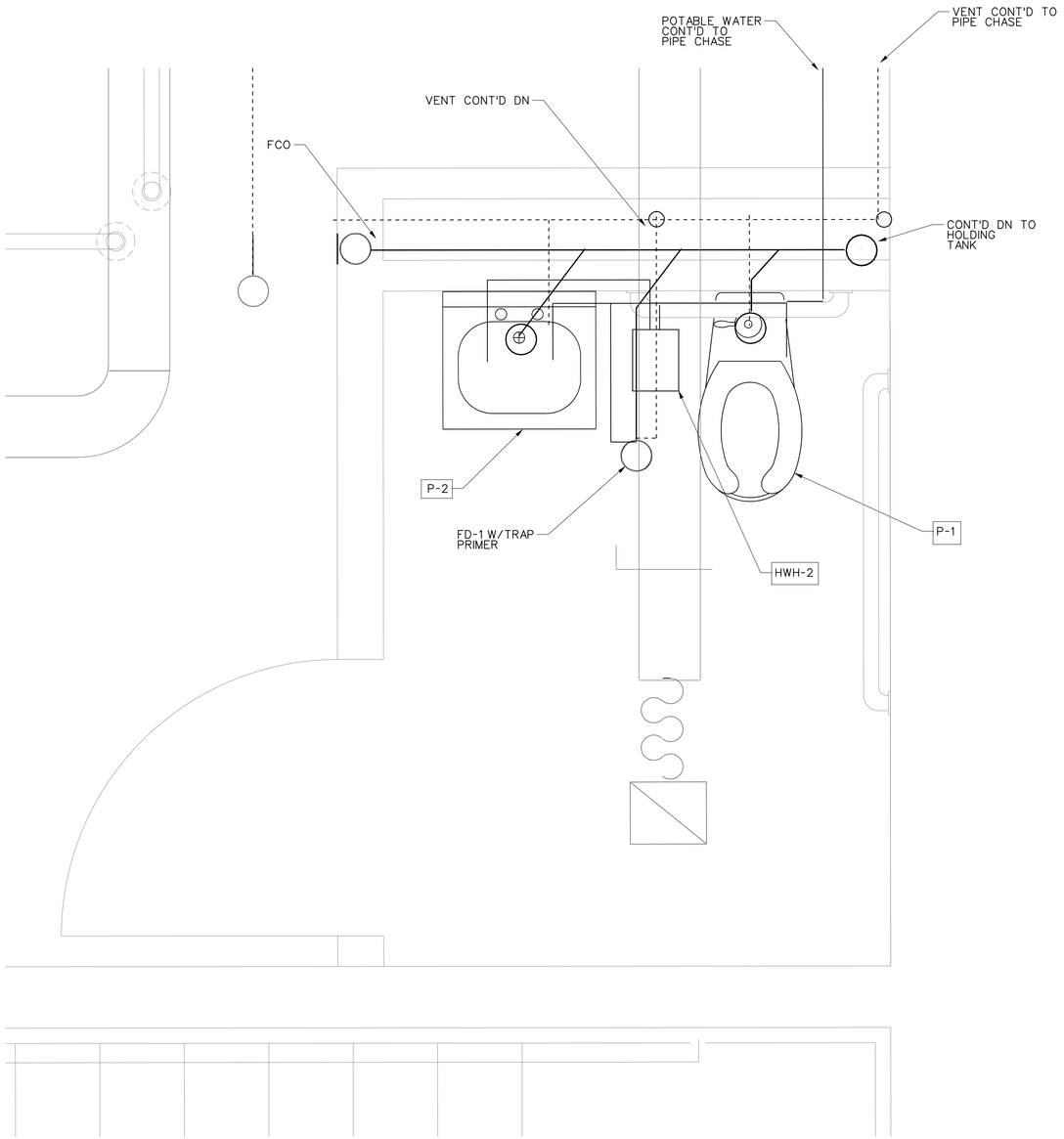

TOILET RM EL 1181

1½" = 1'-0" 12" 9" 6" 3" 0 1'

US Army Corps of Engineers
Seattle District

Symbol	Description	Appr.	Date
			/ /

Designed by: DJB
Drawn by: DJB
Checked by:
Prepared by:
Date: 16 MAR 06
File • E-56-14-19
Rev.

U.S.ARMY ENGINEER DISTRICT,SEATTLE
CORPS OF ENGINEERS
SEATTLE, WASHINGTON

ADDITIONAL WATER STORAGE PROJECT
HOWARD HANSON DAM
GREEN RIVER WASHINGTON

ENLARGED TOILET ROOM PLAN

Plate number:
P-401
Sheet of

DATE AND TIME PLOTTED: 07-AUG-2008 11:35 DESIGN FILE: I:\AECDESIGNS\HHAW\Plumbing\HHAWP-401RG1.DGN

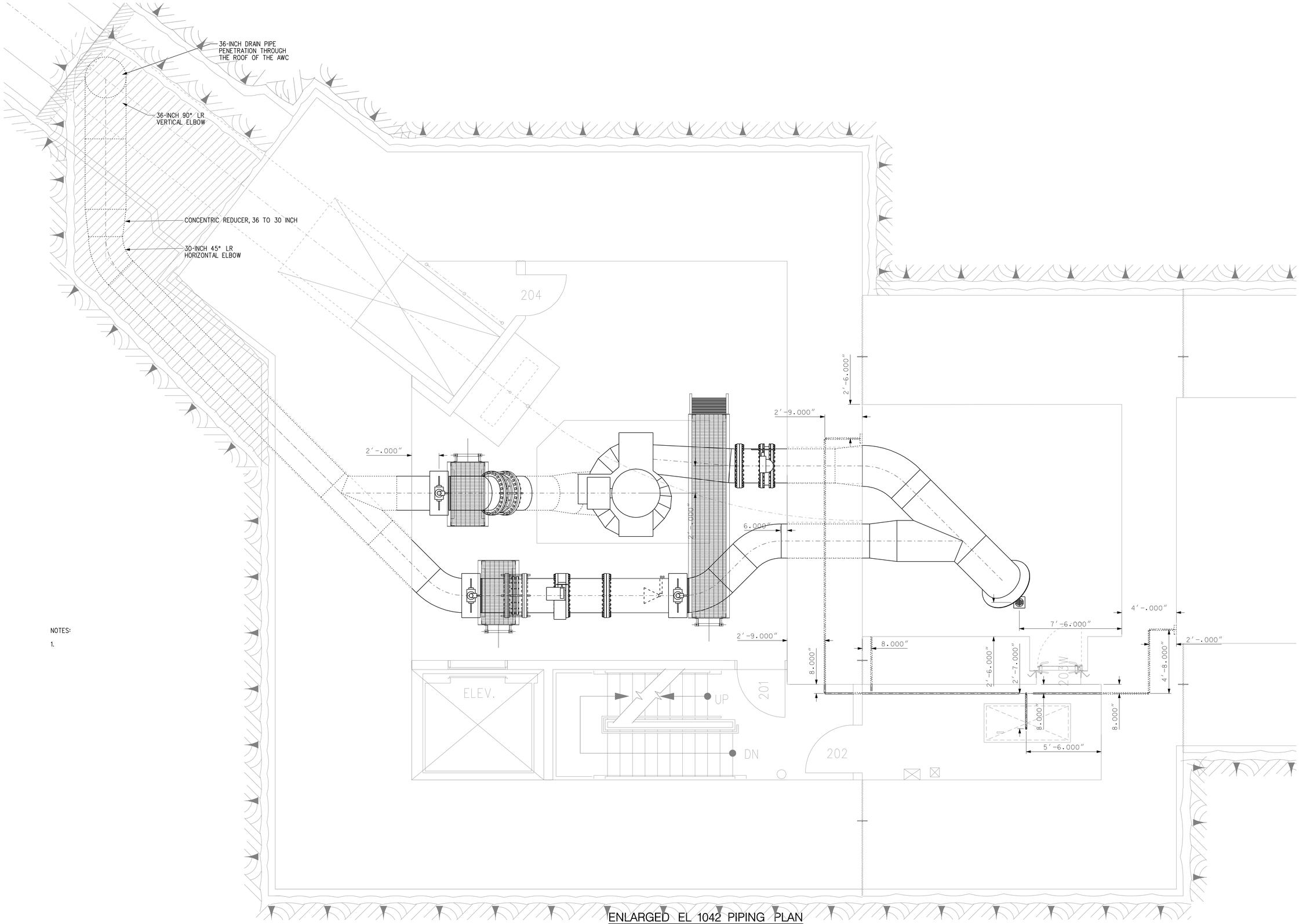

NOTES:

1.

ENLARGED EL 1042 PIPING PLAN

3/8" = 1'-0" 12"6"0 1' 2' 3' 4' 5' 6' 7'

US Army Corps of Engineers
Seattle District

Symbol	Description	Date	Appr.	Symbol	Description
		/ /			

Date: 16 MAR 06
File: E-56-14-19
Rev.

Designed by: EC
Drawn by: EC
Checked by: X

U.S.ARMY ENGINEER DISTRICT,SEATTLE
CORPS OF ENGINEERS
SEATTLE, WASHINGTON
Prepared by:

ADDITIONAL WATER STORAGE PROJECT
HOWARD HANSON DAM
ENLARGED EL 1042
PIPING PLAN
GREEN RIVER WASHINGTON

Plate number:
P-402
Sheet of

DESIGN FILE: I:\AECDESIGNS\HHAW\Plumbing\HHAWP-402FWP.DGN
DATE AND TIME PLOTTED: 07-AUG-2008 11:36

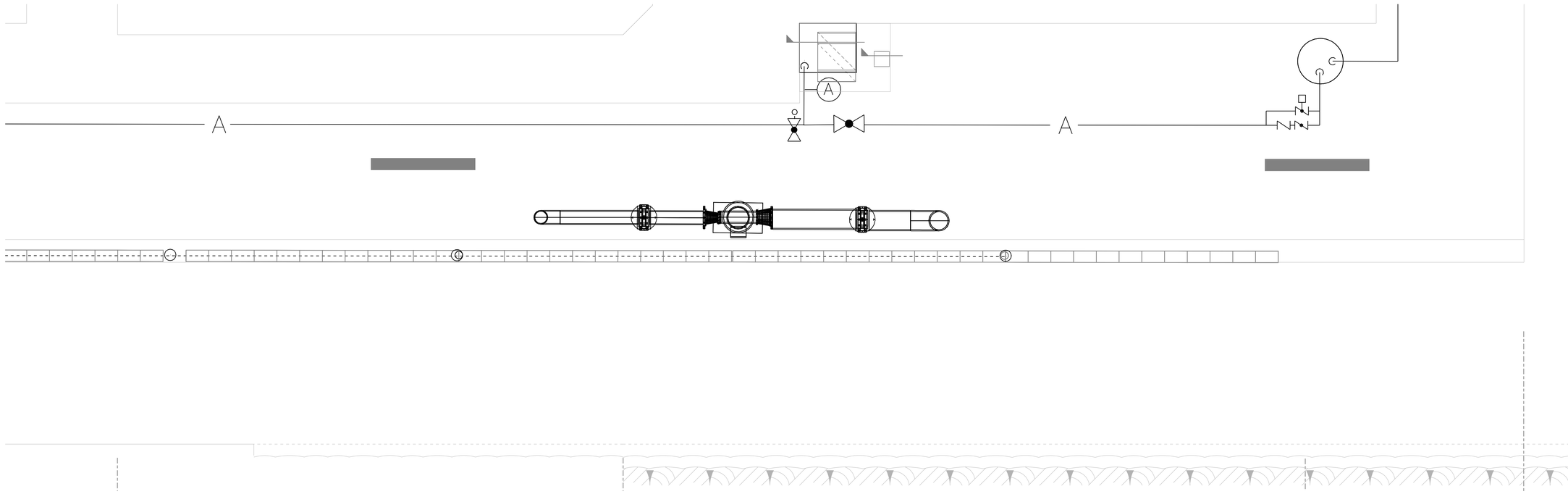

PLUMBING PLAN EL 1074

½" = 1'-0" 12"6" 0 1' 2' 3' 4' 5'

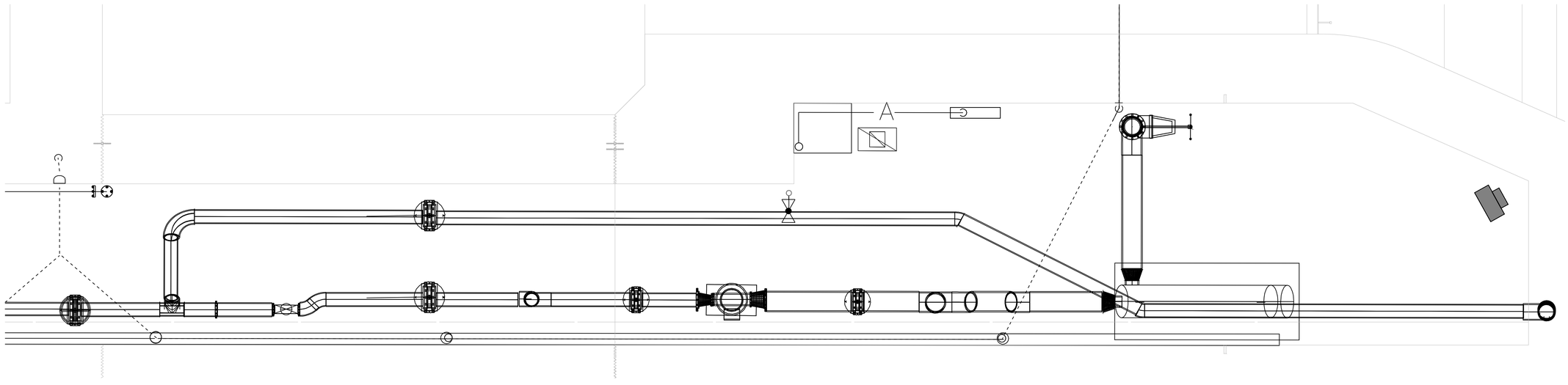

PLUMBING PLAN EL 1061

½" = 1'-0" 12"6" 0 1' 2' 3' 4' 5'

US Army Corps of Engineers
Seattle District

Symbol	Description	Appr.	Date
			/ /

Designed by: DJB
Drawn by: DJB
Checked by:
Date: 16 MAR 06
File: E-56-14-19
Rev.

U.S.ARMY ENGINEER DISTRICT,SEATTLE
CORPS OF ENGINEERS
SEATTLE, WASHINGTON
Prepared by:

ADDITIONAL WATER STORAGE PROJECT
HOWARD HANSON DAM
GREEN RIVER WASHINGTON

ENLARGED EL 1061.5 & EL 1074 PLANS

Plate number:
P-403
Sheet of

DATE AND TIME PLOTTED: 07-AUG-2008 11:36
DESIGN FILE: I:\AECDESIGNS\HHAW\Plumbing\HHAWP-403pp3.DGN

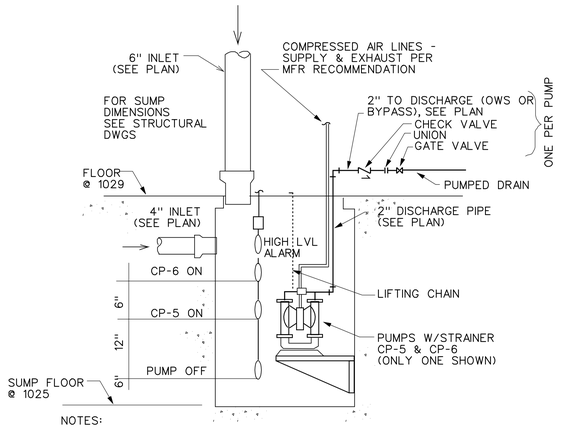

NOTES:

1. SEE PLAN FOR ADDITIONAL EQUIPMENT ITEMS NOT SHOWN HERE
2. PROVIDE PNEUMATIC FLOAT SWITCHES FOR PUMP ACTUATION.
3. FISH WELL DEWATERING PIPING & SP-1 NOT SHOWN.

SUMP PUMP BASIN SECTION

NOT TO SCALE

A / P-101

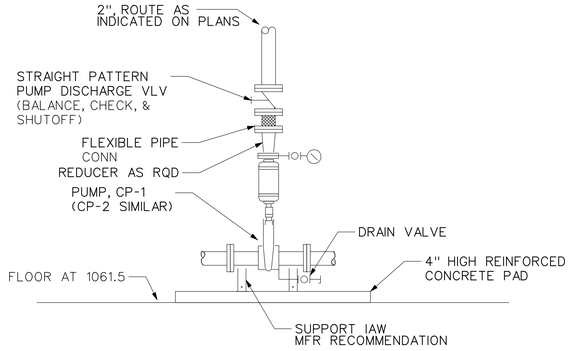

NOTE: PIPING AND VALVES SHALL BE LINE SIZE.

PUMP DETAIL

NOT TO SCALE

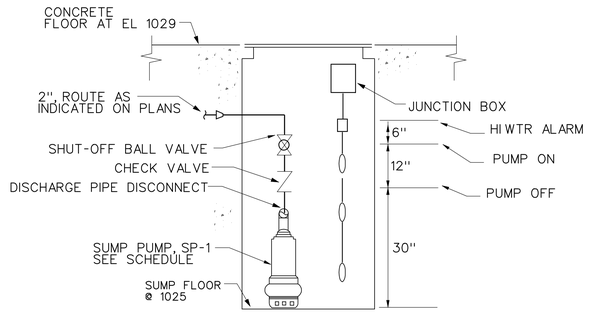

BACK-UP SUMP PUMP DETAIL

NOT TO SCALE

X / X

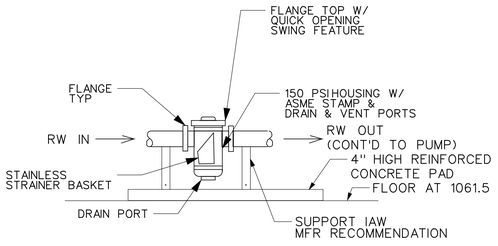

STRAINER DETAIL

NOT TO SCALE

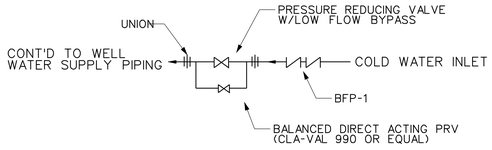

PUMPED WELL WATER SUPPLY

NOT TO SCALE

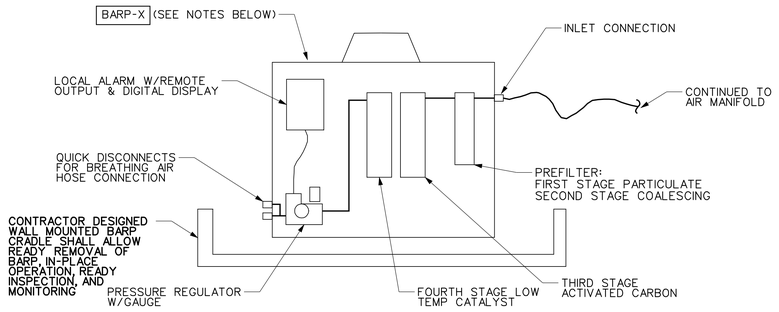

ELEVATION

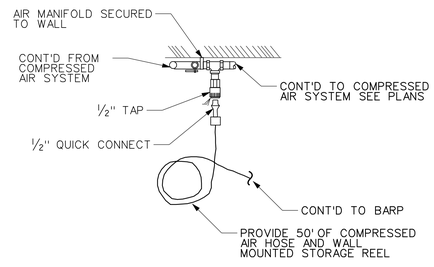

PLAN VIEW

NOTES:

1. PROVIDE THREE LOCATIONS (SEE PLANS AND SCHEDULE) WITH COMPLETE BARP (BREATHING AIR RESPIRATORY PANELS) AS SHOWN
2. PROVIDE ONE PRESSURE DEMAND RESPIRATOR W/BACK-UP AT EACH BARP STATION.

WALL MOUNTED BREATHING AIR STATION

NOT TO SCALE

PLUMBING NOTES:

1. SEISMIC PROTECTION SHALL BE PROVIDED FOR ALL PIPING AS INDICATED OR X AS SPECIFIED.

2. CONTRACTOR SHALL COORDINATE LOCATION OF PIPING AND RELATED COMPONENTS WITH ALL OTHER TRADES. ALL PIPING SHALL BE LOCATED TO PERMIT MAXIMUM ACCESS TO ALL ADJACENT PIPE AND EQUIPMENT. WHERE PRACTICAL PIPING ROUTED THROUGH CONCRETE WALLS SHALL BE LOCATED TO UTILIZE THE RECTANGULAR STRUCTURAL 'SLEEVES' INDICATED ON THE STRUCTURAL AND MECHANICAL DRAWINGS. WHILE EVERY EFFORT HAS BEEN MADE TO ANTICIPATE THE MINIMUM SLEEVE SIZE NEEDED, FINAL SLEEVE SIZE, QUANTITY, AND LOCATION SHALL BE DETERMINED FROM SHOP DRAWINGS TO BE SUBMITTED IN ACCORDANCE WITH THE SPECIFICATIONS PRIOR TO CONSTRUCTION. CONFIRMATION OF SUITABLE PIPE AND SLEEVE ROUTING, AND ADEQUATE CLEARANCE FOR ALL STRUCTURAL SLEEVES SHALL BE CONFIRMED BY THE CONTRACTOR PRIOR TO CONSTRUCTION. ADDITIONAL CONCRETE CORE DRILLING, IF REQUIRED AFTER CONCRETE POUR, SHALL BE DONE AT THE CONTRACTOR'S EXPENSE.

3. ALL DRAINAGE AND PRESSURE PIPING SHALL BE PITCHED FOR DRAINAGE; PROVIDE AND INSTALL DRAINAGE FIXTURES AND PIPING IAW PLUMBING CODE; MINIMUM SLOPE SHALL BE ⅛" PER FOOT OR AS SPECIFIED.

US Army Corps of Engineers
Seattle District

Symbol	Description	Date	Appr.	Symbol	Description
		/ /			

Designed by: DJB
Drawn by: DJB
Checked by:
Prepared by:
Date: 16 MAR 06
File: E-56-14-19
Rev.

U.S. ARMY ENGINEER DISTRICT, SEATTLE
CORPS OF ENGINEERS
SEATTLE, WASHINGTON

ADDITIONAL WATER STORAGE PROJECT
HOWARD HANSON DAM
GREEN RIVER WASHINGTON

PLUMBING DETAILS I

Plate number: P-501
Sheet of

DESIGN FILE: I:\AE\DESIGNS\HHAW\Plumbing\HHAWP-501pd1.DGN
DATE AND TIME PLOTTED: 07-AUG-2008 11:37

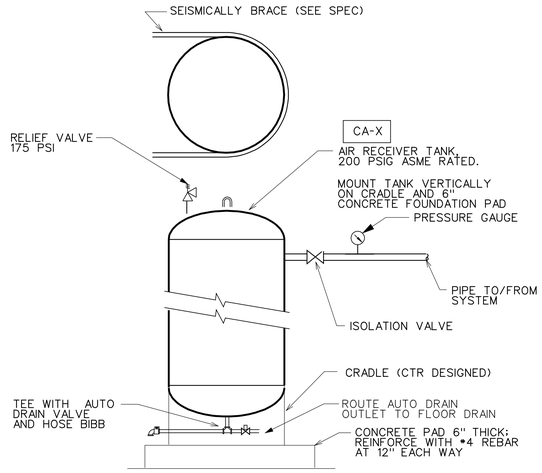

NOTE: ANCHOR EQUIPMENT TO BE IN ACCORDANCE WITH SEISMIC SPEC

AIR RECEIVER INSTALLATION DETAIL

NOT TO SCALE

B P-102 P-105 P-112

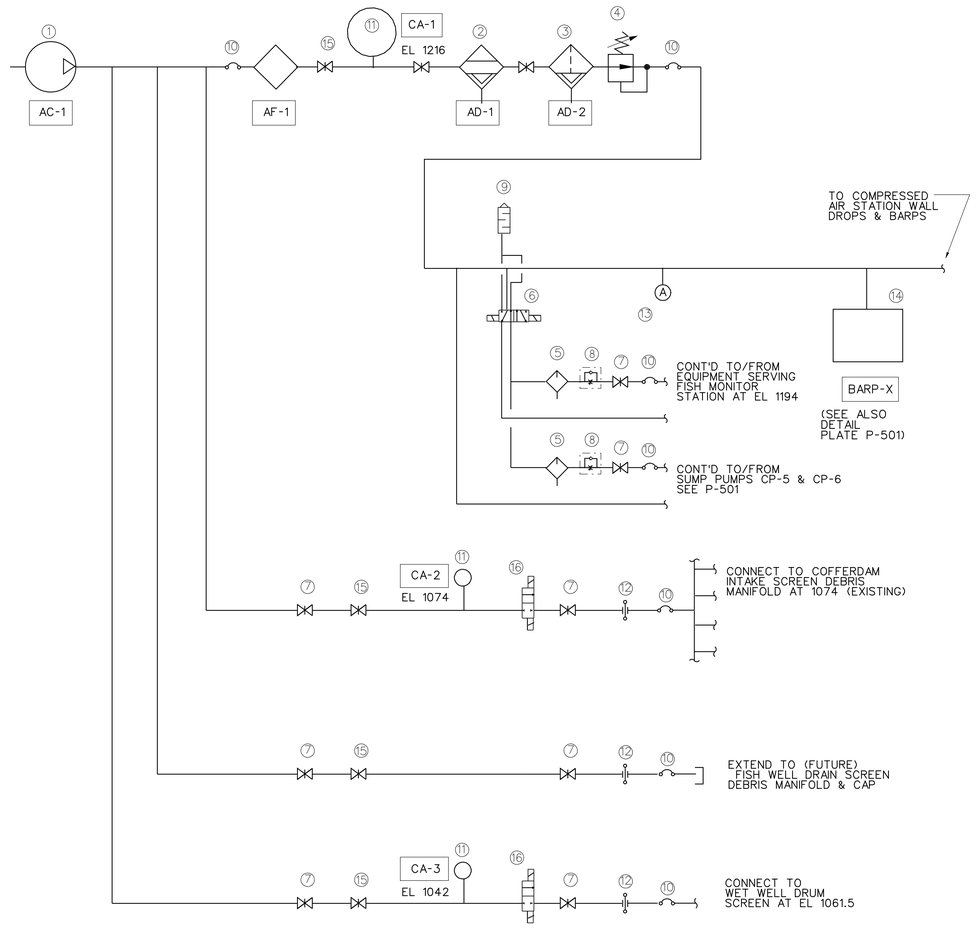

(1) AIR COMPRESSOR, TWO STAGE, RATED FOR 175 PSI, 27 SCFM (INLET) MINIMUM. PROVIDE WITH ADJUSTABLE PRESSURE SWITCH, ODP MOTOR STARTER, AIR COOLED AFTERCOOLER (35 SCFM MINIMUM SIZED FOR 200F INLET TEMPERATURE), AND AUTOMATIC DRAIN. SET PRESSURE SWITCH TO 175 PSI. SET ON VIBRATION ISOLATORS AS SPECIFIED. SEE SCHEDULE.

(2) DIRECT EXPANSION REFRIGERATED AIR DRYER RATED FOR 40 SCFM INPUT AT 175 PSI AND 180°F. AUTOMATIC DRAIN. SEE SCHEDULE.

(3) FILTER/DESSICANT DRYER RATED FOR 30 SCFM @ 175 PSI, PROVIDED WITH MINI AUTO DRAIN. HEATLESS, ADSORPTION REGENERATIVE TYPE. PROVIDE DRAIN PIPING EXTENDING TO FUNNEL WITH 2" GAP, LEADING TO FLOOR DRAIN.

(4) PRESSURE REGULATING VALVE, PROVIDE WITH DOWNSTREAM PRESSURE GAUGE, INITIANLLY SET PRESSURE AT 150 PSI.

(5) LUBRICATOR, ROUTE MANUAL DRAIN PIPING TO FUNNEL WITH 2" GAP, EXTEND DRAIN PIPING TO FLOOR DRAIN.

(6) PNEUMATIC CONTROL VALVE, 3/8" 5 PORT, 2 WAY DOUBLE SOLENOID, WITH MIN Cv = 0.70 PROVIDE HOSE CONNECTIONS WITH SWIVEL CONNECTIONS BOTH ENDS. PROVIDE ADAPTORS AND FITTINGS AS REQUIRED, RATED FOR 200 PSI, SSL, BRASS, OR BRONZE.

(7) ISOLATION VALVE

(8) VALVE, 3/8 ", EXHAUST FLOW CONTROL WITH BYPASS CHECK VALVE. PROVIDE REDUCING FITTINGS AS REQUIRED TO MOUNT TO ACTUATOR.

(9) AIR SYSTEM EXHAUST MUFFLER

(10) FLEXIBLE CONNECTION

(11) VERTICAL ASME 200 PSI APPROVED TANK, SEE SCHEDULE

(12) WATERSTOP AT CONCRETE WALL

(13) COMPRESSED AIR CONNECTION STATION, QUANTITY & LOCATION IAW PLANS; SEE DETAIL THIS SHEET

(14) BARP - BREATHING AIR RESPIRATORY PROTECTOR SEE SCHEDULE

(15) CHECK VALVE

(16) VALVE, 3/8" 2 PORT, 2 WAY DOUBLE SOLENOID, WITH MIN Cv = 0.70 PROVIDE HOSE CONNECTIONS WITH SWIVEL CONNECTIONS BOTH ENDS. PROVIDE ADAPTORS AND FITTINGS AS REQUIRED, RATED FOR 200 PSI, SSL, BRASS, OR BRONZE.

SLOPE COMPRESSED AIR SYSTEM PIPING FOR DRAINAGE; SEE SPEC & SYSTEM ISOMETRIC. FOR MECHANICAL ROOM LAYOUT SEE M-404. FOR SCHEDULES SEE P-601.

COMPRESSED AIR SYSTEM SCHEMATIC

NOT TO SCALE

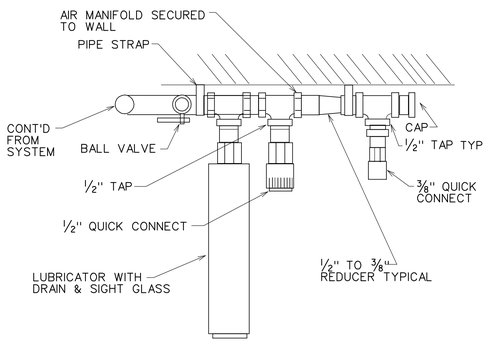

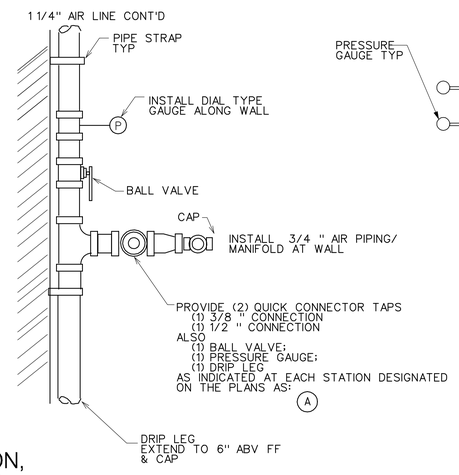

COMPRESSED AIR STATION, WALL DROP ELEVATION

NOT TO SCALE

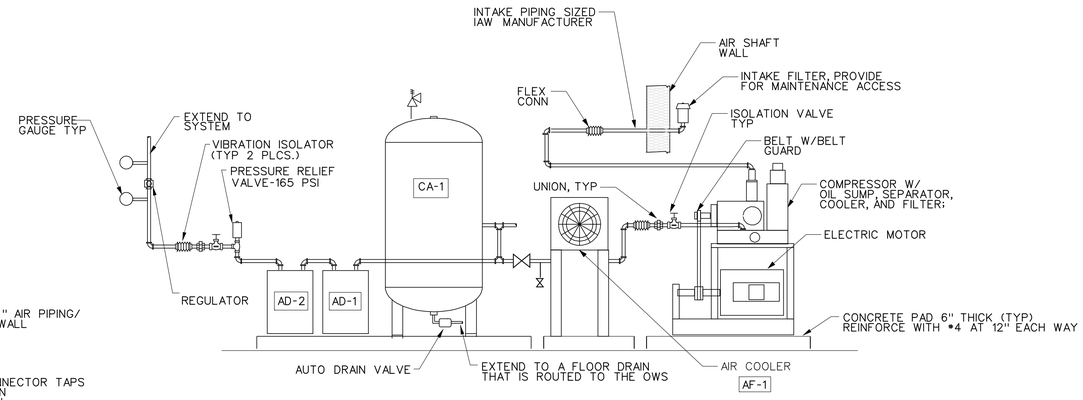

NOTES:

1. PROVIDE AIR-COOLED AFTERCOOLER CAPABLE OF LOWERING COMPRESSED AIR TEMPERATURE TO WITHIN 20° OF SURROUNDING AIR TEMPERATURE.
2. PROVIDE FOR CONDENSATE SEPARATION AND REMOVAL; ROUTE CONDENSATE TO FLOOR DRAIN LEADING TO OWS; DO NOT ROUTE CONDENSATE TO SEWER.
3. CONFIGURATION MAY VARY FROM THAT SHOWN.
4. PROVIDE MFR'S STD ENCLOSURE FOR NOISE SUPPRESSION.
5. ANCHOR EQUIPMENT SHALL BE IAW SEISMIC SPEC.

AIR COMPRESSOR DETAIL

NOT TO SCALE

A P-112

US Army Corps of Engineers
Seattle District

Symbol	Description	Date
		/ /

Appr.

Designed by: DJB
Drawn by: DJB
Checked by:
Prepared by:
Date: 16 MAR 06
File # E-56-14-19
Rev.

U.S.ARMY ENGINEER DISTRICT, SEATTLE
CORPS OF ENGINEERS
SEATTLE, WASHINGTON

ADDITIONAL WATER STORAGE PROJECT
HOWARD HANSON DAM
GREEN RIVER WASHINGTON

PLUMBING DETAILS II

Plate number:
P-502
Sheet of

DATE AND TIME PLOTTED: 07-AUG-2008 11:37
DESIGN FILE: I:\AECDESIGNS\HHAWP\Plumbing\HHAWP-502pd2.DGN

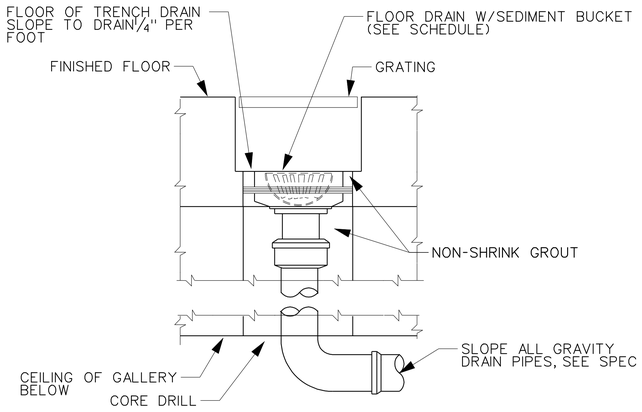

NOTE: FLOOR DRAIN SHOWN INSTALLED AT BOTTOM OF TRENCH; FLOOR DRAINS INSTALLED FLUSH WITH FINISHED FLOOR ARE SIMILAR.

FLOOR DRAIN DETAIL

NOT TO SCALE

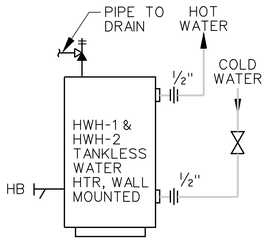

WATER HEATER DETAIL

NOT TO SCALE

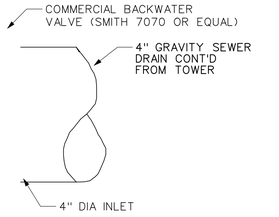

BACKWATER VALVE DETAIL

NOT TO SCALE

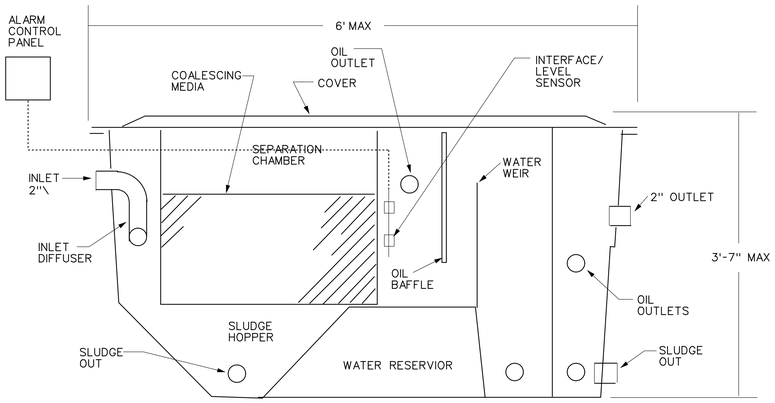

NOTES:

1. CONSTRUCTION SHALL BE FRP OR PLASTC
2. PROVIDE STANDARD MFR'S OIL PUMP-OUT PIPE;
3. ANCHOR TO 6" CONCRETE HOUSEKEEPING PAD

OIL WATER SEPARATOR SECTION

A P-101

NOT TO SCALE

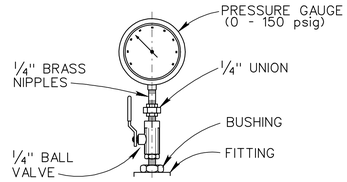

C.A. PRESSURE GAUGE DETAIL

NOT TO SCALE

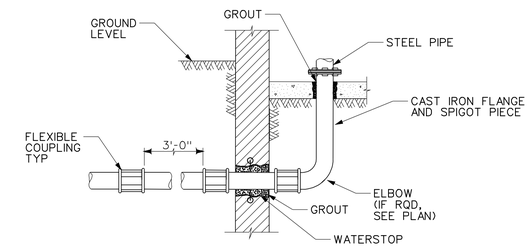

SEISMIC DETAILS FOR PIPING ENTERING BUILDING

NOT TO SCALE

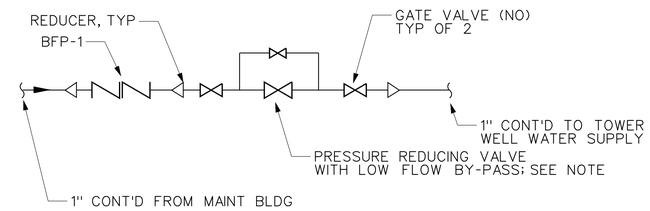

NOTE: HYDRAULICALLY OPERATED PRV SHALL SENSE PRESSURE AT MAIN VALVE OUTLET; PILOT CONTROL SHALL MODULATE TO MAINTAIN MAIN VALVE OUTLET PRESSURE. LOW FLOW BYPASS SHALL BE ACHIEVED THROUGH A BALANCED DIRECT ACTING PRV (CLAVAL 990 OR EQUAL) PROVIDE STRAINER, ISOLATION VALVE, AND CHECK.

WELL WATER PRV VALVE DETAIL

NOT TO SCALE

US Army Corps of Engineers
Seattle District

Symbol	Description	Appr.	Date
			/ /

Designed by: DJB
Drawn by: DJB
Checked by:
Prepared by:
Date: 16 MAR 06
File • E-56-14-19
Rev.

U.S.ARMY ENGINEER DISTRICT, SEATTLE
CORPS OF ENGINEERS
SEATTLE, WASHINGTON

ADDITIONAL WATER STORAGE PROJECT
HOWARD HANSON DAM
GREEN RIVER WASHINGTON

PLUMBING DETAILS III

Plate number:
P-503
Sheet of

DATE AND TIME PLOTTED: 07-AUG-2008 11:37
DESIGN FILE: J:\AECDESIGNS\HHAW\Plumbing\HHAWP-503pd3.DGN

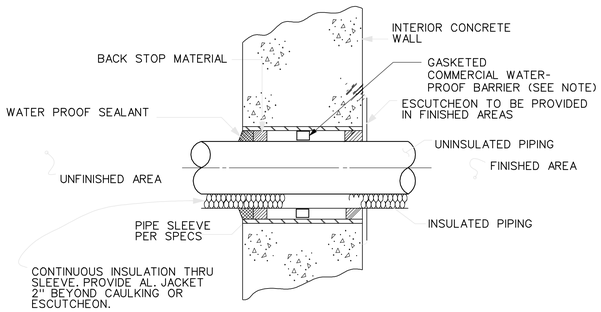

NOTE: WATERSTOPS SHALL BE PROVIDED ON ALL PENETRATIONS SUBJECT TO HYDROSTATIC PRESSURE ABOVE 15 PSI(35 FEET HEAD). THIS INCLUDES ALL PENETRATIONS THAT ARE SUBJECT TO TEMPORARY HEAD PRESSURE DURING A FLOOD EVENT OF EL1215 OR HIGHER.

EXTERIOR CONCRETE WALL PIPE PENETRATION DETAIL (A / P-109)

NOT TO SCALE

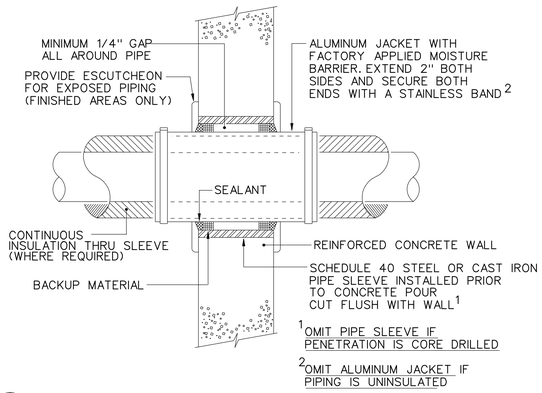

1 OMIT PIPE SLEEVE IF PENETRATION IS CORE DRILLED

2 OMIT ALUMINUM JACKET IF PIPING IS UNINSULATED

INTERIOR CONCRETE WALL PIPE PENETRATION DETAIL

NOT TO SCALE

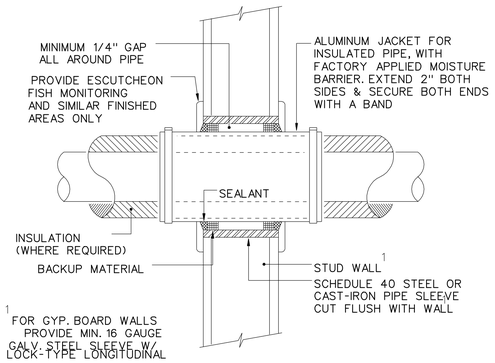

1 FOR GYP. BOARD WALLS PROVIDE MIN. 16 GAUGE GALV. STEEL SLEEVE W/ LOCK-TYPE LONGITUDINAL SEAM

STUD WALL PIPE PENETRATION DETAIL (B / P-110)

NOT TO SCALE

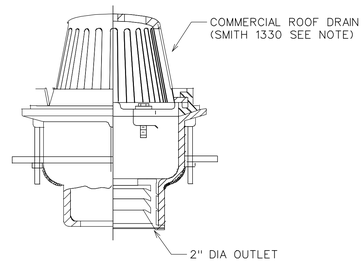

NOTE: COORDINATE MECHANICAL AND ARCHITECTURAL RQMTS, SEE ARCHITECTURAL ROOF DRAIN CONFIGURATION

EXTERIOR ROOF DRAIN DETAIL (C / P-113)

NOT TO SCALE

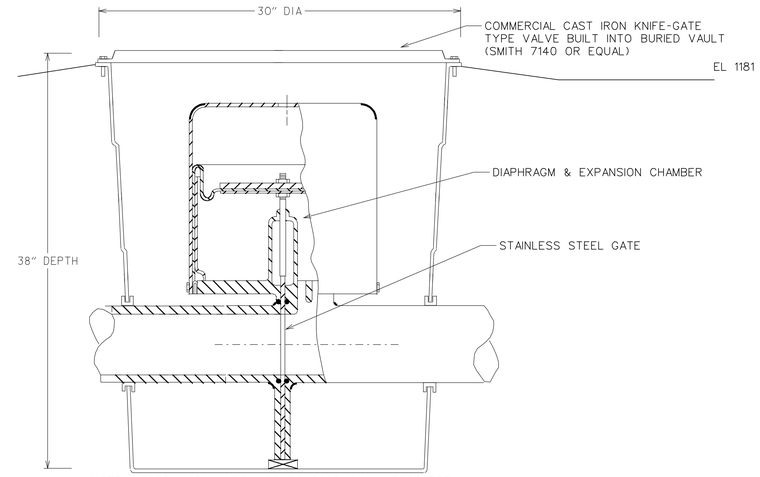

NOTE: AFTER INSTALLATION CONTRACTOR SHALL TEST FOR PROPER VALVE FUNCTION USING INFLATABLE TEST BALL PER MANUFACTURER INSTRUCTIONS.

FLOOR PIPE PENETRATION DETAIL

NOT TO SCALE

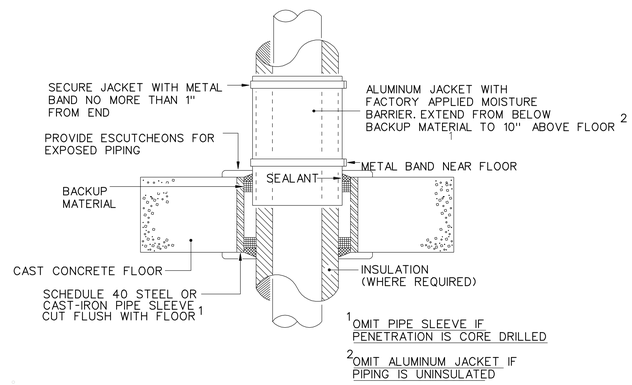

1 OMIT PIPE SLEEVE IF PENETRATION IS CORE DRILLED

2 OMIT ALUMINUM JACKET IF PIPING IS UNINSULATED

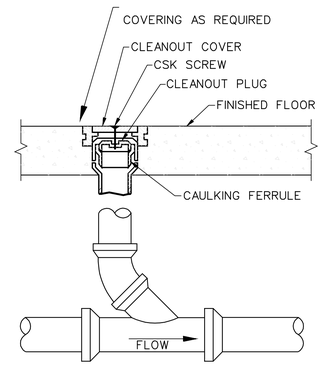

FLOOR CLEANOUT DETAIL

NOT TO SCALE

FLOOD VALVE DETAIL (D / P-109)

NOT TO SCALE

US Army Corps of Engineers
Seattle District

Symbol	Description	Date	Appr.	Symbol	Description
		/ /			

Date: 16 MAR 06
File * E-56-14-19
Rev.

Designed by: DJB
Drawn by: DJB
Checked by:

U.S.ARMY ENGINEER DISTRICT,SEATTLE
CORPS OF ENGINEERS
SEATTLE, WASHINGTON
Prepared by:

ADDITIONAL WATER STORAGE PROJECT
HOWARD HANSON DAM
GREEN RIVER WASHINGTON

PLUMBING DETAILS IV

Plate number:
P-504
Sheet of

DATE AND TIME PLOTTED: 07-AUG-2008 11:38
DESIGN FILE: F:\ACCDESIGNS\HHAW\Plumbing\HHAWP-504p04.DGN

AIR COMPRESSOR SCHEDULE

MARK NO.	CAPACITY	SERVES	WORKING PRESSURE (PSI)	RECEIVER CAPACITY (GAL)	NO. OF STAGES	MOTOR DATA				REMARKS
						BHP	VOLTS	PHASE	HZ	
AC-1	(27 INLET CFM @ 175 PSIG)	FISH SCREEN CLEANING, SHOP TOOLS, BREATHING AIR	175	SEE SCHEDULE	2	10	460	3	60	LUBRICATED ROTARY SCREW; PROVIDE WITH AIR COOLER; SEE DETAIL SHEET P-502

AIR COOLED AFTERCOOLER SCHEDULE

MARK NO.	LOCATION	ACFM	WORKING PRESSURE (PSI)	FAN SIZE (INCH)		MOTOR DATA				REMARKS
						BHP	VOLTS	PHASE	HZ	
AF-1	EL 1216	27	175	12		1/4	115	1	60	W/12mm AUTO DRAIN, 30mm AIR CONN, AND TEMP & PRES GAUGES FOR INLET & OUTLET

COMPRESSED AIR RECEIVER SCHEDULE

MARK NO.	QUANTITY	LOCATION	SERVES	CAPACITY EACH (GAL)	APPROX DIMS	TYPE	REMARKS
CA-1	1	MECH 1216	AC-1	100	24" Ø x 5' HIGH	ASME PRESSURE VESSEL	PROVIDE PRESSURE TRANSMITTER & GAUGE; ROUTE TO READOUT ON REMOTE CONSOLE
CA-2	1	GALLERY 1074	COFF SCREAN CLEANING	150	24" Ø x 5' HIGH	ASME PRESSURE VESSEL	PROVIDE PRESSURE TRANSMITTER & GAUGE; ROUTE TO READOUT ON REMOTE CONSOLE
CA-3	1	EL 1042	WW DRUM SCREEN*	150	24" Ø x 5' HIGH	ASME PRESSURE VESSEL	PROVIDE PRESSURE TRANSMITTER & GAUGE; ROUTE TO READOUT ON REMOTE CONSOLE

* NOTE: PROVIDE CONNECTION FOR FW SCREEN CLEANING DEBRIS MANIFOLD (FUTURE)

REFRIGERANT AIR DRYER SCHEDULE

MARK NO.	LOCATION	ACFM	WORKING PRESSURE (PSI)			MOTOR DATA				REMARKS
						BHP	VOLTS	PHASE	HZ	
AD-1	EL 1216	40	175			1/2	115	1		W/12mm DRAIN, 30mm AIR CONN, AND TEMP & PRES GAUGES FOR INLET & OUTLET AND MANUAL BYPASS (INGERSOLL RAND DXR 75)

FILTER/DESSICANT AIR DRYER SCHEDULE

MARK NO.	LOCATION	ACFM	WORKING PRESSURE (PSI)				REMARKS*
AD-2	EL 1216	25	175				PROVIDE MANUAL BYPASS, AUTO DRAIN & INLET AND OUTLET FILTERS PER MFR RECOMMENDATION

* NOTE: PROVIDE REGULATOR, LUBRICATOR, AND ASSOCIATED ITEMS AS REQUIRED; SEE P-502.

BACKFLOW PREVENTER SCHEDULE

MARK NO.	SERVICE	TYPE	SIZE	MAX PRESSURE DROP (kPa)	REMARKS
BFP-1	IRRIGATION	DOUBLE CHECK	2"	76	

WATER HEATER SCHEDULE

MARK NO.	LOCATION	STOR CAP (MIN, GAL)	RECOVERY RATE (GPM)	TEMP RISE (°F)	INPUT RATING (KW)	TYPE	ELECTRICAL DATA				REMARKS
							W	VOLTS	PHASE	HZ	
HWH-1	EL 1194	--	0.6	34	14A	ELEC, INSTANTANEOUS	3.0kW	208	3	60	EEMAX SINGLE POINT SP3208 OR EQUAL
HWH-2	EL 1181	--	0.6	34	14A	ELEC, INSTANTANEOUS	3.0kW	208	3	60	EEMAX SINGLE POINT SP3208 OR EQUAL

BREATHING AIR RESPIRATORY PROTECTOR (BARP) SCHEDULE

MARK NO.	QTY	CAPACITY FREE AIR DISCHARGE	MAX INLET PRESSURE (PSI)	FIRST STAGE PREFILTER 1	SECOND STAGE PREFILTER 2	THIRD STAGE FILTER	FOURTH STAGE FILTER	INLET CONN	PANEL MOUNT (INCH)	ELECTRICAL DATA				REMARKS
										AMP	VOLTS	PHASE	HZ	
BARP-1	1	50 CFM	150	0.3 MICRON PARTICULATE	0.75 MICRON LIQUID	ACTIVATED CARBON	CATALYST (CO REMOVAL)	1/2" DIA	24x24	15A	120	1	60	PORTABLE BREATHING AIR RESPIRATORY PROTECTOR PANELS SHALL DELIVER GRADE D BREATHING AIR FOR SCBA. PROVIDE WITH PRESSURE REGULATOR, CO MONITOR, & AUDIBLE ALARM SEE DETAIL, PLATE P-501
BARP-2	"	"	"	" "	" "	"	" "	"	"	"	"	"	"	
BARP-3	"	"	"	" "	" "	"	" "	"	"	"	"	"	"	

WATER PUMP SCHEDULE

MARK	TYPE	SYSTEM	SERVICE	MONITORING STATION FLOW		SECOND OPERATING POINT		MIN. % EFF.	MOTOR			MODEL No. OR EQUAL	REMARKS
				GPM	TOTAL HEAD PRESSURE (FEET)	GPM	TOTAL HEAD PRESSURE (FEET)		BHP	VOLTS/ PHASE/ HERTZ	RPM		
CP-1	VERTICAL INLINE	MONITORING STATION FLOW	PRIMARY SERVICE	300	159	500	99	75	18.4	460/3/60	1780		SINGLE SPEED
CP-2	VERTICAL INLINE	MONITORING STATION FLOW	STANDBY SERVICE	300	159	500	99	75	18.4	460/3/60	1780		SINGLE SPEED
CP-3	NOT USED												
CP-4	NOT USED												
CP-5	AIR OPERATED DOUBLE DIAPHRAGM	GALLERY SUMP TO OWS	PRIMARY SERVICE	20	161	24	130	(AIR OPERATED)				WARREN RUPP SA1-A	SEE NOTES (3) (4) AND DETAIL ON PLATE P-501
CP-6	AIR OPERATED DOUBLE DIAPHRAGM	OWS BYPASS	SECONDARY SERVICE	40	48	32	92	(AIR OPERATED)				WARREN RUPP SA1-A	SEE NOTES (3) (4) AND DETAIL ON PLATE P-501
CP-7	VERTICAL INLINE	OWS WATER DRAIN	PRIMARY SERVICE	25	30	60	25	85	1	460/3/60	1780		
SP-1	VERTICAL	EMERGENCY DEWATERING	PRIMARY SERVICE	200	40			75	4	460/3/60	1750	GOULD HSU	3" INLET/3" OUTLET WITH RECESSED IMPELLER

NOTES:
(1) PUMPS SHALL BE NON-OVERLOADING AT 115% DESIGN FLOW.
(2) PROVIDE SUCTION DIFFUSERS WITH STRAINERS WHERE INDICATED.
(3) 1" SUCTION & DISCHARGE, 10 SCFM AIR MIN; 1/2 " AIR INLET CONN 3/4 " AIR OUT CONN. PUMP SHALL BE CONTROLLED BY PNEUMATIC FLOAT SWITCH
(4) CP-5 & CP-6 SHALL BE CONTROLLED BY PNEUMATIC FLOAT SWITCHES.
(5) CP-5 & CP-6 SHALL BE DISABLED UPON SIGNAL FROM THE FIRE ALARM CONTROL PANEL THROUGH A NORMALLY CLOSED ELECTRONICALLY OPERATED PNEUMATIC VALVE

BASKET STRAINER SCHEDULE

QTY	LOCATION	INLET/OUTLET	DIMENSION	SCREEN MATERIAL	TYPE	REMARKS
2	ELEV 1061.5	8"/8"	22" FLANGE TO FLANGE	316 SSL	IN-LINE	SWING TYPE CLOSURE DESIGN; PROVIDE WITH 1/4" VENT & DRAIN PORTS & SUPPORT LEGS NOWATA K-SERIES OR EQUAL

OIL WATER SEPARATOR SCHEDULE

MARK NO.	LOCATION	FLOWRATE (GPM)	TANK CAP (GAL)	OIL CAP (GAL)	SIZE	TYPE	REMARKS
OWS-1	ELEV 1029	25	125	40	6'x 2'-5" x 3'-7" HIGH	COALESCING	PAN AMERICA ENVIRONMENTAL OS8

US Army Corps of Engineers
Seattle District

Symbol	Description	Date	Appr.	Symbol	Description
		/ /			

Designed by: DJB
Drawn by: DJB
Checked by:
Date: 16 MAR 06
File: E-56-14-19
Rev.

U.S.ARMY ENGINEER DISTRICT, SEATTLE
CORPS OF ENGINEERS
SEATTLE, WASHINGTON
Prepared by:

ADDITIONAL WATER STORAGE PROJECT
HOWARD HANSON DAM
WASHINGTON
PLUMBING SCHEDULES I
GREEN RIVER

Plate number:
P-601
Sheet of

I:\AECDESIGNS\HHAWP\Plumbing\HHAWP-601e03.DGN
DESIGN FILE:
DATE AND TIME PLOTTED: 07-AUG-2008 11:38

SEE CIVIL DESIGN

WASTERWATER HOLDING TANK SCHEDULE

MARK NO.	LOCATION	SERVES	CAPACITY (GAL)	SIZE	TYPE	REMARKS
T-1	ELEV 1181	P-1 & MISC GREY WATER FIXTURES	550 MIN	4' ø APPROX	PREMANUFACTURED FRP ASSY MODIFIED AS INDICATED	

PIPE SCHEDULE (EM1110-2-4205)

SERVICE	CATEGORY	PIPE CONFIGURATION (PARTIAL LIST, SEE SPEC)	MATERIAL (SEE SPEC)	COMMERCIAL SPEC	SIZE	TEST PRESSURE	SPEC SECTION	TEST MEDIUM (SEE SPEC)	REMARKS
FISH WELL DRAIN & WW REFILL	UNWATERING & FILLING	FLANGED & WELDED	STEEL	ASTM A 53	8" - 10"	X	15200	WATER	
PRESSURIZED RIVER WATER DISTRIBUTION	POTABLE & RAW WATER PIPING	FLANGED, THREADED, WELDED	STEEL	ASTM A 53	1/2" - 6"	150 PSIG	15200	WATER	
DOMESTIC (WELL) WATER DISTRIBUTION	POTABLE & RAW WATER PIPING	THREADED	STEEL, COPPER	ASTM A 53, B 88	1/2" - 2"	150 PSIG	15400	WATER	
STATION DRAINAGE: GRAVITY DRAINS	DRAIN, WASTE, & VENT PIPING	CAST IRON, HUB, HUBLESS, THREADED	CAST IRON, BRONZE	ASTM A 74	1 1/2" - 6"	10' HEAD AT FLOOR SURFACE	15400	WATER	
HYDRAULIC FLUID DISTRIBUTION	HYDRAULIC	WELDED	SSL (SCH 80)	ASTM A 312	1/2" - 1"	X	15010	HYDRAULIC FLUID	
COMPRESSED AIR (DEBRIS AIR)	SERVICE AIR PIPING	WELDED, SOLDERED	STEEL, COPPER	ASTM A 53, B 88	1/2" - 2"	200 PSIG	15400 & 15217	AIR	
BREATHING AIR	SERVICE AIR PIPING	WELDED, SOLDERED	SSL, COPPER	ASTM A 269	1/2" - 2"				
FIRE SPINKLER DISTRIBUTION	FIRE PROTECTION	GROOVED	STEEL	NFPA 13	SEE SPEC	X	15XXX	WATER	
PIEZOMETER & WATER LEVEL	CONTROL PIPING	WELDED	STAINLESS	ASTM A 269	X	X	15951	WATER	
ROOF WATER DRAINAGE	ROOF DRAINAGE PIPING	HUB, THREADED	CAST IRON	ASTM A 74	4"	5' HEAD AT ROOF SURFACE	XXXXX	WATER	

PLUMBING FIXTURE SCHEDULE

MARK NO.	DESCRIPTION	ROUGH-IN SIZE					REMARKS
		WASTE	VENT	NPW *	CW	HW	
P-1	WATER CLOSET	4	2	---	1	---	FLUSH TANK, WALL MTD, LOW FLOW
P-2	LAVATORY (WALL HUNG)	1¼	1½	---	¾	3/4	20"x17"; SEE SPEC
P-3	LAVATORY (KITCHEN COUNTERTOP)	1¼	1½	---	¾	¾	SINGLE BOWL
FD-1	FLOOR DRAIN, FINISHED FLOOR, TYPE 1	2	2	---	1/2 *	---	PROVIDE TRAP PRIMER (NOT SHOWN ON PLANS); SSL STRAINER
FD-2	FLOOR DRAIN, UNFINISHED FLOOR, TYPE 2	2	2	---	---	---	CI STRAINER
FD-3	FLOOR DRAIN, UNFINISHED FLOOR, TYPE 3	2	---	---	---	---	SSL STRAINER, GALVANIZED CI BODY PROVIDE FUNNEL WHERE INDICATED
FD-4	FLOOR DRAIN, UNFINISHED FLOOR, TYPE 4	4	---	---	---	---	CI STRAINER; W/ SEDIMENT BUCKET
FD-5	FLOOR DRAIN, UNFINISHED FLOOR, TYPE 5	4	---	---	---	---	CI STRAINER WITH REMOVABLE SEDIMENT BUCKET
FD-6	TRENCH DRAIN, CAST IRON, 12x36" OR EQUAL	6	---	---	---	---	PRECAST AREA DRAIN W/GRATING
RD-1	ROOF DRAIN	---	---	---	---	---	(SEE ARCHITECTURAL DRAWINGS)
WH	WALL HYDRANT	---	---	---	¾	---	FREEZE PROOF
HB	HOSE BIBBS UNDER LAVATORIES AND WHERE INDICATED	---	---	¾	¾	---	

* RAW RIVER WATER SYSTEM SHALL NOT BE INTERCONNECTED WITH THE POTABLE WELL WATER SUPPLY

EXPANSION JOINT SCHEDULE

	SERVICE	PRESSURE RATING (PSI)	PIPE SIZE	LOCATION	ORIENTATION	LENGTH APPROX	REMARKS
EJ-1	FW DRAIN & WW REFILL	50	10"	EL 1070	VERTICAL	24"	INSURE A MINIMUM OF 4" OF AXIAL AND 1.2" OF LATERAL MOVEMENT
EJ-2	PRESSURIZED RIVER WATER DISTRIBUTION	150	6"	EL 1061	HORIZONTAL	18"	INSURE A MINIMUM OF 3" OF AXIAL AND 0.6" OF LATERAL MOVEMENT
EJ-3	COMPRESSED AIR	150	2"	EL 1071	HORIZONTAL	7"	INSURE A MINIMUM OF 2" OF AXIAL AND 0.3" OF LATERAL MOVEMENT
EJ-4	PRESSURIZED RIVER WATER DISTRIBUTION	150	6"	EL 1061	HORIZONTAL	18"	INSURE A MINIMUM OF 3" OF AXIAL AND 0.6" OF LATERAL MOVEMENT
EJ-5	X						
EJ-6	X						

MODULAR PIPE SEAL (WATERSTOP) SCHEDULE

MARK	TYPE	LOCATION	ELEVATION	SERVICE	SLEEVE LENGTH	PIPE DIAMETER	REMARKS
PS-1	GROUTING RING	FISHWELL ACCESS GALLERY	EL 1051	RIVER WATER DISTRIBUTION	3'-6"	8"	LINK-SEAL OR EQUAL
PS-2	GROUTING RING	EL 1061.5 GALLERY	EL 1062	RIVER WATER DISTRIBUTION	3'	10"	
PS-3	GROUTING RING	TOWER AT NINTH FLOOR	EL 1176	SEWER	4'	4"	
PS-4	GROUTING RING	TOWER AT NINTH FLOOR	EL 1177	VENT	4'	1.5"	
PS-5	GROUTING RING	TOWER AT NINTH FLOOR	EL 1179	DRAIN	5'-6"	4"	
PS-6	GROUTING RING	FW ACCESS AT 1042	EL 1048	COMPRESSED AIR	3'-6"	1"	
PS-7	GROUTING RING	VARIOUS	EL 1042	PRESSURE SENSING (CONTROL)	1'	1/2"	
PS-X	GROUTING RING	X	X	X	X	X	
PS-X	GROUTING RING	X	X	X	X	X	
PS-X	GROUTING RING	X	X	X	X	X	

US Army Corps of Engineers
Seattle District

Symbol	Description	Date
Appr.		/ /

Designed by: DJB
Drawn by: DJB
Checked by:
Date: 16 MAR 06
File: E-56-14-19
Rev.

U.S. ARMY ENGINEER DISTRICT, SEATTLE
CORPS OF ENGINEERS
SEATTLE, WASHINGTON
Prepared by:

ADDITIONAL WATER STORAGE PROJECT
HOWARD HANSON DAM
PLUMBING
SCHEDULES II
GREEN RIVER WASHINGTON

Plate number:
P-602
Sheet of

I:\AECOM\DESIGNS\HHAWP\Plumbing\HHAWP-602e02.DGN
DESIGN FILE:
DATE AND TIME PLOTTED: 07-AUG-2008 11:38

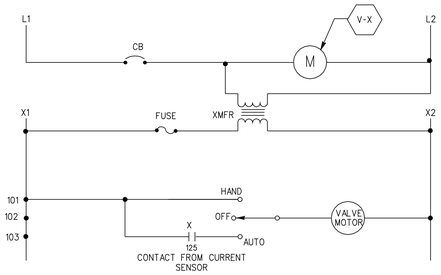

DRAIN VALVE ACTUATOR

OWS PUMPED OUTLET VALVE (V-X)
DESCRIPTION: REMOTELY ACTUATED GATE VALVE FOR ISOLATING THE GATE CHAMBER AND AIR SHAFT FROM THE SUMP ROOM OWS WITHIN THE TOWER.

A "HAND-OFF-AUTO" SWITCH SHALL BE USED TO OPERATE THE VALVE TO PROVIDE ISOLATION EXCEPT DURING OPERATION OF PUMP CP-7. IN THE "HAND" POSITION, THE VALVE SHALL OPEN AT ALL TIMES. IN THE "AUTO" POSITION, THE VALVE SHALL BE INTERLOCKED WITH THE CP-7 PUMP CIRCUIT CURRENT SENSOR TO OPEN WITH THE ENERGIZATION OF THE PUMP.

OIL WATER SEPARATOR & STATION DRAIN PUMPS

CP-5 PUMP OPERATION:

PUMP CP-5 SHALL BE SET TO ENERGIZE UPON AN ADJUSTABLE WATER LEVEL SENSOR SET POINT LOCATED WITHIN THE SUMP PUMP BASIN AS INDICATED ON P-501. THE WATER LEVEL SENSOR SHALL BE A PNEUMATIC FLOAT TYPE SWITCH. WHEN THE SUMP PUMP BASIN WATER LEVEL REACHES THE SETPOINT INDICATED, PUMP CP-5 SHALL ENERGIZE SO AS TO EMPTY THE SUMP BASIN AND PROVIDE A CONSTANT FLOW TO THE OWS AS INDICATED.

CP-6 PUMP OPERATION:

PUMP CP-6 SHALL BE SET TO ENERGIZE UPON AN ADJUSTABLE WATER LEVEL SENSOR SET POINT LOCATED WITHIN THE SUMP PUMP BASIN AS INDICATED ON P-501. THE WATER LEVEL SENSOR SHALL BE A PNEUMATIC FLOAT TYPE SWITCH. WHEN THE SUMP PUMP BASIN WATER LEVEL REACHES THE SETPOINT INDICATED, PUMP CP-6 SHALL ENERGIZE TO EMPTY THE SUMP BASIN AND BYPASS FLOW AROUND THE OWS AS INDICATED.

CP-7 PUMP OPERATION:

PUMP CP-7 SHALL BE SET TO ENERGIZE UPON AN ADJUSTABLE WATER LEVEL SENSOR SET POINT LOCATED AT THE OWS. WHEN THE INTERNAL OWS TANK (125 GALLON) FILLS TO NEAR MAX CAPACITY, PUMP CP-7 SHALL BE ENERGIZED TO EMPTY THE CONTENTS OF THE TANK. ENERGIZATION OF CP-7 SHALL CAUSE VALVE V-1 TO OPEN AUTOMATICALLY. VALVE V-1 SHALL CLOSE UPON DE-ENERGIZATION OF PUMP CP-7.

(FISH MONITORING STATION) LIFE SUPPORT PUMPS

CP-1 & CP-2 LIFE SUPPORT WATER PUMPS:

PUMPS PRIMARY DUTY IS TO PROVIDE WATER ON DEMAND AT THE MONITORING STATION (EL 1194). PUMP CP-1 SHALL BE SET TO ALTERNATE WTIH PUMP CP-2 AUTOMATICALLY. PUMPS SHALL BE SET TO ENERGIZE UPON A CALL FOR LIFE SUPPORT WATER AT THE FISH MONITORING STATION. AN "AUTO-OFF" SWITCH SHALL BE USED TO OPERATE THE PUMP TO PROVIDE LIFE SUPPORT WATER EXCEPT DURING MANUAL ISOLATION OF THE SYSTEM FOR SECONDARY FUNCTIONS. IN THE "AUTO" POSITION THE PUMP SHALL BE ENERGIZED AT ALL TIMES (UNLESS AN ALARM DUE TO MOTOR OVERLOAD OR SIMILAR FAULT OCCURS). IN THE "OFF" POSITION THE PUMP SHALL BE DE-ENERGIZED.

SECONDARY FUNCTIONS:

PUMPS CP-1 AND CP-2 ALSO PROVIDE WATER TO THE SLOT CLEANING NOZZLES (EXISTING--NOT IN CONTRACT) LOCATED AT THE BOTTOM OF THE DEWATERING STOPLOG SLOT (BOTH SIDES). MANUALLY OPERATED ISOLATION VALVES AT EL 1061.5 ARE TO BE USED TO DIRECT PUMPED FLOW TO EITHER THE LIFE SUPPORT FUNCTION OR THE SLOT CLEANING FUNCTION, OR BOTH, AS NEEDED.

OTHER SECONDARY FUNCTIONS:

DURING PUMP OPERATION, PRESSURIZED RIVER WATER IS AVAILABLE AT VARIOUS OTHER SMALL PIPE BRANCHES PROVIDED THE ISOLATION VALVES ARE OPENED TO ALLOW FLOW.

US Army Corps of Engineers
Seattle District

Symbol	Description	Date	Appr.	Symbol	Description
		/ /			

Designed by: DJB
Drawn by: DJB
Checked by:
Prepared by:
Date: 16 MAR 06
File • E-56-14-19
Rev.

U.S.ARMY ENGINEER DISTRICT,SEATTLE
CORPS OF ENGINEERS
SEATTLE, WASHINGTON

ADDITIONAL WATER STORAGE PROJECT
HOWARD HANSON DAM
MISC CONTROLS
GREEN RIVER WASHINGTON

Plate number:
P-755
Sheet of

DESIGN FILE: I:\AECDESIGNS\HHAW\Plumbing\HHAWP-755ct1.DGN
DATE AND TIME PLOTTED: 07-AUG-2008 11:39

MECHANICAL LEGEND

SYMBOL	DESCRIPTION
X / X1	DIAGRAM OR DETAIL INDICATOR DIAGRAM OR DETAIL NUMBER PLAN SHEET NUMBER
A	COMPRESSED AIR
C	CONTROL (CONDUIT NOT INDICATED; SEE ELEC)
D	DRAIN PIPING (ABOVE SLAB)
D	DRAIN PIPING (IMBEDDED IN SLAB OR UNDERGROUND)
H	HYDRAULIC OIL PIPING
RW	WATER (RAW RIVER)
S	SEWER
W	WATER (DOMESTIC WELL)
V	VENT (SEWER)
PG	PRESSURE GAUGE WITH GAUGE COCK
	HOSE FLEXIBLE CONNECTOR
	BRAIDED FLEXIBLE CONNECTOR
	CHECK VALVE
	GATE VALVE - MANUAL
	GATE VALVE - MANUAL
M	GATE VALVE - REMOTE ACTUATED (MOTOR)
	GATE VALVE - REMOTE ACTUATED (ACTUATION METHOD UNSPECIFIED)
	BALL VALVE - MANUAL
	BALL VALVE - REMOTE ACTUATED
	BUTTERFLY VALVE - MANUAL
	BUTTERFLY VALVE - REMOTE ACTUATED
	PIPE SIZE REDUCTION/EXPANSION
	COMPRESSED AIR SOLENOID VALVE
	2-WAY CONTROL VALVE
	3-WAY CONTROL VALVE
	DIRECTION OF PITCH DOWN
	DIRECTION OF FLOW
	PIPING UNION
	ELBOW TURN DOWN
	ELBOW TURN UP
	RISE OR DROP
	BRANCH - TOP CONNECTION
	BRANCH - BOTTOM CONNECTION
	BRANCH - SIDE CONNECTION
	CAPPED PIPING
D / R	ELBOW WITH TURNING VANES; DUCT ELBOWS WITHOUT VANES SHALL HAVE AN ASPECT RATIO (R/D) OF 1.5 OR GREATER
	MANUAL VOLUME DAMPER (REQUIRED ON DUCTS SERVING DIFFUSERS WITH OR WITHOUT INTERNAL DAMPER)
	FIRE DAMPER (REQUIRED ON DUCTS PENETRATING FIRE RATED WALLS, SEE SPECS)
	MANUAL VOLUME DAMPER

SYMBOL	DESCRIPTION
	BRANCH TAKE-OFF, TYPICAL: INCLUDES ADJUSTABLE TURNING VANE WITH COMMERCIAL AIR EXTRACTOR, MANUAL VOLUME DAMPER, DUCT RUNOUT, AND AIR DISTRIBUTION DEVICE. COMPONENT SIZES SHALL BE AS INDICATED; SEE SPECIFICATIONS, SCHEDULES, PLANS, AND M-594.
	DOUBLE LINE DUCT REPRESENTATION WITH RIGID DOUBLE LINE DUCT RUNOUT
	DOUBLE LINE DUCT REPRESENTATION WITH FLEXIBLE DOUBLE LINE DUCT RUNOUT
	SINGLE LINE DUCT REPRESENTATION WITH FLEXIBLE DOUBLE LINE DUCT RUNOUT
24/18	DUCT DIMENSION (DOUBLE LINE; INCHES) 1ST DIMENSION - SIDE SHOWN; 2ND DIMENSION - DEPTH
24/18	DUCT DIMENSION (SINGLE LINE; INCHES) 1ST DIMENSION - SIDE SHOWN; 2ND DIMENSION - DEPTH
24ø	DUCT DIMENSION (SINGLE LINE; INCHES) DIMENSION SHOWN - DIAMETER
	SUPPLY DUCT SECTION
	SUPPLY DUCT END ELEVATION
	EXHAUST, RETURN OR OUTSIDE AIR DUCT END SECTION
	EXHAUST, RETURN OR OUTSIDE AIR DUCT END ELEVATION
UH-X	UH-HORIZONTAL OUTLET UNIT HEATER
RH-X	RH-RADIANT HEATER, ELEC
	EF-EXHAUST FAN, CEILING MOUNTED
2 | 1	SMACNA DUCT PRESSURE CLASSIFICATION, IN. W.G.
RISE	DUCT CHANGE OF ELEVATION, RISE (R), DROP (D)
T	THERMOSTAT
A	COMPRESSED AIR TOOL OUTLET
BARP-X	BREATHING AIR RESPIRATORY PROTECTOR

MECHANICAL ABBREVIATIONS

AHU	AIR HANDLING UNIT
APD	AIR PRESSURE DROP
BD	BACKDRAFT DAMPER
BI	BACKWARD INCLINED
CD	CEILING DIFFUSER
CF	CENTRIFUGAL FAN
CFM	CUBIC FEET PER MINUTE
CP	CIRCULATING/CENTRIFUGAL PUMP
CR	CEILING REGISTER
DG	DOOR GRILLE, DIVERTER GATE
DWG	DRAWING
DWGS	DRAWINGS
EA	EACH / EXHAUST AIR
EAT	ENTERING AIR TEMP
EF	EXHAUST FAN
ER	EXHAUST REGISTER
ESP	EXTERNAL STATIC PRESSURE
EXH	EXHAUST
FD	FIRE DAMPER (ON PLMG DWGS FD=FLOOR DRAIN)
LAT	LEAVING AIR TEMP
MA	MIXED AIR
MD	MOTORIZED DAMPER
MOD	MOTOR OPERATED DAMPER
OA	OUTSIDE AIR
OBD	OPPOSED BLADE DAMPER
PLMG	PLUMBING
RA	RETURN AIR
RG	RETURN GRILLE / RADIAL GATE
RR	RETURN REGISTER
SA	SUPPLY AIR
SCFM	STANDARD CFM
SD	SMOKE DAMPER
SF	SUPPLY FAN / SQUARE FEET
SP	STATIC PRESSURE
TSP	TOTAL STATIC PRESSURE
UH	UNIT HEATER
VD	VOLUME DAMPER

NON–MECH'L ABBREVIATIONS

AFF	ABOVE FINISHED FLOOR
AL, ALUM	ALUMINUM
APPROX	APPROXIMATE
AWC	ATTRACTION WATER CONDUIT
BH	BULKHEAD
BHP	BRAKE HORSEPOWER
BLDG	BUILDING
BTU	BRITISH THERMAL UNITS
BTUH	BRITISH THERMAL UNITS PER HOUR
CAP	CAPACITY
CH	CHILLER / CABINET HEATER
CI	CAST IRON
CLG	CEILING
CONN	CONNECTION
CONT	CONTROL / CONTINUED
CTL	CONTROL
CTR	CONTRACTOR
CV	CONTROL VALVE
DI	DUCTILE IRON
DIA, \	DIAMETER
DN	DOWN
EFF	EFFICIENCY
EG	EXHAUST GRILLE, EMERGENCY GATE
EL / ELEV	ELEVATION
EMCS	ENERGY MONITORING & CONTROL SYSTEM
ENT	ENTERING
ET	EXPANSION TANK
EWT	ENTERING WATER TEMP
EXIST	EXISTING
EXT	EXTERNAL / EXTERIOR
°F	F DEGREE FAHRENHEIT
FC	FLEXIBLE CONNECTION / FORWARD CURVED / FISH COLLECTOR
FCT	FLOOD CONTROL TUNNEL
FD	FLOOR DRAIN
FDC	FIRE DEPARTMENT CONNECTION
FHR	FLOOR HEATING RETURN
FHS	FLOOR HEATING SUPPLY
FIXT	FIXTURE
FLEX	FLEXIBLE
FLR	FLOOR
FM	FLOW METER
FP	FIRE PROTECTION
FPF	FISH PASSAGE FACILITY
FPM	FEET PER MINUTE / FINS PER METER
FRP	FIBERGLASS REINFORCED PLASTIC
FS	FLOW SENSOR

NON–MECH'L ABBREVIATIONS (CONTINUED)

FT	FEET
FV	FACE VELOCITY / AUTOMATIC FILL VALVE
FW	FISH WELL
GAL	GALLON
GCO	GROUND CLEANOUT
GFCI	GOVT FURNISHED CTR INSTALLED
GOVT	GOVERNMENT
GPH	GALLONS PER HOUR
GPM	GALLONS PER MINUTE
H	HOPPER
HC	HEATING COIL
HE	HEAT EXCHANGER
HP	HORSEPOWER
HPU	HYDRAULIC POWER UNIT
HT	HEIGHT
HTG	HEATING
HV	HEATING AND VENTILATING
HVAC	HEATING, VENTILATING & AIR CONDITIONING
HW	DOMESTIC HOT WATER
HZ	HERTZ
IAW	IN ACCORDANCE WITH
ID	INSIDE DIAMETER
IE	INVERT ELEVATION
IFS	INCLINED FISH SCREEN
IN	INCH
IS	INCLINED SCREEN
IWG	INCHES WATER GAGE
IV	ISOLATION VALVE
KW	KILOWATT
LB	POUND
LR	LONG RADIUS
LS	LEVEL SENSOR
LVG	LEAVING
LVDT	LINEAR VARIABLE DIFFERENTIAL TRANSFORMER
LWT	LEAVING WATER TEMP
M	METER, MOTOR
MAX	MAXIMUM
MBH	1000 BTUH
MCA	MINIMUM CIRCUIT AMPACITY
MECH	MECHANICAL
MECH'L	MECHANICAL
MIN	MINIMUM / MINUTE
MTD	MOUNTED
MTG	MOUNTING
N	NORTH
NA	NOT APPLICABLE
NC	NORMALLY CLOSED
NIC	NOT IN CONTRACT
NO	NORMALLY OPEN
NO.	NUMBER
NOM	NOMINAL
NTS	NOT TO SCALE
OD	OUTSIDE DIAMETER
OPER	OPERATING
OPNG	OPENING
OS&Y	OUTSIDE SCREW & YOKE
PD	PRESSURE DROP
PH, \	PHASE
POC	POINT OF CONNECTION
PRESS	PRESSURE
PROP	PROPELLER
PRV	PRESSURE REDUCING VALVE
PSI	POUNDS PER SQUARE INCH
PSIG	POUNDS PER SQUARE INCH GAUGE
QTY	QUANTITY
REQ'D	REQUIRED
RM	ROOM
RPM	REVOLUTIONS PER MINUTE
RQMT	REQUIREMENT
SEC	SECOND
SENS	SENSIBLE
SG	SLIDE GATE
SMACNA	SHEET METAL & AIR CONDITIONING CONTRACTORS' NATIONAL ASSOCIATION
SPLY	SUPPLY
SQ FT	SQUARE FEET
STD	STANDARD
STL	STEEL
STS, SSL	STAINLESS STEEL
SYST	SYSTEM
TEMP	TEMPERATURE
TG	TRANSFER GRILLE
TYP	TYPICAL
V	VENT
VA	VALVE
VEL	VELOCITY
W	(WELL) WATER
W/	WITH
WB	WET BULB
WC	WATER COLUMN
WG	WATER GAGE
WPD	WATER PRESSURE DROP
WT	WEIGHT
WTR	WATER
WW	WET WELL

NOTES:

1. IN GENERAL, PLUMBING ITEMS ARE SHOWN IN GREY-TONE ON THE MECHANICAL PLANS; MECHANICAL ITEMS ARE SHOWN IN GREY-TONE ON THE PLUMBING PLANS.

2. SEE P-001 FOR PLUMBING ABBREVIATIONS.

US Army Corps of Engineers
Seattle District

No.	Description	Symbol	Appr.	Date
				/ /

Designed by: BRANDT
Drawn by: BRANDT
Checked by: BRANDT

Date: 16 MAR 06
File: E-56-14-19
Rev.

U.S.ARMY ENGINEER DISTRICT, SEATTLE
CORPS OF ENGINEERS
SEATTLE, WASHINGTON
Prepared by:

ADDITIONAL WATER STORAGE PROJECT
HOWARD HANSON DAM
GREEN RIVER WASHINGTON

LEGEND AND ABBREVIATIONS

Plate number: M-001
Sheet of

DESIGN FILE: J:\AECDESIGNS\HHAW\Mechanical\HHAWM-001001.DGN
DATE AND TIME PLOTTED: 07-AUG-2008 11:39

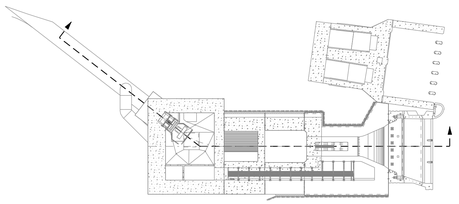

LOCATION OF SECTION CUT THROUGH CONCRETE STRUCTURE

NTS

FISH PASSAGE FACILITY CENTERLINE SECTION CUT, VIEWING NORTH

NTS

NOTES:

1. NOT ALL EQUIPMENT IS SHOWN FOR CLARITY.

2. FISH WELL LIFTING HOPPER NOT SHOWN (SEE PORTION OF DRAWING PACKAGE CONTAINING FISH MONITORING STATION PLANS).

3. SEE STRUCTURAL DRAWINGS FOR DETAILS OF THE CONCRETE STRUCTURE, THE IFS, THE MITER GATE, AND THE FISH WELL DRAIN SCREEN.

US Army Corps of Engineers
Seattle District

Symbol	Description	Date	Appr.	Description
		/ /		

U.S.ARMY ENGINEER DISTRICT,SEATTLE
CORPS OF ENGINEERS
SEATTLE, WASHINGTON

Designed by: EC
Drawn by: EC
Checked by: X
Prepared by:

Date: 16 MAR 06
File: E-56-14-19
Rev.

ADDITIONAL WATER STORAGE PROJECT
HOWARD HANSON DAM

FPF EQUIPMENT LAYOUT

GREEN RIVER WASHINGTON

Plate number:
M-002
Sheet of

DATE AND TIME PLOTTED: 07-AUG-2008 11:39
DESIGN FILE: J:\AECDESIGNS\HHAW\Mechanical\HHAWM-002AXX.DGN

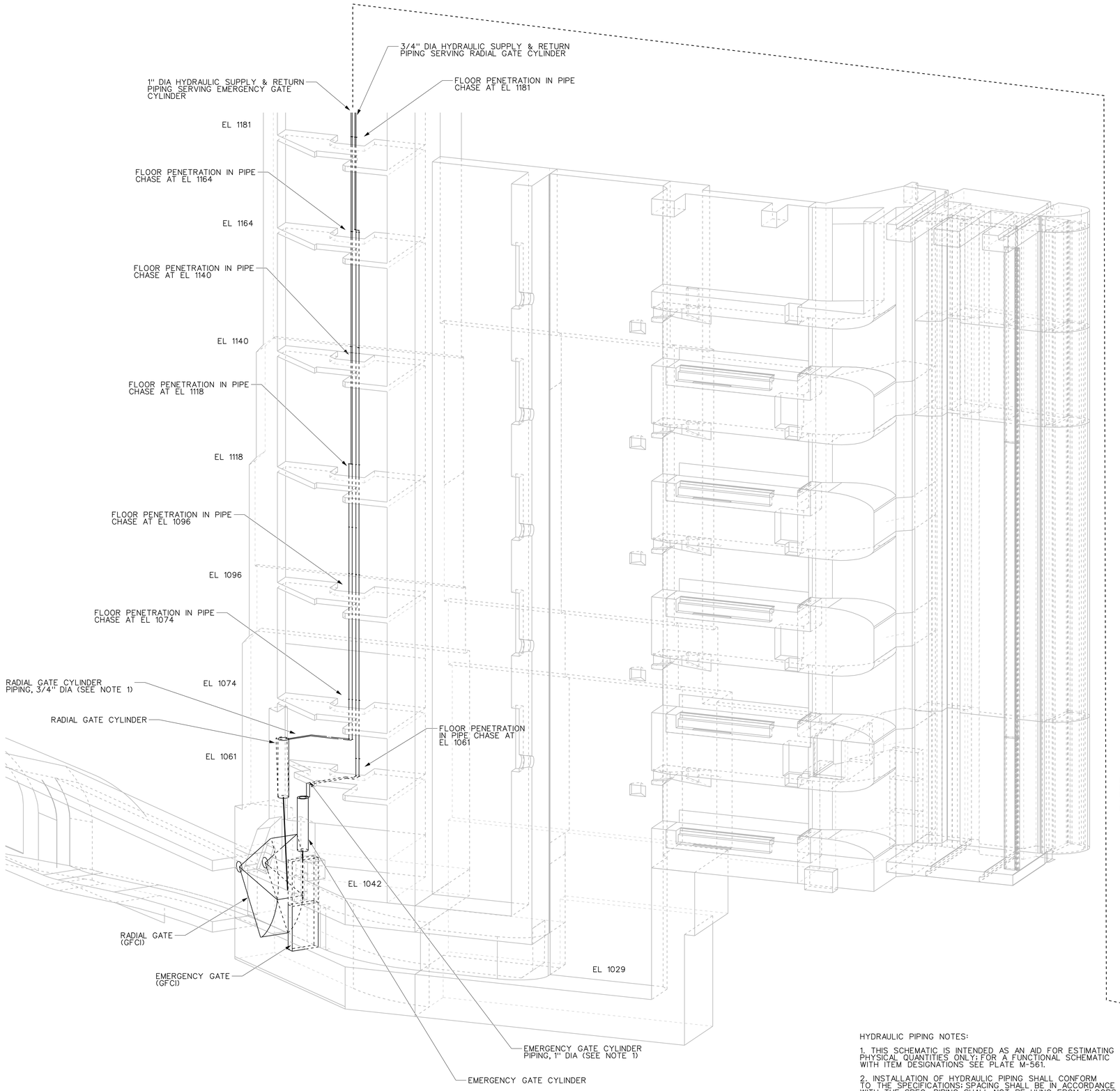

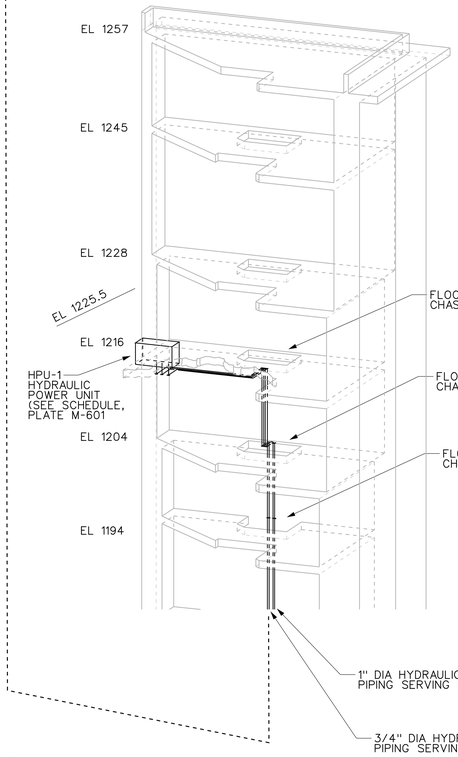

AWC HYDRAULIC PIPE ISOMETRIC

NTS

HYDRAULIC PIPING NOTES:

1. THIS SCHEMATIC IS INTENDED AS AN AID FOR ESTIMATING PHYSICAL QUANTITIES ONLY; FOR A FUNCTIONAL SCHEMATIC WITH ITEM DESIGNATIONS SEE PLATE M-561.

2. INSTALLATION OF HYDRAULIC PIPING SHALL CONFORM TO THE SPECIFICATIONS; SPACING SHALL BE IN ACCORDANCE WITH THE SPEC. PIPING SHALL NOT BE HUNG FROM FLOORS.

US Army Corps of Engineers
Seattle District

Symbol	Description	Date	Appr.	Symbol	Description
		/ /			

Designed by: DJB
Drawn by: DJB
Checked by:
Prepared by:

U.S.ARMY ENGINEER DISTRICT,SEATTLE
CORPS OF ENGINEERS
SEATTLE, WASHINGTON

Date: 16 MAR 06
File: E-56-14-19
Rev.

ADDITIONAL WATER STORAGE PROJECT
HOWARD HANSON DAM

AWC HYDRAULIC PIPING ISOMETRIC

GREEN RIVER WASHINGTON

Plate number: M-003
Sheet of

FILE: I:\AECDesigns\HHAW\Mechanical\HHAWM-003hyd.dgn
DATE AND TIME PLOTTED: 07-AUG-2008 12:45
DESIGN FILE: I:\AECDesigns\HHAW\Mechanical\HHAWM-003hyd.dgn

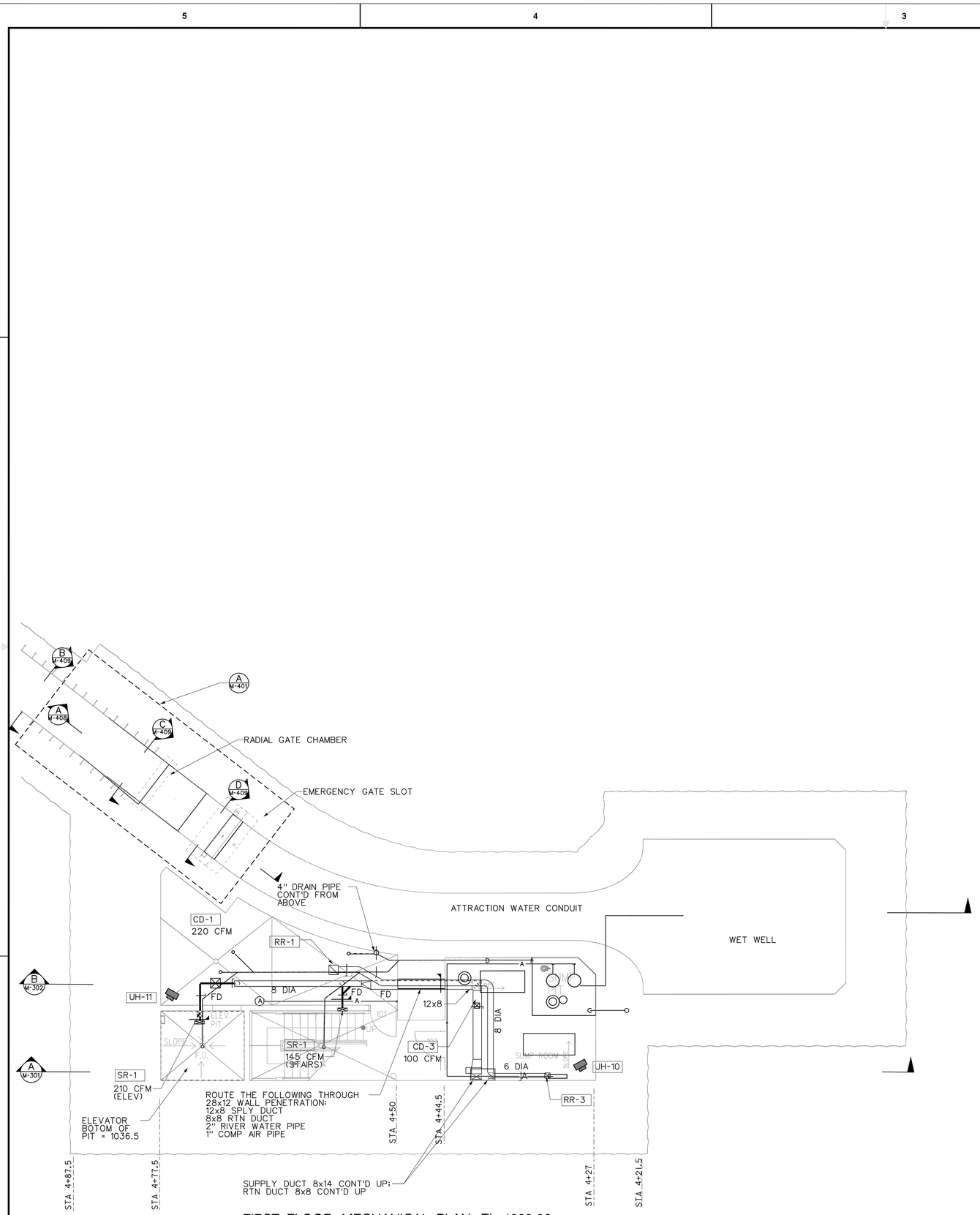

FIRST FLOOR MECHANICAL PLAN EL: 1029.00

3/16" = 1'-0" 5' 0 5' 10'

NOTES:

1. FOR PIPE AND OTHER UTILITIES SHOWN IN GREY TONE, REFER TO PLUMBING SHEETS

N

US Army Corps of Engineers
Seattle District

Symbol	Description	Appr.	Date
			/ /

Designed by:
Drawn by:
Checked by:
Prepared by:

Date: 16 MAR 06
File * E-56-14-19
Rev.

U.S.ARMY ENGINEER DISTRICT,SEATTLE
CORPS OF ENGINEERS
SEATTLE, WASHINGTON

ADDITIONAL WATER STORAGE PROJECT
HOWARD HANSON DAM
GREEN RIVER WASHINGTON

MECHANICAL PLAN
EL 1029

Plate number:
M-101
Sheet of

DATE AND TIME PLOTTED: 07-AUG-2008 11:41
DESIGN FILE: I:\AECDESIGNS\HHAW Mechanical\HHAWM-101m01.DGN
DJB

LEROY 80

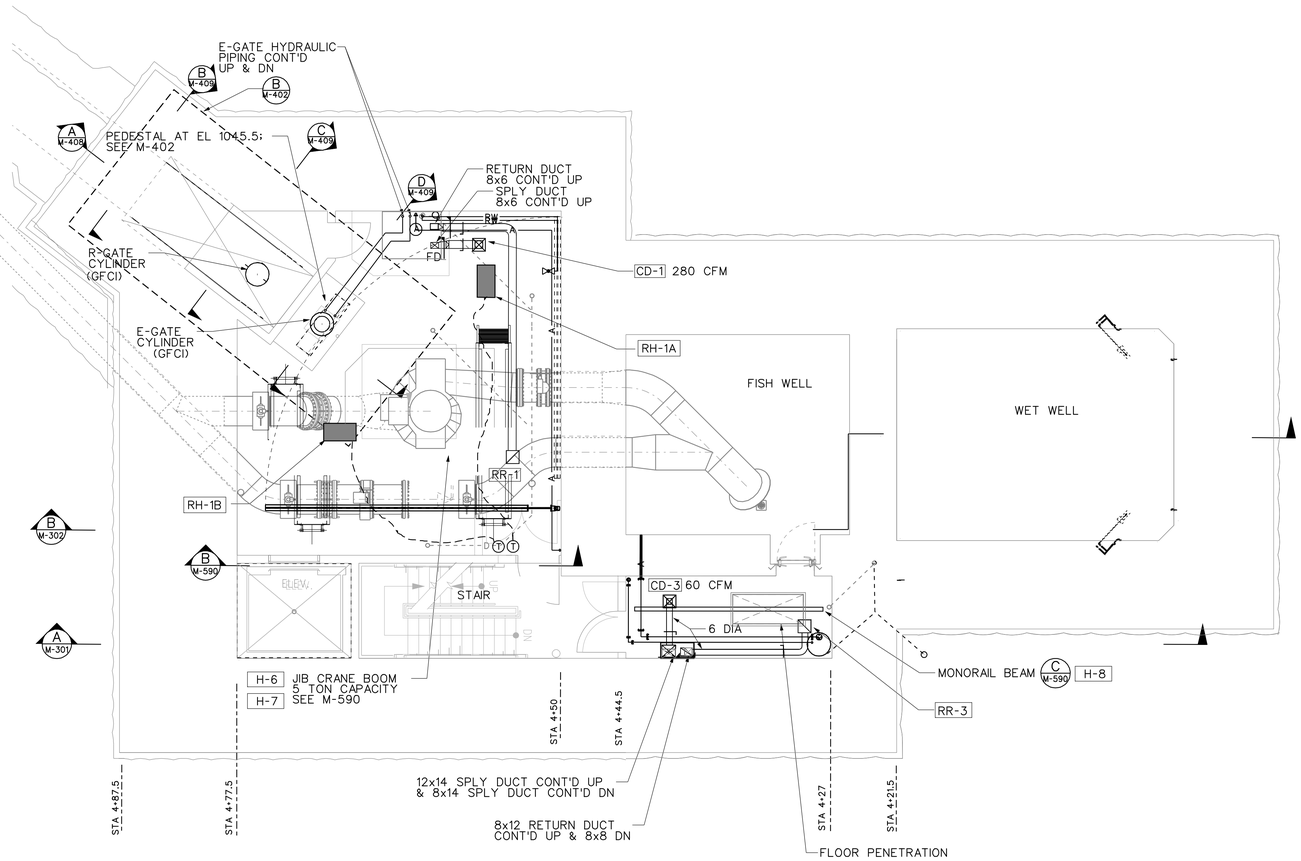

SECOND FLOOR MECHANICAL PLAN EL: 1042.00

3/16" = 1'-0" 5' 0 5' 10'

NOTES:

1. FOR PIPE AND OTHER UTILITIES SHOWN IN GREY TONE, REFER TO PLUMBING SHEETS.

2. CONTRACTOR TO PROVIDE FOUNDATION DESIGN FOR MONO-RAIL BEAM IN ACCORDANCE WITH MANUFACTURER RECOMMENDATIONS; SEE SPECIFICATION.

3. FOR CRANE DETAILS SEE M-590.

US Army Corps of Engineers
Seattle District

Symbol	Description	Date	Appr.	Symbol	Description
		/ /			

U.S.ARMY ENGINEER DISTRICT,SEATTLE
CORPS OF ENGINEERS
SEATTLE, WASHINGTON
Prepared by:

Designed by: DJB, EC
Drawn by: DJB, EC
Checked by:

Date: 16 MAR 06
File * E-56-14-19
Rev.

ADDITIONAL WATER STORAGE PROJECT
HOWARD HANSON DAM
GREEN RIVER WASHINGTON

MECHANICAL PLAN
EL 1042

Plate number:
M-102
Sheet of

DATE AND TIME PLOTTED: 07-AUG-2008 11:42
DESIGN FILE: P:\ACCDESIGNS\HHAW\Mechanical\HHAWM-102m02.DGN

NOTES:

1. FOR PIPE AND OTHER UTILITIES SHOWN IN GREY TONE, REFER TO PLUMBING SHEETS

2. FOR 2 HOUR FIRE WALL ENCLOSURE DETAILS, SEE ARCHITECTURAL DRAWINGS.

3. FOR TRENCH DRAIN BLOCK-OUTS SEE STRUCTURAL DRAWINGS.

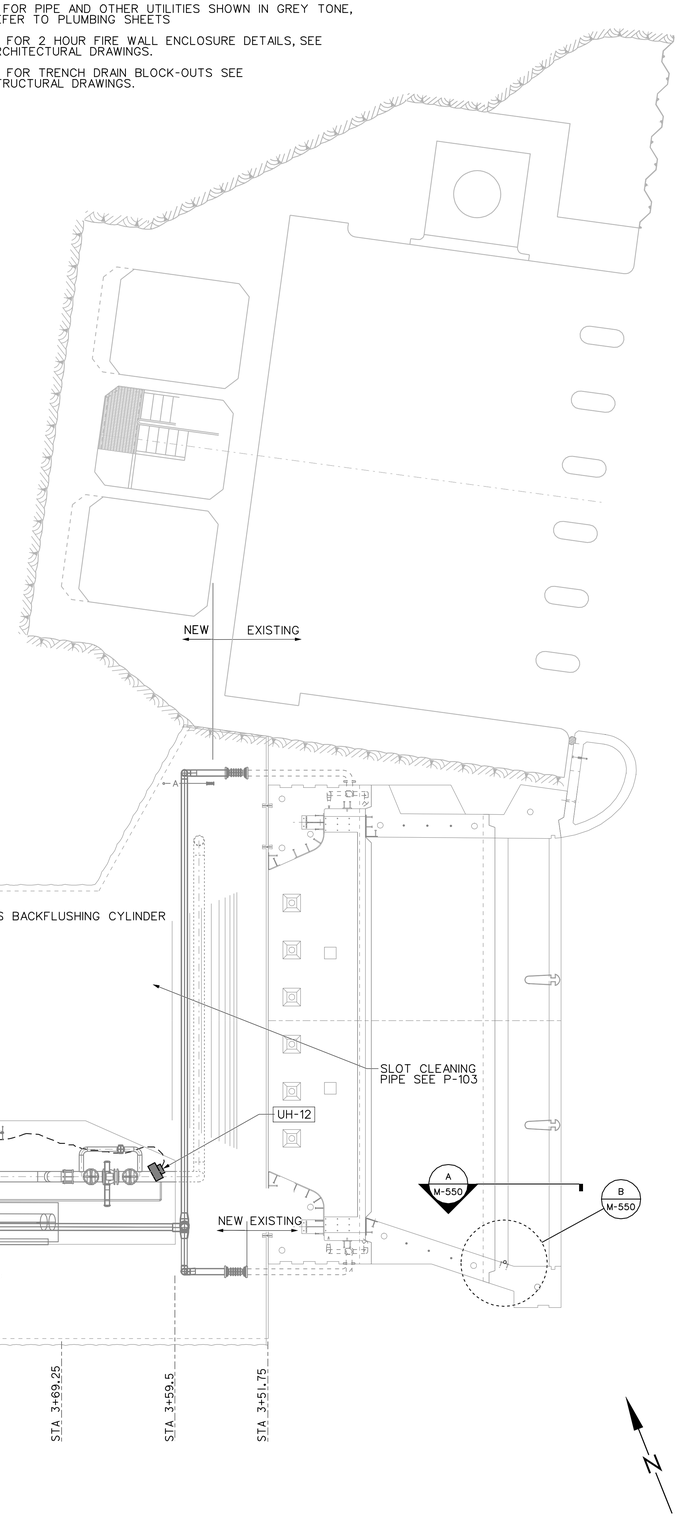

E-GATE HYDRAULIC PIPING CONT'D UP & DN

RETURN AIR DUCT 12x12 CONT'D UP & 6x8 CONT'D DN

SPLY AIR DUCT 14x14 CONT'D UP & 6x8 CONT'D DN

R-GATE HYDRAULIC PIPING CONT'D UP

H

H

FD

270 CFM

CD-1

SEAL ALL AIR SHAFT PENETRATIONS TO PREVENT AIR EXCHANGE; SEE DETAIL PLATE P-502

RETURN DUCT 12x10

RR-1

DROP

FD

ELEV.

RR-2

SEE NOTE 2

ROUTE THE FOLLOWING THROUGH WALL PENETRATION: 14x12 SPLY DUCT 6" RIVER WATER PIPE

FISHWELL

RETURN DUCT 8x12 CONT'D UP

CD-2

400 CFM

FD

FD

FD

SPLY DUCT 12x14 CONT'D DN
RETURN DUCT 8x12 CONT'D DN

WETWELL

NORTH MITER GATE CYLINDER

SOUTH MITER GATE CYLINDER

4th FLOOR GALLERY

COLLECTOR #1

IFS BACKFLUSHING CYLINDER

8x8 EXHAUST DUCT CONT'D UP

ER-8

ER-2

20x20 CONT'D UP

SLOT CLEANING PIPE SEE P-103

UH-12

NEW EXISTING

A
M-550

B
M-550

SEE NOTE 3

STA 4+87.5

STA 4+77.5

STA 4+50

STA 4+21.5

STA 3+99.25

STA 3+69.25

STA 3+59.5

STA 3+51.75

THIRD FLOOR MECHANICAL PLAN EL: 1061.53

3/16" = 1'-0" 5' 0 5' 10'

US Army Corps of Engineers
Seattle District

Symbol	Description	Date	Appr.	Symbol	Description
		/ /			

Designed by: DJB, EC
Drawn by: DJB, EC
Checked by:
Date: 16 MAR 06
File: E-56-14-19
Rev.

U.S.ARMY ENGINEER DISTRICT, SEATTLE
CORPS OF ENGINEERS
SEATTLE, WASHINGTON
Prepared by:

ADDITIONAL WATER STORAGE PROJECT
HOWARD HANSON DAM
GREEN RIVER WASHINGTON

MECHANICAL PLAN EL 1061.5

Plate number: M-103
Sheet of

DESIGN FILE: J:\AECDESIGNS\HHAW\Mechanical\HHAWM-103M03.DGN
DATE AND TIME PLOTTED: 07-AUG-2008 11:43

NOTES:

1. FOR PIPE AND OTHER UTILITIES SHOWN IN GREY TONE, REFER TO PLUMBING SHEETS

2. FOR 2 HOUR FIRE WALL ENCLOSURE DETAILS, SEE ARCHITECTURAL DRAWINGS.

3. FOR TRENCH DRAIN BLOCK-OUTS SEE STRUCTURAL DRAWINGS.

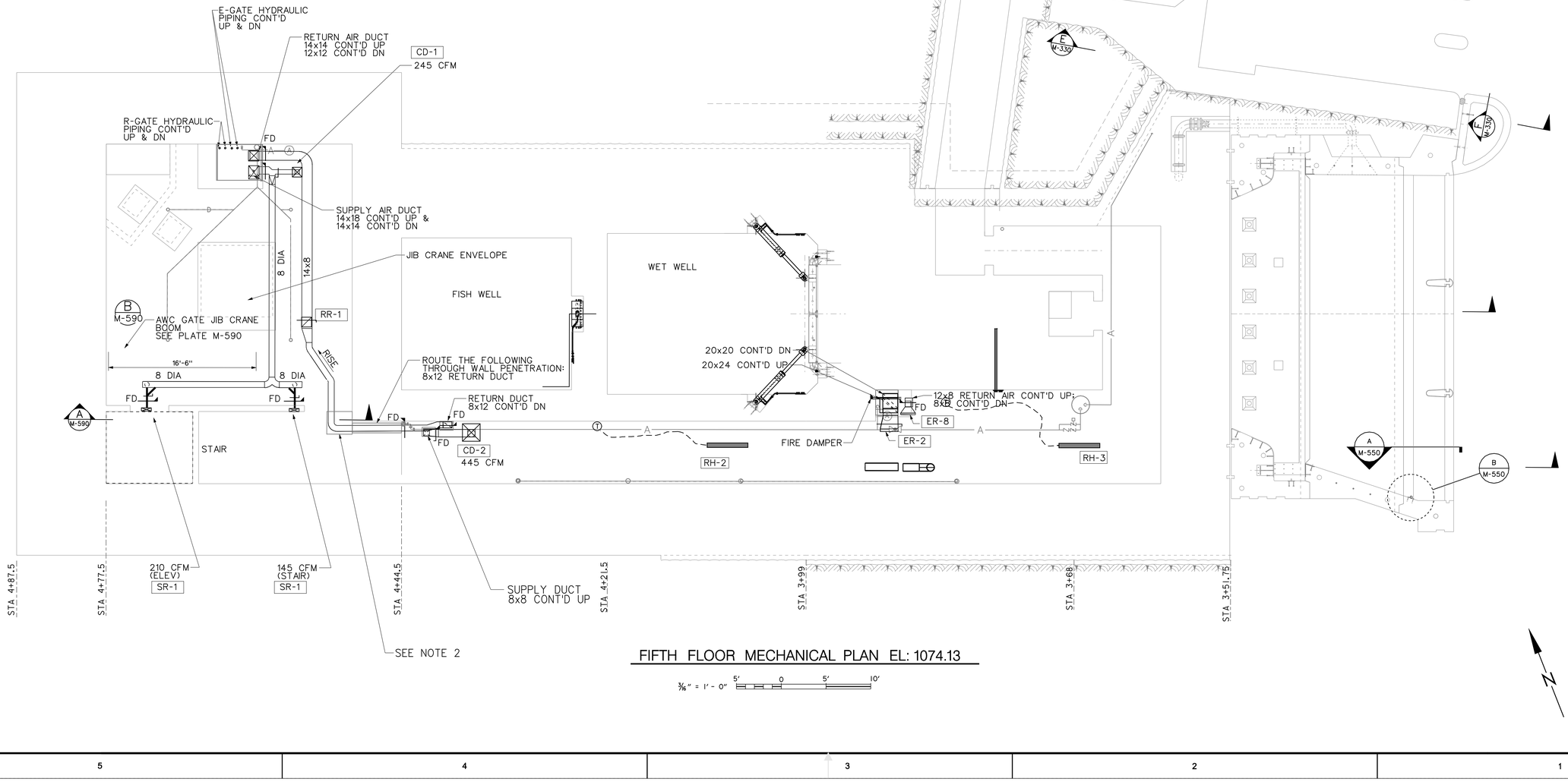

FIFTH FLOOR MECHANICAL PLAN EL: 1074.13

3/16" = 1'-0" 5' 0 5' 10'

US Army Corps of Engineers
Seattle District

Symbol	Description	Date	Appr.	Symbol	Description
		/ /			

Designed by: DJB, EC
Drawn by: DJB, EC
Checked by:
Date: 16 MAR 06
File: E-56-14-19
Rev.

U.S. ARMY ENGINEER DISTRICT, SEATTLE
CORPS OF ENGINEERS
SEATTLE, WASHINGTON
Prepared by:

ADDITIONAL WATER STORAGE PROJECT
HOWARD HANSON DAM
GREEN RIVER WASHINGTON

MECHANICAL PLAN
EL 1074

Plate number:
M-104
Sheet of

DATE AND TIME PLOTTED: 07-AUG-2008 11:43 DESIGN FILE: J:\ACEDESIGNS\HHAW\Mechanical\HHAWM-104M04.DGN

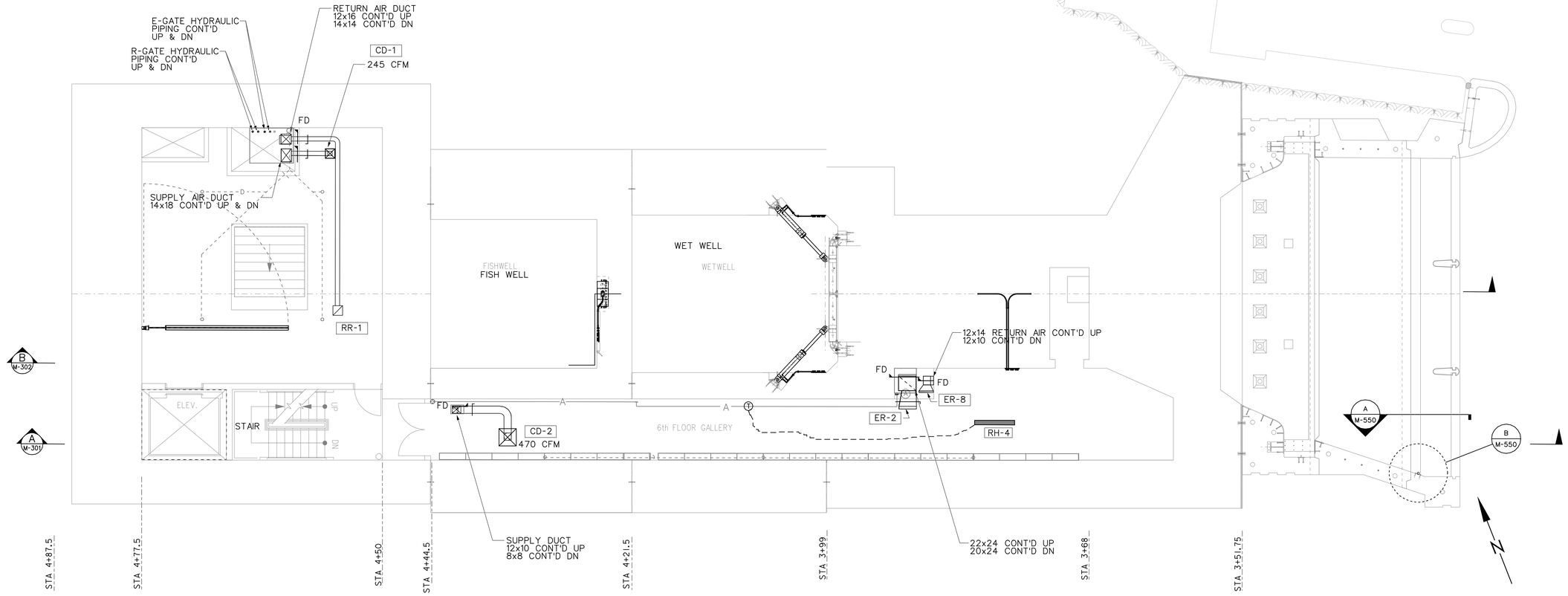

SIXTH FLOOR MECHANICAL PLAN EL: 1096.09

3/16" = 1'-0" 5' 0 5' 10'

NOTES:

1. FOR PIPE AND OTHER UTILITIES SHOWN IN GREY TONE, REFER TO PLUMBING SHEETS.

US Army Corps of Engineers
Seattle District

Symbol	Description	Date	Appr.	Symbol	Description
		/ /			

U.S.ARMY ENGINEER DISTRICT,SEATTLE
CORPS OF ENGINEERS
SEATTLE, WASHINGTON
Prepared by:

Designed by: DJB, EC
Drawn by: DJB, EC
Checked by:
Date: 16 MAR 06
File: E-56-14-19
Rev.

ADDITIONAL WATER STORAGE PROJECT
HOWARD HANSON DAM
GREEN RIVER WASHINGTON

MECHANICAL PLAN
EL 1096

Plate number:
M-105
Sheet of

DATE AND TIME PLOTTED: 07-AUG-2008 11:43
DESIGN FILE: J:\AECDESIGNS\HHAW\Mechanical\HHAWM-105MOS.DGN

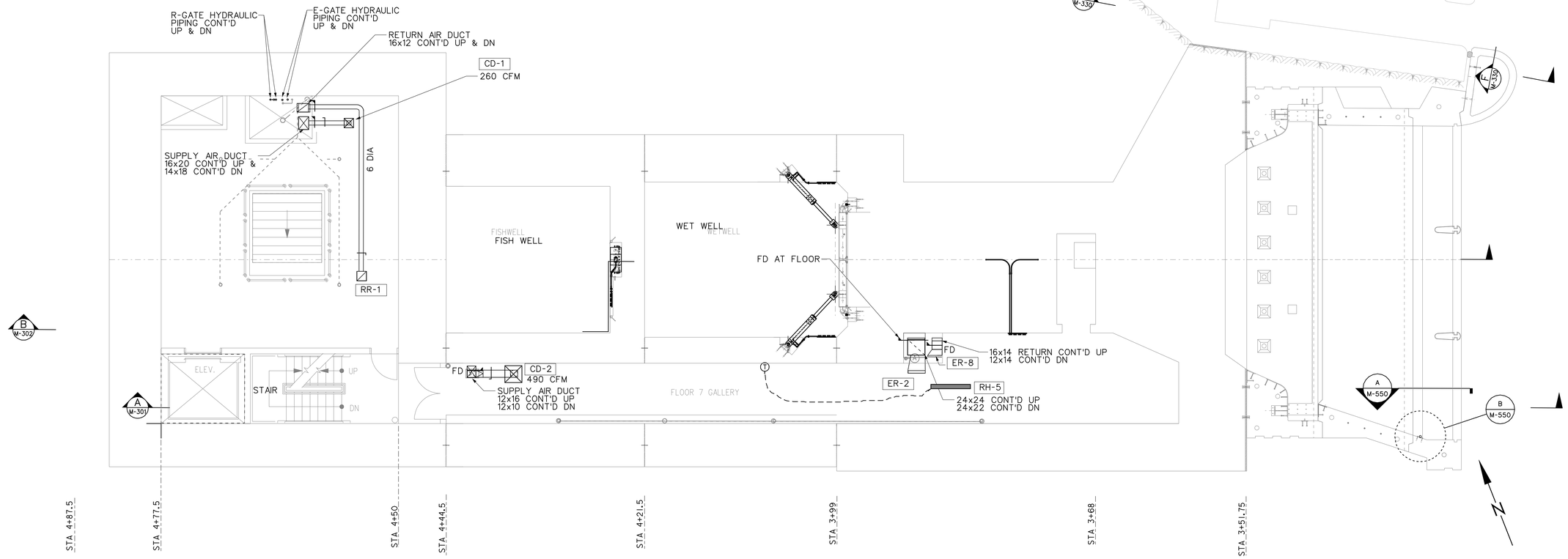

SEVENTH FLOOR MECHANICAL PLAN EL: 1118.05

3/16" = 1'-0" 5' 0 5' 10'

NOTES:

1. FOR PIPE AND OTHER UTILITIES SHOWN IN GREY TONE, REFER TO PLUMBING SHEETS.

US Army Corps of Engineers
Seattle District

Symbol	Description	Date	Appr.	Symbol	Description
		/ /			

Date: 16 MAR 06
File • E-56-14-19
Rev.

Designed by: DJB, EC
Drawn by: DJB, EC
Checked by:

U.S.ARMY ENGINEER DISTRICT,SEATTLE
CORPS OF ENGINEERS
SEATTLE, WASHINGTON
Prepared by:

ADDITIONAL WATER STORAGE PROJECT
HOWARD HANSON DAM
GREEN RIVER WASHINGTON

MECHANICAL PLAN
EL 1118

Plate number:
M-106
Sheet of

DATE AND TIME PLOTTED: 07-AUG-2008 11:44
DESIGN FILE: F:\ACCDESIGNS\HHAW\Mechanical\HHAWM-106M06.DGN

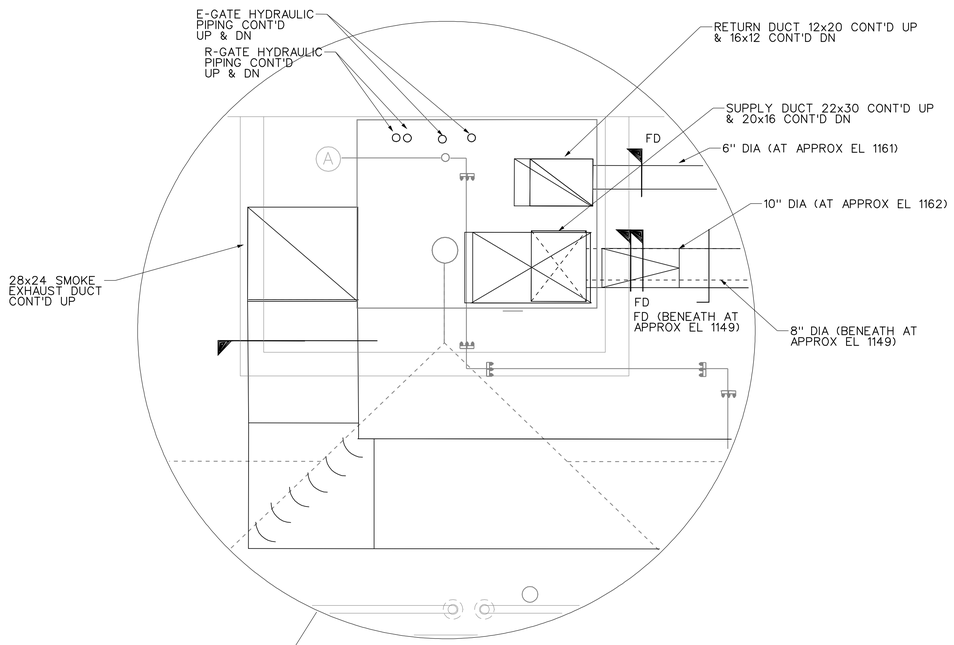

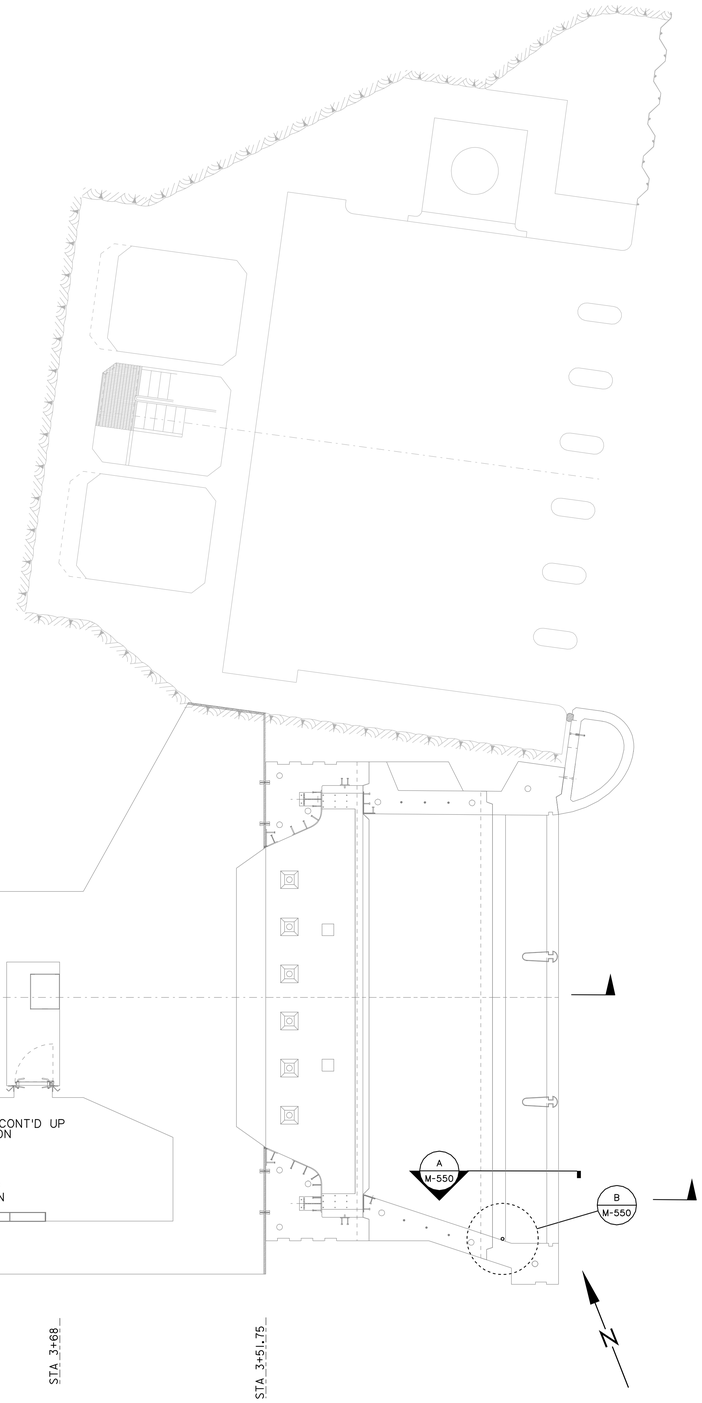

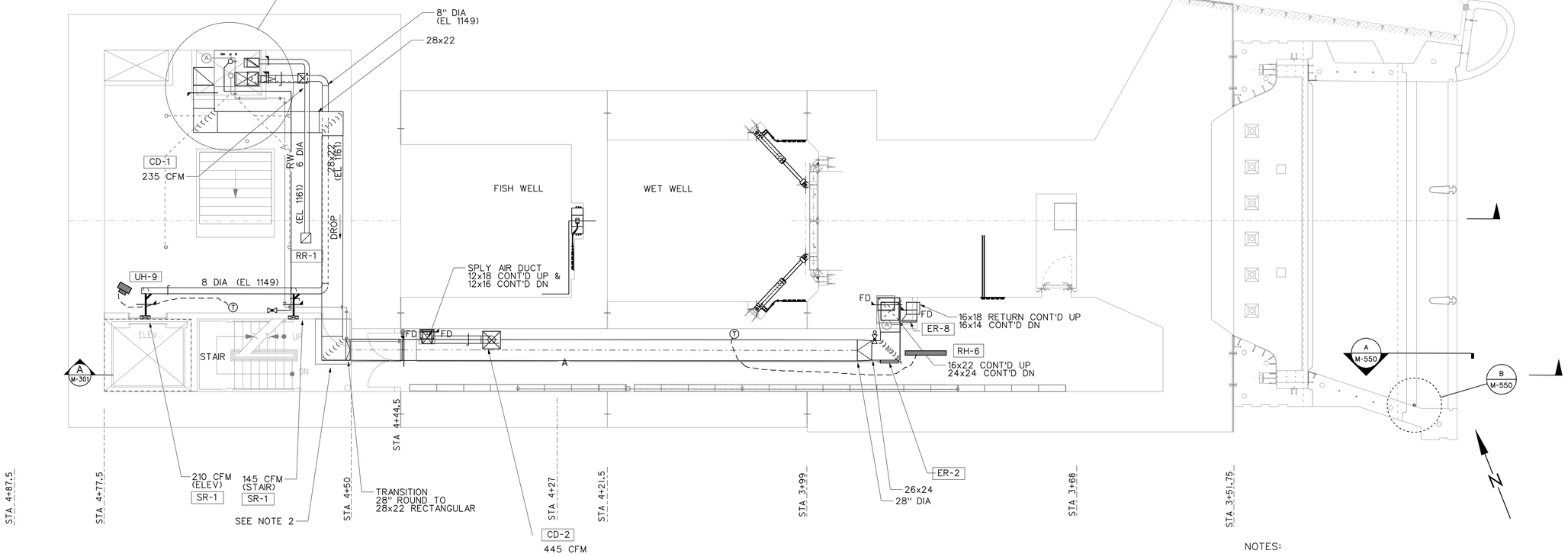

EIGHTH FLOOR MECHANICAL PLAN EL: 1140.01

3/16" = 1'-0" 5' 0 5' 10'

NOTES:

1. FOR PIPE AND OTHER UTILITIES SHOWN IN GREY TONE, REFER TO SHEETS P-101 THRU P-113.

2. FOR 2 HOUR FIRE WALL ENCLOSURE DETAILS, SEE ARCHITECTURAL DRAWINGS.

3. FOR TRENCH DRAIN BLOCK-OUTS SEE STRUCTURAL DRAWINGS.

US Army Corps of Engineers
Seattle District

Symbol	Description	Date	Appr.	Symbol	Description
		/ /			

Designed by: DJB, EC
Drawn by: DJB, EC
Checked by:
Date: 16 MAR 06
File: E-56-14-19
Rev.

U.S.ARMY ENGINEER DISTRICT, SEATTLE
CORPS OF ENGINEERS
SEATTLE, WASHINGTON
Prepared by:

ADDITIONAL WATER STORAGE PROJECT
HOWARD HANSON DAM
MECHANICAL PLAN
EL 1140
GREEN RIVER WASHINGTON

Plate number:
M-107
Sheet of

DESIGN FILE: I:\AECDESIGNS\HHAW\Mechanical\HHAWM-107M07.DGN
DATE AND TIME PLOTTED: 07-AUG-2008 11:44

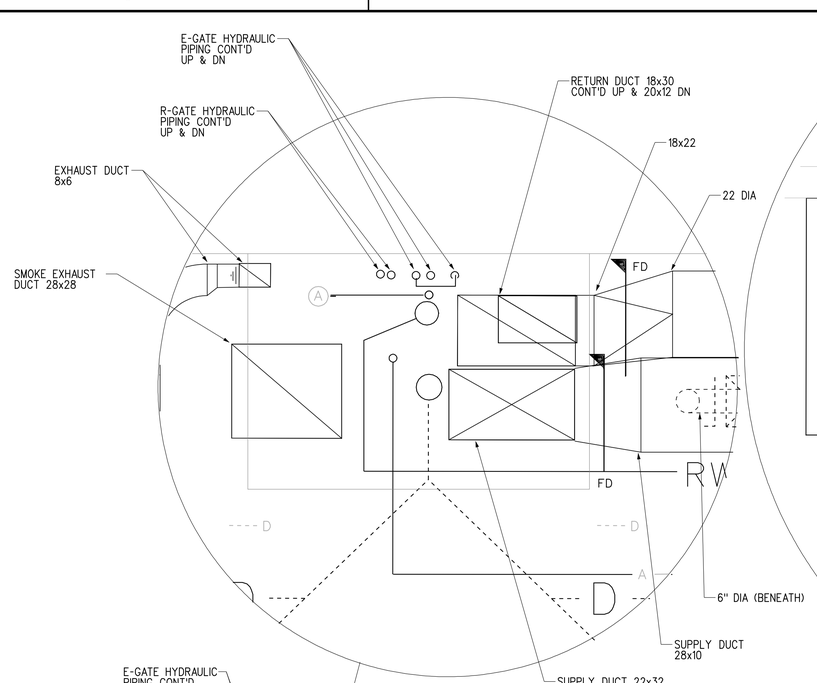

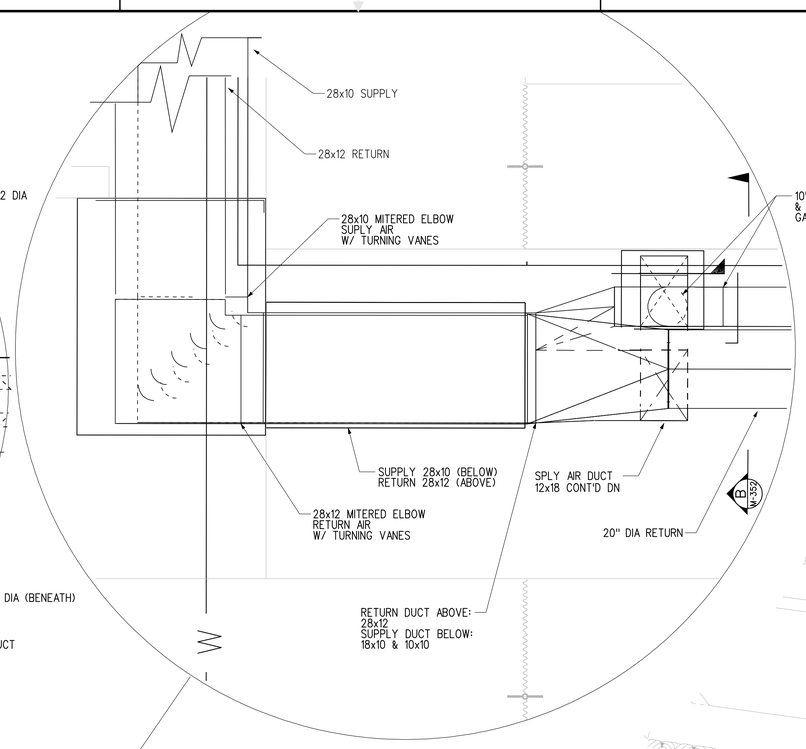

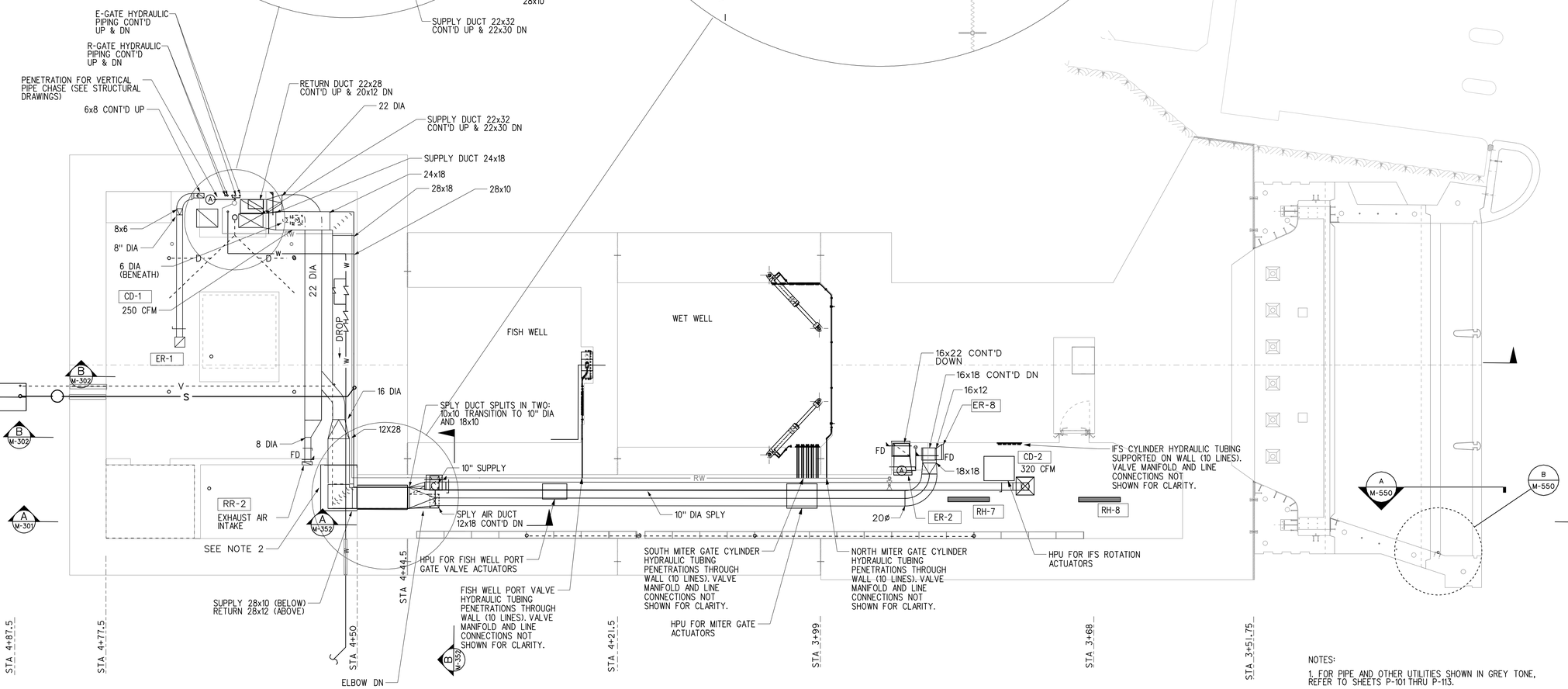

NINTH FLOOR MECHANICAL PLAN EL: 1163.38

3/8" = 1'-0" 5' 0 5' 10'

NOTES:

1. FOR PIPE AND OTHER UTILITIES SHOWN IN GREY TONE, REFER TO SHEETS P-101 THRU P-113.
2. FOR 2 HOUR FIRE WALL ENCLOSURE DETAILS, SEE ARCHITECTURAL DRAWINGS.
3. FOR TRENCH DRAIN BLOCK-OUTS SEE STRUCTURAL DRAWINGS.

US Army Corps of Engineers
Seattle District

Symbol	Description	Appr.	Date
			/ /

Designed by: DJB, EC
Drawn by: DJB, EC
Checked by:
Date: 16 MAR 06
File: E-56-14-19
Rev.

U.S.ARMY ENGINEER DISTRICT,SEATTLE
CORPS OF ENGINEERS
SEATTLE, WASHINGTON
Prepared by:

ADDITIONAL WATER STORAGE PROJECT
HOWARD HANSON DAM
GREEN RIVER WASHINGTON

MECHANICAL PLAN
EL 1163

Plate number:
M-108
Sheet of

DESIGN FILE: I:\AECDESIGNS\HHAW\Mechanical\HHAWM-10BM08.DGN
DATE AND TIME PLOTTED: 07-AUG-2008 11:45

NOTES:

1. FOR PIPE AND OTHER UTILITIES SHOWN IN GREY TONE, REFER TO PLUMBING SHEETS.

2. CONTROL CONDUIT SHOWN FOR SENSORS MOUNTED ON COFFERDAM ONLY. (CONDUIT FOR ALL OTHER SENSORS AND CONTROLS NOT SHOWN.) APPROXIMATE ROUTING SHOWN FOR CLARITY: CONTRACTOR TO DETERMINE EXACT ROUTING AND COORDINATE WITH STRUCTURAL.

3. CONTROL WIRE FOR LEVEL SENSOR (AT COFFERDAM) SHALL BE ROUTED IN CONDUIT WHERE BELOW GROUND OR ENCASED IN CONCRETE, AND EXPOSED WHERE ABOVE GROUND. WHERE WIRE ENTERS CONDUIT, CONDUIT SHALL BE PROTECTED FROM WATER INTRUSION (IN CASE OF FLOOD) BY AN APPROPRIATE CONDUIT SEALING BUSHING (SEE DETAIL XXX).

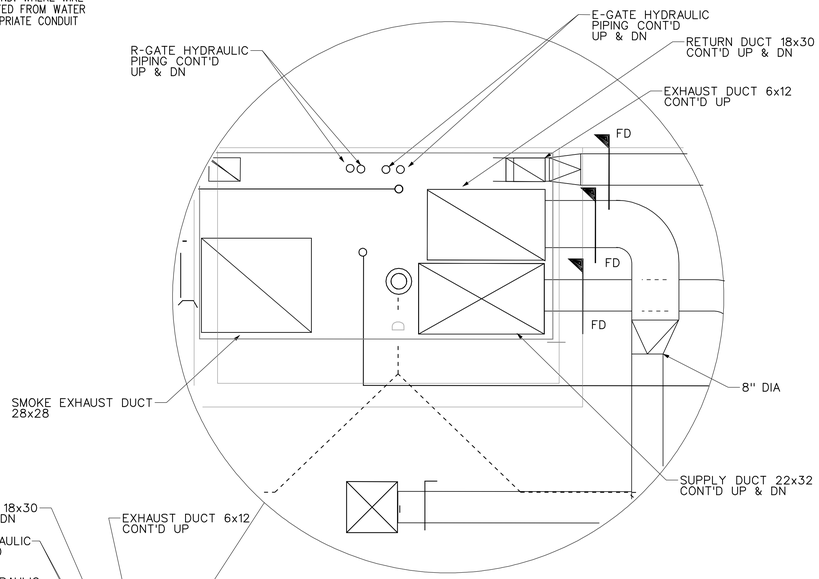

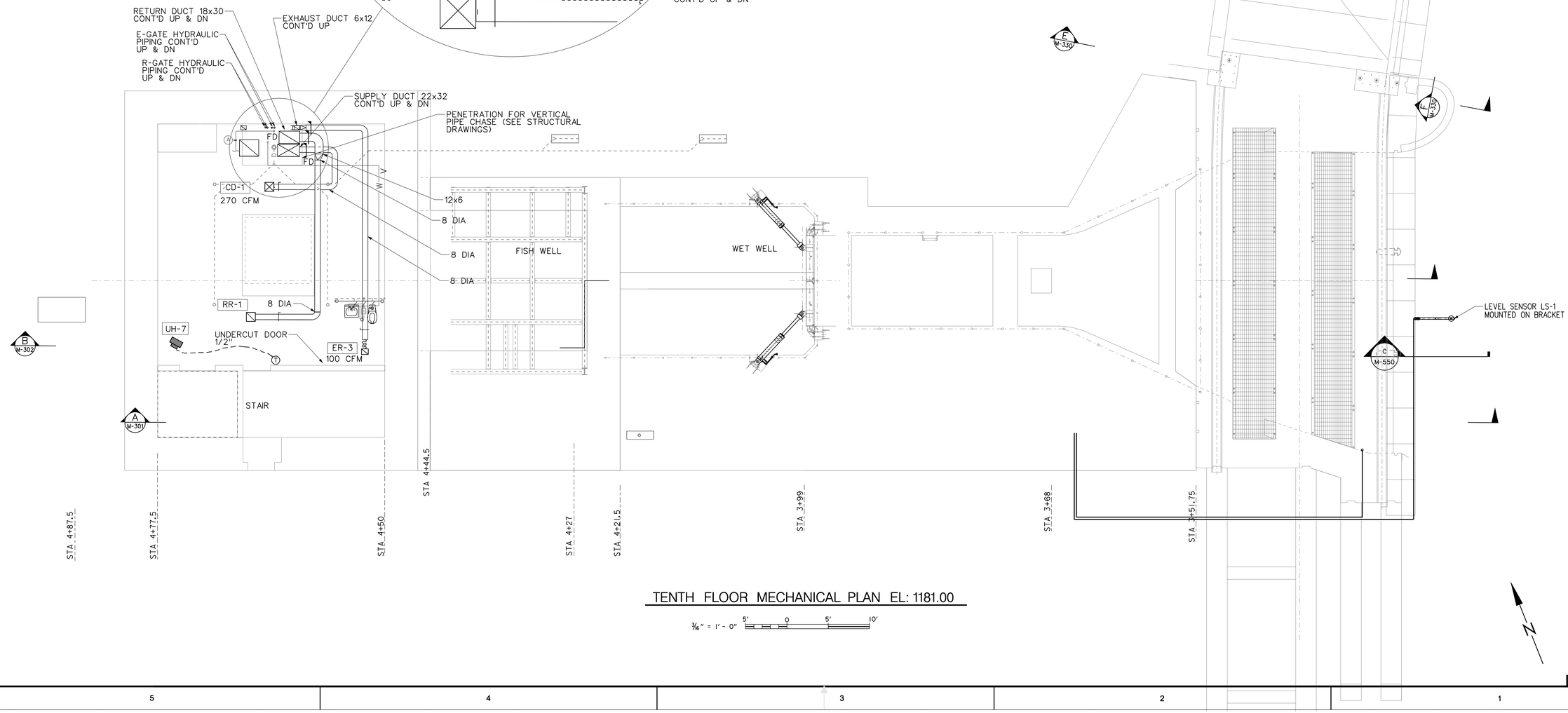

TENTH FLOOR MECHANICAL PLAN EL: 1181.00

3/16" = 1'-0" 5' 0 5' 10'

US Army Corps of Engineers
Seattle District

Symbol	Description	Appr.	Date
			/ /

Designed by: DJB, EC
Drawn by: DJB, EC
Checked by:
Date: 16 MAR 06
File: E-56-14-19
Rev.

U.S. ARMY ENGINEER DISTRICT, SEATTLE
CORPS OF ENGINEERS
SEATTLE, WASHINGTON
Prepared by:

ADDITIONAL WATER STORAGE PROJECT
HOWARD HANSON DAM
MECHANICAL PLAN
EL 1181
GREEN RIVER WASHINGTON

Plate number:
M-109
Sheet of

DATE AND TIME PLOTTED: 07-AUG-2008 11:46
DESIGN FILE: J:\AECDESIGNS\HHAW\Mechanical\HHAWM-109M09.DGN

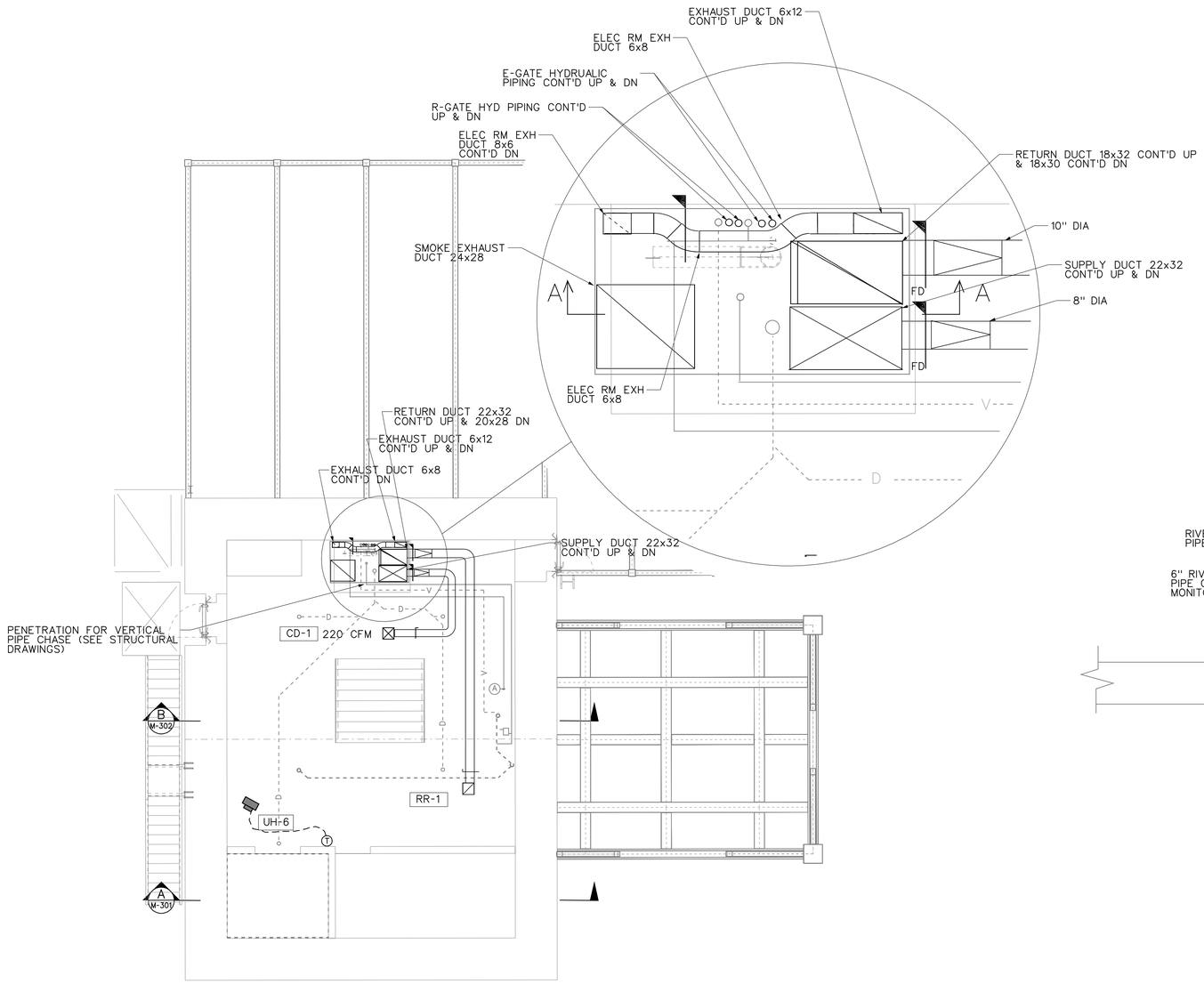

ELEVENTH FLOOR MECHANICAL PLAN EL: 1194.00

3/16" = 1'-0" 5' 0 5' 10'

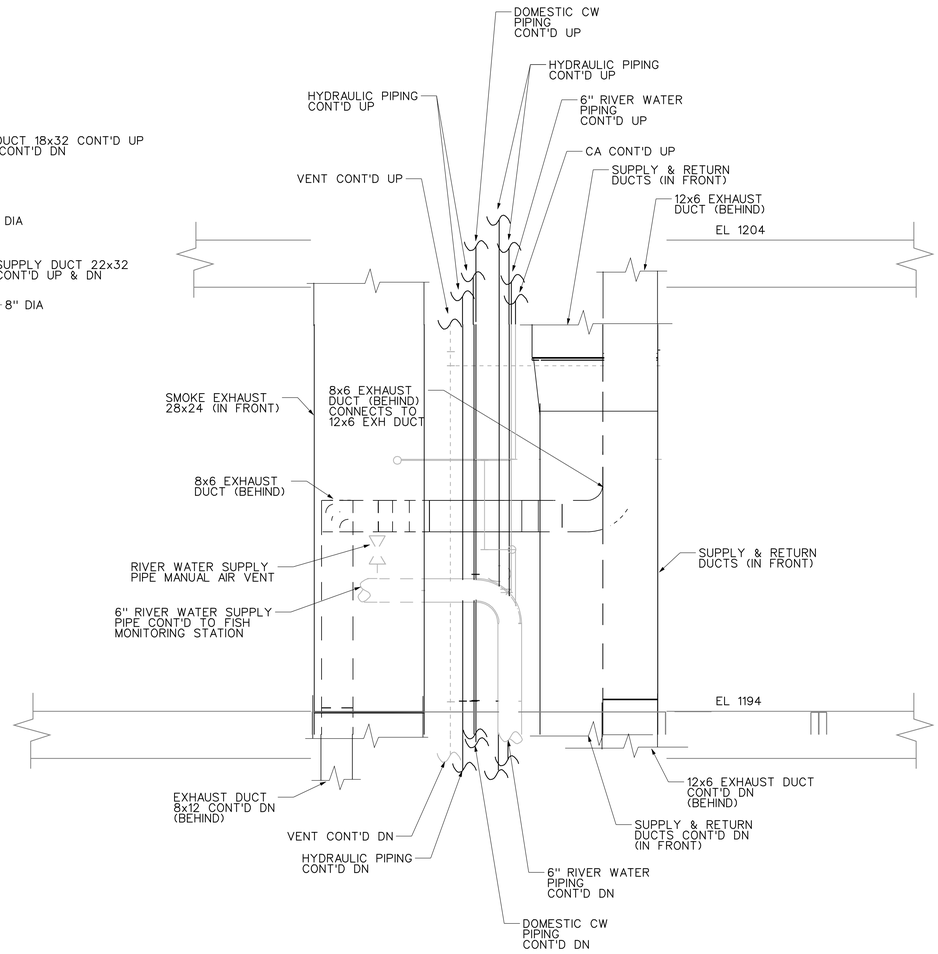

SECTION "A-A"

3/4" = 1'-0" 12" 6" 0 1' 2' 3'

NOTES:

1. FOR PIPE AND OTHER UTILITIES SHOWN IN GREY TONE, REFER TO SHEETS P-101 THRU P-113.

US Army Corps of Engineers
Seattle District

Symbol	Description	Appr.	Date
			/ /

Date: 16 MAR 06
File: E-56-14-19
Rev.

Designed by: DJB
Drawn by: DJB
Checked by:

U.S.ARMY ENGINEER DISTRICT,SEATTLE
CORPS OF ENGINEERS
SEATTLE, WASHINGTON
Prepared by:

ADDITIONAL WATER STORAGE PROJECT
HOWARD HANSON DAM
GREEN RIVER WASHINGTON

MECHANICAL PLAN
EL 1194

Plate number:
M-110
Sheet of

DATE AND TIME PLOTTED: 07-AUG-2008 11:46
DESIGN FILE: J:\AECDESIGNS\HHAW\Mechanical\HHAWM-110M10.DGN

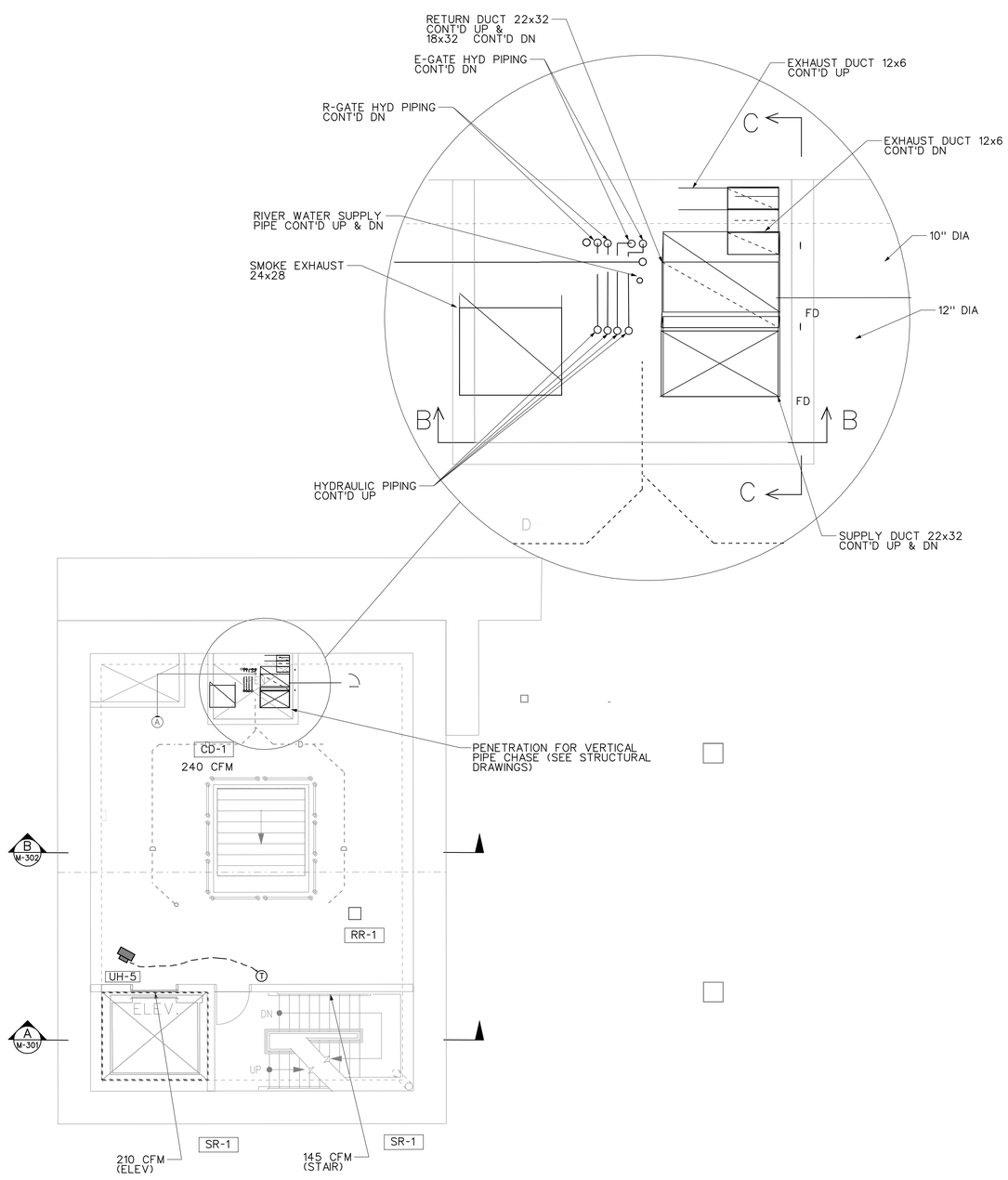

TWELTH FLOOR MECHANICAL PLAN EL: 1204.00

3/16" = 1' - 0" 5' 0 5' 10'

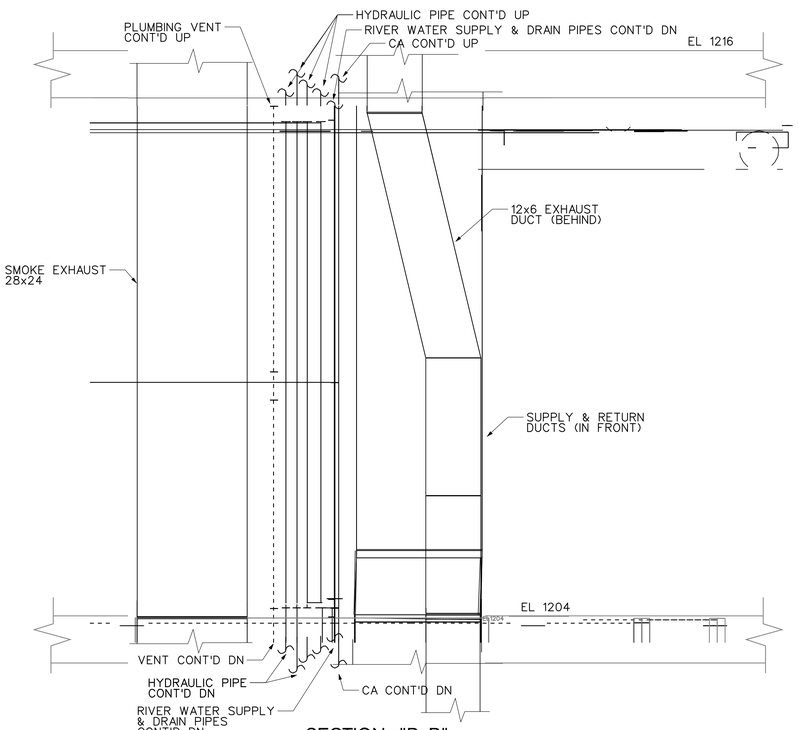

SECTION "B–B"

3/4" = 1' - 0" 12" 6" 0 1' 2' 3'

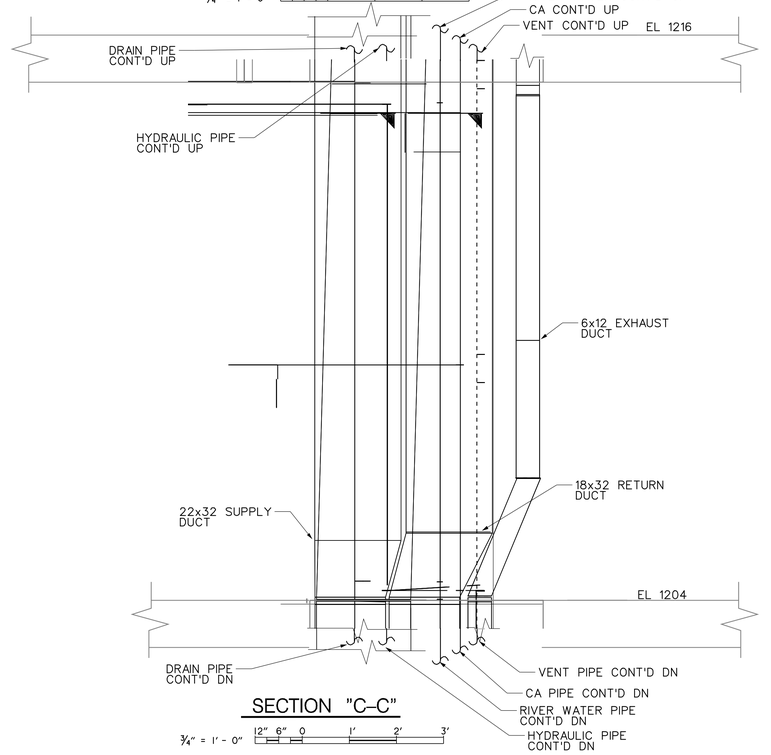

SECTION "C–C"

3/4" = 1' - 0" 12" 6" 0 1' 2' 3'

NOTES:

1. FOR PIPE AND OTHER UTILITIES SHOWN IN GREY TONE, REFER TO SHEETS P-101 THRU P-113.

US Army Corps of Engineers
Seattle District

Symbol	Description	Appr.	Date
			/ /

Designed by: DJB
Drawn by: DJB
Checked by:
Date: 16 MAR 06
File • E-56-14-19
Rev.

U.S.ARMY ENGINEER DISTRICT,SEATTLE
CORPS OF ENGINEERS
SEATTLE, WASHINGTON
Prepared by:

ADDITIONAL WATER STORAGE PROJECT
HOWARD HANSON DAM
GREEN RIVER WASHINGTON

MECHANICAL PLAN
EL 1204

Plate number:
M-111
Sheet of

DESIGN FILE: I:\AECDESIGNS\HHAW\Mechanical\HHAWM-111M11.DGN
DATE AND TIME PLOTTED: 07-AUG-2008 11:47



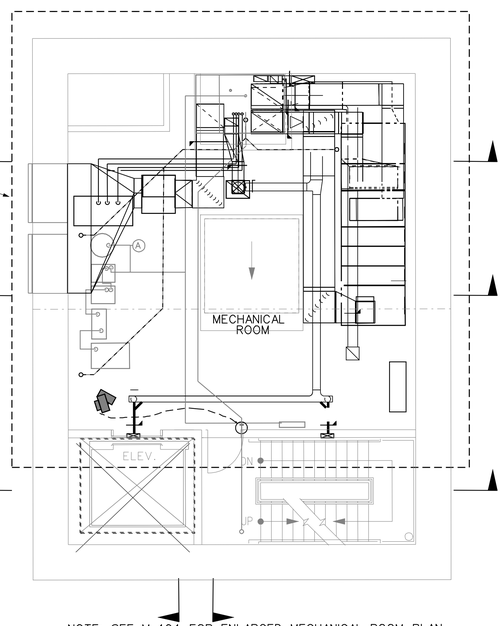

NOTE: SEE M-404 FOR ENLARGED MECHANICAL ROOM PLAN.

NOTE: SEE M-404 FOR ENLARGED MECHANICAL ROOM PLAN.

THIRTEENTH FLOOR MECHANICAL PLAN EL: 1216

3/16" = 1'-0" 5' 0 5' 10'

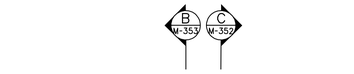

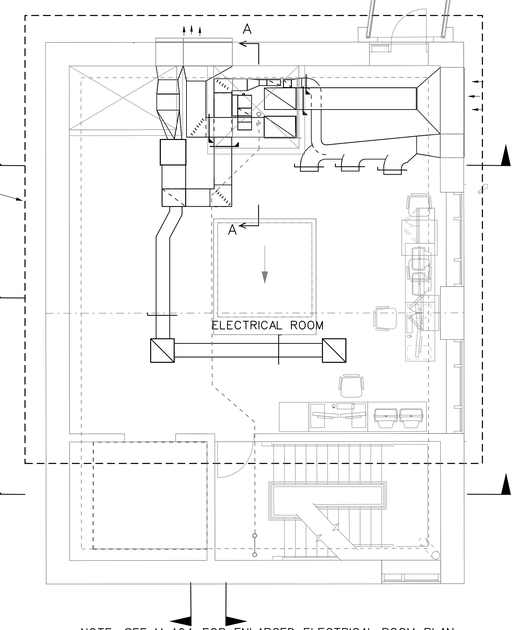

NOTE: SEE M-404 FOR ENLARGED ELECTRICAL ROOM PLAN.

NOTE: SEE M-404 FOR ENLARGED ELECTRICAL ROOM PLAN.

FOURTEENTH FLOOR MECHANICAL PLAN EL: 1228

3/16" = 1'-0" 5' 0 5' 10'

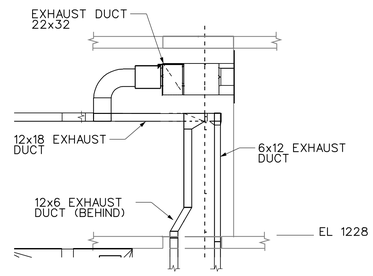

SECTION "A-A"

3/16" = 1'-0" 5' 0 5' 10'

NOTES:

1. FOR PIPE AND OTHER UTILITIES SHOWN IN GREY TONE, REFER TO SHEETS P-101 THRU P-113.

N

US Army Corps of Engineers
Seattle District

Symbol	Description	Date	Appr.	Symbol	Description
		/ /			

Designed by: DJB
Drawn by: DJB
Checked by:
Date: 16 MAR 06
File: E-56-14-19
Rev.

U.S.ARMY ENGINEER DISTRICT,SEATTLE
CORPS OF ENGINEERS
SEATTLE, WASHINGTON
Prepared by:

ADDITIONAL WATER STORAGE PROJECT
HOWARD HANSON DAM
MECHANICAL PLAN EL 1216, 1228
GREEN RIVER WASHINGTON

Plate number:
M-112
Sheet of

DESIGN FILE: J:\AECDESIGNS\HHAW\Mechanical\HHAWM-112M12.DGN
DATE AND TIME PLOTTED: 07-AUG-2008 11:47

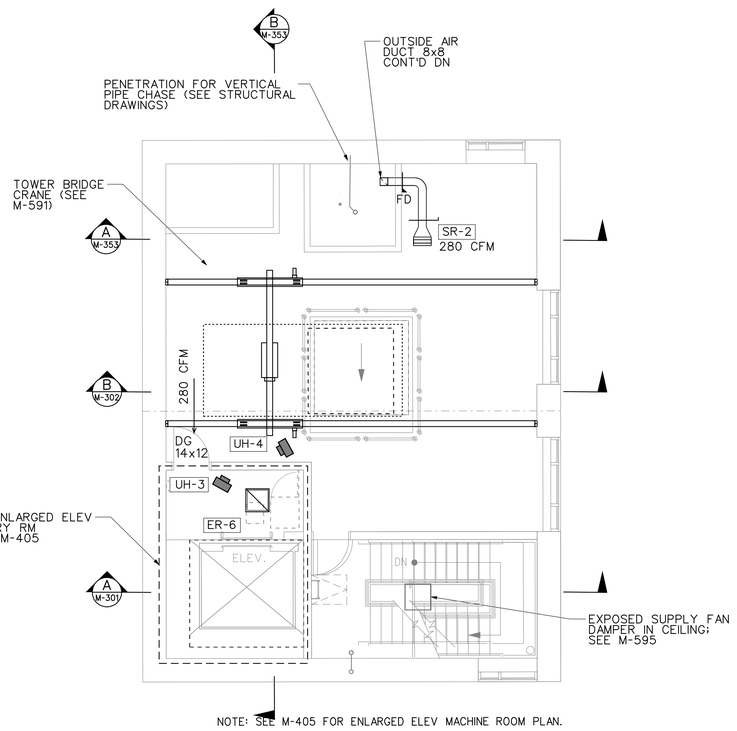

NOTE: SEE M-405 FOR ENLARGED ELEV MACHINE ROOM PLAN.

FIFTEENTH FLOOR MECHANICAL PLAN EL: 1245

3/16" = 1'-0" 5' 0 5' 10'

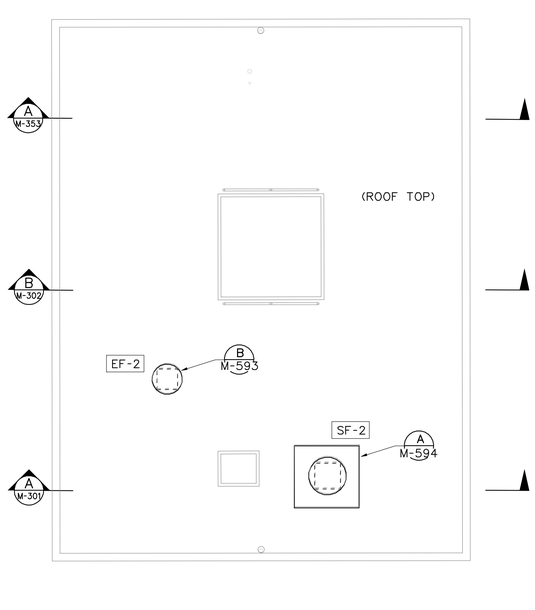

ROOF MECHANICAL PLAN EL: 1257

3/16" = 1'-0" 5' 0 5' 10'

NOTES:

1. FOR PIPE AND OTHER UTILITIES SHOWN IN GREY TONE, REFER TO SHEETS P-101 THRU P-113.

US Army Corps of Engineers
Seattle District

Symbol	Description	Date	Appr.	Symbol	Description
		/ /			

Date: 16 MAR 06
File • E-56-14-19
Designed by: DJB
Drawn by: DJB
Checked by:
Rev.

U.S.ARMY ENGINEER DISTRICT,SEATTLE
CORPS OF ENGINEERS
SEATTLE, WASHINGTON
Prepared by:

ADDITIONAL WATER STORAGE PROJECT
HOWARD HANSON DAM
GREEN RIVER WASHINGTON

MECHANICAL PLAN EL 1245, 1257

Plate number: M-113
Sheet of

DESIGN FILE: I:\AECDESIGNS\HHAW\Mechanical\HHAWM-113M13.DGN
DATE AND TIME PLOTTED: 07-AUG-2008 11:48

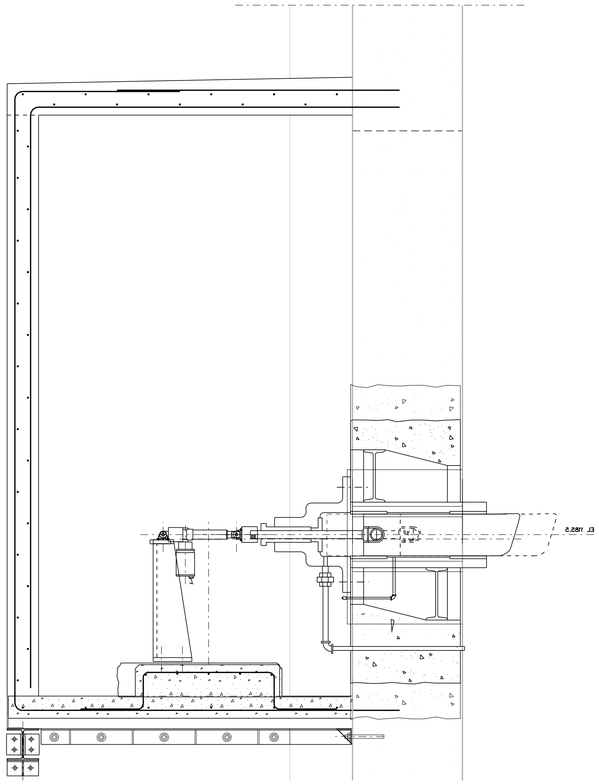

B ENLARGED DOGGING ROOM ELEVATION

Scale: 1/4"=1'-0"

1/4" = 1'-0" 5' 0 5'

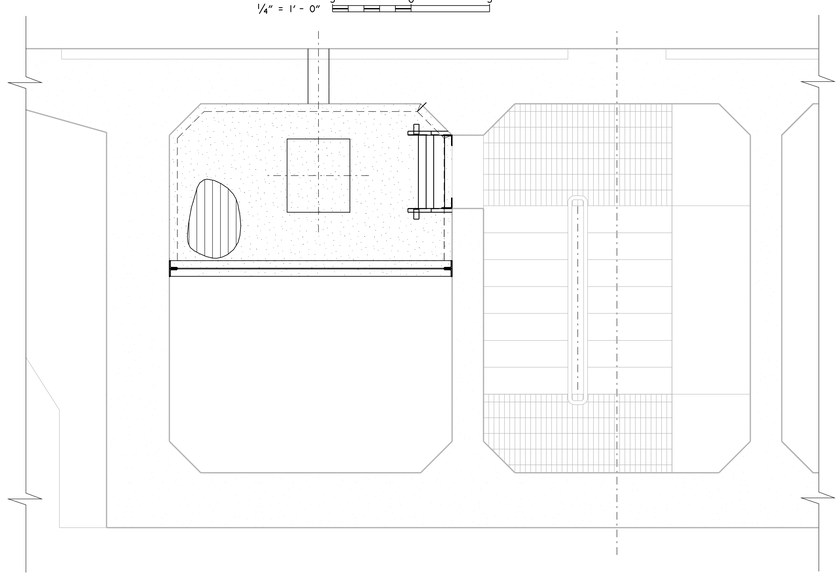

ENLARGED DOGGING ROOM ELEVATION

Scale: 1/4"=1'-0"

1/4" = 1'-0" 5' 0 5'

US Army Corps of Engineers
Seattle District

Symbol	Description	Date	Appr.	Symbol	Description
		/ /			

Date: 16 MAR 06
File: E-56-14-19
Rev.

Designed by: DJB
Drawn by: DJB
Checked by:

U.S.ARMY ENGINEER DISTRICT,SEATTLE
CORPS OF ENGINEERS
SEATTLE, WASHINGTON

Prepared by:

ADDITIONAL WATER STORAGE PROJECT
HOWARD HANSON DAM
GREEN RIVER WASHINGTON

DOGGING ROOM
MECH PLAN

Plate number:
M-150
Sheet of

FILE: I:\AECDESIGNS\HHAW\Mechanical\HHAWM-150DOG.DGN
DESIGN FILE: 11148
DATE AND TIME PLOTTED: 07-AUG-2008

MATCH LINE SEE M-302

EL 1140.01'
FLOOR 8

EL 1118.05'
FLOOR 7

EL 1096.09'
FLOOR 6

EL 1074.13'
FLOOR 5

EL 1061.53'
FLOOR 4

EL 1054.00'

EL 1042.00'
FLOOR 2

EL 1029.00'
FLOOR 1

EL 1021.00'
BOTTOM OF EXCAVATION

SUPPLY DUCT
SUPPLY DUCT
CD-2
FD
SUPPLY DUCT
CD-2
FD
SUPPLY DUCT
CD-2
SUPPLY DUCT
RETURN DUCT
RR-1
SR-1
FD
RETURN DUCT
FD FD
FD
CD-2
RR-2
FD FD
SUPPLY DIFFUSER & FIRE DAMPER AT ELEV SHAFT
FD
RETURN DUCT
SUPPLY DUCT
RETURN DUCT
UH-11
FD
SR-1
SUPPLY DUCT
SUPPLY DUCT (UNDER)
RETURN DUCT (ABOVE)
SEE PLANS AT EL 1029
UH-10

ER-8
ER-2
RH-5
FD FD
ER-8
ER-2
RH-4
FD FD
ER-8
RH-2
ER-2
RH-3
ER-8
UH-12
ER-2

A P-308

D P-304

STA 4+94.76
STA 4+87.5
STA 4+44.5
STA 4+21.5

MECH GALLERY PROFILE I

SCALE: 3/16 " = 1'-0"

3/16" = 1' - 0" 5' 0 5' 10'

B M-101 THRU M-113

US Army Corps of Engineers
Seattle District

Symbol	Description	Appr.	Date
			/ /

Designed by: DJB, EC
Drawn by: DJB, EC
Checked by:
Date: 16 MAR 06
File: E-56-14-19
Rev.

U.S.ARMY ENGINEER DISTRICT,SEATTLE
CORPS OF ENGINEERS
SEATTLE, WASHINGTON
Prepared by:

ADDITIONAL WATER STORAGE PROJECT
HOWARD HANSON DAM
MECH GALLERY PROFILE I
GREEN RIVER WASHINGTON

Plate number: M-301
Sheet of

DATE AND TIME PLOTTED: 07-AUG-2008 11:49
DESIGN FILE: J:\AECDESIGNS\HHAW\Mechanical\HHAWM-301elf.DGN

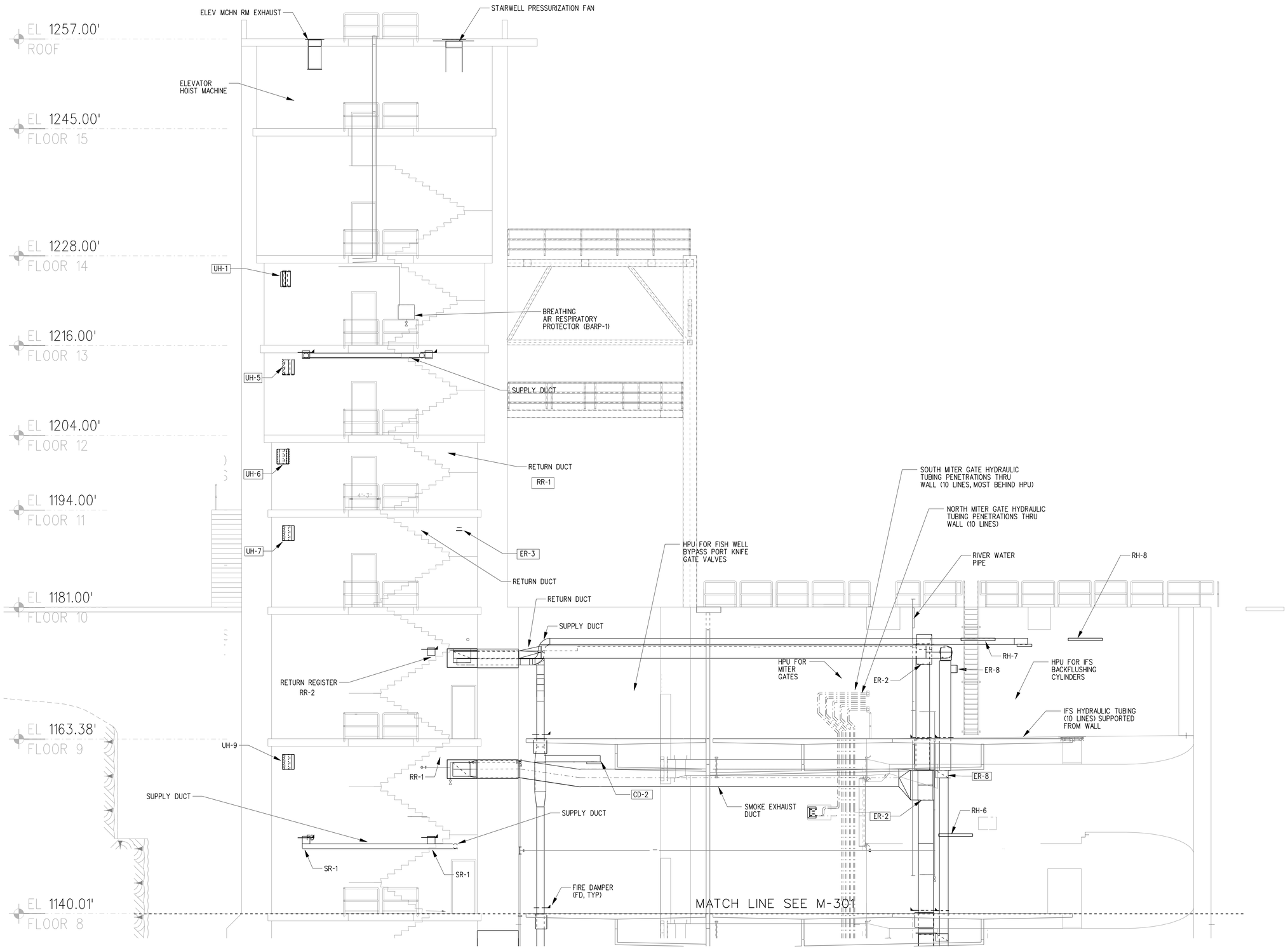

MECH GALLERY PROFILE II

SCALE: 3/16 " = 1'-0"

3/16" = 1'-0" 5' 0 5' 10'

B
M-101
THRU
M-113

US Army Corps of Engineers
Seattle District

Symbol	Description	Appr.	Date
			/ /

Symbol	Description	Appr.	Date

Designed by: DJB EC
Drawn by: DJB EC
Checked by:

Date: 16 MAR 06
File # E-56-14-19
Rev.

U.S.ARMY ENGINEER DISTRICT,SEATTLE
CORPS OF ENGINEERS
SEATTLE, WASHINGTON
Prepared by:

ADDITIONAL WATER STORAGE PROJECT
HOWARD HANSON DAM
MECH GALLERY
PROFILE II
GREEN RIVER WASHINGTON

Plate number:
M-302
Sheet of

DATE AND TIME PLOTTED: 07-AUG-2008 11:49
DESIGN FILE: J:\ACEDESIGNS\HHAW\Mechanical\HHAWM-302el2.DGN

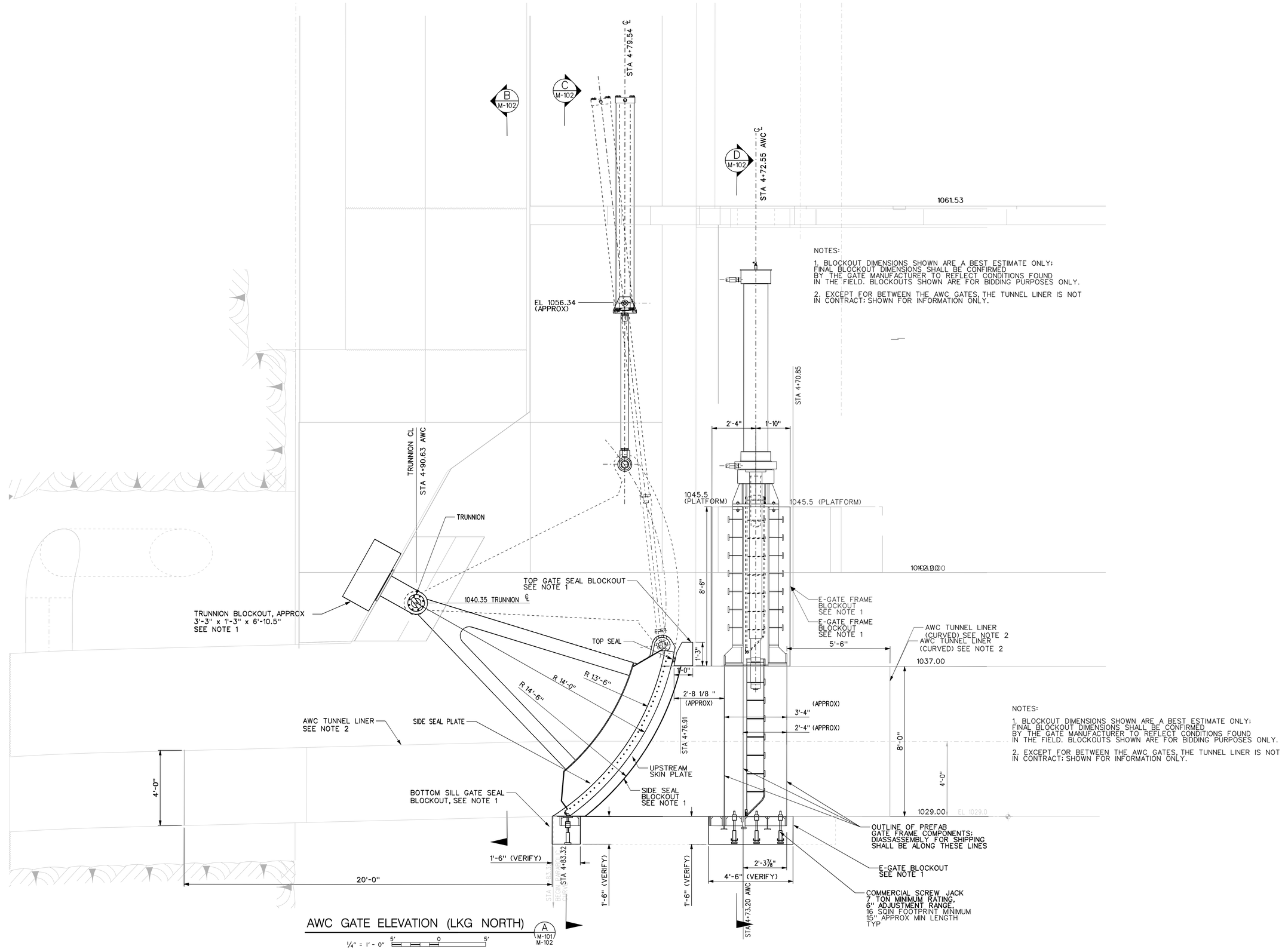

AWC GATE ELEVATION (LKG NORTH)

A M-101 M-102

1/4" = 1' - 0" 5' 0 5'

US Army Corps of Engineers
Seattle District

Symbol	Description	Appr.	Date
			/ /

U.S.ARMY ENGINEER DISTRICT,SEATTLE
CORPS OF ENGINEERS
SEATTLE, WASHINGTON

Designed by: DJB
Drawn by: DJB
Checked by:
Prepared by:

Date: 16 MAR 06
File * E-56-14-19
Rev.

ADDITIONAL WATER STORAGE PROJECT
HOWARD HANSON DAM
GREEN RIVER WASHINGTON

AWC GATE ELEVATION "A-A"

Plate number: M-309
Sheet of

DATE AND TIME PLOTTED: 07-AUG-2008 11:50 DESIGN FILE: I:\AECDESIGNS\HHAW\Mechanical\HHAWM-309xxx.DGN

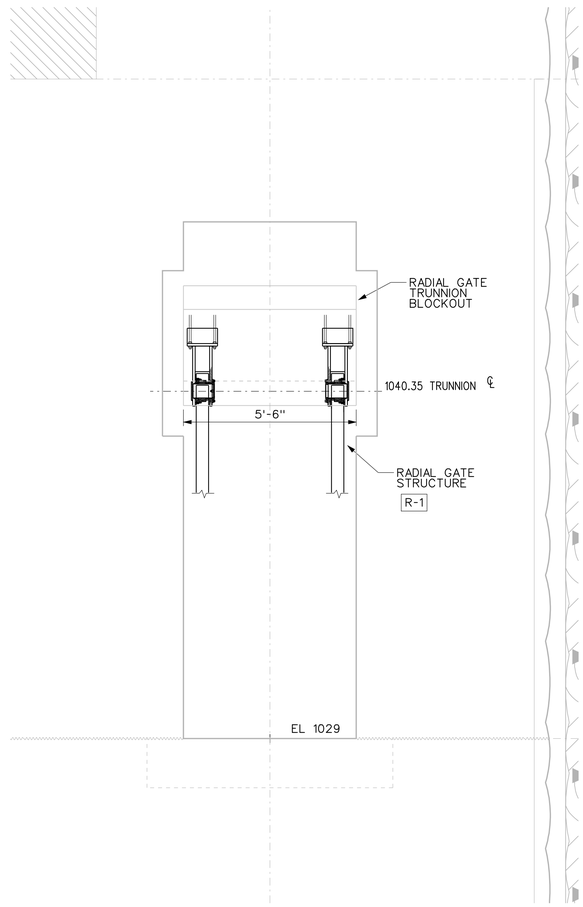

R-GATE SECTION B LKG UPSTREAM (B, M-101/M-102)

1/4" = 1'-0" 5' 0 5'

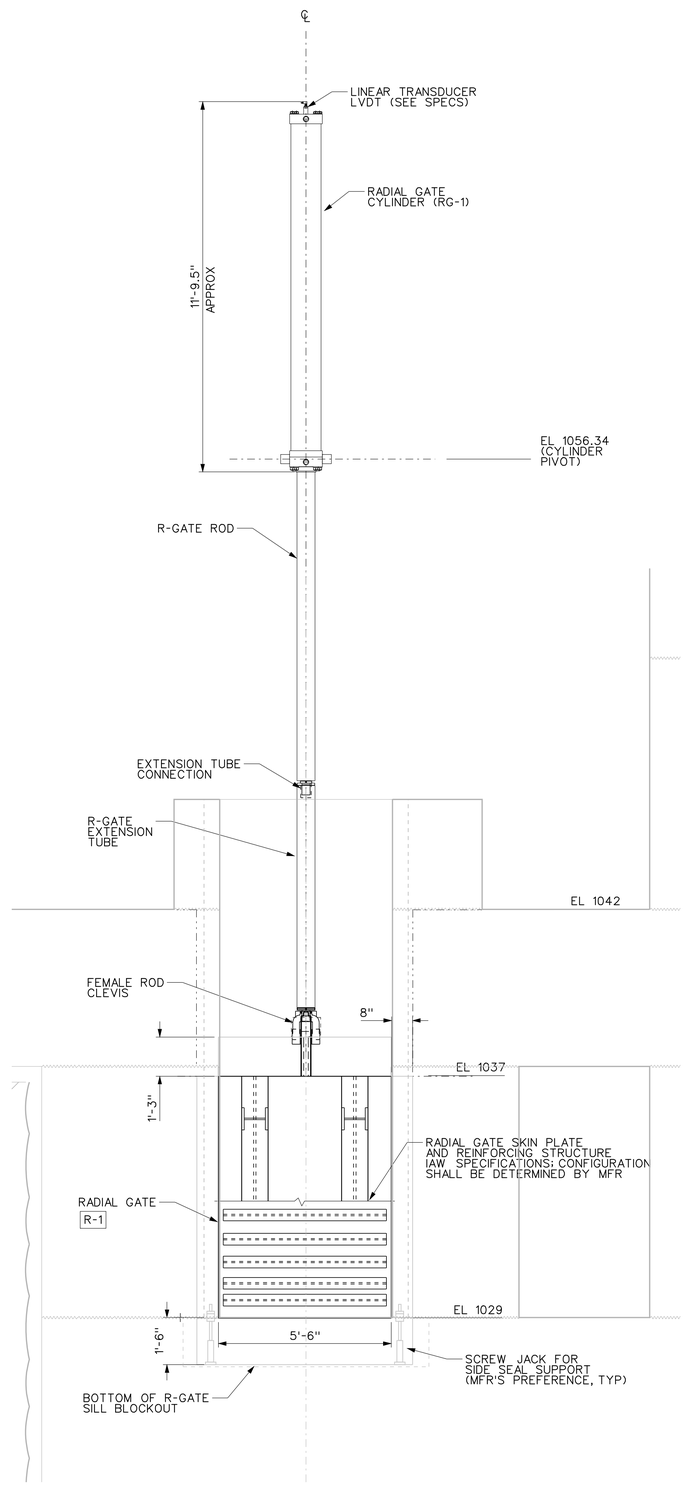

R-GATE SECTION C LKG UPSTREAM (C, M-101/M-102)

1/4" = 1'-0" 5' 0 5'

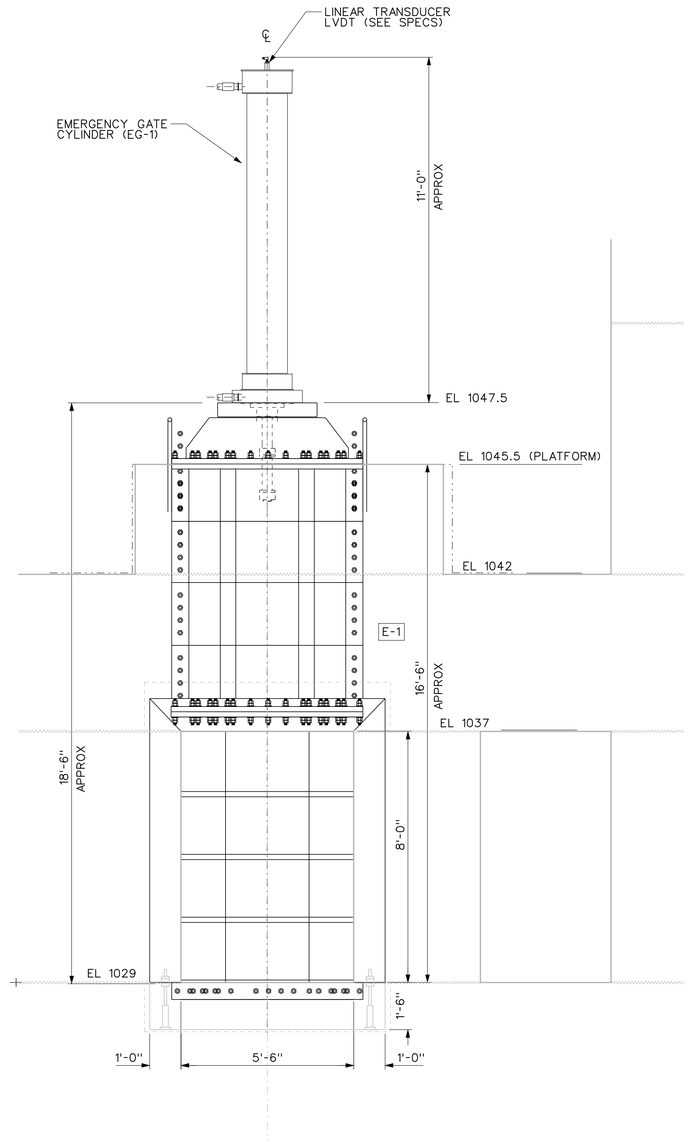

E-GATE SECTION D LKG UPSTREAM (D, M-101/M-102)

1/4" = 1'-0" 5' 0 5'

US Army Corps of Engineers
Seattle District

Symbol	Description	Date	Appr.	Symbol	Description
		/ /			

Designed by: DJB
Drawn by: DJB
Checked by: X
Date: XX YYY ZZ
File: E-XX-X-XX
Rev.

U.S.ARMY ENGINEER DISTRICT,SEATTLE
CORPS OF ENGINEERS
SEATTLE, WASHINGTON
Prepared by:

ADDITIONAL WATER STORAGE PROJECT GATES
HOWARD HANSON DAM
GREEN RIVER WASHINGTON

AWC GATE SECTIONS

Plate number: M-310
Sheet of

DESIGN FILE: I:\AECDESIGNS\HHAW\Mechanical\HHAWM-310elf.DGN
DATE AND TIME PLOTTED: 07-AUG-2008 11:50

MATCHLINE SEE M-312

EL 1140.01'
FLOOR 8

EL 1118.05'
FLOOR 7

EL 1096.09'
FLOOR 6

EL 1074.13'
FLOOR 5

EL 1061.53'
FLOOR 4

EL 1054.00'

EL 1042.00'
FLOOR 2

EL 1029.00'
FLOOR 1

EL 1021.00'
BOTTOM OF EXCAVATION

SUPPLY DUCT-FRONT
RETURN DUCT-BEHIND

HYDRAULIC, RIVER WATER, COMPRESSED AIR, ETC PIPES ROUTED IN PIPE CHASE

CD-1 RR-1

HYDRAULIC PIPE

CD-1 RR-1

RETURN DUCT

RR-1 CD-1

HYDRAULIC PIPE

CD-1 RR-1

RADIAL GATE CYLINDER RG-1

EMERGENCY GATE CYLINDER EG-1

RH-1A RR-1

EMERGENCY GATE E-1

RADIAL GATE R-1

X M-305

D M-310

STA 4+94.76

STA 4+87.5

STA 4+21.5

STA 3+91.5

MECH CENTERLINE PROFILE I

SCALE: 3/16 " = 1'-0"

3/8" = 1'-0" 5' 0 5' 10'

B M-101 THRU M-113

US Army Corps of Engineers
Seattle District

Symbol	Description	Date	Appr.	Symbol	Description
		/ /			

Designed by: DJB, EC
Drawn by: DJB, EC
Checked by:
Prepared by:

Date: 16 MAR 06
File # E-56-14-19
Rev.

U.S.ARMY ENGINEER DISTRICT,SEATTLE
CORPS OF ENGINEERS
SEATTLE, WASHINGTON

ADDITIONAL WATER STORAGE PROJECT
HOWARD HANSON DAM
GREEN RIVER WASHINGTON

MECH CENTERLINE
PROFILE I

Plate number:
M-311
Sheet of

DESIGN FILE: I:\ACCDESIGNS\HHAW\Mechanical\HHAWM-313xxx.DGN

DATE AND TIME PLOTTED: 07-AUG-2008 11:51

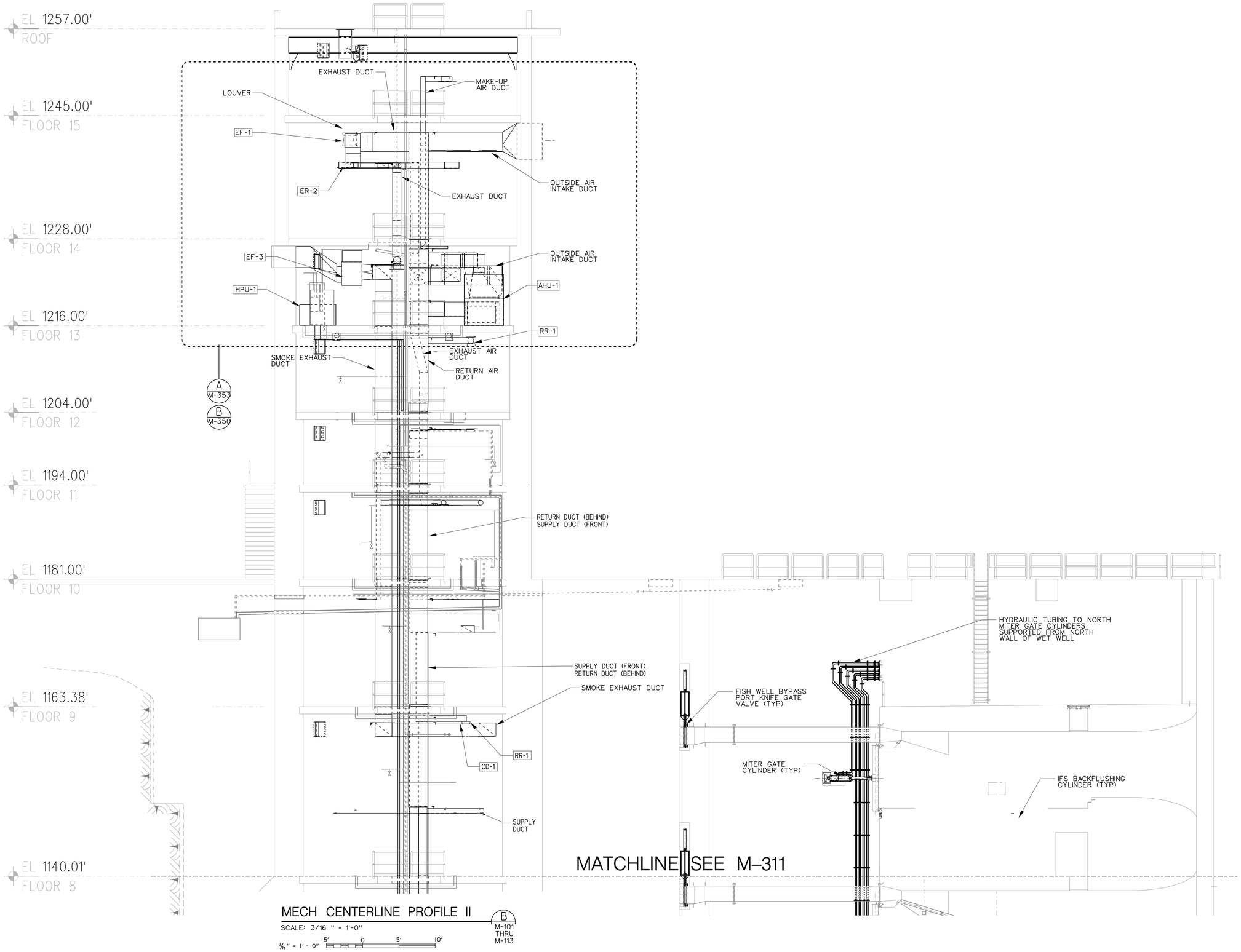

MECH CENTERLINE PROFILE II

SCALE: 3/16 " = 1'-0"

3/8" = 1'-0" 5' 0 5' 10'

B M-101 THRU M-113

US Army Corps of Engineers
Seattle District

Symbol	Description	Date	Appr.	Symbol	Description
		/ /			

Designed by: DJB, EC
Drawn by: DJB, EC
Checked by:
Prepared by:

U.S.ARMY ENGINEER DISTRICT,SEATTLE
CORPS OF ENGINEERS
SEATTLE, WASHINGTON

Date: 16 MAR 06
File: E-56-14-19
Rev.

ADDITIONAL WATER STORAGE PROJECT
HOWARD HANSON DAM
GREEN RIVER WASHINGTON

MECH CENTERLINE PROFILE II

Plate number: M-312
Sheet of

FILE: I:\AECDESIGNS\HHAWM\Mechanical\HHAWM-314xxx.DGN
DESIGN FILE: JN 11:51
DATE AND TIME PLOTTED: 07-AUG-2008

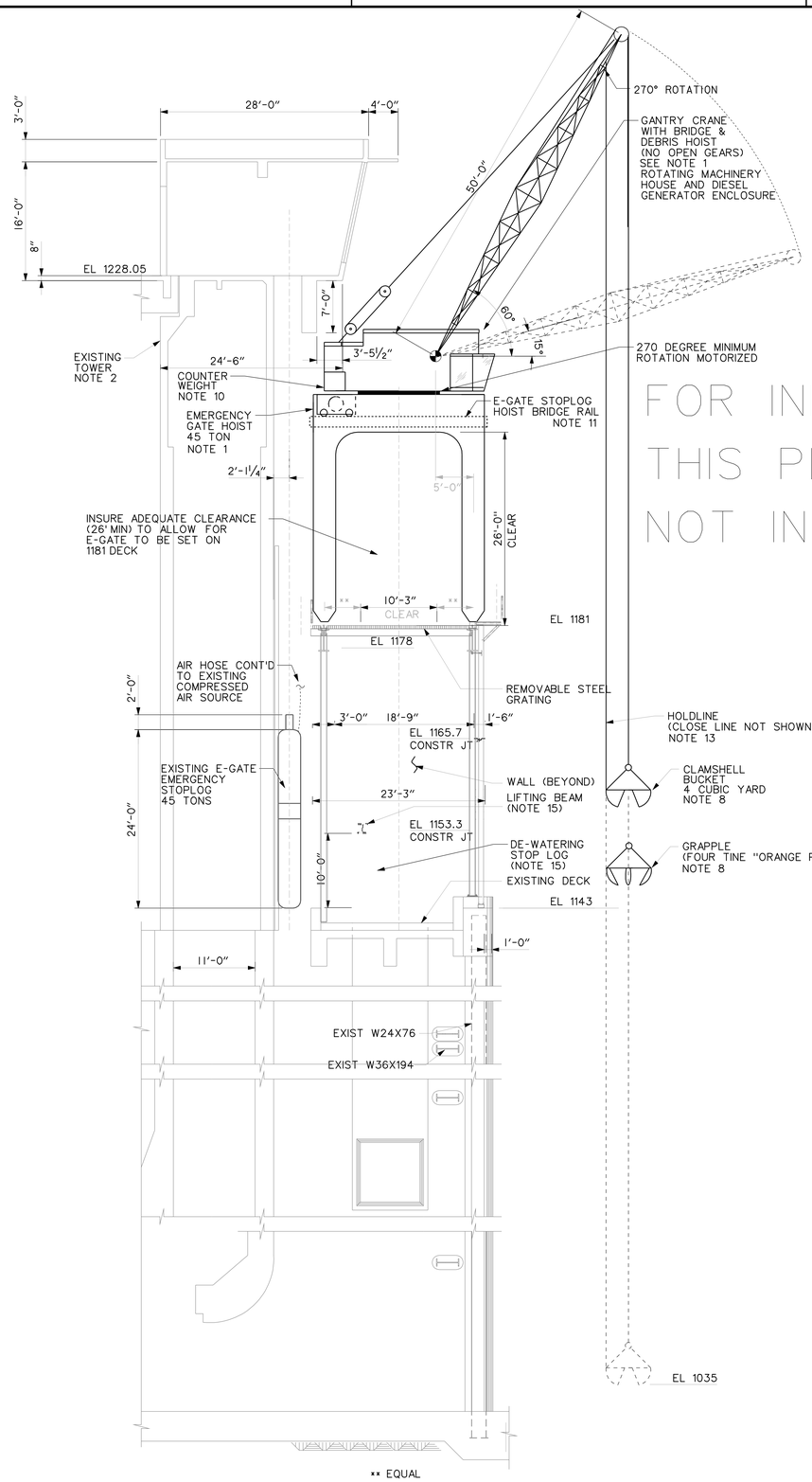

SECTION

SCALE: 1/8" = 1'-0"

E M-103 THRU M-113

NOTE: THIS SHEET FOR INFORMATION ONLY (GANTRY CRANE NIC)

FOR INFORMATION ONLY; THIS PLATE NOT IN CONTRACT

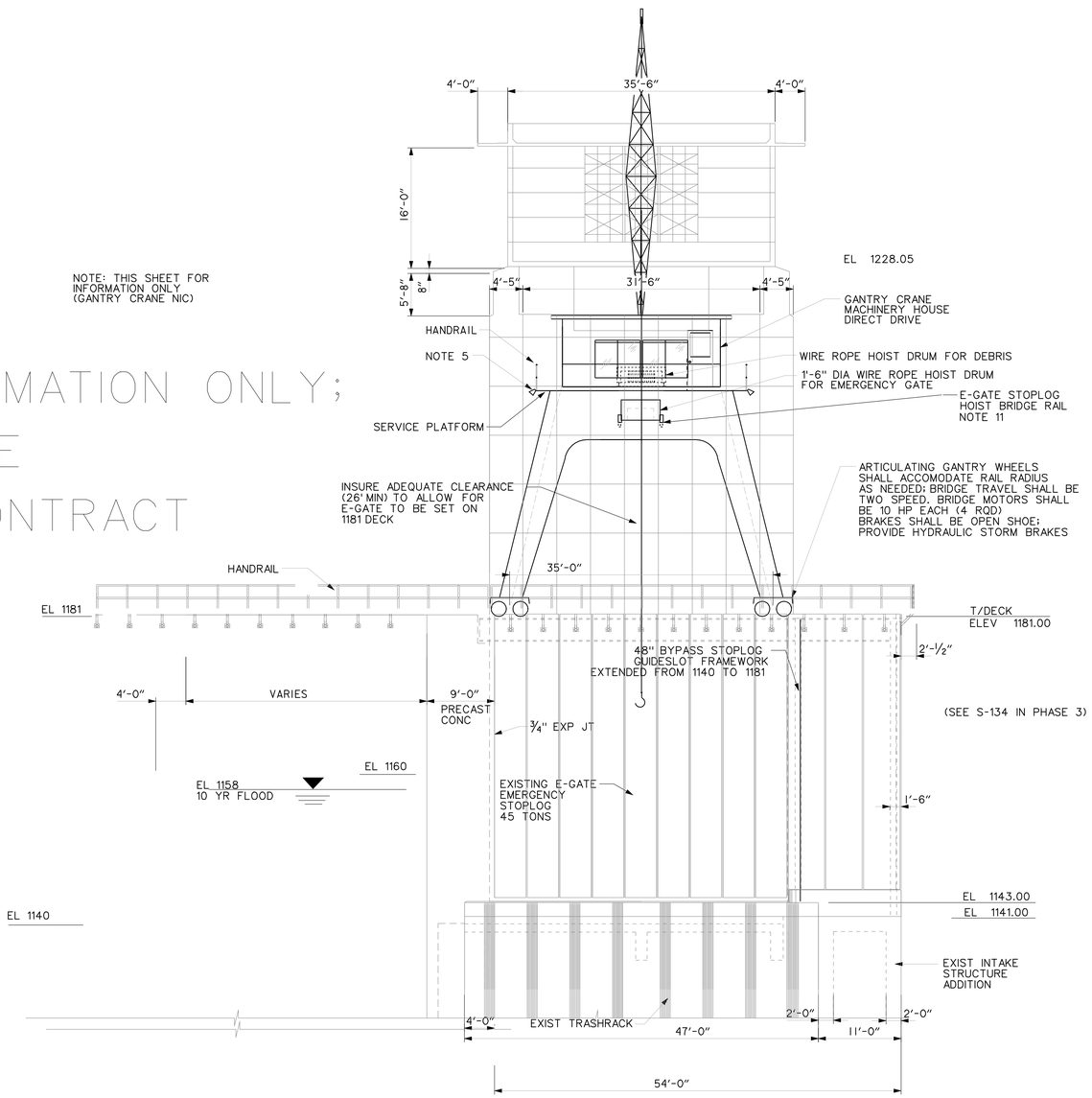

SOUTH ELEVATION (UPSTREAM)

SCALE: 1/8" = 1'-0"

F M-103 THRU M-113

NOTES:

1. DEBRIS HOIST MOTOR SHALL BE CAPABLE OF A 300 FPM LINE SPEED (APPROX 260 HP). DEBRIS HOIST SHALL BE VARIABLE SPEED (MAX 300 FPM, MIN PER MFR RECOMMENDATION).

   E-GATE STOPLOG MOTOR SHALL BE TWO SPEED, 16/4 FPM (APPROX 40 HP) DEBRIS HOIST TRAVEL SHALL BE 162'; E-GATE HOIST TRAVEL SHALL BE 42 FEET. MOTORS SHALL BE HYDRAULIC.

2. MFR SHALL PROVIDE TRAVEL LIMIT SWITCHES TO PREVENT CONTACT WITH EXISTING INTAKE TOWER UNDER ALL CIRCUMSTANCES. TOWER ROTATION MAY BE SUBJECT TO FIELD VERIFICATION; UNDER NO CIRCUMSTANCES SHALL THE GANTRY ROTATION INTERFERE WITH THE EXISTING FLOOD REGULATING TOWER.

3. ALL HYDRAULIC SYSTEMS SHALL USE BIO-DEGRADABLE FLUID. SEE GANTRY SPEC.

NOTES CONT'D:

4. CRANE SHALL BE PROVIDED WITH "BELLY BOX" TYPE RADIO REMOTE CONTROL CAPABILITY.

5. PROVIDE 110V 4 DUPLEX RECEPTACLES AND FOUR 400W FLOODLIGHTS ON CRANE.

6. ALL MOTORS AND PANELS SHALL HAVE ANTI-CONDENSATION HEATERS.

7. ALL HOISTS SHALL FEATURE UPPER/LOWER LIMIT SWITCHES, OVERLOAD LIMIT, AND TRUE VERTICAL LIFT.

8. PROVIDE BOTH CLAMSHELL BUCKET AND GRAPPLE; SEE SPEC.

9. ELECTRICAL ENCLOSURES SHALL BE NEMA 4. MOTOR CONTROLS SHALL BE 480V BUS BAR HARD WIRED.

10. COUNTERWEIGHT SIZE AND CONFIGURATION SHALL BE DETERMINED BY CRANE MFR; MASS AND POSITION OF ENGINE GENERATOR MAY BE USED TO OFFSET OR REDUCE COUNTERWEIGHT SIZE.

11. E-GATE BRIDGE TRAVEL SHALL BE 12' MINIMUM; TROLLEY, FESTOON, ETC SHALL BE DETERMINED BY MFR.

12. GANTRY BOOM LOAD SHALL BE LIMITED USING A LOAD MOMENT INDICATOR; MAXIMUM BOOM LOAD SHALL BE 15,000 LBS AT 50 FEET. AT 25 FEET BOOM LENGTH, MAXIMUM BOOM LOAD SHALL BE 30,000 LBS. THE HOISTS SHALL BE EQUIPPED WITH FRICTION BRAKES CAPABLE OF RELEASING AN EXCESSIVE LOAD AS DETERMINED BY A LOAD MOMENT INDICATOR (LMI).

13. GRAPPLE ROPE SHALL BE NON ROTATING, SIZE IN ACCORDANCE WITH MFR'S RECOMMENDATION.

14. DIESEL FUEL TANK SHALL FEATURE SPILL AND OVERFILL PROTECTION, AND LOCAL AND REMOTE LEVEL INDICATION.

15. HEAVIEST DEWATERING STOPLOG (NIC) WEIGHS APPROX 57,800 LBS. LIFTING BEAM (NIC) WEIGHS APPROX 4850 LBS. ASSUME A 25% ALLOWANCE FOR STATIC FRICTION DUE TO SILT. TOTAL DE-WATERING HOIST CAPACITY SHALL BE 80,000 LBS - 40 TONS.

US Army Corps of Engineers
Seattle District

Symbol	Description	Date
Appr.		/ /

Designed by: DJB
Drawn by: DJB
Checked by:
Date: 16 MAR 06
File: E-56-14-19
Rev.

U.S.ARMY ENGINEER DISTRICT, SEATTLE
CORPS OF ENGINEERS
SEATTLE, WASHINGTON
Prepared by:

ADDITIONAL WATER STORAGE PROJECT
HOWARD HANSON DAM
GREEN RIVER WASHINGTON

GANTRY CRANE ELEVATIONS

Plate number: M-330
Sheet of

DATE AND TIME PLOTTED: 07-AUG-2008 11:52
DESIGN FILE: I:\AECDESIGNS\HHAW\Mechanical\HHAWM-332el9.DGN

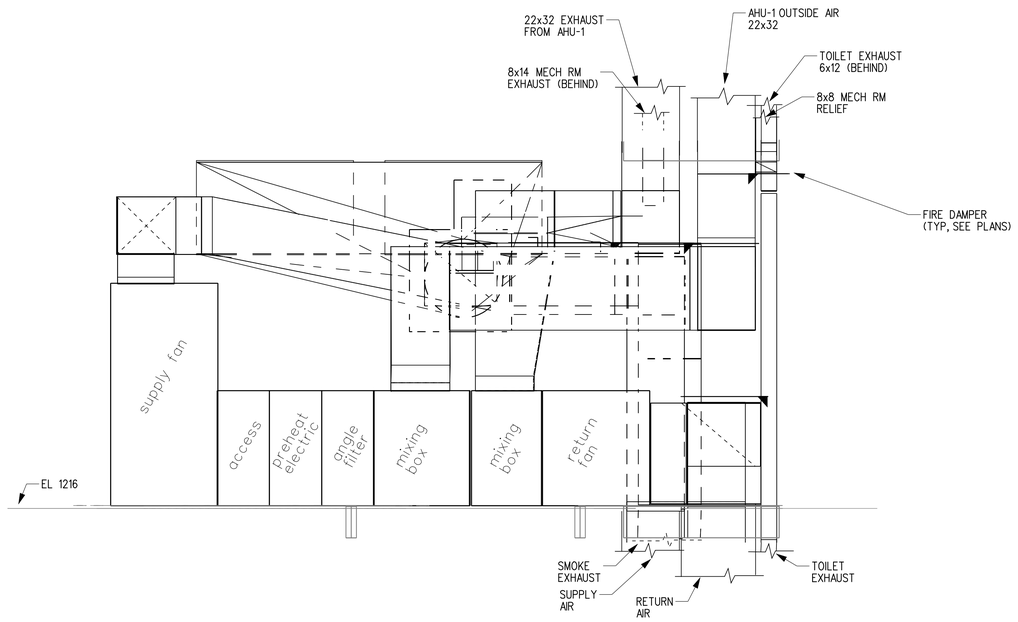

MECH RM ELEV

A M-404

½" = 1' - 0"

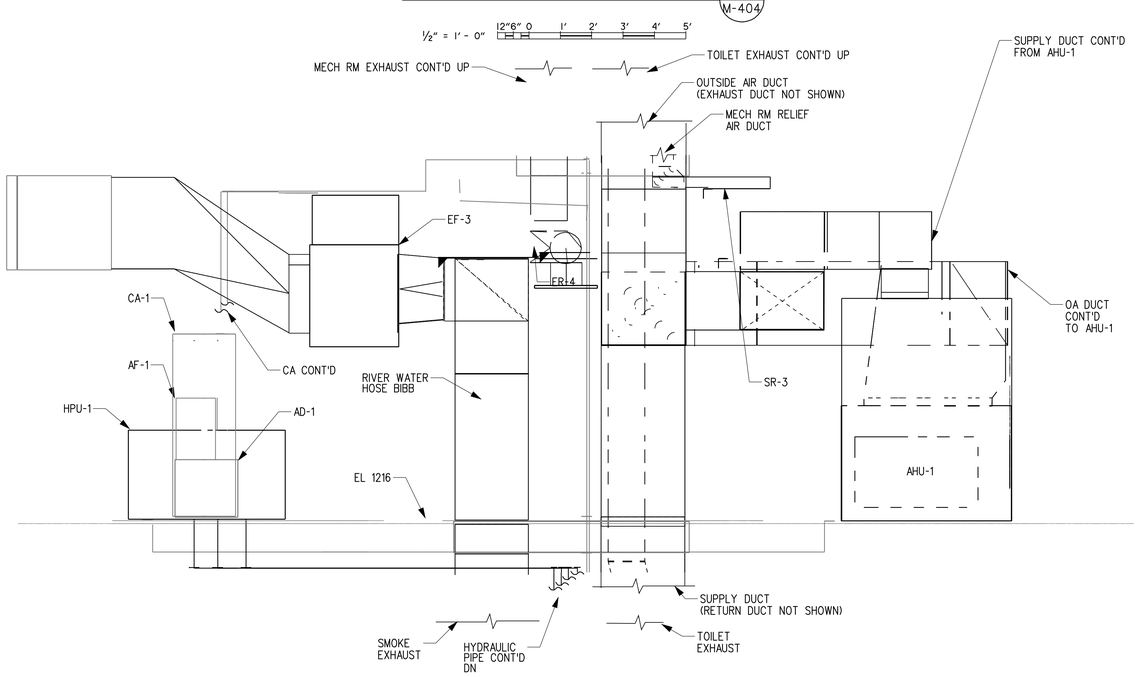

MECH RM SECTION

B M-404

½" = 1' - 0"

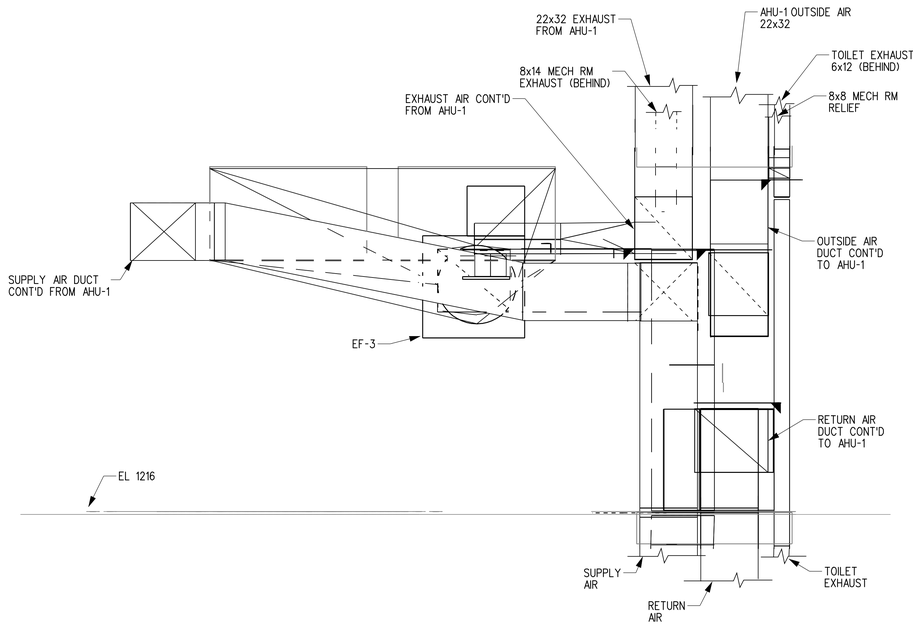

MECH RM SECTION

C M-404

½" = 1' - 0"

US Army Corps of Engineers
Seattle District

Symbol	Description	Date	Appr.	Symbol	Description
		/ /			

Designed by: DJB
Drawn by: DJB
Checked by:
Date: 16 MAR 06
File: E-56-14-19
Rev.

U.S.ARMY ENGINEER DISTRICT, SEATTLE
CORPS OF ENGINEERS
SEATTLE, WASHINGTON
Prepared by:

ADDITIONAL WATER STORAGE PROJECT
HOWARD HANSON DAM
WASHINGTON

MECHANICAL RM SECTIONS

GREEN RIVER

Plate number:
M-350
Sheet of

DATE AND TIME PLOTTED: 07-AUG-2008 11:53
DESIGN FILE: I:\AECDESIGNS\HHAW\Mechanical\HHAWM-353SEC.DGN

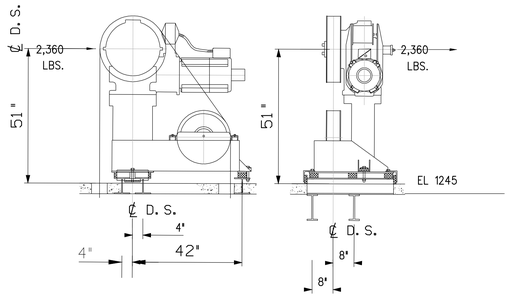

GD-1 MACHINE WITH DEFLECTOR ON BEDPLATE,
HORIZONTAL SEISMIC FORCE APPLIED TO THE MACHINE
ROOM SLAB IN ANY DIRECTION. (ZONE 3 OR GREATER)

NOTE: ALL DIMENTIONS SUBJECT TO MANUFACTURER AND FIELD VERIFICATION

ELEVATOR MACHINE DETAIL

½" = 1' - 0" 12"6" 0 1' 2' 3' 4' 5'

Floor Number	Floor	Floor Height*
15	1245.00	11.00
14	1228.00	16.00
13	1216.00	11.00
12	1204.00	11.00
11	1194.00	9.00
10	1181.00	12.00
9	1163.38	16
8	1140.01	22
7	1118.05	21
6	1096.09	21
5	1074.13	21
4	1061.53	12
	1051	
2	1042.00	18.5
(pit)	1036.50	5.5

(no stop) Tower Crane/Elev Machine Room: no stop
Stop 1 = Elecl/Ctl Room/Main entrance
Stop 2 = Mechanical Room
Stop 3 = undesignated
Stop 4 = Fish Monitoring
Stop 5 = Alternate entrance (Lobby)
Stop 6 = Gallery & Fish Collector 5 access
Stop 7 = Gallery & Fish Collector 4 access
Stop 8 = Gallery & Fish Collector 3 access
Stop 9 = Gallery & Fish Collector 2 access
Stop 10 = Gallery & Fish Collector 1 access
Stop 11 = r-gate & gallery cylinder access
(no stop)
Stop 12 = Valve Room, Fish Well access
pit (bottom floor: no stop)

*NOTE: FLOOR HEIGHTS ASSUME SLAB THICKNESS OF 12". SEE STRUCTURAL DRAWINGS.

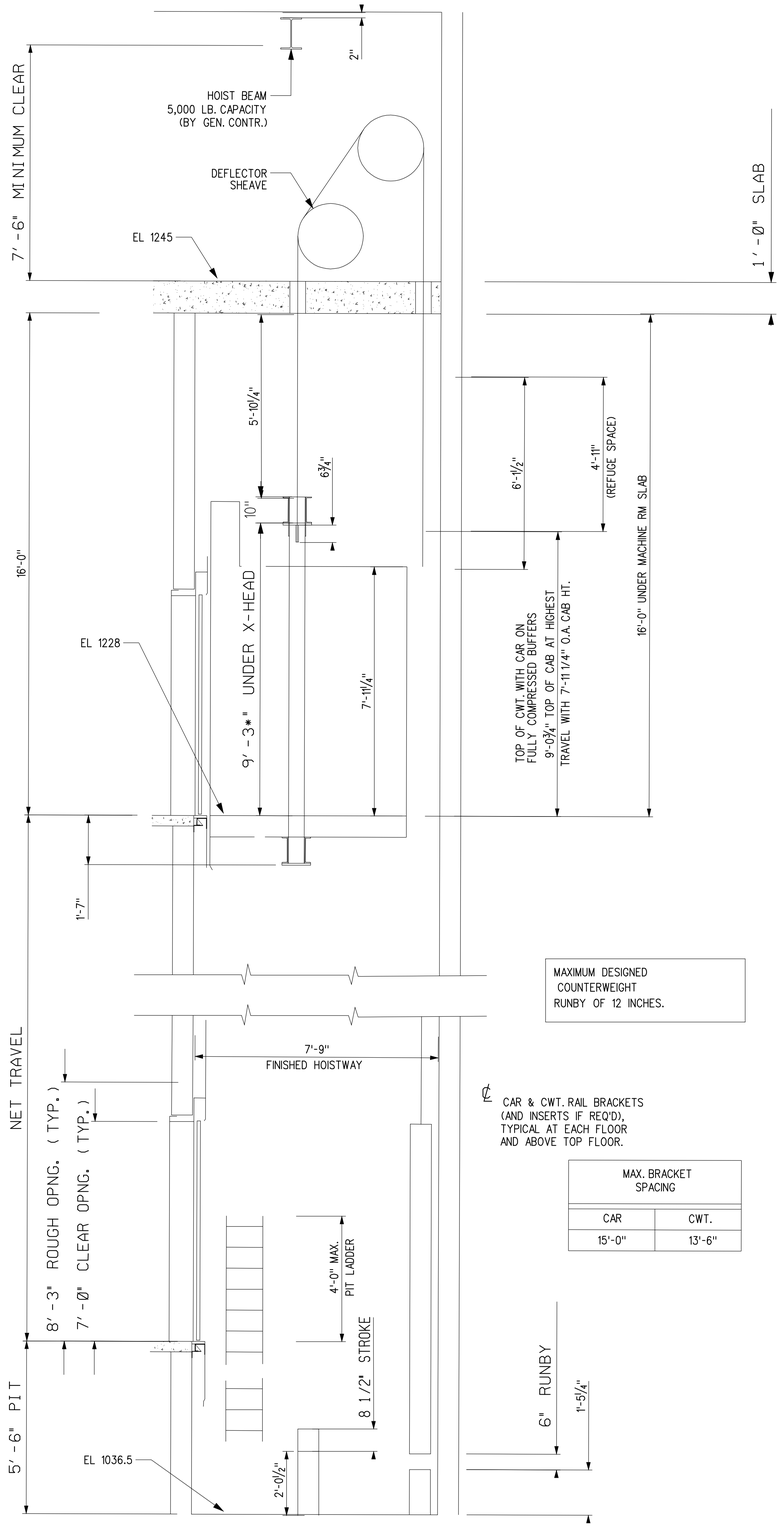

NOTES: 1. CONTINUOUS PIT CHANNELS WITH 1" GROUT
2. ALL DIMENTIONS SUBJECT TO MANUFACTURER AND FIELD VERIFICATION

ELEVATOR HOISTWAY SECTION

A M-405

½" = 1' - 0" 12"6" 0 1' 2' 3' 4' 5'

US Army Corps of Engineers
Seattle District

Symbol	Description	Date	Appr.	Symbol	Description
		/ /			

Designed by: DJB
Drawn by: DJB
Checked by:
Prepared by:
Date: 16 MAR 06
File * E-56-14-19
Rev.

U.S.ARMY ENGINEER DISTRICT, SEATTLE
CORPS OF ENGINEERS
SEATTLE, WASHINGTON

ADDITIONAL WATER STORAGE PROJECT
HOWARD HANSON DAM
ELEVATOR HOISTWAY SECTION
GREEN RIVER WASHINGTON

Plate number: M-351
Sheet of

DATE AND TIME PLOTTED: 07-AUG-2008 11:54
DESIGN FILE: I:\AECDESIGNS\HHAW-351sec.DGN

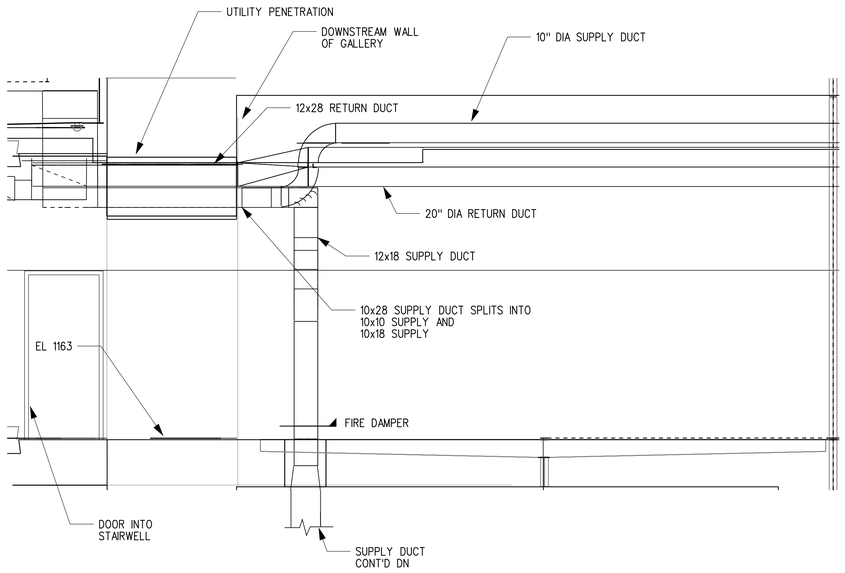

GALLERY SECTION

A M-108

3/8" = 1' - 0" 12'6"0 1' 2' 3' 4' 5' 6' 7'

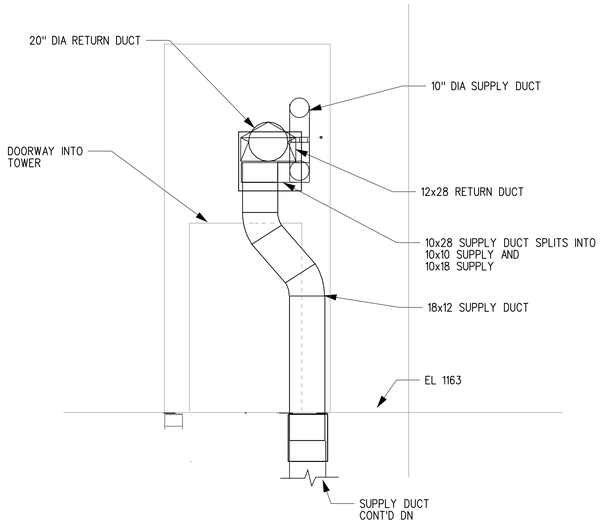

GALLERY SECTION

B M-108

3/8" = 1' - 0" 12'6"0 1' 2' 3' 4' 5' 6' 7'

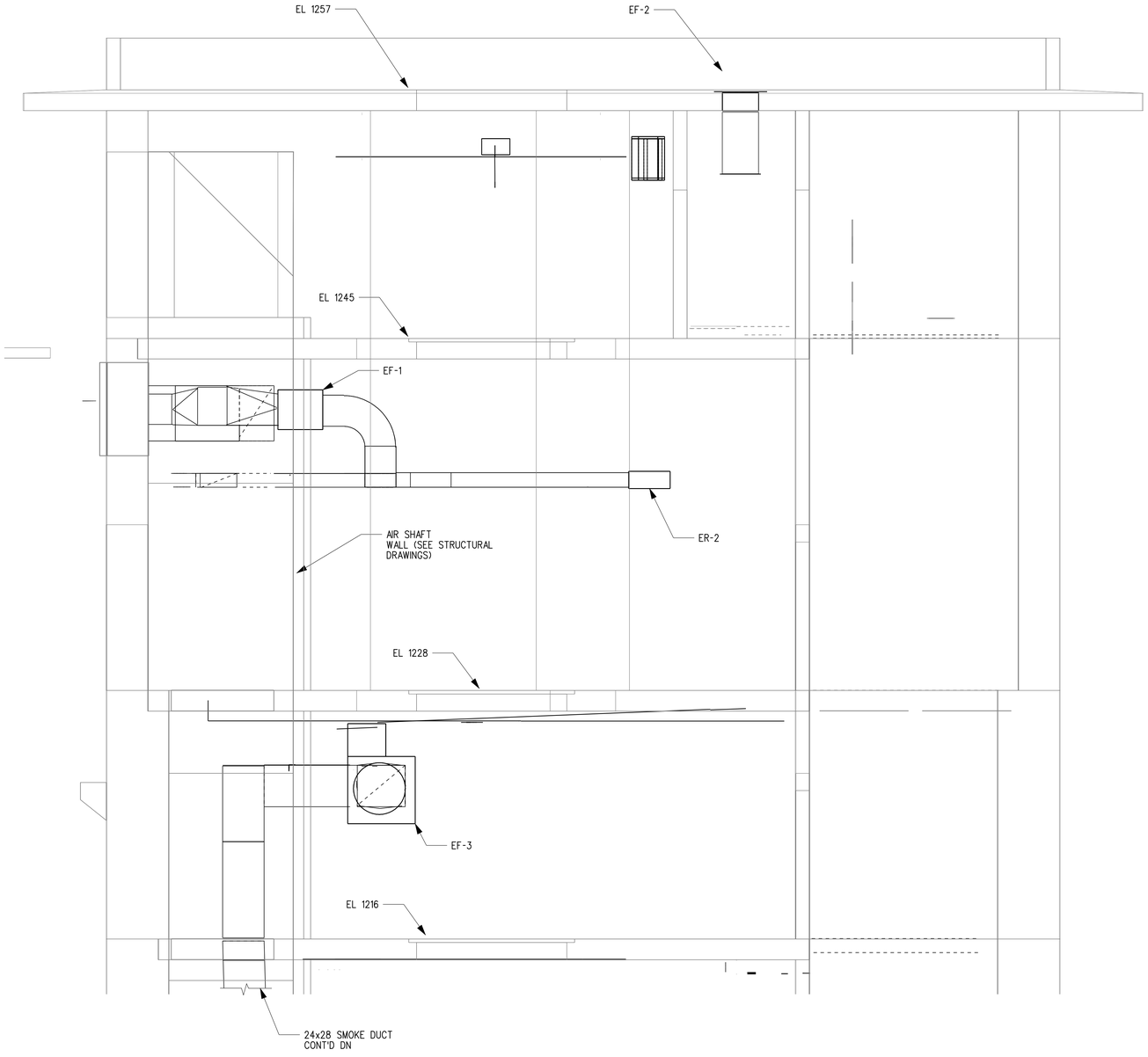

1228 ELEC RM ELEV

C M-112

3/8" = 1' - 0" 12'6"0 1' 2' 3' 4' 5' 6' 7'

US Army Corps of Engineers
Seattle District

Symbol	Description	Appr.	Date
			/ /

Designed by: DJB
Drawn by: DJB
Checked by:
Date: 16 MAR 06
File: E-56-14-19
Rev.

U.S.ARMY ENGINEER DISTRICT,SEATTLE
CORPS OF ENGINEERS
SEATTLE, WASHINGTON
Prepared by:

ADDITIONAL WATER STORAGE PROJECT
HOWARD HANSON DAM
GREEN RIVER WASHINGTON

MISC HVAC SECTIONS

Plate number:
M-352
Sheet of

DATE AND TIME PLOTTED: 07-AUG-2008 11:56
DESIGN FILE: J:\AECDESIGNS\HHAW\Mechanical\HHAWM-355sec.DGN

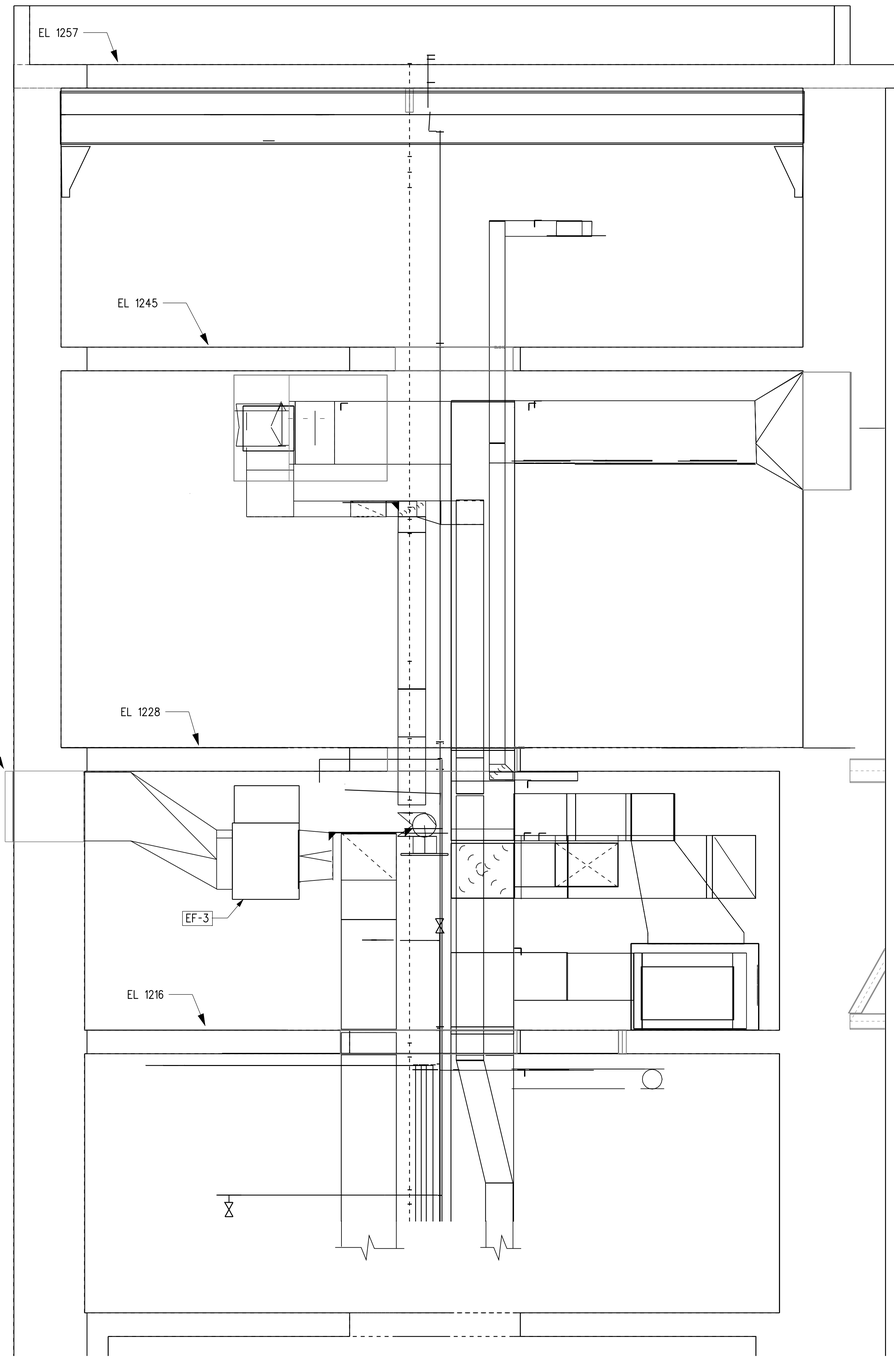

1228 ELEC RM ELEV

3/8" = 1'-0" 12'6"0 1' 2' 3' 4' 5' 6' 7'

A
M-112
M-113
M-302
M-404

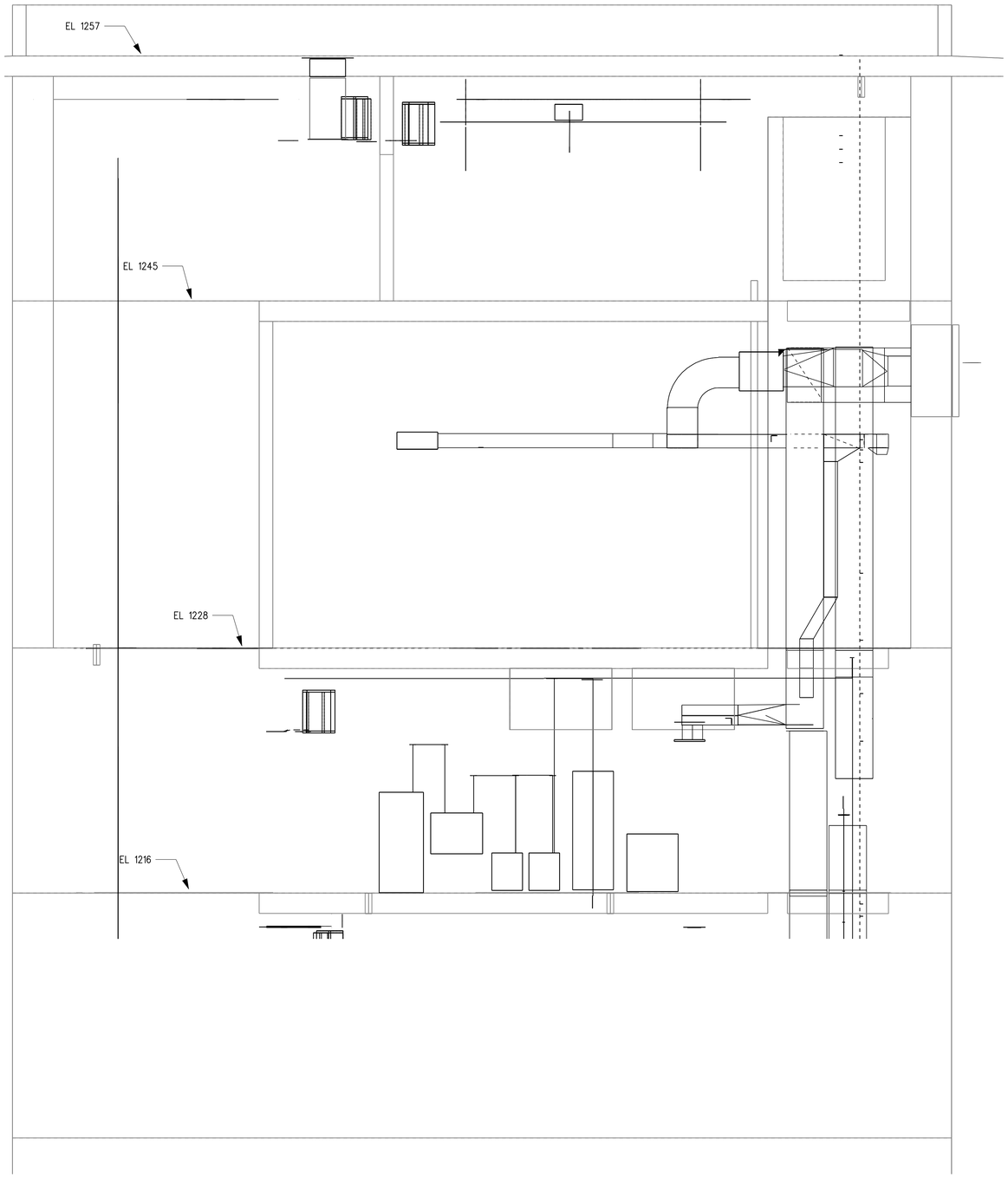

1228 ELEC RM ELEV

3/8" = 1'-0" 12'6"0 1' 2' 3' 4' 5' 6' 7'

B
M-112
M-113
M-404

US Army Corps of Engineers
Seattle District

Symbol	Description	Symbol	Appr.	Date	Description
				/ /	

Designed by: DJB
Drawn by: DJB
Checked by:
Date: 16 MAR 06
File: E-56-14-19
Rev.

U.S.ARMY ENGINEER DISTRICT, SEATTLE
CORPS OF ENGINEERS
SEATTLE, WASHINGTON
Prepared by:

ADDITIONAL WATER STORAGE PROJECT
HOWARD HANSON DAM
GREEN RIVER

MISC HVAC SECTIONS II

WASHINGTON

Plate number:
M-353
Sheet of

DATE AND TIME PLOTTED: 07-AUG-2008 11:58 DESIGN FILE: J:\AECDESIGNS\HHAW\Mechanical\HHAWM-356sec.DGN

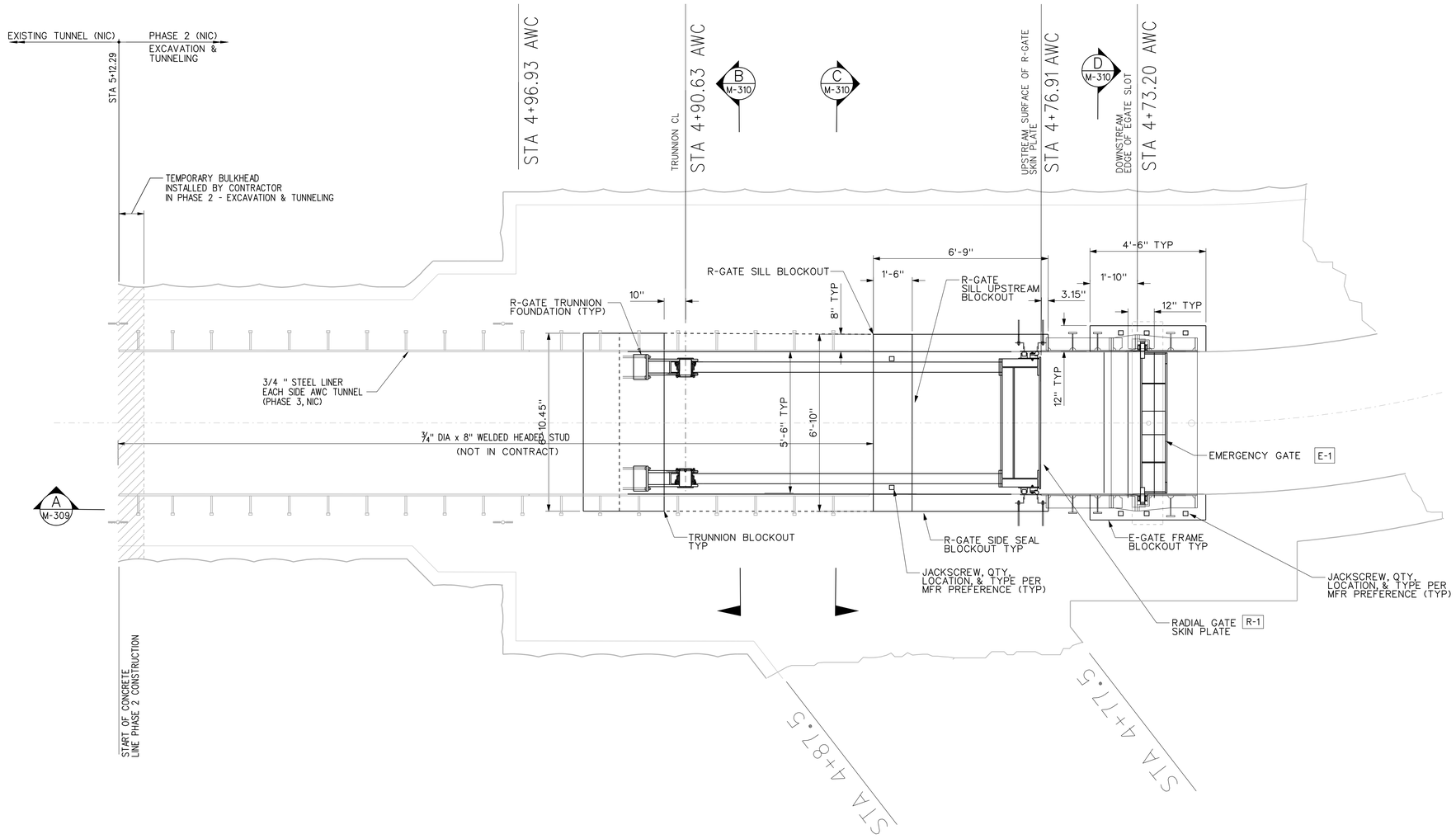

NOTE: ITEMS SHOWN IN GREY TONE ARE NOT IN CONTRACT

AWC PLAN EL 1029.00

1/4" = 1' - 0" 5' 0 5'

US Army Corps of Engineers
Seattle District

Symbol	Description	Appr.	Date
			/ /

Designed by: DJB
Drawn by: DJB
Checked by:
Date: 16 MAR 06
File • E-56-14-19
Rev.

U.S.ARMY ENGINEER DISTRICT, SEATTLE
CORPS OF ENGINEERS
SEATTLE, WASHINGTON
Prepared by:

ADDITIONAL WATER STORAGE PROJECT
HOWARD HANSON DAM
AWC GATE PLAN
EL 1029.0
GREEN RIVER WASHINGTON

Plate number:
M-401
Sheet of

DATE AND TIME PLOTTED: 07-AUG-2008 11:59
DESIGN FILE: I:\AECDESIGNS\HHAW\Mechanical\HHAWM-401rg1.DGN

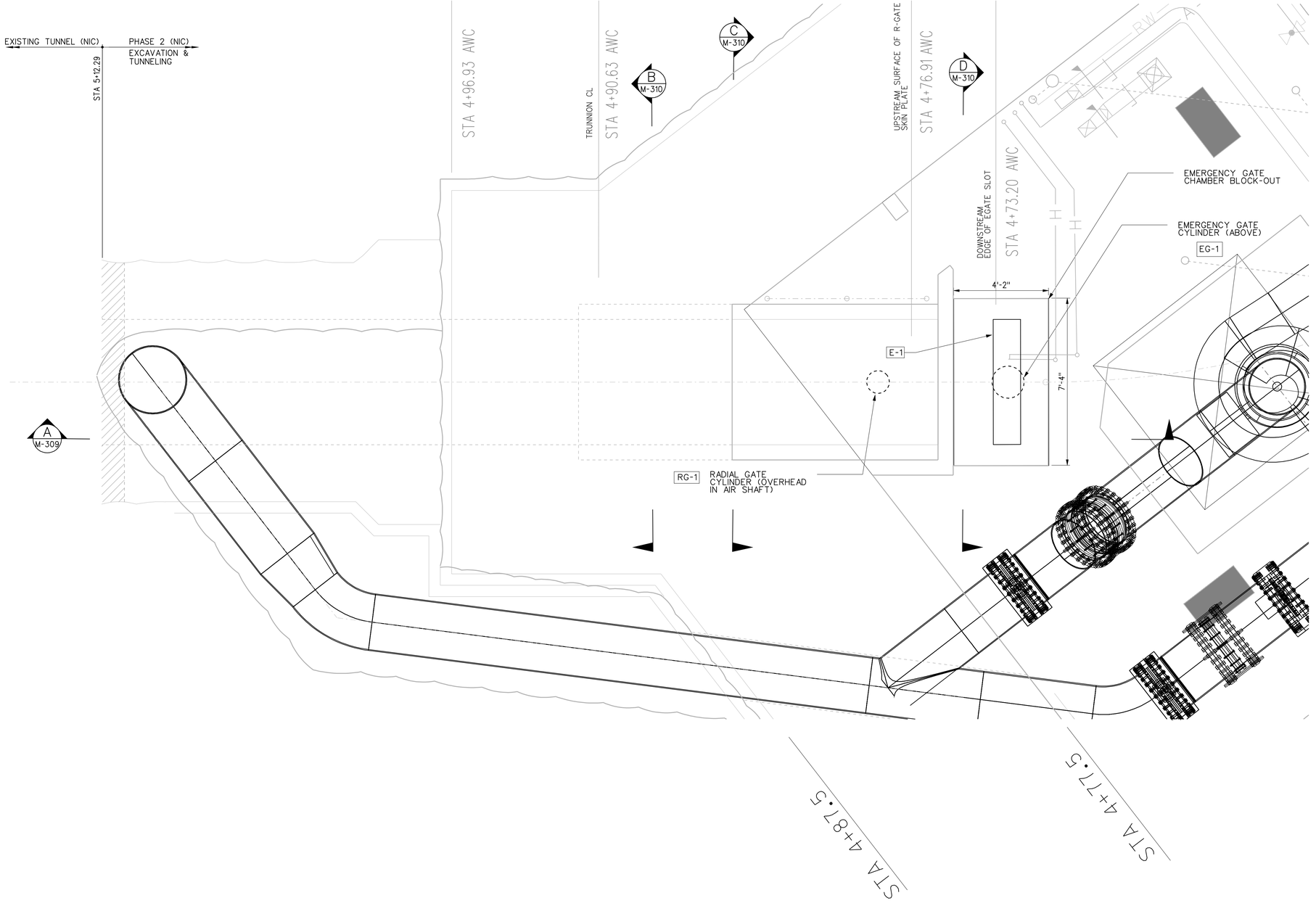

NOTE: ITEMS SHOWN IN GREY TONE ARE NOT IN CONTRACT

GATE CHAMBER PLAN EL 1042.00

1/4" = 1'-0" 5' 0 5'

US Army Corps of Engineers
Seattle District

Symbol	Description	Date	Appr.	Symbol	Description
		/ /			

Designed by: DJB
Drawn by: DJB
Checked by:
Prepared by:

Date: 16 MAR 06
File • E-56-14-19
Rev.

U.S.ARMY ENGINEER DISTRICT,SEATTLE
CORPS OF ENGINEERS
SEATTLE, WASHINGTON

ADDITIONAL WATER STORAGE PROJECT
HOWARD HANSON DAM

AWC GATE PLAN EL 1042.0

GREEN RIVER WASHINGTON

Plate number:
M-402
Sheet of

DATE AND TIME PLOTTED: 07-AUG-2008 11:59 DESIGN FILE: I:\AECDESIGNS\HHAW\Mechanical\HHAWM-402rg2.DGN

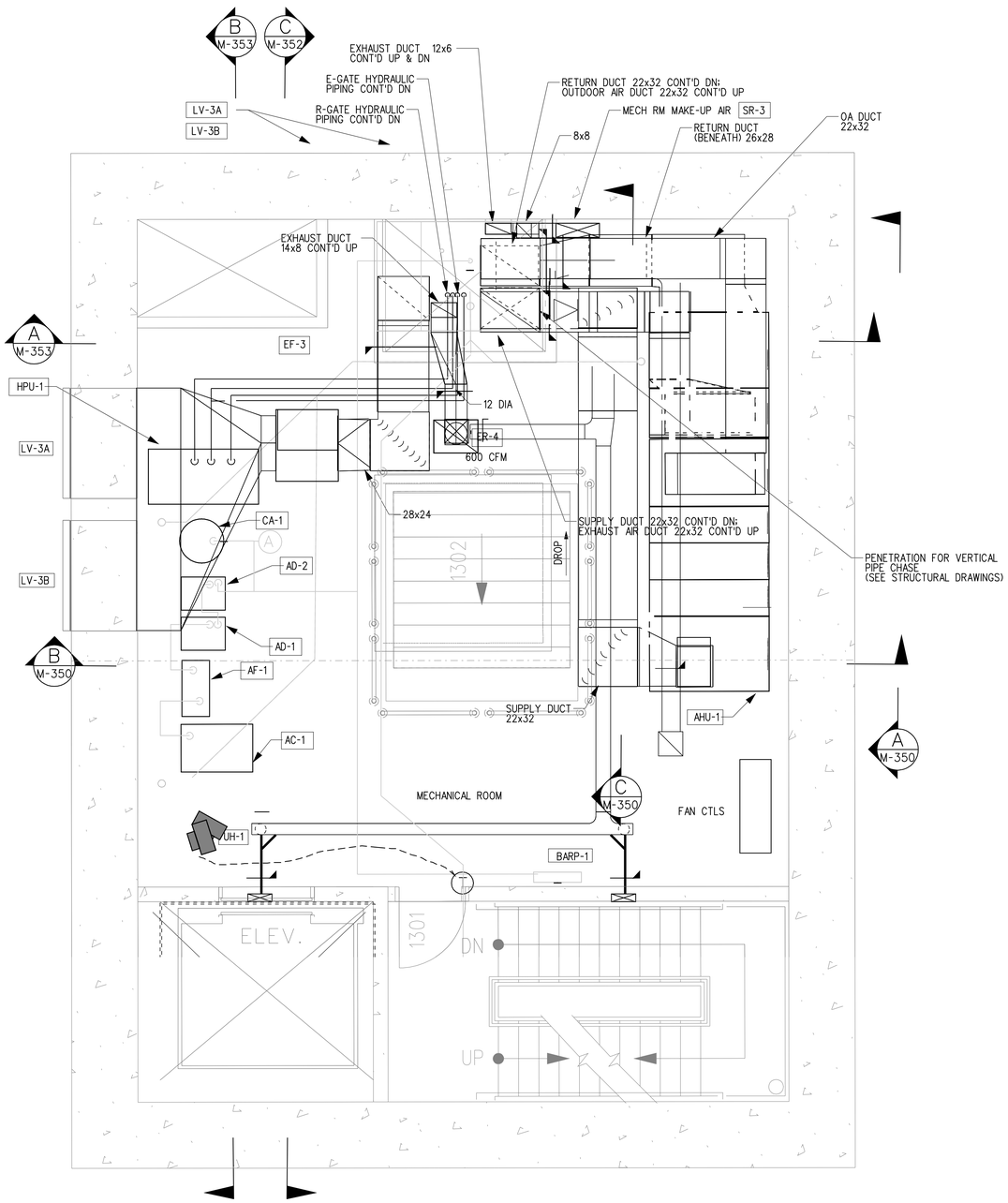

MECHANICAL RM PLAN EL 1216

3/8" = 1'-0" 12'6"0 1' 2' 3' 4' 5' 6' 7'

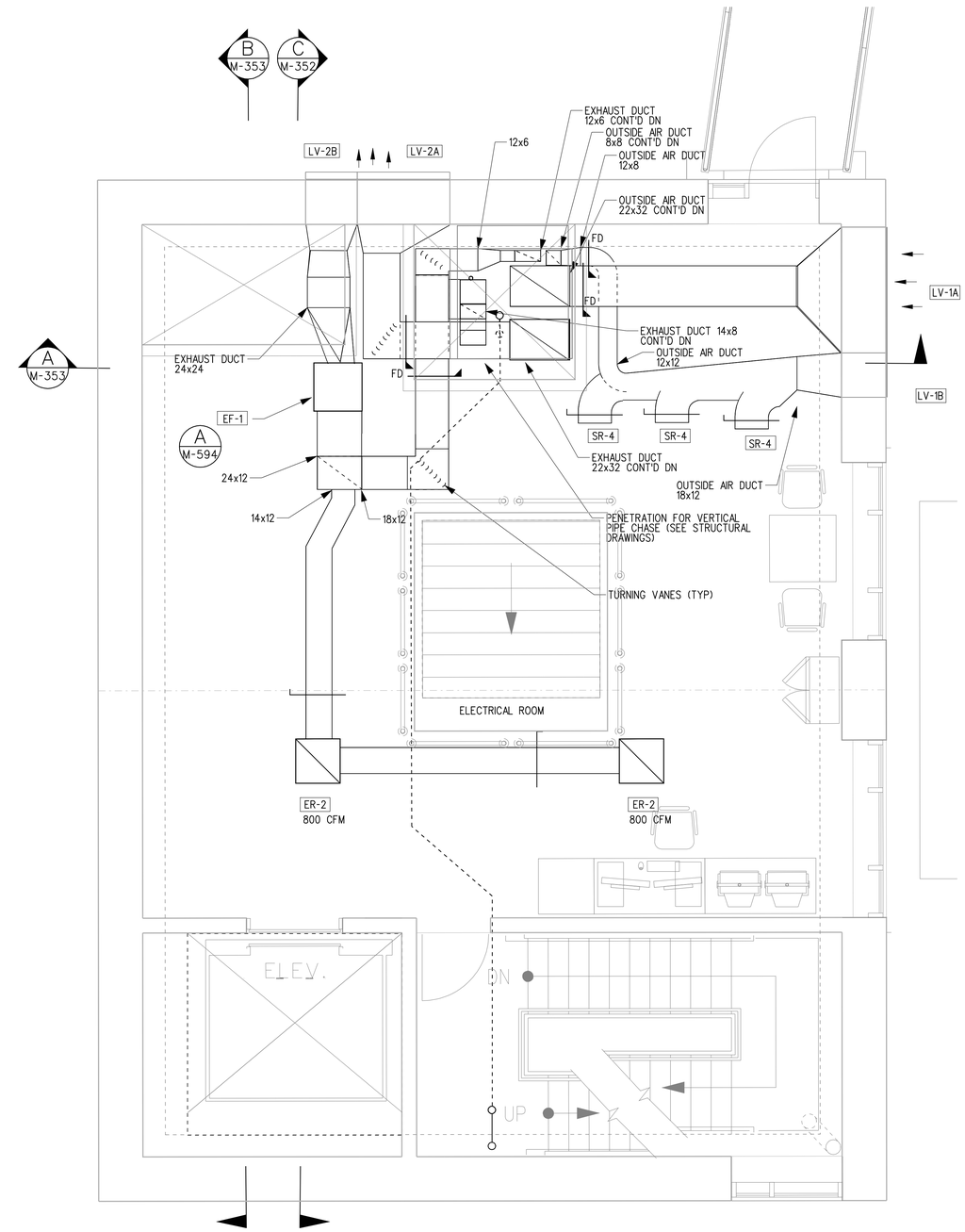

ELECTRICAL RM PLAN EL 1228

3/8" = 1'-0" 12'6"0 1' 2' 3' 4' 5' 6' 7'

N

US Army Corps of Engineers
Seattle District

Symbol	Description	Date
		/ /

Appr.	Symbol	Description

Date: 16 MAR 06
File: E-56-14-19
Rev.

Designed by:
Drawn by:
Checked by:

U.S.ARMY ENGINEER DISTRICT,SEATTLE
CORPS OF ENGINEERS
SEATTLE, WASHINGTON
Prepared by:

ADDITIONAL WATER STORAGE PROJECT
HOWARD HANSON DAM
GREEN RIVER WASHINGTON

ENLARGED MECH & ELEC RM PLANS

Plate number:
M-404
Sheet of

DESIGN FILE: I:\AECDESIGNS\HHAW\Mechanical\HHAWM-404rg4.DGN
DATE AND TIME PLOTTED: 07-AUG-2008 12:00

TOWER BF

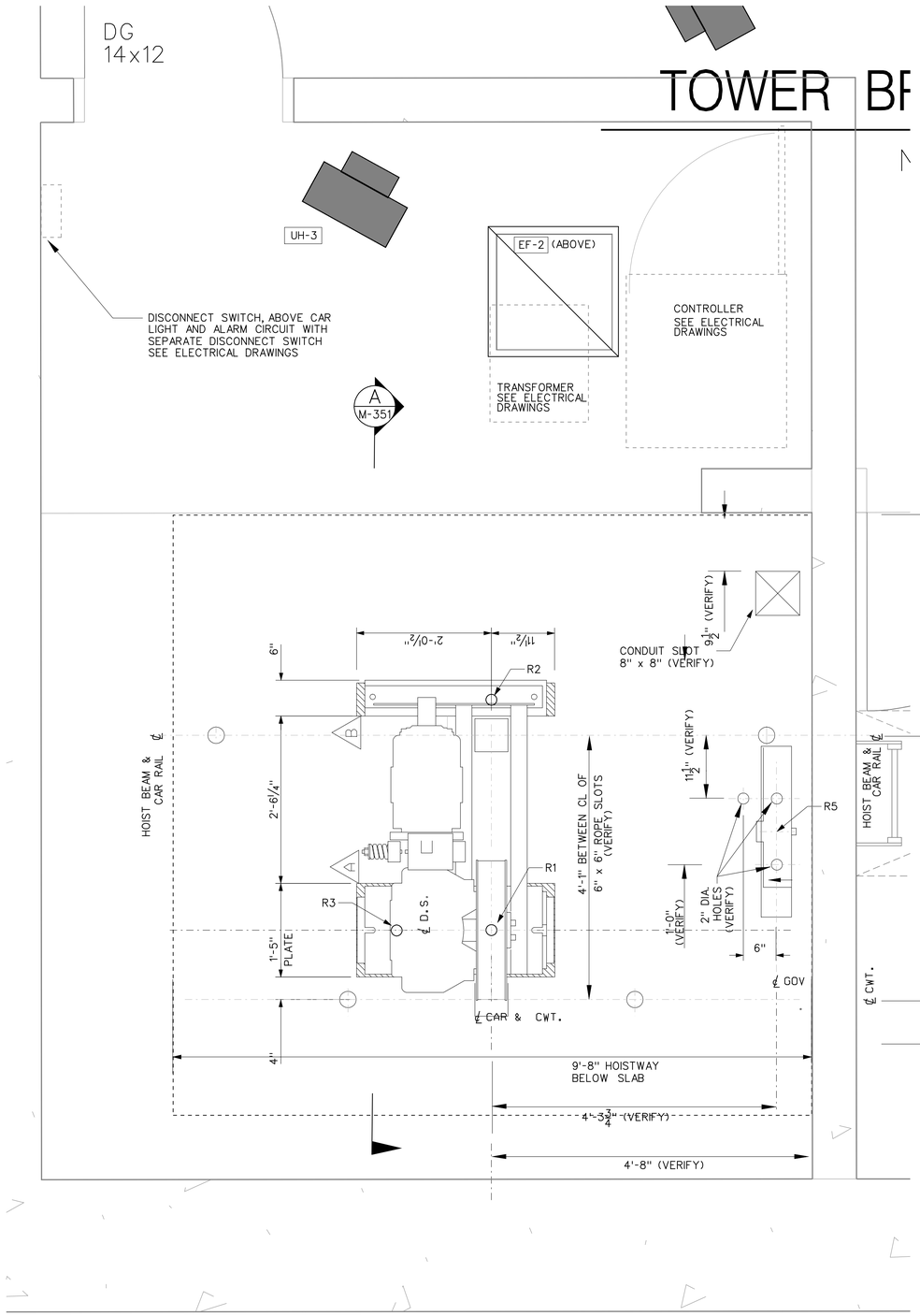

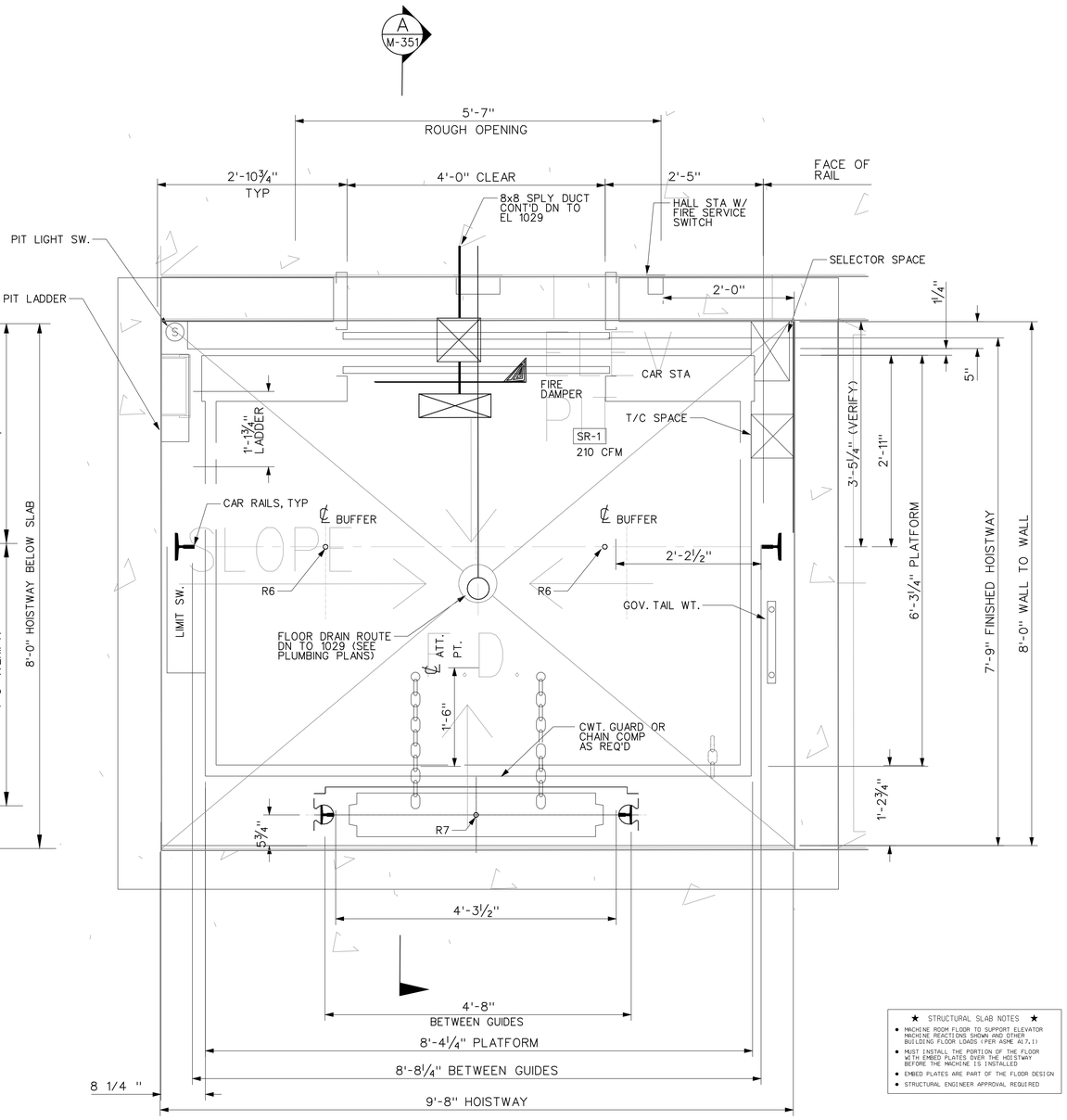

★ STRUCTURAL SLAB NOTES ★

- MACHINE ROOM FLOOR TO SUPPORT ELEVATOR MACHINE REACTIONS SHOWN AND OTHER BUILDING FLOOR LOADS (PER ASME A17.1)
- MUST INSTALL THE PORTION OF THE FLOOR WITH EMBED PLATES OVER THE HOISTWAY BEFORE THE MACHINE IS INSTALLED
- EMBED PLATES ARE PART OF THE FLOOR DESIGN
- STRUCTURAL ENGINEER APPROVAL REQUIRED

MACHINE BEAM REACTIONS (LBS.)	
R1	20,000
R2	11,700
R3	600

GOVERNOR REACTION (LBS.)	
R5	1,650

ELEV MCHRY RM PLAN EL 1245

¾" = 1' - 0" 12" 6" 0 1' 2' 3'

NOTE: CONTRACTOR SHALL FIELD VERIFY ALL DIMENSIONS

MACHINE BEAMS AND BEARING PLATES		
QTY.	MARK	DESCRIPTION
2	A	W12 x 22 x 9'-2" LONG
2	B	6" x 2'-3" STEEL PLATE

ELEV HOISTWAY PLAN EL 1037

¾" = 1' - 0" 12" 6" 0 1' 2' 3'

NOTE: CONTRACTOR SHALL FIELD VERIFY ALL DIMENSIONS & MACHINE REACTIONS..

BUFFER REACTIONS (LBS.)	
R6	15,650
R7	19,650

US Army Corps of Engineers
Seattle District

Symbol	Description	Date
Appr.		/ /

Designed by: DJB
Drawn by: DJB
Checked by:
Prepared by:
Date: 16 MAR 06
File: E-56-14-19
Rev.

U.S.ARMY ENGINEER DISTRICT,SEATTLE
CORPS OF ENGINEERS
SEATTLE, WASHINGTON

ADDITIONAL WATER STORAGE PROJECT
HOWARD HANSON DAM
GREEN RIVER WASHINGTON

ENLARGED ELEV & HOISTWAY PLANS

Plate number:
M-405
Sheet of

DESIGN FILE: I:\AECDESIGNS\HHAW\Mechanical\HHAWM-405rg5.DGN
DATE AND TIME PLOTTED: 07-AUG-2008 12:00

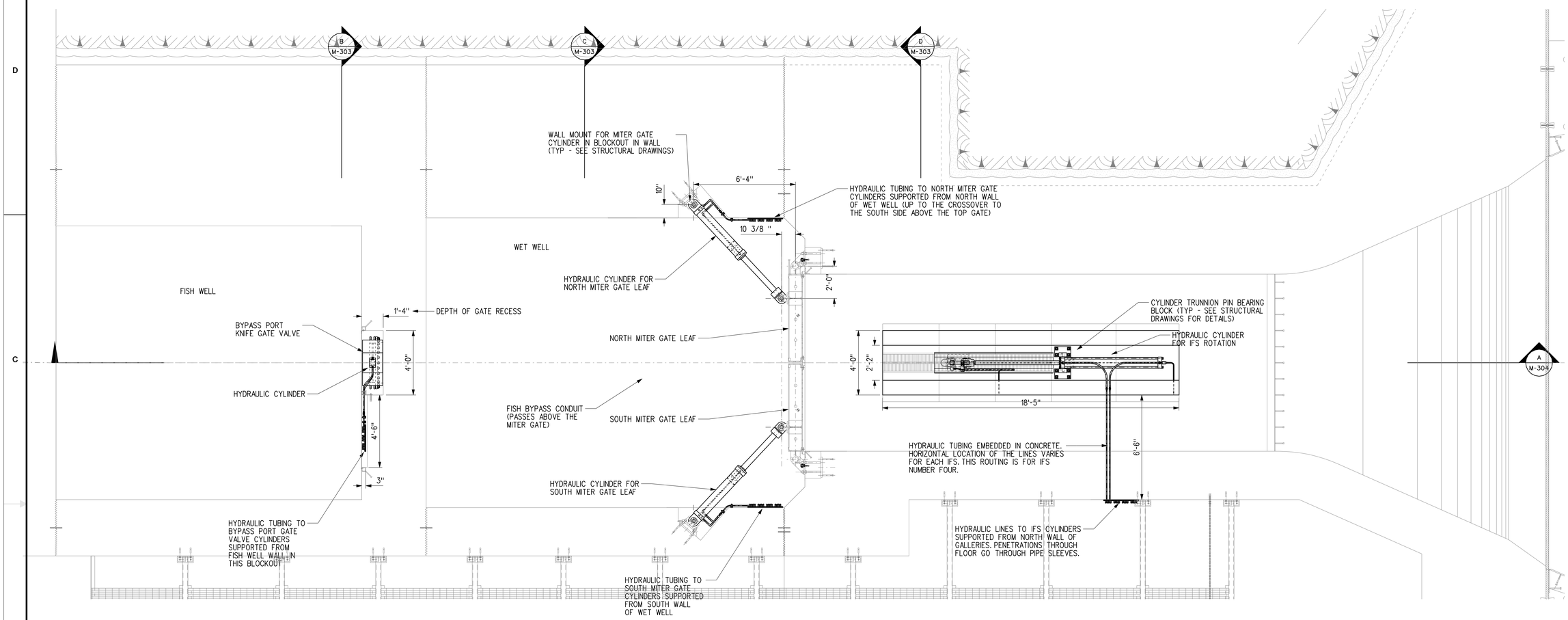

TYPICAL PLAN VIEW OF FISH COLLECTOR EQUIPMENT

3/8" = 1'-0" 12"6"0 1' 2' 3' 4' 5' 6' 7'

NOTES:

1. NOT ALL EQUIPMENT IS SHOWN ON THIS SHEET FOR CLARITY.
2. SEE STRUCTURAL DRAWINGS FOR IFS AND MITER GATE DETAILS AND FOR DETAILS OF THE WALL MOUNTING OF THE BYPASS PORT GATE VALVES.
3. CONTROLS CABLE/CONDUIT TO PROXIMITY SWITCHES/TRANSDUCERS NOT SHOWN.
4. ALL COMPONENTS OF THE HYDRAULIC SYSTEMS FOR THE BYPASS PORT GATE VALVES, MITER GATES, AND IFS SHALL BE SUITABLE FOR USE WITH TAP WATER AS THE HYDRAULIC FLUID.

US Army Corps of Engineers
Seattle District

Symbol	Description	Appr.	Date
			/ /

Designed by: EC
Drawn by: EC
Checked by: X
Date: 16 MAR 06
File # E-56-14-19
Rev.

U.S.ARMY ENGINEER DISTRICT,SEATTLE
CORPS OF ENGINEERS
SEATTLE, WASHINGTON
Prepared by:

ADDITIONAL WATER STORAGE PROJECT
HOWARD HANSON DAM
TYPICAL FISH COLLECTOR EQUIPMENT PLAN
GREEN RIVER WASHINGTON

Plate number:
M-410
Sheet of

DATE AND TIME PLOTTED: 07-AUG-2008 12:01
DESIGN FILE*: J:\ACEDESIGNS\HHAW\Mechanical\HHAWM-410EC1.DGN

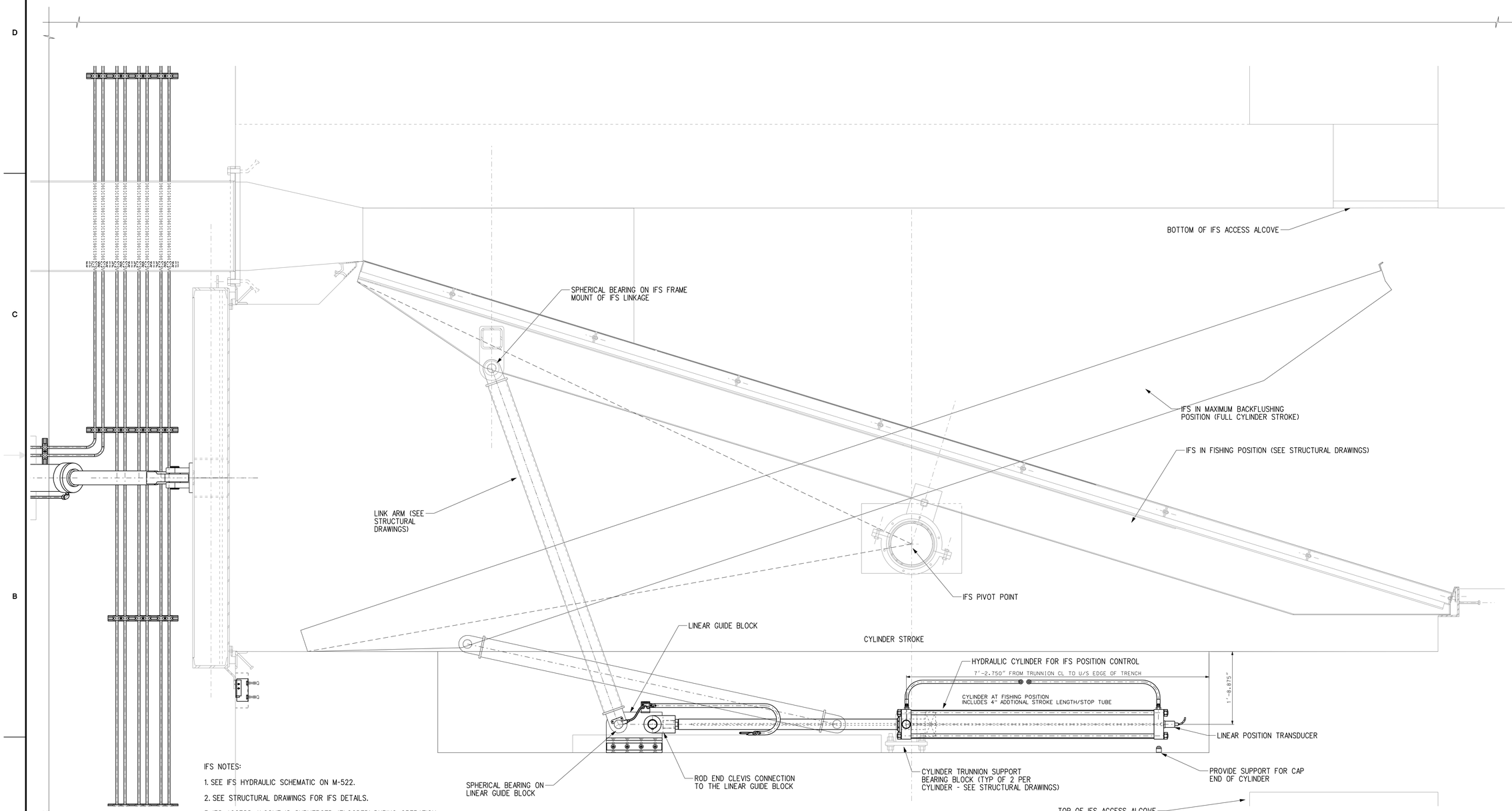

IFS NOTES:

1. SEE IFS HYDRAULIC SCHEMATIC ON M-522.

2. SEE STRUCTURAL DRAWINGS FOR IFS DETAILS.

3. IFS ACCESS ALCOVE IS SUBMERGED (FLOODED) DURING OPERATION. ACCESS TO THE IFS ACCESS ALCOVE IS BY WATERTIGHT DOOR IN THE ACCESS GALLERY (ONLY WHEN FPF IS DEWATERED).

4. THERE ARE FIVE INCLINED FISH SCREENS (IFS). EACH IFS HAS ONE HYDRAULIC CYLINDER USED FOR CONTROLLING THE ANGLE OF ROTATION OF THE IFS.

5. IFS IS HELD IN FISHING POSITION BY MAINTAINING PRESSURE IN THE HYDRAULIC CYLINDER. ENSURE THAT NO GAP EXISTS BETWEEN THE TOP OF THE SCREEN AND THE STRUCTURAL SUPPORTS (GUIDEWALLS, BYPASS ENTRANCE) DURING FISH PASSAGE OPERATION.

6. IFS SHALL BE SET TO HORIZONTAL POSITION (SCREEN AT 0°) WHEN FACILITY IS NOT OPERATIONAL.

7. EACH IFS HYDRAULIC CYLINDER SHALL BE PROVIDED WITH A LINEAR POSITION TRANSDUCER WHICH SHALL CONTINUOUSLY FEED CYLINDER POSITION BACK TO THE PLC. SEE SCHEDULE FOR DETAILS.

8. HYDRAULIC LINE PENETRATIONS THROUGH CONCRETE SHALL BE CONSTRUCTED IN SUCH A WAY THAT THE HYDRAULIC LINES ARE SHIELDED FROM THE CONCRETE AND ARE NOT DIRECTLY EMBEDDED WITHIN THE CONCRETE.

X / M-304 DETAIL

1" = 1'-0" 12"9" 6" 3" 0 1' 2'

US Army Corps of Engineers
Seattle District

Symbol	Description	Date	Appr.	Symbol	Description
		/ /			

Designed by: EC
Drawn by: EC
Checked by: X
Date: 16 MAR 06
File: E-56-14-19
Rev:

U.S.ARMY ENGINEER DISTRICT,SEATTLE
CORPS OF ENGINEERS
SEATTLE, WASHINGTON
Prepared by:

ADDITIONAL WATER STORAGE PROJECT
HOWARD HANSON DAM
GREEN RIVER WASHINGTON

IFS VIEWS

Plate number: M-501
Sheet of

DESIGN FILE: I:\AECDESIGNS\HHAW\Mechanical\HHAWM-501GENL.DGN
DATE AND TIME PLOTTED: 07-AUG-2008 12:01

NOTES:

1. SEE MITER GATE HYDRAULIC SCHEMATIC ON M-532 AND HYDRAULIC SCHEDULE ON M-533.

2. SEE STRUCTURAL DRAWINGS FOR MITER GATE DETAILS.

3. THERE ARE FIVE MITER GATES, AND EACH GATE IS COMPOSED OF TWO VERTICAL GATE LEAVES. EACH GATE LEAF IS INDIVIDUALLY ACUTATED BY A HORIZONTALLY PIVOTING HYDRAULIC CYLINDER. THERE ARE A TOTAL OF TEN HYDRAULIC CYLINDERS OPERATING ALL OF THE MITER GATES.

4. MITER GATES ARE NORMALLY SUBMERGED DURING OPERATION. PURPOSE OF MITER GATES IS TO PROVIDE A HYDRAULIC SEAL BETWEEN THE WET WELL AND THE ENTRANCE WELL FOR AN INDIVIDUAL FISH COLLECTOR.

5. HYDRAULIC LINE ROUTING IS SHOWN IN SCHEMATIC FASHION ONLY. ACTUAL ROUTING MAY VARY. HYDRAULIC LINE PENETRATIONS THROUGH CONCRETE SHALL BE MINIMIZED, AND ANY SUCH PENETRATIONS SHALL BE CONSTRUCTED IN SUCH A WAY THAT THE HYDRAULIC LINES ARE SHIELDED FROM THE CONCRETE AND ARE NOT DIRECTLY EMBEDDED WITHIN THE CONCRETE.

6. HPU AND VALVE MANIFOLD (NOT SHOWN) IS LOCATED IN THE 9TH FLOOR ACCESS GALLERY. PIPING FROM ALL TEN CYLINDERS IS ROUTED TO THE HPU.

7. PROXIMITY SWITCHES SHALL BE INSTALLED AS SHOWN TO PROVIDE A SIGNAL TO THE CONTROL SYSTEM WHEN EACH MITER GATE LEAF IS FULLY OPEN OR FULLY CLOSED. ATTACHMENTS TO MITER GATES (BRACKETS), AS SHOWN IN STRUCTURAL MITER GATE DETAILS, S-XXX, SHALL SERVE AS THE TARGET WHICH ACTIVATES EACH PROXIMITY SWITCH. PROXIMITY SWITCH MOUNTING SHALL BE AS RECOMMENDED BY SWITCH MANUFACTURER. CONTRACTOR SHALL COORDINATE THE INSTALLATION OF EACH PROXIMITY SWITCH WITH THE SIZE AND LOCATION OF THE TARGET BRACKET ON THE GATE. THE SWITCH LOCATION AND BRACKET SIZE SHALL BE SUCH THAT THE SWITCH SENSES THE TARGET ONLY WHEN GATES ARE FULLY CLOSED (SEALED) OR FULLY OPEN (90 DEGREES OR 2 DEGREES LESS THAN MAXIMUM GATE POSITION, WHICHEVER IS GREATER). A SMALL AIR GAP (1/8 INCH) SHALL BE MAINTAINED BETWEEN BRACKET AND SWITCH WHEN GATES ARE FULLY OPEN OR FULLY CLOSED. TARGET FACE SHALL BE AT MINIMUM 1-1/2 INCH SQUARE, ALIGNED WITH SWITCH SENSING FACE. ALL HARDWARE SHALL BE SUBMERSIBLE TO A MINIMUM OF 150 FEET.

8. CONTROLS CABLE/CONDUIT NOT SHOWN FOR CLARITY.

9. NOTES ON MITER GATE OPERATION:

A. ANY ONE OR TWO MITER GATES IS OPEN DURING FISH PASSAGE OPERATION (SINGLE OR DUAL FISH COLLECTOR OPERATION).

B. DURING SINGLE COLLECTOR OPERATION, AT LEAST ONE OF THE SUBMERGED FISH COLLECTOR MITER GATES SHALL BE OPEN AT ANY GIVEN TIME DURING FACILITY OPERATION, TO ENSURE THAT A FLOW PATH EXISTS BETWEEN THE ENTRANCE WELL AND THE WET WELL. WHEN SWITCHING OPERATION TO A DIFFERENT COLLECTOR, THE MITER GATE OF THE NEXT COLLECTOR SHALL BE OPENED PRIOR TO THE CLOSING OF THE MITER GATE OF THE PRESENTLY OPERATING COLLECTOR.

C. DURING DUAL COLLECTOR OPERATION, AT LEAST TWO OF THE SUBMERGED FISH COLLECTOR MITER GATES SHALL BE OPEN AT ANY GIVEN TIME DURING FACILITY OPERATION, TO ENSURE THAT EXCESSIVE HEAD LOSS IS NOT INCURRED BY FORCING DUAL COLLECTOR FLOW RATES THROUGH A SINGLE COLLECTOR. WHEN SWITCHING OPERATION TO A DIFFERENT COMBINATION OF COLLECTORS, THE MITER GATE OF THE NEXT COLLECTOR SHALL BE OPENED PRIOR TO THE CLOSING OF THE MITER GATE OF ONE OF THE PRESENTLY OPERATING COLLECTORS. THEREFORE DURING THIS SEQUENCE THERE WILL EXIST A SHORT TIME WHEN THERE ARE THREE FISH COLLECTOR MITER GATES OPEN AT THE SAME TIME.

D. FISH COLLECTORS SHOULD NOT BE OPERATED UNLESS THERE EXISTS ADEQUATE SUBMERGENCE AT THE COLLECTOR ENTRANCE. A SUBMERGENCE OF 7.24 FEET, MEASURED FROM THE ENTRANCE WELL SURFACE TO THE COLLECTOR CEILING, WILL BE REQUIRED TO AVOID VORTEX FORMATION AT A 600 CFS FLOWRATE. TABLE 1 BELOW LISTS THREE ELEVATIONS FOR EACH COLLECTOR: THE RECOMMENDED SUBMERGENCE, THE SUBMERGENCE TO THE TOP OF THE HORN, AND THE SUBMERGENCE TO THE TOP OF THE COLLECTOR CEILING. THIS THIRD VALUE SHALL BE USED AS A LIMITING VALUE. AT NO TIME SHALL COLLECTOR OPERATION BE ALLOWED WITH A SUBMERGENCE ANY LOWER THAN THE TOP OF THE COLLECTOR CEILING. NOTE THAT THE BOTTOM (COLLECTOR 1) AND TOP (COLLECTOR 5) COLLECTORS HAVE SLIGHTLY DIFFERENT RECOMMENDED SUBMERGENCES. BECAUSE THE MINIMUM OPERATING POOL FOR FPF OPERATION IS AT ELEVATION 1080 FEET, COLLECTOR NUMBER 1 WILL ALWAYS HAVE AT LEAST 7.24 FEET OF SUBMERGENCE DURING FPF OPERATION. COLLECTOR NUMBER 5 IS LOCATED SO THAT IT'S CEILING IS 7 FEET BELOW THE SURFACE OF THE MAXIMUM POOL FOR PHASE 1 OF AWS (1167 FEET), SO THERE MAY BE SLIGHTLY LESS THAN IDEAL SUBMERGENCE FOR COLLECTOR NUMBER 5 WHEN OPERATING AT 600 CFS DURING A PHASE 1 POOL.

TABLE 1: ENTRANCE WELL POOL ELEVATIONS FOR VARIOUS FISH COLLECTOR SUBMERGENCE VALUES

FISH COLLECTOR	7.24 FT SUBMERGENCE (RECOMMENDED)	2.68 FT SUBMERGENCE (TOP OF HORN)	0 FT SUBMERGENCE (TOP OF CEILING)
COLLECTOR 1	1079.37*	1074.81	1072.13
COLLECTOR 2	1101.33	1096.77	1094.09
COLLECTOR 3	1123.29	1118.73	1116.05
COLLECTOR 4	1145.25	1140.69	1138.01
COLLECTOR 5	1167.21	1162.65	1159.97

*COLLECTOR 1 SHALL NOT OPERATE WITH A POOL LEVEL LOWER THAN 1080 FEET, WHICH IS THE MINIMUM POOL LEVEL FOR FPF OPERATION.

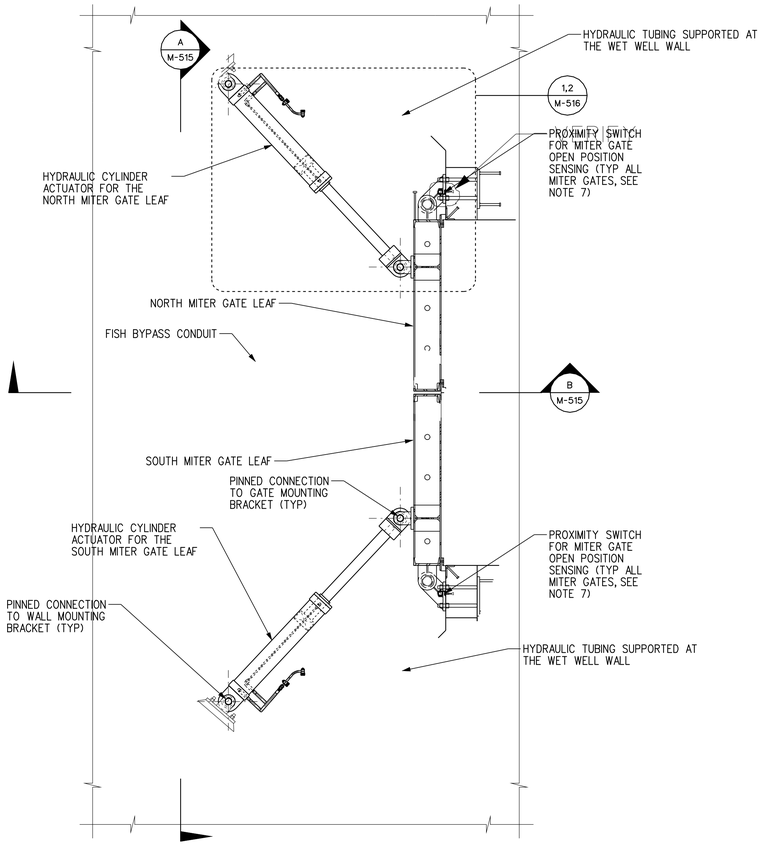

TYPICAL MITER GATE PLAN VIEW

½" = 1' - 0" 12"6" 0 1' 2' 3' 4' 5'

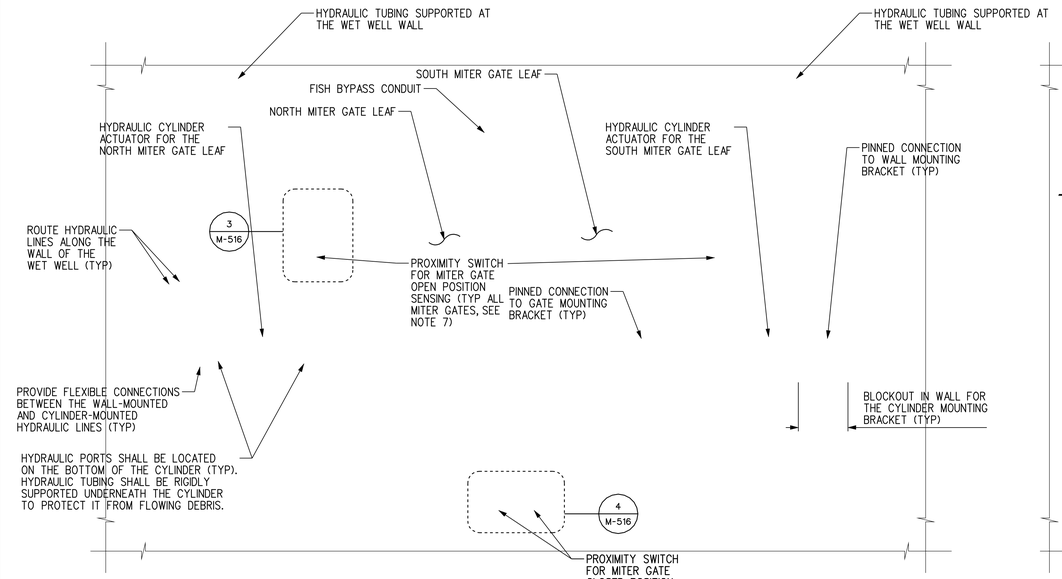

A M-515 SECTION

½" = 1' - 0" 12"6" 0 1' 2' 3' 4' 5'

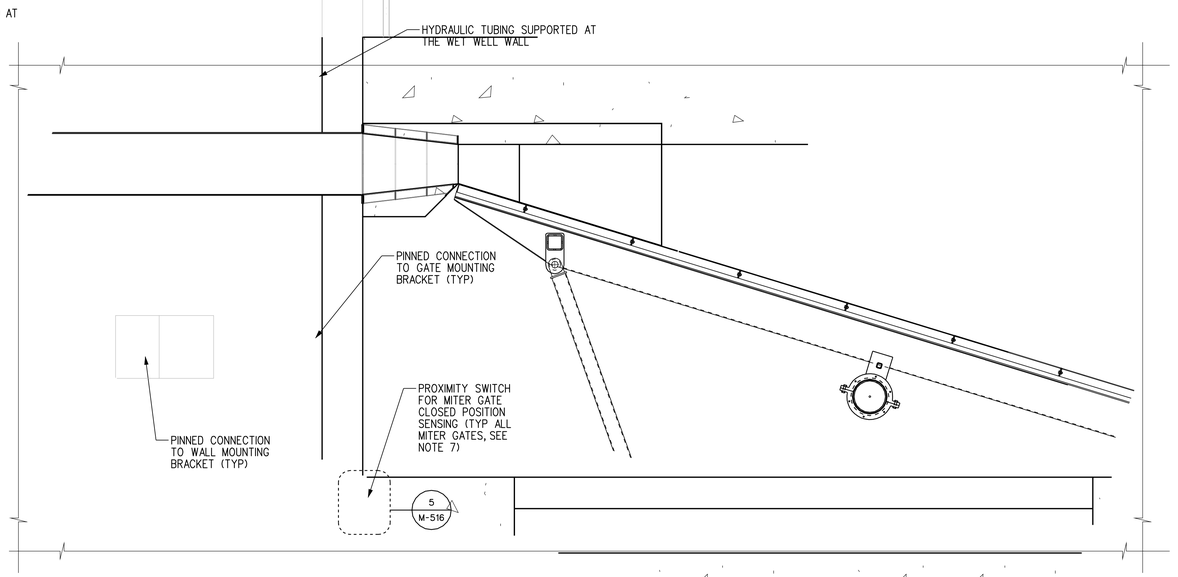

B M-515 SECTION

½" = 1' - 0" 12"6" 0 1' 2' 3' 4' 5'

US Army Corps of Engineers
Seattle District

Symbol	Description	Date	Appr.	Symbol	Description
		/ /			

Date: 16 MAR 06
File: E-56-14-19
Rev.

Designed by: EC/AMM
Drawn by: EC/AMM
Checked by: X

U.S.ARMY ENGINEER DISTRICT, SEATTLE
CORPS OF ENGINEERS
SEATTLE, WASHINGTON
Prepared by:

ADDITIONAL WATER STORAGE PROJECT
HOWARD HANSON DAM
MITER GATE VIEWS
GREEN RIVER WASHINGTON

Plate number: M-502
Sheet of

DESIGN FILE: I:\AECDESIGNS\HHAW\Mechanical\HHAWM-502GEN.DGN
DATE AND TIME PLOTTED: 07-AUG-2008 12:02

NOTES:

1. SEE BYPASS PORT VALVE HYDRAULIC SCHEMATIC ON M-542.

2. THERE ARE FIVE FISH WELL BYPASS PORT KNIFE GATE VALVES. VALVES SHALL PROVIDE A HYDRAULIC SEAL BETWEEN THE FISH WELL AND THE UPSTREAM WELLS. VALVES SHALL BE 30-INCH FABRIVALVE C-67 OR EQUAL. VALVE SHALL BE OF STAINLESS STEEL MATERIALS AND SUITABLE FOR CONTINUOUS SUBMERGED OPERATION. VALVES SHALL BE DESIGNED FOR THE FOLLOWING UPSTREAM HEAD PRESSURES (STATIC OPERATION):
GATE VALVE 1 = 106 FEET
GATE VALVE 2 = 84 FEET
GATE VALVE 3 = 62 FEET
GATE VALVE 4 = 40 FEET
GATE VALVE 5 = 18 FEET

3. BYPASS PORT VALVE ACTUATORS SHALL BE VERTICAL HYDRAULIC CYLINDERS DIRECTLY CONNECTED TO THE VALVE, AND SHALL BE DESIGNED FOR VALVE OPERATION UNDER A MAXIMUM DIFFERENTIAL PRESSURE OF 10 PSI.

4. VALVE SHALL BE BOLTED TO A SUPPORT AT THE UPSTREAM FLANGE, USING THREADED STUDS. SEE STRUCTURAL DRAWINGS FOR DETAILS OF THE WALL MOUNTING SYSTEM.

5. HYDRAULIC TUBING PENETRATIONS THROUGH CONCRETE SHALL BE CONSTRUCTED IN SUCH A WAY THAT THE HYDRAULIC LINES ARE SHIELDED FROM THE CONCRETE AND ARE NOT DIRECTLY EMBEDDED WITHIN THE CONCRETE.

6. HPU AND VALVE MANIFOLD (NOT SHOWN) IS LOCATED IN THE 9TH FLOOR ACCESS GALLERY. TUBING FROM ALL FIVE CYLINDERS IS ROUTED TO THE HPU.

7. BYPASS PORT VALVES SHALL BE OUTFITTED WITH PROXIMITY SWITCHES TO INDICATE FULLY OPEN AND FULLY CLOSED GATE POSITIONS. ALL HARDWARE SHALL BE SUBMERSIBLE TO A MINIMUM OF 150 FEET.

8. PROVIDE REMOVABLE COVER PLATE FOR EACH BYPASS PORT VALVE RECESS (NOT SHOWN). COVER PLATE SHALL HAVE AN OPENING TO MATCH THE OPENING OF THE VALVE IN THE OPEN POSITION. PURPOSE OF COVER PLATE IS TO SERVE AS A BARRIER BETWEEN THE FISH WELL AND THE VALVE RECESS WITHOUT IMPEDING FLOW OUT OF THE VALVE. COVER PLATE SHALL BE FLUSH WITH SURFACE OF FISH WELL WALL.

9. EQUIPMENT SHALL NOT PROTRUDE PAST THE SURFACE OF THE FISH WELL WALL. ALL VALVE EQUIPMENT, INCLUDING BUT NOT LIMITED TO HYDRAULIC LINES AND CONTROL CONDUIT, SHALL BE MOUNTED RECESSED FROM THE WALL SURFACE, AND SHALL NOT PRESENT AN OBSTACLE TO THE VERTICAL MOTION OF THE FISH WELL HOPPER THAT TRAVELS VERTICALLY THROUGH THE FISH WELL.

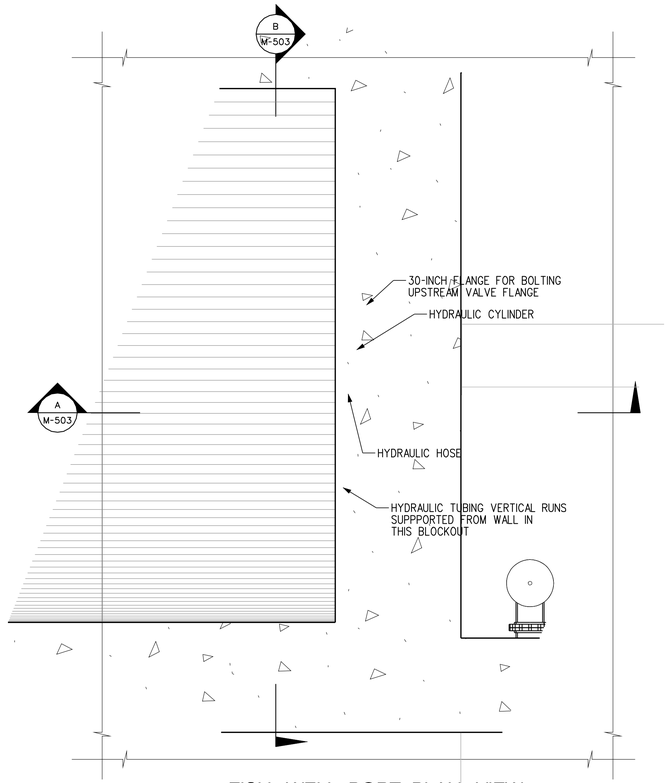

FISH WELL PORT PLAN VIEW

½" = 1'-0" 12"6" 0 1' 2' 3' 4' 5'

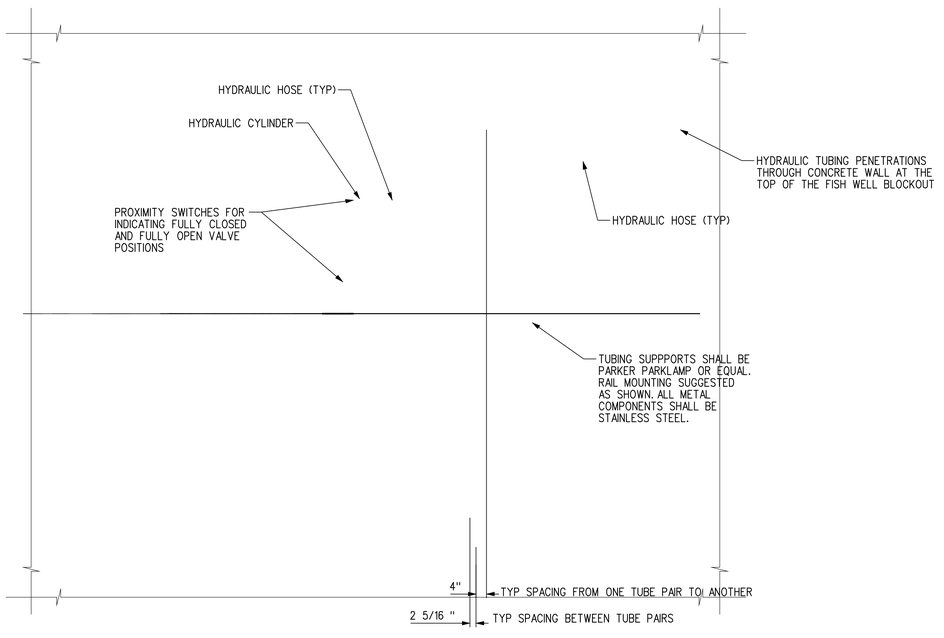

B M-503 SECTION

½" = 1'-0" 12"6" 0 1' 2' 3' 4' 5'

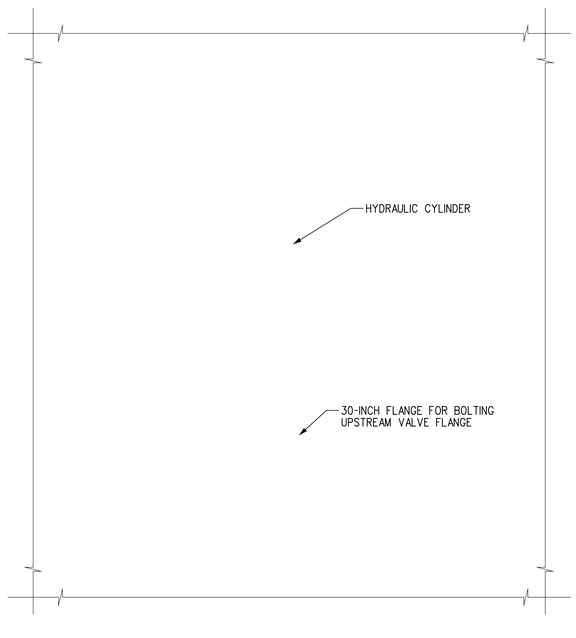

A M-503 SECTION

½" = 1'-0" 12"6" 0 1' 2' 3' 4' 5'

US Army Corps of Engineers
Seattle District

Symbol	Description	Date	Appr.	Symbol
		/ /		

Designed by: EC
Drawn by: EC
Checked by: X
Date: 16 MAR 06
File # E-56-14-19
Rev.

U.S.ARMY ENGINEER DISTRICT, SEATTLE
CORPS OF ENGINEERS
SEATTLE, WASHINGTON
Prepared by:

ADDITIONAL WATER STORAGE PROJECT
HOWARD HANSON DAM
FISH WELL PORT VIEWS
GREEN RIVER WASHINGTON

Plate number:
M-503
Sheet of

DATE AND TIME PLOTTED: 07-AUG-2008 12:03
DESIGN FILE: I:\AECDESIGNS\HHAW\Mechanical\HHAWM-503GEN.DGN

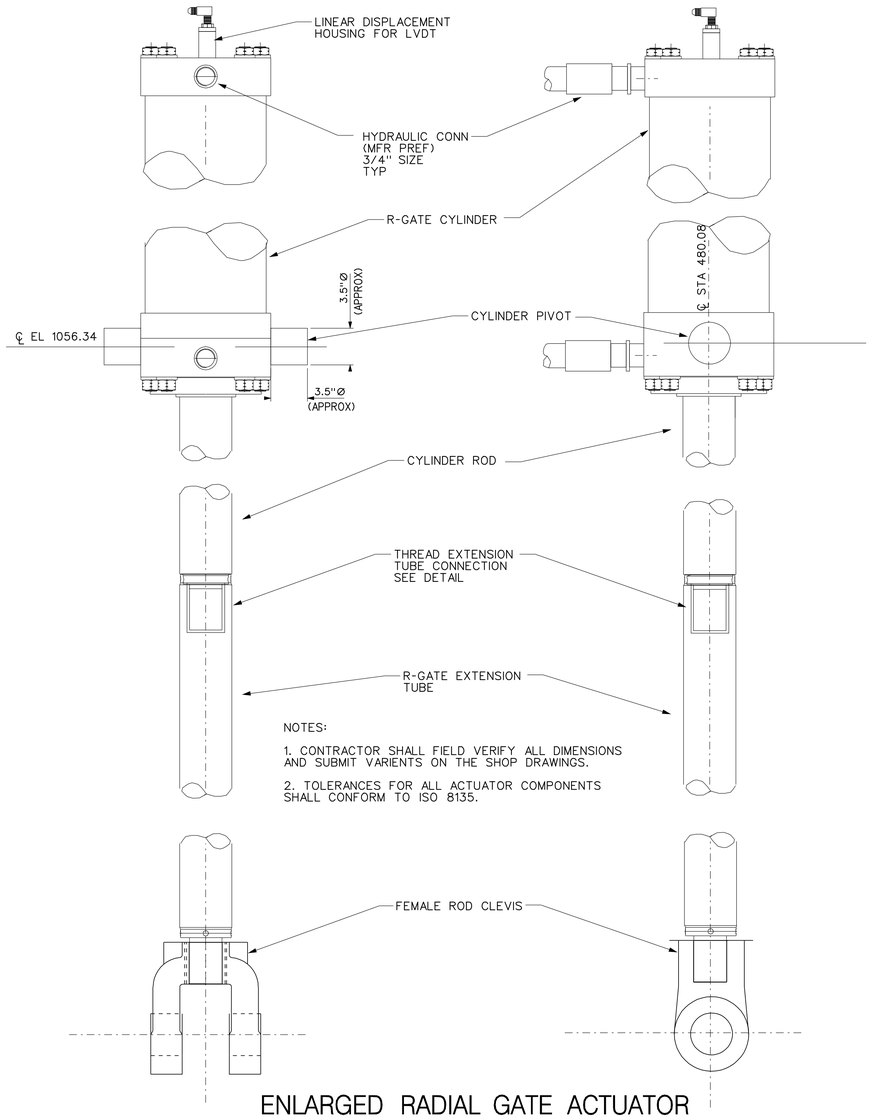

NOTES:

1. CONTRACTOR SHALL FIELD VERIFY ALL DIMENSIONS AND SUBMIT VARIENTS ON THE SHOP DRAWINGS.

2. TOLERANCES FOR ALL ACTUATOR COMPONENTS SHALL CONFORM TO ISO 8135.

ENLARGED RADIAL GATE ACTUATOR

NOT TO SCALE

2" = 1' - 0" 3" 0 6" 1' 18" 2'

MATERIAL: SEE SPECIFICATIONS
QUANTITY: 1

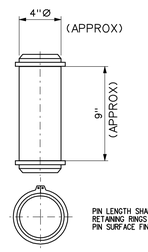

CLEVIS PIVOT PIN

NOT TO SCALE

2" = 1' - 0" 3" 0 6" 1' 18" 2'

MATERIAL: STAINLESS STEEL 17-4PH (UNS S17400)
QUANTITY: 1

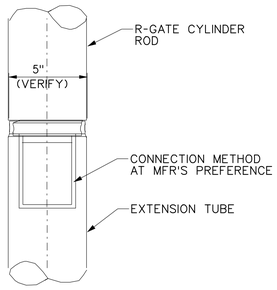

EXTENSION TUBE CONNECTION

NOT TO SCALE

3" = 1' - 0" 1" 0 3" 6" 9" 12"

MATERIAL: SEE SPECIFICATIONS
QUANTITY: 1

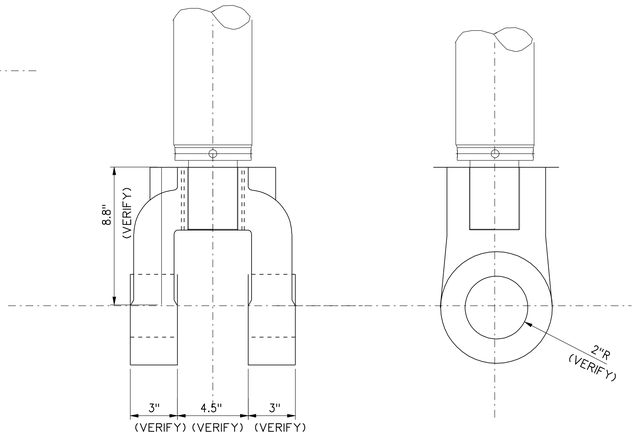

FEMALE ROD CLEVIS

NOT TO SCALE

3" = 1' - 0" 1" 0 3" 6" 9" 12"

MATERIAL: MFR STANDARD
QUANTITY: 1

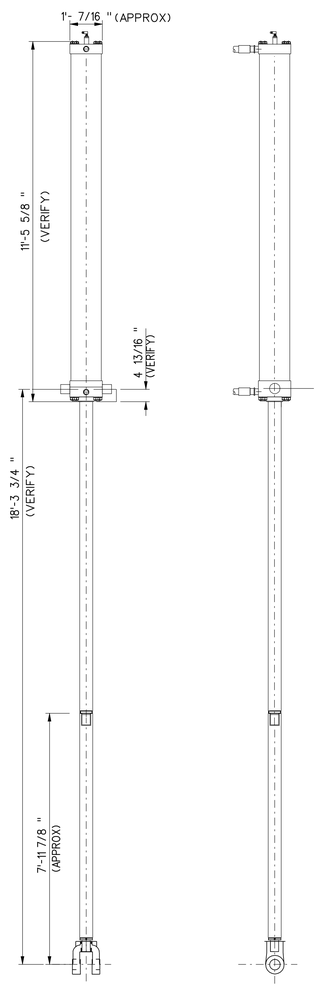

RADIAL GATE ACTUATOR

NOT TO SCALE

½" = 1' - 0" 12"6" 0 1' 2' 3' 4' 5'

MATERIAL: SEE SPECIFICATIONS
QUANTITY: 1

R-1

PRESSURE:	1500 PSI
LOAD CAPABILITY (UP):	43,150 LBS
LOAD CAPABILITY (DOWN):	73,500 LBS
BORE:	7.9 INCHES
ROD:	5.0 INCHES
STROKE:	10 FEET

CYLINDER NOTES:

1. FOR BOTH CYLINDERS, FURNISH WITH MANUFACTUER'S STANDARD PROXIMITY SWITCHES AND CUSTOM INSTALLED IN-LINE LVDT'S; SEE SPEC.

2. RESILIENT SEALS SHALL BE COMPATIBLE WITH HFD TYPE FLUIDS (NO NEOPRENE OR BUNA-N). HYDRAULIC FLUID SHALL BE WATER/GLYCOL MIXTURE. SEE SPECS.

3. TOLERANCES (FOR ACTUATOR COMPONENTS ONLY) SHALL BE TO ISO 8135.

4. SEE GENERAL NOTES ON M-001.

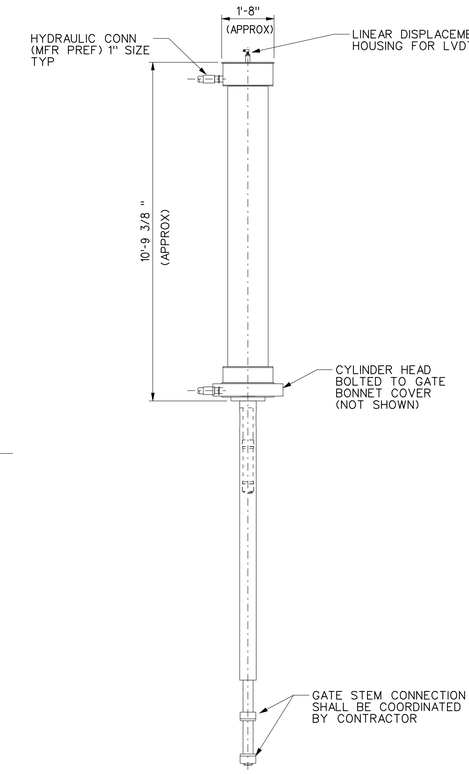

EMERGENCY GATE ACTUATOR

NOT TO SCALE

½" = 1' - 0" 12"6" 0 1' 2' 3' 4' 5'

MATERIAL: SEE SPECIFICATIONS
QUANTITY: 1

E-1

PRESSURE:	1500 PSI
LOAD CAPABILITY (UP):	140,250 LBS
LOAD CAPABILITY (DOWN):	186,950 LBS
BORE:	12.6 INCHES
ROD:	6.3 INCHES
STROKE:	8.5 FEET

US Army Corps of Engineers
Seattle District

Symbol	Description	Appr.	Date
			/ /

U.S.ARMY ENGINEER DISTRICT, SEATTLE
CORPS OF ENGINEERS
SEATTLE, WASHINGTON
Prepared by:

Designed by: DJB
Drawn by: DJB
Checked by:
Date: 16 MAR 06
File: E-56-14-19
Rev.

ADDITIONAL WATER STORAGE PROJECT
HOWARD HANSON DAM
GREEN RIVER WASHINGTON

AWC GATE DETAILS

Plate number: M-504
Sheet of

DATE AND TIME PLOTTED: 07-AUG-2008 12:03
DESIGN FILE: J:\AECDESIGNS\HHAWM-504awc.DGN

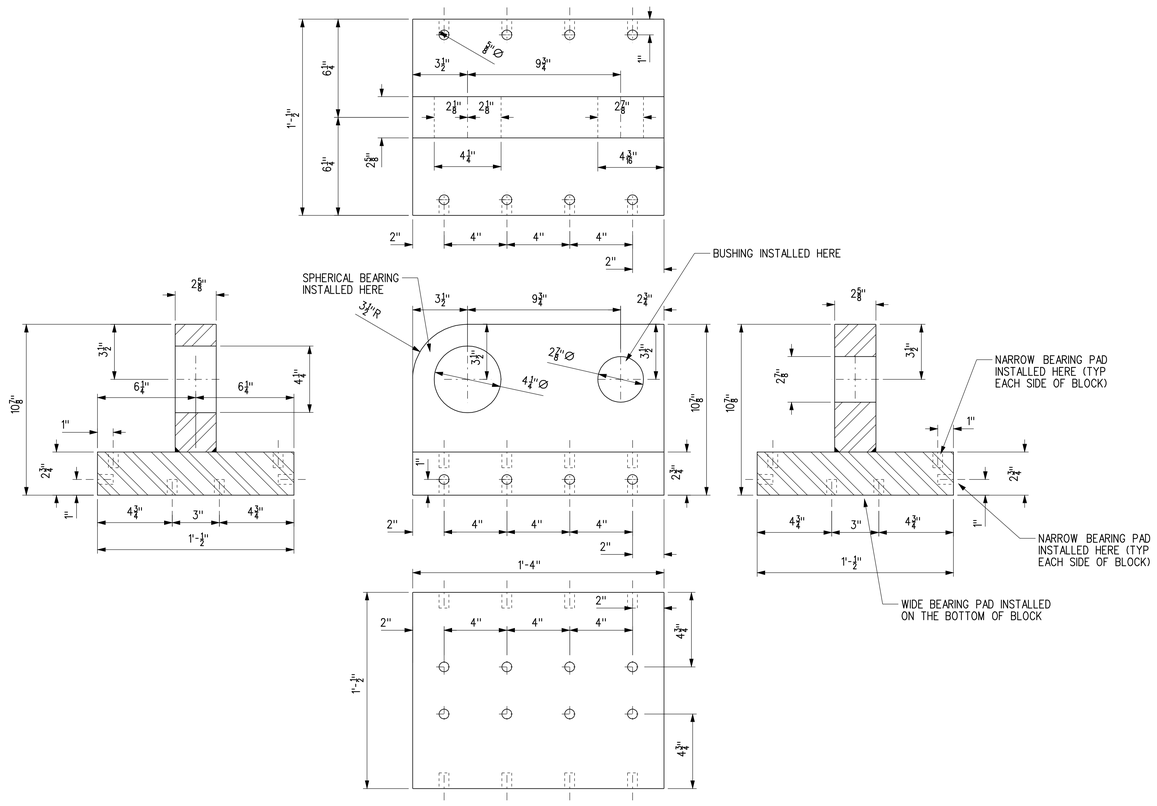

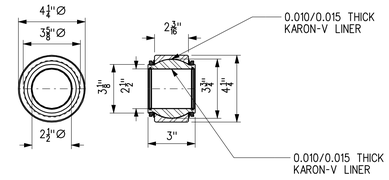

SPHERICAL BEARING

3" = 1' - 0"

MATERIALS:
OUTER RACE: STAINLESS STEEL 17-4PH (UNS S17400), RC 32-37
BALL: STAINLESS STEEL 17-4PH (UNS S17400), RC 40-47
INDUSTRIAL HARD CHROME PLATE SPHERICAL OD OF BALL (0.0002/0.0005 THICK REF)
KARON-V LINER ON OUTER RACE INNER DIAMETER AND ON THE BEARING BORE
SEALS: V-RING LIP SEAL FOR THE SPHERICAL, O-RING FOR THE BORE
QUANTITY: 2 PER IFS

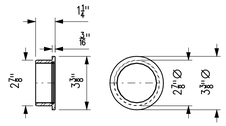

BUSHING

3" = 1' - 0"

MATERIAL: 660 BRONZE (UNS C93200) WITH KARON-V LINER ON THE BUSHING BORE
SEALS: O-RING
QUANTITY: 2 PER IFS LINEAR GUIDE BLOCK

LINEAR GUIDE BLOCK

3" = 1' - 0"

MATERIAL: 18-8 STAINLESS STEEL
QUANTITY: 1 PER IFS

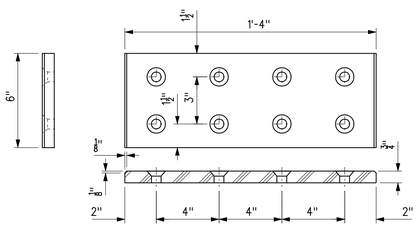

WIDE BEARING PAD

3" = 1' - 0"

MATERIAL: 660 BRONZE (UNS C93200) WITH KARON-V LINER
QUANTITY: 1 PER IFS LINEAR GUIDE BLOCK
FASTENERS: 5/8-INCH FLAT HEAD COUNTERSUNK CAP SCREWS (STAINLESS STEEL)
MATING MATERIAL: STAINLESS STEEL RA 16 OR BETTER

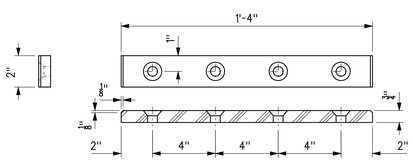

NARROW BEARING PAD

3" = 1' - 0"

MATERIAL: 660 BRONZE (UNS C93200) WITH KARON-V LINER
QUANTITY: 1 PER IFS LINEAR GUIDE BLOCK
FASTENERS: 5/8-INCH FLAT HEAD COUNTERSUNK CAP SCREWS (STAINLESS STEEL)
MATING MATERIAL: STAINLESS STEEL RA 16 OR BETTER

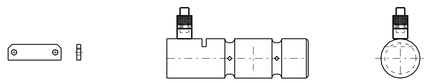

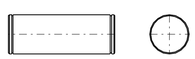

PIN

3" = 1' - 0"

MATERIAL: STAINLESS STEEL 17-4PH (UNS S17400)
QUANTITY: 2 PER IFS

US Army Corps of Engineers
Seattle District

Symbol	Description	Date	Appr.	Description
		/ /		

Designed by: EC
Drawn by: EC
Checked by: X
Date: 16 MAR 06
File #
Rev. E-56-14-19

U.S.ARMY ENGINEER DISTRICT,SEATTLE
CORPS OF ENGINEERS
SEATTLE, WASHINGTON
Prepared by:

ADDITIONAL WATER STORAGE PROJECT
HOWARD HANSON DAM
GREEN RIVER WASHINGTON

IFS DETAILS 1

Plate number:
M-510
Sheet of

FILE: I:\AECDESIGNS\HHAW\Mechanical\HHAWM-510GEN.DGN
DESIGN FILE:
DATE AND TIME PLOTTED: 07-AUG-2008 12:04

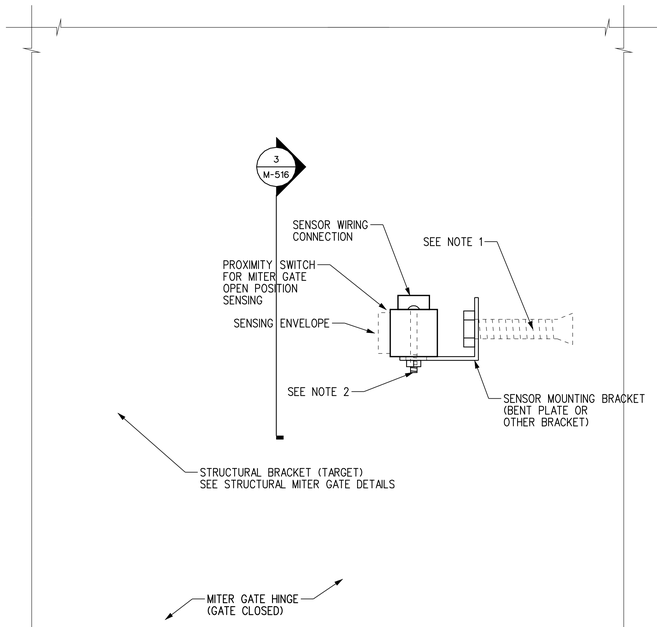

PROXIMITY SWITCH DETAIL (PLAN VIEW) OPEN POSITION SENSING

1 / M-516

6" = 1' - 0" 1" 0 3" 6"

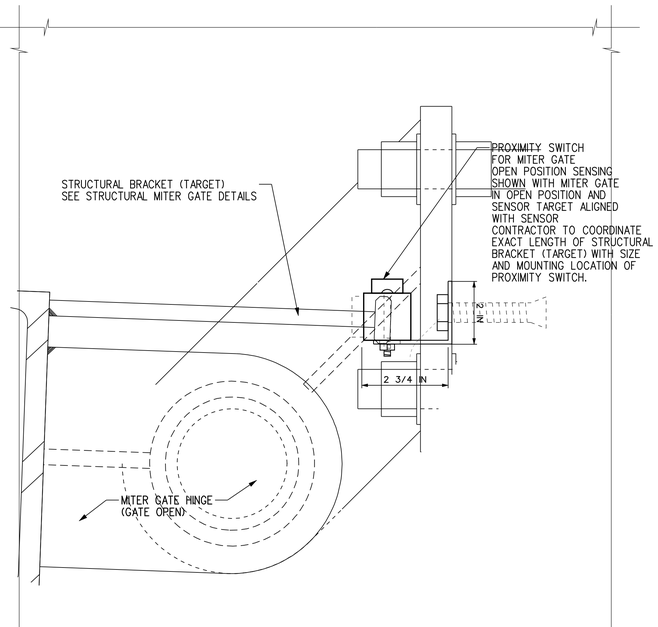

PROXIMITY SWITCH DETAIL (PLAN VIEW) OPEN POSITION SENSING

2 / M-516

6" = 1' - 0" 1" 0 3" 6"

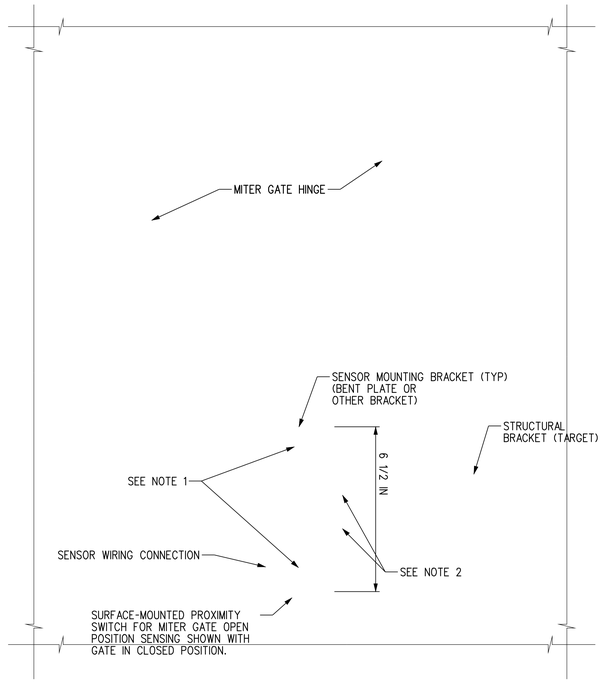

PROXIMITY SWITCH DETAIL (FRONT VIEW OF GATE) OPEN POSITION SENSING

3 / M-516

4" = 1' - 0" 1" 0 3" 6" 9" 12"

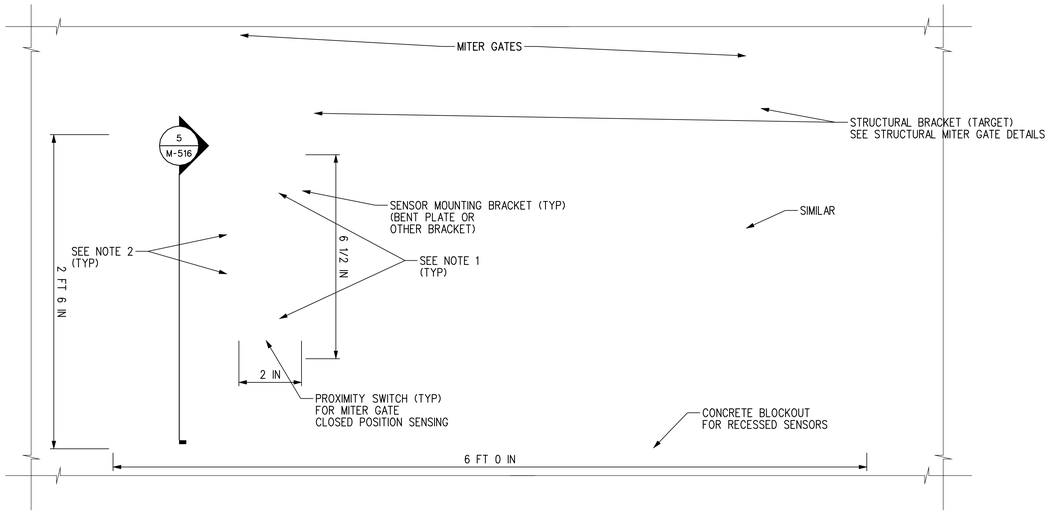

PROXIMITY SWITCH DETAIL (FRONT VIEW OF GATE) CLOSED POSITION SENSING

4 / M-516

4" = 1' - 0" 1" 0 3" 6" 9" 12"

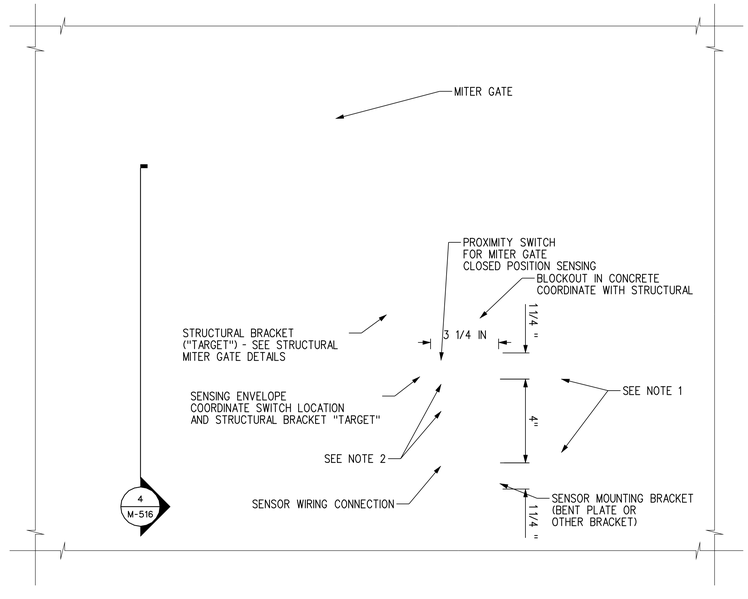

PROXIMITY SWITCH DETAIL (SIDE VIEW OF GATE) CLOSED POSITION SENSING

5 / M-516

4" = 1' - 0" 1" 0 3" 6" 9" 12"

NOTES:

1. CONCRETE DROP-IN ANCHORS (TYP) TO ANCHOR BRACKET TO CONCRETE 5/8 IN DIA, 3 IN EMBEDMENT, RAMSET/REDHEAD TRUBOLT OR EQUAL. 4" SPACING BETWEEN ANCHOR CENTERLINES AS SHOWN IN DETAIL 5 IS TYPICAL FOR ALL DETAILS ON THIS SHEET.

2. THRU-BOLT SENSORS TO BRACKET. COORDINATE BOLT SIZE WITH HOLES IN SENSOR. PROVIDE STANDARD AISC SLOTTED HOLE IN BRACKET AND SECURE BOLT WITH NUT AND LOCK WASHER. SENSOR SHALL BE MOUNTED TO BRACKET IN ACCORDANCE WITH MANUFACTURER'S INSTRUCTIONS (FOR EXAMPLE, BRACKET SHALL NOT PROJECT INTO "SENSING ENVELOPE" OF SENSOR) AND SUCH THAT THE MITER GATE BRACKETS (SENSOR TARGETS) ENTER INTO THE SENSING ENVELOPE BY AT LEAST 1/8 INCH WHEN THE GATES ARE FULLY OPEN OR FULLY CLOSED, BUT DO NOT STRIKE THE FACE OF THE SENSORS.

3. SEE M-514 FOR ADDITIONAL NOTES REGARDING MITER GATES.

US Army Corps of Engineers
Seattle District

Symbol	Description	Date	Appr.	Symbol	Description
		/ /			

Date: 16 MAR 06
File: E-56-14-19
Rev.

Designed by: EC/AMM
Drawn by: EC/AMM
Checked by: X

U.S.ARMY ENGINEER DISTRICT,SEATTLE
CORPS OF ENGINEERS
SEATTLE, WASHINGTON
Prepared by:

ADDITIONAL WATER STORAGE PROJECT
HOWARD HANSON DAM
MITER GATE DETAILS
GREEN RIVER WASHINGTON

Plate number:
M-516
Sheet of

DESIGN FILE: I:\ECDESIGNS\HHAW\Mechanical\HHAWM-516GEN.DGN
DATE AND TIME PLOTTED: 07-AUG-2008 12:04

IFS NUMBER 1

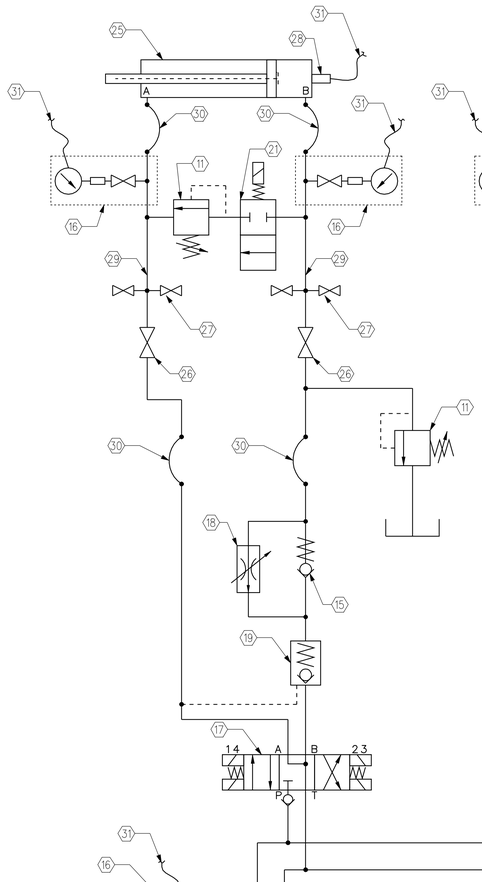

IFS NUMBER 2

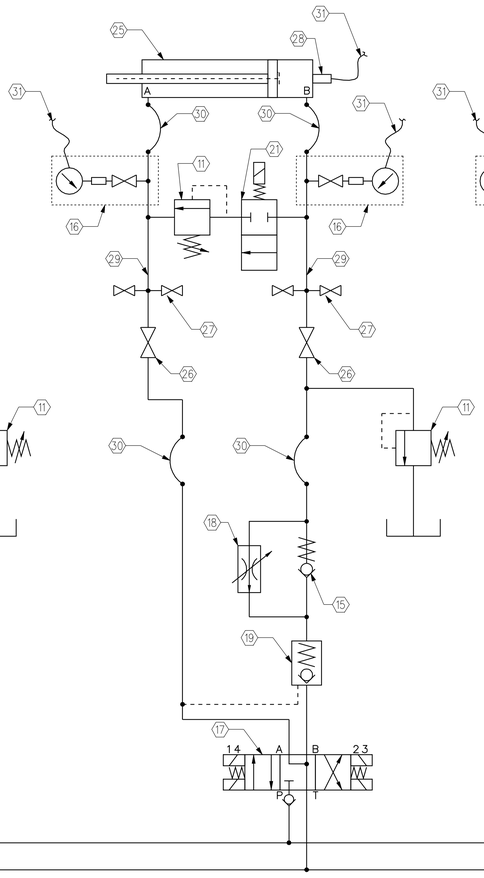

IFS NUMBER 3

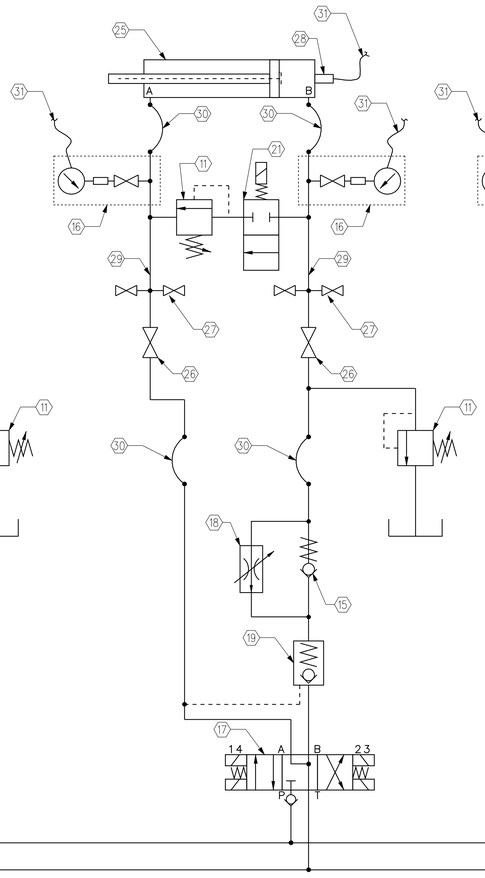

IFS NUMBER 4

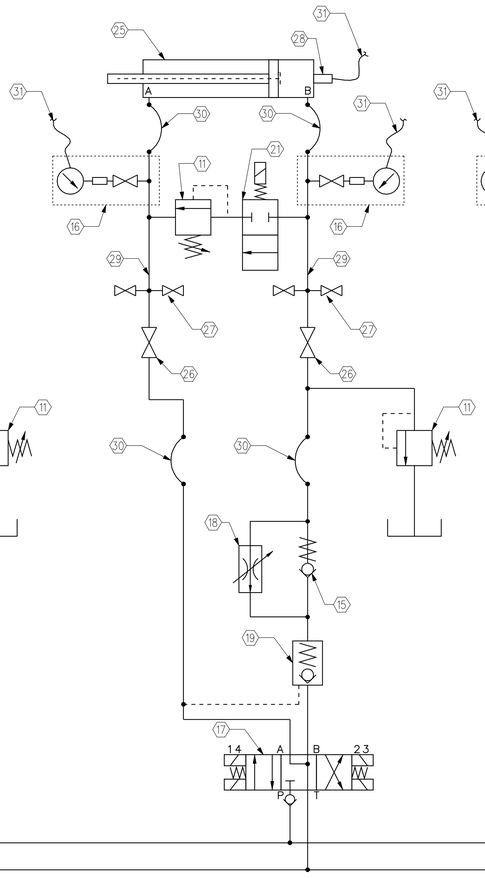

IFS NUMBER 5

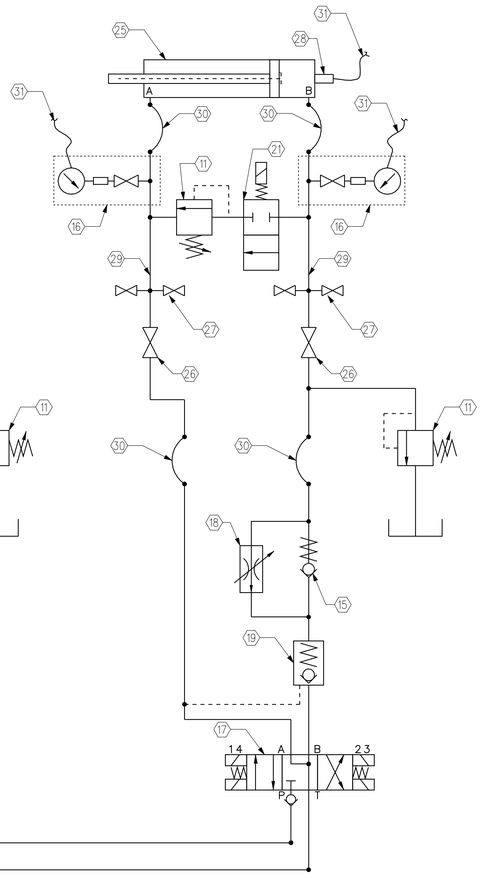

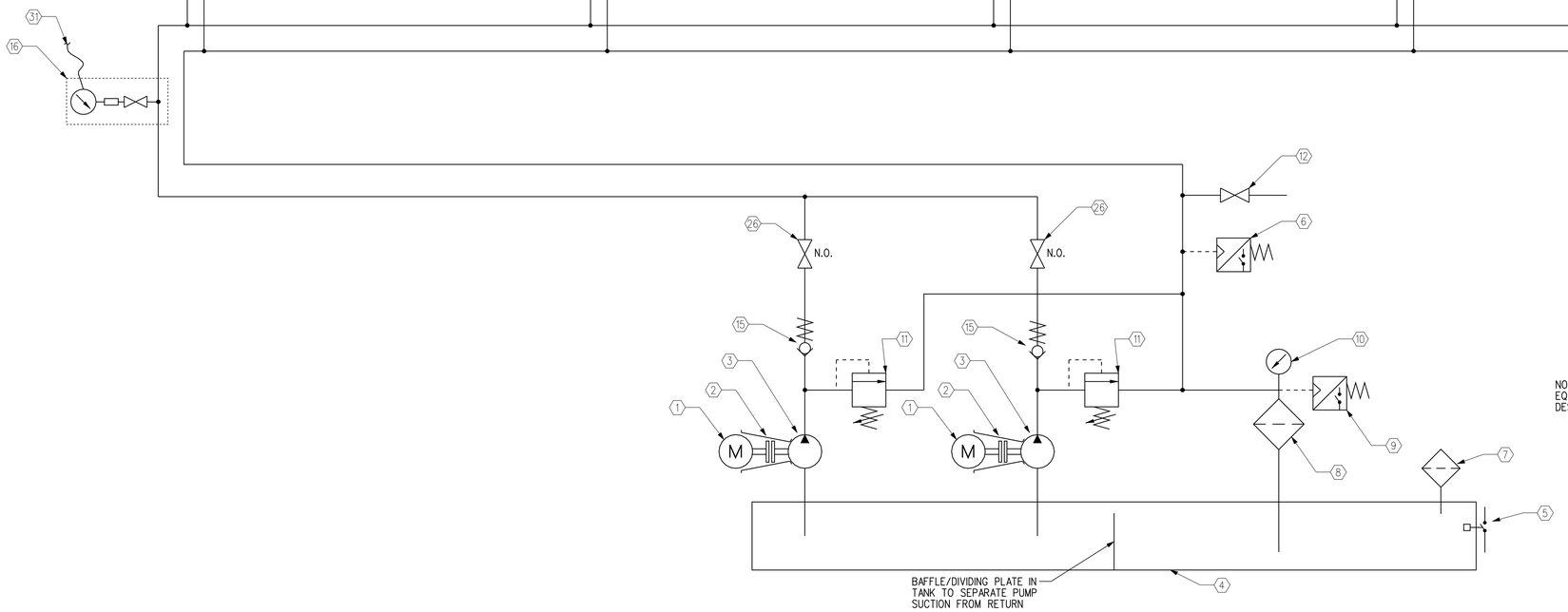

NOTE: SEE M-523 FOR THE EQUIPMENT SCHEDULE AND DESCRIPTION OF OPERATION.

HYDRAULIC SCHEMATIC FOR THE IFS ROTATION ACTUATORS

NTS

US Army Corps of Engineers
Seattle District

Symbol	Description	Appr.	Date
			/ /

Designed by: EC
Drawn by: EC
Checked by:
Prepared by:
U.S.ARMY ENGINEER DISTRICT,SEATTLE
CORPS OF ENGINEERS
SEATTLE, WASHINGTON

Date: 16 MAR 06
File # E-56-14-19
Rev.

ADDITIONAL WATER STORAGE PROJECT
HOWARD HANSON DAM
IFS ACTUATOR
HYDRAULIC SCHEMATIC
GREEN RIVER WASHINGTON

Plate number:
M-522
Sheet of

DATE AND TIME PLOTTED: 07-AUG-2008 12:04
DESIGN FILE: I:\AECDESIGNS\HHAW\Mechanical\HHAWM-522IFS.DGN

FISH COLLECTOR MITER GATE HYDRAULIC SYSTEM SCHEDULE

MARK	ITEM	QUANTITY	DESCRIPTION	LOCATION
1	ELECTRIC MOTOR	2	20 HP TEFC, 1800 RPM, 3 PHASE, 460 V, NEMA DESIGN B	AT HPU
2	FLEXIBLE COUPLING	2	MOUNT MOTOR TO PUMP WITH FLEXIBLE COUPLING AND BELL HOUSING PER PUMP MANUFACTURER'S INSTRUCTIONS	
3	PUMP	2	AXIAL PISTON PUMP, DESIGNED FOR OPERATION WITH TAP WATER. 10.0 TO 10.0 GPM AT 1750 RPM AND 2000 PSI. FULLY WATER LUBRICATED: ALL STAINLESS STEEL CONSTRUCTION. DANFOSS NESSIE PAH-25 OR EQUAL. LOCATE PUMPS BELOW TANK (FLOODED SUCTION).	
4	TANK	1	MINIMUM TANK CAPACITY: 30 GALLONS CORROSION RESISTANT TANK MATERIAL. TANK DRAIN. VISUAL TANK LEVEL MONITORING.	
5	LOW LEVEL SWITCH	1	TANK LOW WATER LEVEL SWITCH (ALARM AND DEACTIVATES MOTOR)	
6	HIGH TEMPERATURE SWITCH	1	HIGH TEMPERATURE (>113° F) SWITCH (ALARM AND DEACTIVATES MOTOR)	
7	BREATHER	1	BREATHER FILTER, 10 MICRON OR FINER	
8	RETURN FILTER	1	20-INCH FILTER ELEMENT/HOUSING, FILTRATION LEVEL OF 10 MICRONS ABSOLUTE WITH BETA-10 VALUE GREATER THAN 5000, OR FINER. PROVIDE 2 SPARE FILTER ELEMENTS.	
9	FILTER ALARM SWITCH	1	FILTER HIGH PRESSURE ALARM SWITCH, SET PRESSURE AS RECOMMENDED BY FILTER MANUFACTURER. ACTIVATION OF SWITCH SHALL DEACTIVATE MOTOR AND SIGNAL ALARM. DO NOT PROVIDE A BYPASS LINE FOR THE FILTER. OPTION: SWITCH MAY BE PART OF A COMBINATION PRESSURE GAUGE/PRESSSURE TRANSMITTER/PRESSURE SWITCH COMPONENT. PRESSURE GAUGE RANGE SHALL BE AT LEAST TWICE THE VALUE OF THE MAXIMUM FILTER PRESSURE DROP (PRESSURE SWITCH SETTING).	
10	PRESSURE GAUGE	1		
11	PRESSURE RELIEF VALVE	8	ADJUSTABLE RELIEF SETTING FROM 363-2030 PSI MAX FLOW 7.93 GPM DANFOSS NESSIE VRH-30 OR EQUAL	
12	FILL BALL VALVE	1	1/2" BALL VALVE FOR WATER FILLING	
13				
15	CHECK VALVE	7	CONICAL POPPET DESIGN: MAX PRESSURE 4351 PSI: OPENING PRESSURE 7.3 PSI MAX FLOW 7.93 GPM, PRESSURE DROP 36.3 PSI AT MAX FLOW DANFOSS NESSIE VCH-30 OR EQUAL	
16	PRESSURE GAUGE	2	COMBINATION DIGITAL PRESSURE GAUGE AND PRESSURE TRANSMITTER (4/20mA OUTPUT TO REMOTE PLC AND/OR DISPLAY). ALL STAINLESS STEEL WETTED PARTS. 0-3000 PSI RANGE. LINE POWERED WITH BATTERY BACKUP. 0.25% FULL SCALE ACCURACY. FIVE DIGIT LCD DISPLAY. ASHCROFT 2274 OR EQUAL. PROVIDE SHUT OFF VALVE AND SNUBBER.	
17	FOUR-WAY, 3-POSITION DIRECTIONAL CONTROL VALVE	5	HAS 4 PILOT-OPERATED SEAT VALVES ELECTRICALLY ACTIVATED BY 4 COILS OPEN CENTER VALVE (A & B TO TANK) MAX PRESSURE 2030 PSI MAX FLOW 7.93 GPM CETOP 3 MOUNTING VALVE SHALL HAVE MANUAL OVERRIDE CAPABILITY DANFOSS NESSIE VDH-30EC-4/3 OR EQUAL	
18	PRESSURE COMPENSATED FLOW CONTROL VALVE	5	MAX PRESSURE AND MAX PRESSURE DROP 2030 PSI MIN PRESSURE DROP 218 PSI MAX FLOW 7.93 GPM NESSIE DANFOSS VDH-30PM OR EQUAL	
19	PILOT OPERATED CHECK VALVE	5	3:1 RATIO MAX PRESSURE 3000 PSI CRACKING PRESSURE 15 PSI NOMINAL FLOW 7.93 GPM OR HIGHER ELWOOD POC OR EQUAL	
20	ACCUMULATOR	1	5-GALLON GAS-CHARGED BLADDER ACCUMULATOR, BOTTOM REPAIRABLE. 3000 PSI RATING. MAX SYSTEM PRESSURE 2000 PSI.	
21	ACCUMULATOR LINE CHARGING VALVE (NC)	1	PILOT-OPERATED 2-WAY, 2-POSITION CONTROL VALVE ELECTRICALLY ACTIVATED BY 1 COIL SEAT VALVE DESIGN MAX PRESSURE 2030 PSI MAX FLOW 7.93 GPM VALVE SHALL HAVE MANUAL OVERRIDE CAPABILITY DANFOSS NESSIE VDH-30E-2/2 OR EQUAL	
22	ACCUMULATOR LINE TO CYLINDER CONNECTION VALVE (NO)	5		
23	ACCUMULATOR ISOLATION VALVE	1	1/2" BALL VALVE WITH LOCKING HANDLE. ALL STAINLESS STEEL. 3000 PSI MIN.	
24	ACCUMULATOR MANUAL BLEED VALVE	1	VALVE FOR CONTROLLED RELEASE OF ACCUMULATOR PRESSURE.	
25	HYDRAULIC CYLINDER	10	ALL STAINLESS STEEL CONSTRUCTION. DESIGNED FOR TAP WATER OPERATION. DESIGNED FOR SUBMERGED OPERATION. ZERO-LEAKAGE PISTON SEALS. INTERMEDIATE TRUNNION MOUNT. BORE = 7 INCH; ROD = 4 INCH; STROKE = 84 INCH INTEGRAL LINEAR POSITION TRANSDUCER (PISTON ROD GUN DRILLED FOR TRANSDUCER SENSING ROD).	AT THE CORRESPONDING GATE ELEVATION
26	ISOLATION VALVE	12	1/2" BALL VALVE WITH LOCKING HANDLE. ALL STAINLESS STEEL. 3000 PSI MIN.	
27	DRAIN/BLEED VALVE	AS REQ'D	PROVIDE VALVES FOR DRAINING SYSTEM AND VENTING AIR.	
28	LINEAR POSITION TRANSDUCER	5	LINEAR POSITION TRANSDUCER USING MAGNETOSTRICTIVE PRINCIPLE. MOUNT SENSOR ON CAP END OF CYLINDER. DRILL CYLINDER ROD TO ACCEPT THE SENSOR ROD. SEE DETAILS SHEETS FOR DIMENSIONS. SENSOR AND CABLES/HARDWARE SUITABLE FOR CONTINUOUS SUBMERGED OPERATION IN 150 FEET OF WATER. CYLINDER SIDE RATED FOR 3000 PSI MIN. SANTEST OR EQUAL.	ONE FOR EACH HYDRAULIC CYLINDER
29	HYDRAULIC TUBING	AS REQ'D	ALL HYDRAULIC TUBING SHALL BE ASTM A269 ANNEALED STAINLESS STEEL. TUBE OUTER DIAMETER: 5/8-INCH MINIMUM TUBE WALL THICKNESS: 0.065-INCH	AS REQ'D

NOTES:

1. ALL COMPONENTS SHALL BE SUITABLE FOR USE WITH EITHER AN ALL TAP WATER SYSTEM OR WITH A WATER-PROPYLENE GLYCOL MIXTURE. ALL MATERIALS SHALL BE CORROSION RESISTANT.

2. HYDRAULIC FLUID SHALL BE A MIXTURE OF FILTERED WATER AND PROPYLENE GLYCOL. PROPYLENE GLYCOL PERCENTAGE SHALL BE NO LESS THAN 30% AND NO GREATER THAN 35% BY WEIGHT.

3. ALL FLUID USED SHALL HAVE A FILTRATION LEVEL OF 10 MICRONS ABSOLUTE WITH BETA-10 VALUE GREATER THAN 5000, OR BETTER.

4. MAXIMUM SYSTEM WORKING PRESSURE = 2000 PSI.

IFS ROTATION ACTUATOR HYDRAULIC SYSTEM OPERATION:

ONE PUMP IS THE PRIMARY PUMP AND THE OTHER IS THE SECONDARY PUMP (BACKUP PUMP). SWITCHOVER SHALL OCCUR ON A WEEKLY BASIS.

ACCUMULATOR OPERATION:

THE ACCUMULATOR IS INTENDED TO MAINTAIN PRESSURE ON THE CAP-END CYLINDER PORTS TO PREVENT IFS DRIFT AWAY FROM THE SCREEN FISHING POSITION. CYLINDER CAP-END PORTS ARE CONNECTED TO/ISOLATED FROM THE ACCUMULATOR PRESSURE BY THE ACCUMULATOR ISOLATION VALVES (NO.22). ANY CYLINDER DRIFT THAT MAY OCCUR IS PREVENTED BY THE ADDITIONAL PRESSURE PROVIDED BY THE ACCUMULATOR. WHEN THE ACCUMULATOR PRESSURE DROPS BELOW THE MINIMUM DESIRED VALUE, THE ACCUMULATOR IS RECHARGED BY RUNNING ONE OF THE PUMPS VIA THE ACCUMULATOR LINE CHARGING VALVE.

US Army Corps of Engineers
Seattle District

Symbol	Description	Date	Appr.	Symbol	Description
		/ /			

Designed by: EC
Drawn by: EC
Checked by:
Prepared by:
Date: 16 MAR 06
File = E-56-14-19
Rev.

U.S.ARMY ENGINEER DISTRICT, SEATTLE
CORPS OF ENGINEERS
SEATTLE, WASHINGTON

ADDITIONAL WATER STORAGE PROJECT
HOWARD HANSON DAM
GREEN RIVER

IFS ACTUATOR HYDRAULIC SCHEDULE

WASHINGTON

Plate number:
M-523
Sheet of

DESIGN FILE: I:\AECDESIGNS\HHAW\Mechanical\HHAWM-523IFS.DGN
DATE AND TIME PLOTTED: 07-AUG-2008 12:05

MITER GATE 1 SOUTH LEAF
MITER GATE 1 NORTH LEAF
MITER GATE 2 SOUTH LEAF
MITER GATE 2 NORTH LEAF
MITER GATE 3 SOUTH LEAF
MITER GATE 3 NORTH LEAF
MITER GATE 4 SOUTH LEAF
MITER GATE 4 NORTH LEAF
MITER GATE 5 SOUTH LEAF
MITER GATE 5 NORTH LEAF

HYDRAULIC HOSE

TO PLC AND/OR REMOTE DISPLAY

BAFFLES TO SEPARATE SUPPLY LINES FROM RETURN LINES AND NORTH SIDE FROM SOUTH SIDE

NOTE: SEE M-533 FOR THE EQUIPMENT SCHEDULE AND DESCRIPTION OF OPERATION.

HYDRAULIC SCHEMATIC FOR THE FISH COLLECTOR MITER GATE ACTUATORS

NTS

US Army Corps of Engineers
Seattle District

Symbol	Description	Date	Appr.	Symbol	Description
		/ /			

Designed by: EC
Drawn by: EC
Checked by:
Prepared by:
Date: 16 MAR 06
File: E-56-14-19
Rev.

U.S. ARMY ENGINEER DISTRICT, SEATTLE
CORPS OF ENGINEERS
SEATTLE, WASHINGTON

ADDITIONAL WATER STORAGE PROJECT
HOWARD HANSON DAM
GREEN RIVER

MITER GATE ACTUATOR HYDRAULIC SCHEMATIC

WASHINGTON

Plate number:
M-532
Sheet of

FILE: I:\AECDESIGNS\HHAWM\Mechanical\HHAWM-532MGA.DGN
DESIGN FILE: I:\AECDESIGNS\HHAWM\Mechanical\HHAWM-532MGA.DGN
DATE AND TIME PLOTTED: 07-AUG-2008 12:05

FISH COLLECTOR MITER GATE HYDRAULIC SYSTEM SCHEDULE

MARK	ITEM	QUANTITY	DESCRIPTION	LOCATION
1n	PRIMARY ELECTRIC MOTOR FOR NORTH GATE LEAF CIRCUIT	1	7.5 HP TEFC, 1800 RPM, 3 PHASE, 460 V, NEMA DESIGN B	AT HPU
1s	PRIMARY ELECTRIC MOTOR FOR SOUTH GATE LEAF CIRCUIT	1		
2	FLEXIBLE COUPLING	2	MOUNT MOTOR TO PUMP WITH FLEXIBLE COUPLING AND BELL HOUSING PER PUMP MANUFACTURER'S INSTRUCTIONS	
3n	PRIMARY PUMP FOR NORTH GATE LEAF CIRCUIT	1	AXIAL PISTON PUMP, DESIGNED FOR OPERATION WITH TAP WATER. 4.0 TO 4.5 GPM AT 1750 RPM AND 2000 PSI. FULLY WATER LUBRICATED; ALL STAINLESS STEEL CONSTRUCTION. DANFOSS NESSIE PAH-10 OR EQUAL. LOCATE PUMPS BELOW TANK (FLOODED SUCTION).	
3s	PRIMARY PUMP FOR SOUTH GATE LEAF CIRCUIT	1		
4	TANK	1	MINIMUM TANK CAPACITY: 30 GALLONS CORROSION RESISTANT TANK MATERIAL. TANK DRAIN. VISUAL TANK LEVEL MONITORING.	
5	LOW LEVEL SWITCH	1	TANK LOW WATER LEVEL SWITCH (ALARM AND DEACTIVATES MOTOR)	
6	HIGH TEMPERATURE SWITCH	2	HIGH TEMPERATURE (>113° F) SWITCH (ALARM AND DEACTIVATES MOTOR)	
7	BREATHER	1	BREATHER FILTER, 10 MICRON OR FINER	
8	RETURN FILTER	2	20-INCH FILTER ELEMENT/HOUSING, FILTRATION LEVEL OF 10 MICRONS ABSOLUTE WITH BETA-10 VALUE GREATER THAN 5000, OR FINER. PROVIDE 4 SPARE FILTER ELEMENTS.	
9	FILTER ALARM SWITCH	2	FILTER HIGH PRESSURE ALARM SWITCH, SET PRESSURE AS RECOMMENDED BY FILTER MANUFACTURER. ACTIVATION OF SWITCH SHALL DEACTIVATE MOTOR AND SIGNAL ALARM. DO NOT PROVIDE A BYPASS LINE FOR THE FILTER. OPTION: SWITCH MAY BE PART OF A COMBINATION PRESSURE GAUGE/PRESSURE TRANSMITTER/PRESSURE SWITCH COMPONENT. PRESSURE GAUGE RANGE SHALL BE AT LEAST TWICE THE VALUE OF THE MAXIMUM FILTER PRESSURE DROP (PRESSURE SWITCH SETTING).	
10	PRESSURE GAUGE	2		
11	PRESSURE RELIEF VALVE	13	ADJUSTABLE RELIEF SETTING FROM 363-2030 PSI MAX FLOW 7.93 GPM DANFOSS NESSIE VRH-30 OR EQUAL	
12	FILL BALL VALVE	2	1/2" BALL VALVE FOR WATER FILLING	
13	PUMP SWITCHOVER VALVE (NC)	1	PILOT-OPERATED 2-WAY, 2-POSITION CONTROL VALVE ELECTRICALLY ACTIVATED BY 1 COIL SEAT VALVE DESIGN MAX PRESSURE 2030 PSI MAX FLOW 7.93 GPM VALVE SHALL HAVE MANUAL OVERRIDE CAPABILITY DANFOSS NESSIE VDH-30E-2/2 OR EQUAL	
14n	NORTH PUMP ISOLATION VALVE (NO)	1		
14s	SOUTH PUMP ISOLATION VALVE (NO)	1		
15	CHECK VALVE	12	CONICAL POPPET DESIGN: MAX PRESSURE 4351 PSI; OPENING PRESSURE 7.3 PSI MAX FLOW 7.93 GPM, PRESSURE DROP 36.3 PSI AT MAX FLOW DANFOSS NESSIE VCH-30 OR EQUAL	
16	PRESSURE GAUGE	3	COMBINATION DIGITAL PRESSURE GAUGE AND PRESSURE TRANSMITTER (4/20mA OUTPUT TO REMOTE PLC AND/OR DISPLAY). ALL STAINLESS STEEL WETTED PARTS. 0-3000 PSI RANGE. LINE POWERED WITH BATTERY BACKUP. 0.25% FULL SCALE ACCURACY. FIVE DIGIT LCD DISPLAY. ASHCROFT 2274 OR EQUAL. PROVIDE SHUT OFF VALVE AND SNUBBER.	
17	FOUR-WAY, 3-POSITION DIRECTIONAL CONTROL VALVE	10	HAS 4 PILOT-OPERATED SEAT VALVES ELECTRICALLY ACTIVATED BY 4 COILS OPEN CENTER VALVE (A & B TO TANK) MAX PRESSURE 2030 PSI MAX FLOW 7.93 GPM CETOP 3 MOUNTING VALVE SHALL HAVE MANUAL OVERRIDE CAPABILITY DANFOSS NESSIE VDH-30EC-4/3 OR EQUAL	
18	PRESSURE COMPENSATED FLOW CONTROL VALVE	10	MAX PRESSURE AND MAX PRESSURE DROP 2030 PSI MIN PRESSURE DROP 218 PSI MAX FLOW 7.93 GPM NESSIE DANFOSS VOH-30PM OR EQUAL	
19	PILOT OPERATED CHECK VALVE	10	3:1 RATIO MAX PRESSURE 3000 PSI CRACKING PRESSURE 15 PSI NOMINAL FLOW 7.93 GPM OR HIGHER ELWOOD POC OR EQUAL	
20	ACCUMULATOR	1	5-GALLON GAS-CHARGED BLADDER ACCUMULATOR, BOTTOM REPAIRABLE. 3000 PSI RATING. MAX SYSTEM PRESSURE 2000 PSI.	
21n	ACCUMULATOR LINE CHARGING VALVE FROM NORTH LINE (NC)	1	PILOT-OPERATED 2-WAY, 2-POSITION CONTROL VALVE ELECTRICALLY ACTIVATED BY 1 COIL SEAT VALVE DESIGN MAX PRESSURE 2030 PSI MAX FLOW 7.93 GPM VALVE SHALL HAVE MANUAL OVERRIDE CAPABILITY DANFOSS NESSIE VDH-30E-2/2 OR EQUAL	
21s	ACCUMULATOR LINE CHARGING VALVE FROM SOUTH LINE (NC)	1		
22	ACCUMULATOR LINE TO CYLINDER CONNECTION VALVE (NO)	10		
23	ACCUMULATOR ISOLATION VALVE	1	1/2" BALL VALVE WITH LOCKING HANDLE. ALL STAINLESS STEEL. 3000 PSI MIN.	
24	ACCUMULATOR MANUAL BLEED VALVE	1	VALVE FOR CONTROLLED RELEASE OF ACCUMULATOR PRESSURE.	
25	HYDRAULIC CYLINDER	10	ALL STAINLESS STEEL CONSTRUCTION. DESIGNED FOR TAP WATER OPERATION. DESIGNED FOR SUBMERGED OPERATION. ZERO-LEAKAGE PISTON SEALS. EXTRA-LONG PISTON. EXTRA-LONG ROD BEARING. BORE = 7 INCH; ROD = 4 INCH; STROKE = SEE DETAILS SPHERICAL BEARINGS IN ROD EYE AND IN CAP MOUNT EYE (SEE DETAILS)	AT THE CORRESPONDING GATE ELEVATION
26	ISOLATION VALVE	20	1/2" BALL VALVE WITH LOCKING HANDLE. ALL STAINLESS STEEL. 3000 PSI MIN.	
27	DRAIN/BLEED VALVE	AS REQ'D	PROVIDE VALVES FOR DRAINING SYSTEM AND VENTING AIR.	
28	HYDRAULIC TUBING	AS REQ'D	ALL HYDRAULIC TUBING SHALL BE ASTM A269 ANNEALED STAINLESS STEEL. TUBE OUTER DIAMETER: 5/8-INCH MINIMUM TUBE WALL THICKNESS: 0.065-INCH	AS REQ'D

NOTES:

1. ALL COMPONENTS SHALL BE SUITABLE FOR USE WITH EITHER AN ALL TAP WATER SYSTEM OR WITH A WATER-PROPYLENE GLYCOL MIXTURE. ALL MATERIALS SHALL BE CORROSION RESISTANT.

2. HYDRAULIC FLUID SHALL BE A MIXTURE OF FILTERED WATER AND PROPYLENE GLYCOL. PROPYLENE GLYCOL PERCENTAGE SHALL BE NO LESS THAN 30% AND NO GREATER THAN 35% BY WEIGHT.

3. ALL FLUID USED SHALL HAVE A FILTRATION LEVEL OF 10 MICRONS ABSOLUTE WITH BETA-10 VALUE GREATER THAN 5000, OR BETTER.

4. MAXIMUM SYSTEM WORKING PRESSURE = 2000 PSI.

MITER GATE HYDRAULIC SYSTEM OPERATION:

THERE ARE TWO HYDRAULIC PUMP CIRCUITS: ONE CIRCUIT FOR THE NORTH GATE LEAVES AND ANOTHER CIRCUIT FOR THE SOUTH GATE LEAVES. NORMALLY, THE NORTH PUMP WILL OPERATE THE NORTH GATE LEAF, AND THE SOUTH PUMP WILL OPERATE THE SOUTH GATE LEAF.

BECAUSE THE GATE LEAVES ARE NOT FULLY SYMMETRICAL, THEY OPEN AND CLOSE WITH STAGGERED OPERATION. WHEN THE GATES ARE BEING OPENED, THE NORTH GATE STARTS TO OPEN BEFORE THE SOUTH GATE (NORTH PUMP STARTS 5 SECONDS BEFORE THE SOUTH PUMP). WHEN THE GATES ARE BEING CLOSED, THE SOUTH GATE STARTS TO CLOSE BEFORE THE NORTH GATE (SOUTH PUMP STARTS 5 SECONDS BEFORE THE NORTH PUMP).

BACKUP OPERATING MODE: ONE PUMP CAN BE USED TO OPERATE BOTH GATE LEAF CIRCUITS BY INTERCONNECTING THE CIRCUITS AT THE PUMP SWITCHOVER VALVE. EITHER OPERATE ONE GATE LEAF AT A TIME OR OPERATE BOTH GATE LEAVES TOGETHER AT HALF SPEED. DIRECTIONAL CONTROL VALVE OPERATION MUST STILL BE STAGGERED SUCH THAT THE NORTH GATE OPENS FIRST AND THE SOUTH GATE CLOSES FIRST.

ACCUMULATOR OPERATION:

THE ACCUMULATOR IS INTENDED TO MAINTAIN PRESSURE ON THE A-SIDE CYLINDER PORTS TO ENSURE THAT THE GATES REMAIN CLOSED UNDER PRESSURE. CYLINDER A-PORTS ARE CONNECTED TO/ISOLATED FROM THE ACCUMULATOR PRESSURE BY THE ACCUMULATOR ISOLATION VALVES (NO.22). ANY CYLINDER DRIFT THAT MAY OCCUR IS PREVENTED BY THE ADDITIONAL PRESSURE PROVIDED BY THE ACCUMULATOR. WHEN THE ACCUMULATOR PRESSURE DROPS BELOW THE MINIMUM DESIRED VALUE, THE ACCUMULATOR IS RECHARGED BY RUNNING ONE OF THE PUMPS VIA THE CORRESPONDING ACCUMULATOR LINE CHARGING VALVE.

US Army Corps of Engineers
Seattle District

Symbol	Description	Date	Appr.	Symbol	Description
		/ /			

Designed by: EC
Drawn by: EC
Checked by:
Prepared by:
Date: 16 MAR 06
File: E-56-14-19
Rev.

U.S.ARMY ENGINEER DISTRICT, SEATTLE
CORPS OF ENGINEERS
SEATTLE, WASHINGTON

ADDITIONAL WATER STORAGE PROJECT
HOWARD HANSON DAM
MITER GATE ACTUATOR HYDRAULIC SCHEDULE
GREEN RIVER WASHINGTON

Plate number:
M-533
Sheet of

DATE AND TIME PLOTTED: 07-AUG-2008 12:05
DESIGN FILE: J:\AECDESIGNS\HHAW\Mechanical\HHAWM-533MGA.DGN

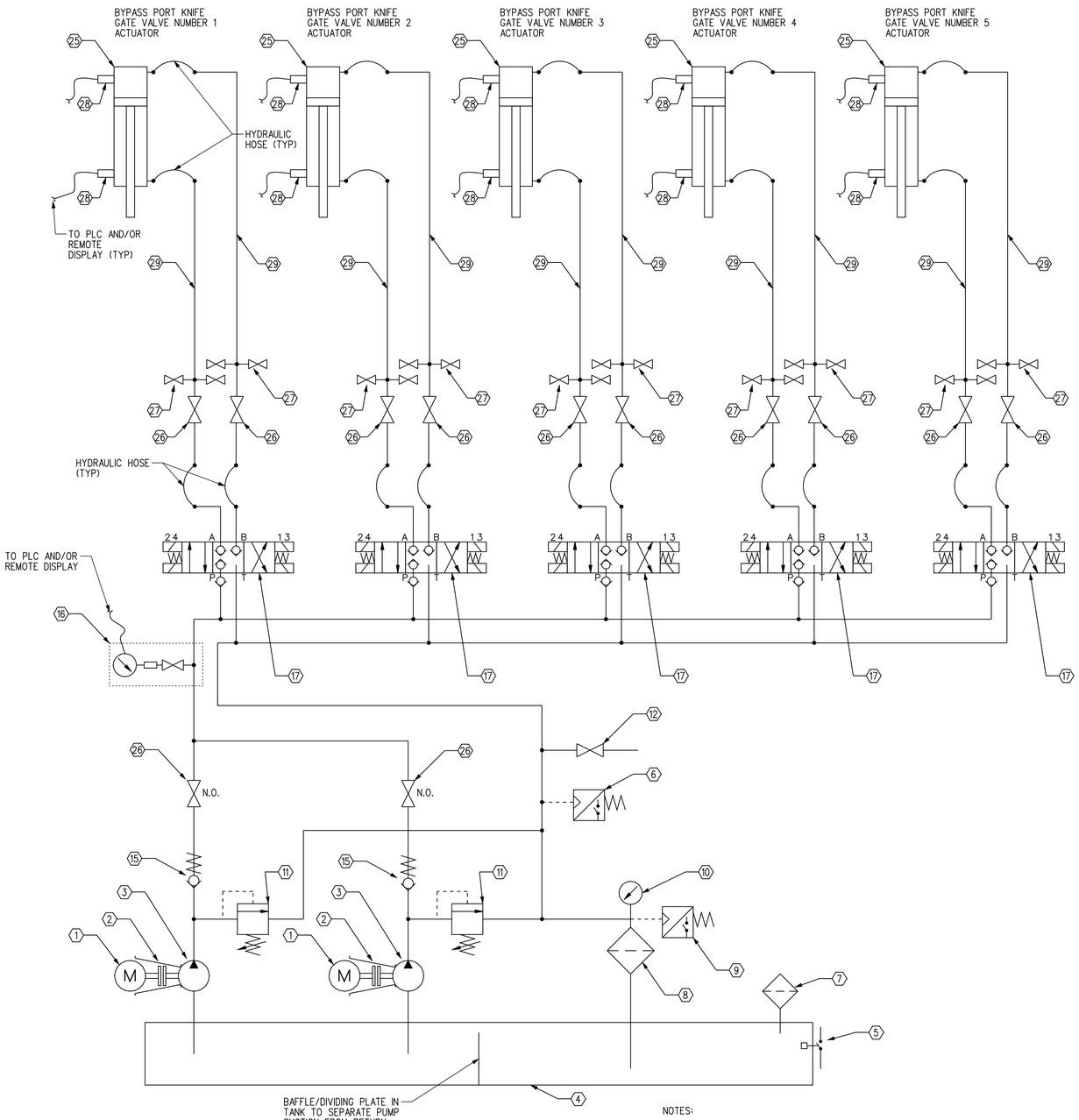

FISH WELL BYPASS PORT VALVE HYDRAULIC SYSTEM SCHEDULE

MARK	ITEM	QUANTITY	DESCRIPTION	LOCATION
1	ELECTRIC MOTOR	2	7.5 HP TEFC, 1800 RPM, 3 PHASE, 460 V, NEMA DESIGN B	AT HPU
2	FLEXIBLE COUPLING	2	MOUNT MOTOR TO PUMP WITH FLEXIBLE COUPLING AND BELL HOUSING PER PUMP MANUFACTURER'S INSTRUCTIONS	
3	PUMP	2	AXIAL PISTON PUMP, DESIGNED FOR OPERATION WITH TAP WATER. 4.0 TO 4.5 GPM AT 1750 RPM AND 2000 PSI. FULLY WATER LUBRICATED: ALL STAINLESS STEEL CONSTRUCTION. DANFOSS NESSIE PAH-10 OR EQUAL. LOCATE PUMPS BELOW TANK (FLOODED SUCTION).	
4	TANK	1	MINIMUM TANK CAPACITY: 12 GALLONS CORROSION RESISTANT TANK MATERIAL. TANK DRAIN. VISUAL TANK LEVEL MONITORING.	
5	LOW LEVEL SWITCH	1	TANK LOW WATER LEVEL SWITCH (ALARM AND DEACTIVATES MOTOR)	
6	HIGH TEMPERATURE SWITCH	2	HIGH TEMPERATURE (>113° F) SWITCH (ALARM AND DEACTIVATES MOTOR)	
7	BREATHER	1	BREATHER FILTER, 10 MICRON OR FINER	
8	RETURN FILTER	1	20-INCH FILTER ELEMENT/HOUSING, FILTRATION LEVEL OF 10 MICRONS ABSOLUTE WITH BETA-10 VALUE GREATER THAN 5000, OR FINER. PROVIDE 2 SPARE FILTER ELEMENTS.	
9	FILTER ALARM SWITCH	1	FILTER HIGH PRESSURE ALARM SWITCH, SET PRESSURE AS RECOMMENDED BY FILTER MANUFACTURER. ACTIVATION OF SWITCH SHALL DEACTIVATE MOTOR AND SIGNAL ALARM. DO NOT PROVIDE A BYPASS LINE FOR THE FILTER. OPTION: SWITCH MAY BE PART OF A COMBINATION PRESSURE GAUGE/PRESSSURE TRANSMITTER/PRESSURE SWITCH COMPONENT. PRESSURE GAUGE RANGE SHALL BE AT LEAST TWICE THE VALUE OF THE MAXIMUM FILTER PRESSURE DROP (PRESSURE SWITCH SETTING).	
10	PRESSURE GAUGE	1		
11	PRESSURE RELIEF VALVE	2	ADJUSTABLE RELIEF SETTING FROM 363-2030 PSI MAX FLOW 7.93 GPM DANFOSS NESSIE VRH-30 OR EQUAL	
12	FILL BALL VALVE	1	1/2" BALL VALVE FOR WATER FILLING	
15	CHECK VALVE	2	CONICAL POPPET DESIGN: MAX PRESSURE 4351 PSI: OPENING PRESSURE 7.3 PSI MAX FLOW 7.93 GPM, PRESSURE DROP 36.3 PSI AT MAX FLOW DANFOSS NESSIE VCH-30 OR EQUAL	
16	PRESSURE GAUGE	1	COMBINATION DIGITAL PRESSURE GAUGE AND PRESSURE TRANSMITTER (4/20mA OUTPUT TO REMOTE PLC AND/OR DISPLAY). ALL STAINLESS STEEL WETTED PARTS. 0-3000 PSI RANGE. LINE POWERED WITH BATTERY BACKUP. 0.25% FULL SCALE ACCURACY. FIVE DIGIT LCD DISPLAY. ASHCROFT 2274 OR EQUAL. PROVIDE SHUT OFF VALVE AND SNUBBER.	
17	FOUR-WAY, 3-POSITION DIRECTIONAL CONTROL VALVE	5	HAS 4 PILOT-OPERATED SEAT VALVES ELECTRICALLY ACTIVATED BY 4 COILS CLOSED CENTER VALVE MAX PRESSURE 2030 PSI MAX FLOW 7.93 GPM CETOP 3 MOUNTING VALVE SHALL HAVE MANUAL OVERRIDE CAPABILITY DANFOSS NESSIE VDH-30EC-4/3 OR EQUAL	
25	HYDRAULIC CYLINDER	5	ALL STAINLESS STEEL CONSTRUCTION. DESIGNED FOR TAP WATER OPERATION. DESIGNED FOR SUBMERGED OPERATION. ZERO-LEAKAGE PISTON SEALS. RATED FOR 2000 PSI. CONFIRM DESIGN LOAD, DIMENSIONS, AND MOUNTING WITH VALVE MANUFACTURER. DESIGN FOR VALVE OPERATION AT 10 PSI PRESSURE DIFFERENTIAL. NOMINAL SIZE (CONTRACTOR TO VERIFY): BORE = 3.25 INCH: ROD = 1.375 INCH: STROKE = 30 INCH	AT THE CORRESPONDING VALVE ELEVATION
26	ISOLATION VALVE	12	BALL VALVE WITH LOCKING HANDLE. 5/8-INCH OR LARGER VALVE SIZE. ALL STAINLESS STEEL. 3000 PSI MIN.	AS REQ'D
27	DRAIN/BLEED VALVE	AS REQ'D	PROVIDE VALVES FOR DRAINING SYSTEM AND VENTING AIR.	
28	CYLINDER POSITION SWITCH	10	CYLINDER OPEN AND CLOSED POSITION SENSORS (PROXIMITY SWITCH) AND CABLES/HARDWARE SUITABLE FOR CONTINUOUS SUBMERGED OPERATION IN 150 FEET OF WATER. CYLINDER SIDE RATED FOR 3000 PSI MIN. GO SWITCH STROKE-TO-GO WITH SUBSEA SUBMERSIBLE CAPABILITY OR EQUAL.	AT THE CORRESPONDING VALVE ELEVATION
29	HYDRAULIC TUBING	AS REQ'D	ALL HYDRAULIC TUBING SHALL BE ASTM A269 ANNEALED STAINLESS STEEL. TUBE OUTER DIAMETER: 5/8-INCH MINIMUM TUBE WALL THICKNESS: 0.065-INCH	AS REQ'D

NOTES:

1. ALL COMPONENTS SHALL BE SUITABLE FOR USE WITH EITHER AN ALL TAP WATER SYSTEM OR WITH A WATER-PROPYLENE GLYCOL MIXTURE. ALL MATERIALS SHALL BE CORROSION RESISTANT.

2. HYDRAULIC FLUID SHALL BE A MIXTURE OF FILTERED WATER AND PROPYLENE GLYCOL. PROPYLENE GLYCOL PERCENTAGE SHALL BE NO LESS THAN 30% AND NO GREATER THAN 35% BY WEIGHT.

3. ALL FLUID USED SHALL HAVE A FILTRATION LEVEL OF 10 MICRONS ABSOLUTE WITH BETA-10 VALUE GREATER THAN 5000, OR BETTER.

4. MAXIMUM SYSTEM WORKING PRESSURE = 2000 PSI.

5. ONE PUMP IS THE PRIMARY PUMP AND THE OTHER PUMP IS THE SECONDARY PUMP (BACKUP PUMP). SWITCHOVER SHALL OCCUR ON A WEEKLY BASIS.

HYDRAULIC SCHEMATIC FOR THE FISH WELL BYPASS PORT KNIFE GATE VALVE ACTUATORS

NTS

US Army Corps of Engineers
Seattle District

Symbol	Description	Appr.	Date
			/ /

Designed by: EC
Drawn by: EC
Checked by:
Date: 16 MAR 06
File: E-56-14-19
Rev.

U.S.ARMY ENGINEER DISTRICT, SEATTLE
CORPS OF ENGINEERS
SEATTLE, WASHINGTON
Prepared by:

ADDITIONAL WATER STORAGE PROJECT
HOWARD HANSON DAM

BYPASS PORT VALVE HYDRAULIC SCHEMATIC

GREEN RIVER WASHINGTON

Plate number:
M-542
Sheet of

DESIGN FILE: I:\AECDESIGNS\HHAW\Mechanical\HHAWM-542BSC.DGN
DATE AND TIME PLOTTED: 07-AUG-2008 12:06

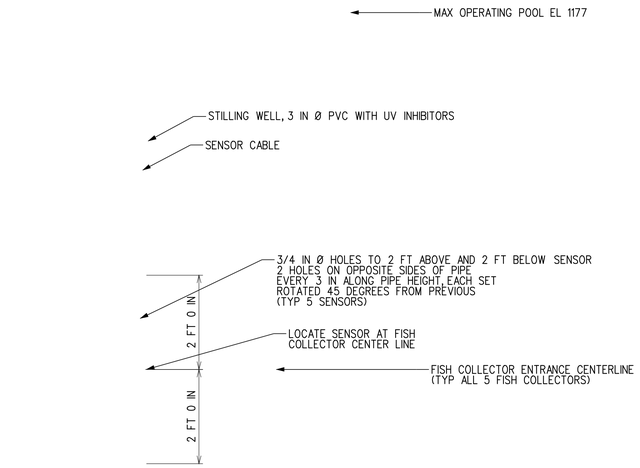

1 TEMP SENSOR STILLING WELL DETAIL – ELEV

3/4" = 1' - 0"

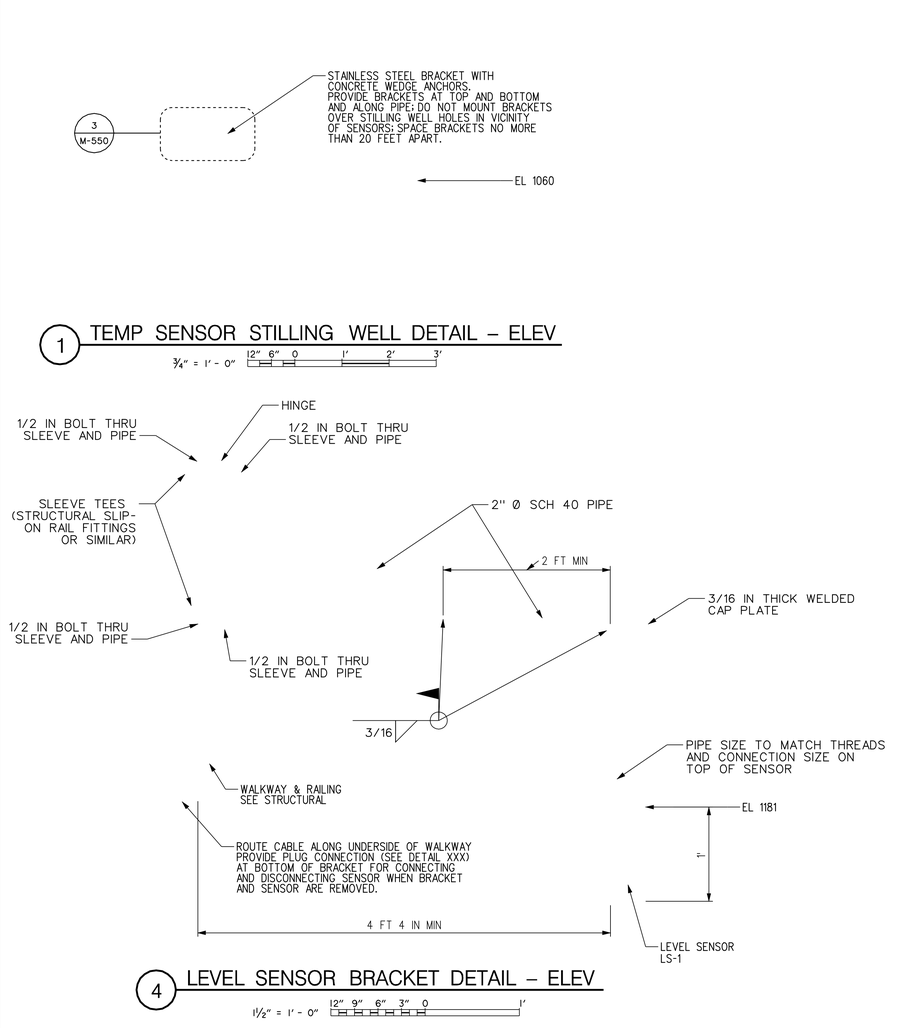

4 LEVEL SENSOR BRACKET DETAIL – ELEV

1½" = 1' - 0"

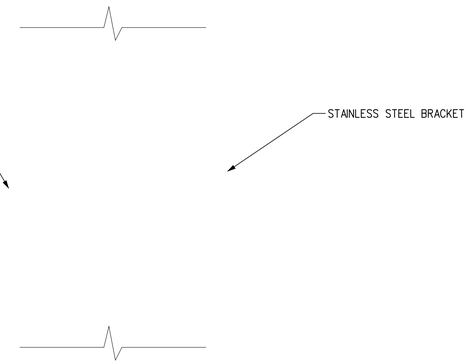

3 MOUNTING BRACKET DETAIL – PLAN

6" = 1' - 0"

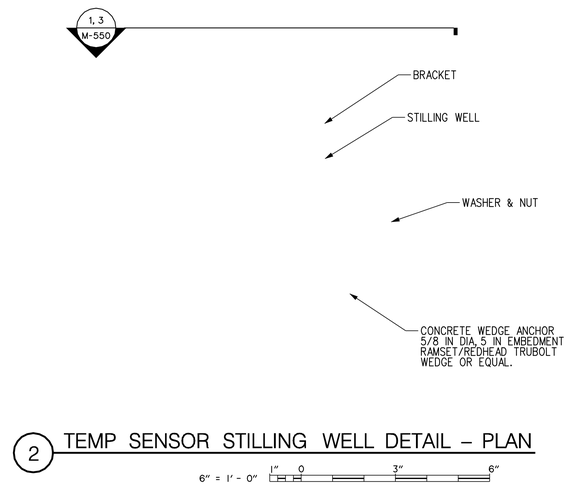

2 TEMP SENSOR STILLING WELL DETAIL – PLAN

6" = 1' - 0"

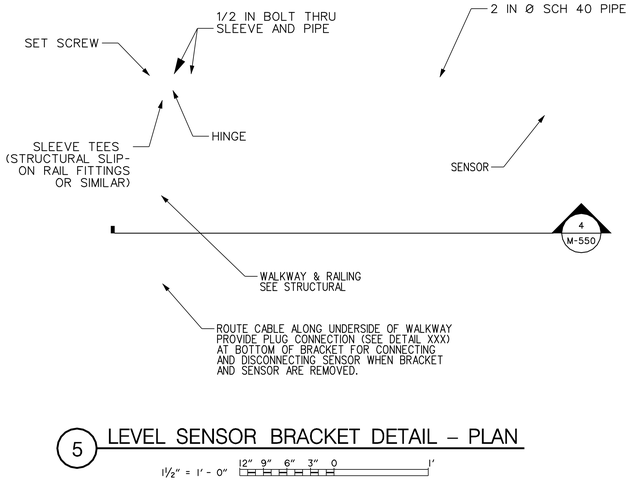

5 LEVEL SENSOR BRACKET DETAIL – PLAN

1½" = 1' - 0"

US Army Corps of Engineers
Seattle District

Symbol	Description	Date	Appr.	Symbol	Description
		/ /			

U.S.ARMY ENGINEER DISTRICT,SEATTLE
CORPS OF ENGINEERS
SEATTLE, WASHINGTON
Prepared by:

Designed by: AMM
Drawn by: AMM
Checked by: X
Date: 16 MAR 06
File: E-56-14-19
Rev.

ADDITIONAL WATER STORAGE PROJECT
HOWARD HANSON DAM
GREEN RIVER WASHINGTON

INSTRUMENTATION DETAILS

Plate number:
M-550
Sheet of

DATE AND TIME PLOTTED: 07-AUG-2008 12:06
DESIGN FILE: J:\AECDESIGNS\HHAW\Mechanical\HHAWM-550DET.DGN

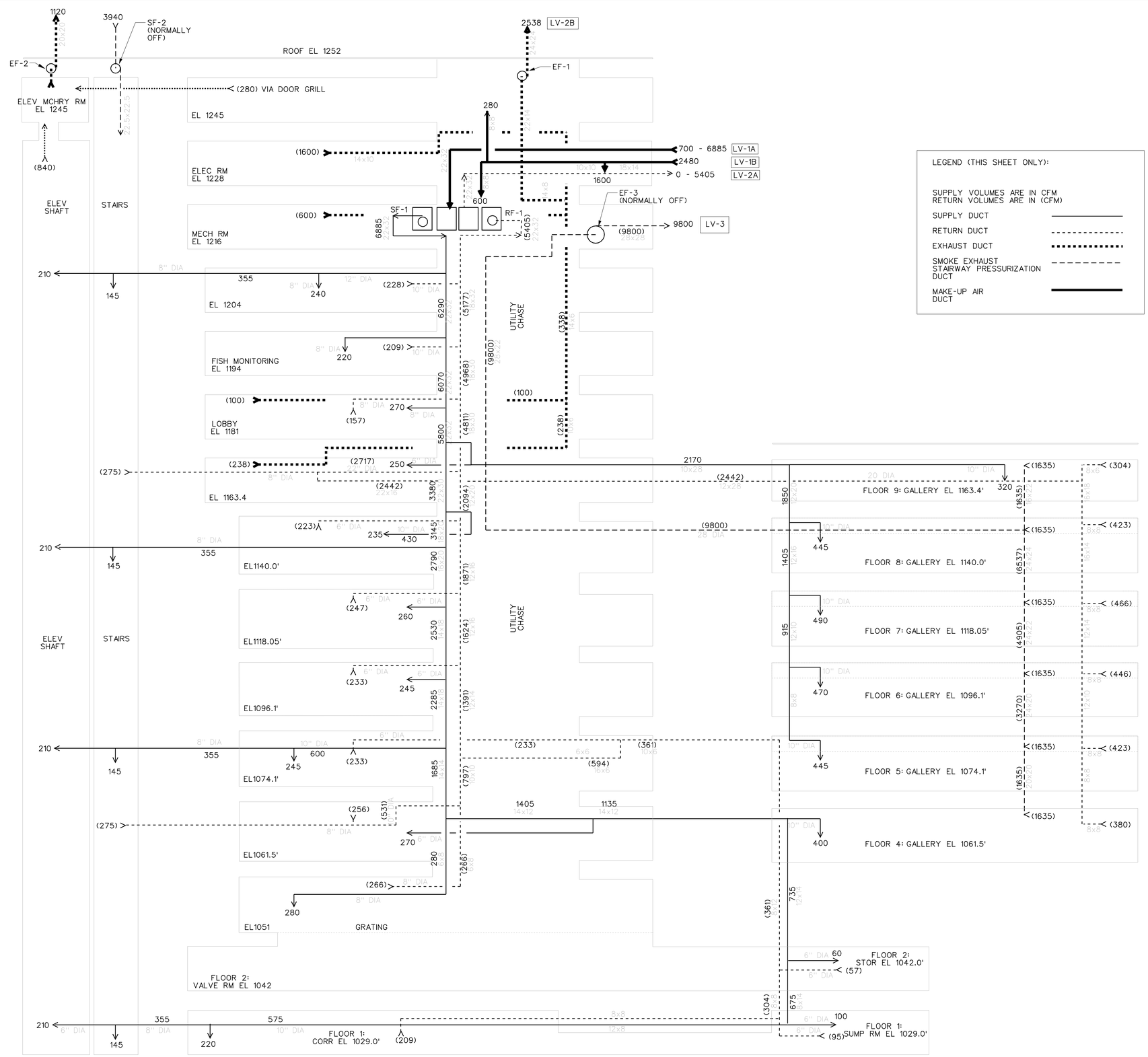

LEGEND (THIS SHEET ONLY):

SUPPLY VOLUMES ARE IN CFM
RETURN VOLUMES ARE IN (CFM)

- SUPPLY DUCT
- RETURN DUCT
- EXHAUST DUCT
- SMOKE EXHAUST STAIRWAY PRESSURIZATION DUCT
- MAKE-UP AIR DUCT

HVAC FLOW BALANCING DIAGRAM

NOT TO SCALE

US Army Corps of Engineers
Seattle District

Symbol	Description	Appr.	Symbol	Description	Date
					/ /

Date: 16 MAR 06
File: E-56-14-19
Rev.

Designed by: DJB
Drawn by: DJB
Checked by:

U.S.ARMY ENGINEER DISTRICT SEATTLE
CORPS OF ENGINEERS
SEATTLE, WASHINGTON
Prepared by:

ADDITIONAL WATER STORAGE PROJECT
HOWARD HANSON DAM
GREEN RIVER WASHINGTON

HVAC SCHEMATIC

Plate number:
M-560
Sheet of

DESIGN FILE: I:\AECDESIGNS\HHAW\Mechanical\HHAWM-560s01.DGN
DATE AND TIME PLOTTED: 07-AUG-2008 12:06

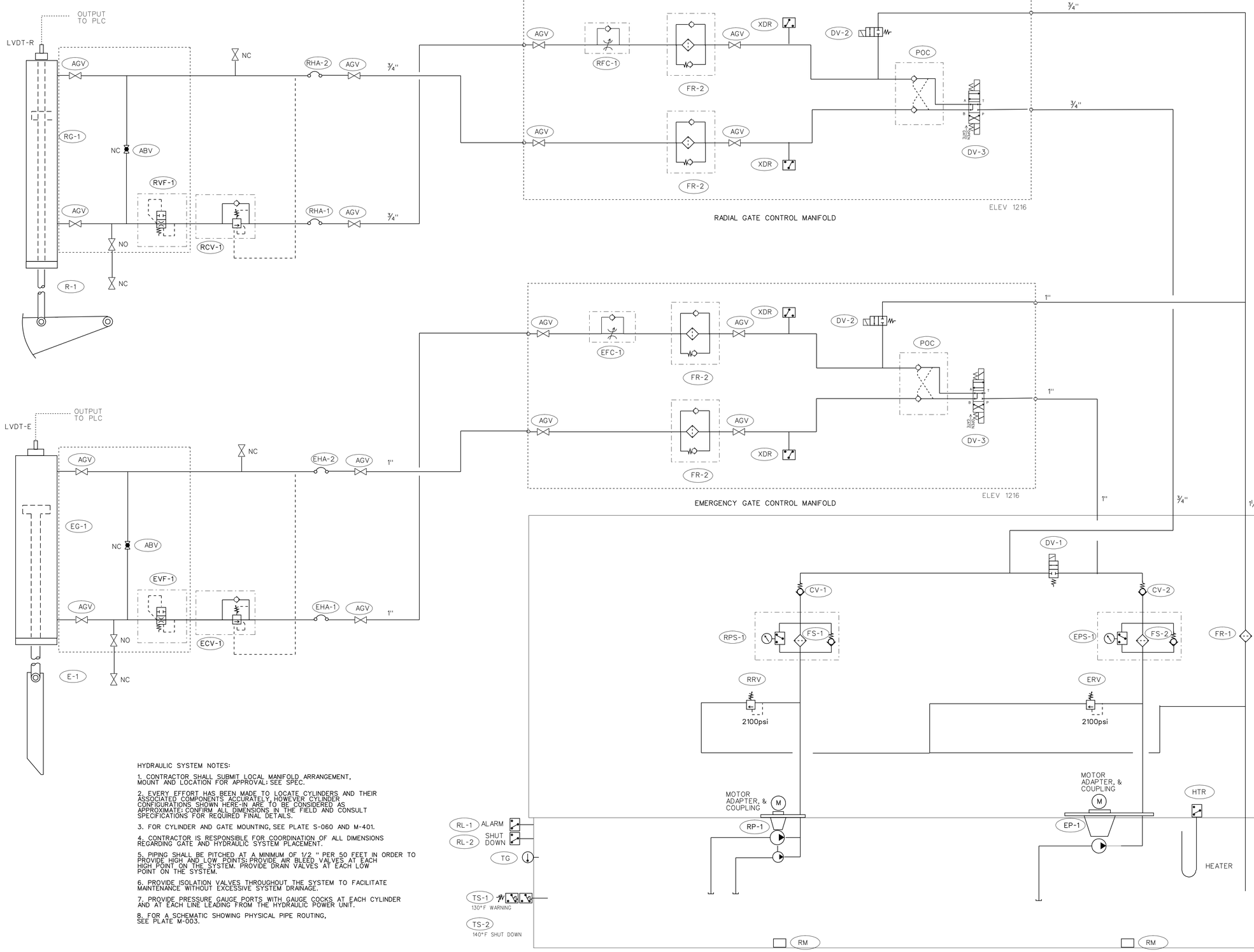

HYDRAULIC SYSTEM NOTES:

1. CONTRACTOR SHALL SUBMIT LOCAL MANIFOLD ARRANGEMENT, MOUNT AND LOCATION FOR APPROVAL; SEE SPEC.

2. EVERY EFFORT HAS BEEN MADE TO LOCATE CYLINDERS AND THEIR ASSOCIATED COMPONENTS ACCURATELY, HOWEVER CYLINDER CONFIGURATIONS SHOWN HERE-IN ARE TO BE CONSIDERED AS APPROXIMATE; CONFIRM ALL DIMENSIONS IN THE FIELD AND CONSULT SPECIFICATIONS FOR REQUIRED FINAL DETAILS.

3. FOR CYLINDER AND GATE MOUNTING, SEE PLATE S-060 AND M-401.

4. CONTRACTOR IS RESPONSIBLE FOR COORDINATION OF ALL DIMENSIONS REGARDING GATE AND HYDRAULIC SYSTEM PLACEMENT.

5. PIPING SHALL BE PITCHED AT A MINIMUM OF 1/2 " PER 50 FEET IN ORDER TO PROVIDE HIGH AND LOW POINTS; PROVIDE AIR BLEED VALVES AT EACH HIGH POINT ON THE SYSTEM. PROVIDE DRAIN VALVES AT EACH LOW POINT ON THE SYSTEM.

6. PROVIDE ISOLATION VALVES THROUGHOUT THE SYSTEM TO FACILITATE MAINTENANCE WITHOUT EXCESSIVE SYSTEM DRAINAGE.

7. PROVIDE PRESSURE GAUGE PORTS WITH GAUGE COCKS AT EACH CYLINDER AND AT EACH LINE LEADING FROM THE HYDRAULIC POWER UNIT.

8. FOR A SCHEMATIC SHOWING PHYSICAL PIPE ROUTING, SEE PLATE M-003.

AWC HYDRAULIC SCHEMATIC

NOT TO SCALE

US Army Corps of Engineers
Seattle District

Symbol	Description	Date	Appr.	Symbol	Description
		/ /			

Designed by: DJB
Drawn by: DJB
Checked by:
Date: 16 MAR 06
File #: E-56-14-19
Rev.

U.S.ARMY ENGINEER DISTRICT,SEATTLE
CORPS OF ENGINEERS
SEATTLE, WASHINGTON
Prepared by:

ADDITIONAL WATER STORAGE PROJECT
HOWARD HANSON DAM
GREEN RIVER WASHINGTON

AWC HYDRAULIC SCHEMATIC

Plate number: M-561
Sheet of

DATE AND TIME PLOTTED: 07-AUG-2008 12:07
DESIGN FILE: J:\AECDESIGNS\HHAWM\Mechanical\HHAWM-561s02.DGN

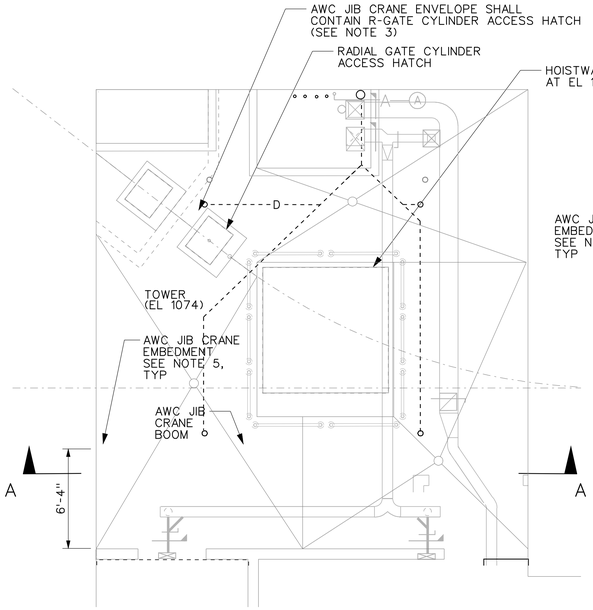

AWC GATE JIB CRANE PLAN

1/4" = 1'-0" 5' 0 5'

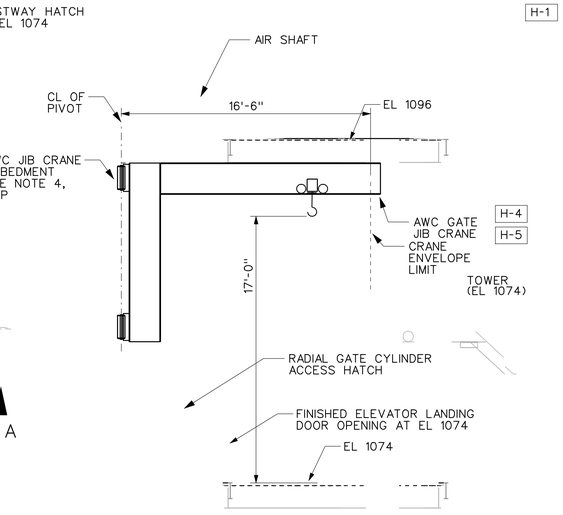

AWC GATE JIB ELEV "A–A"

NOT TO SCALE

A M-102

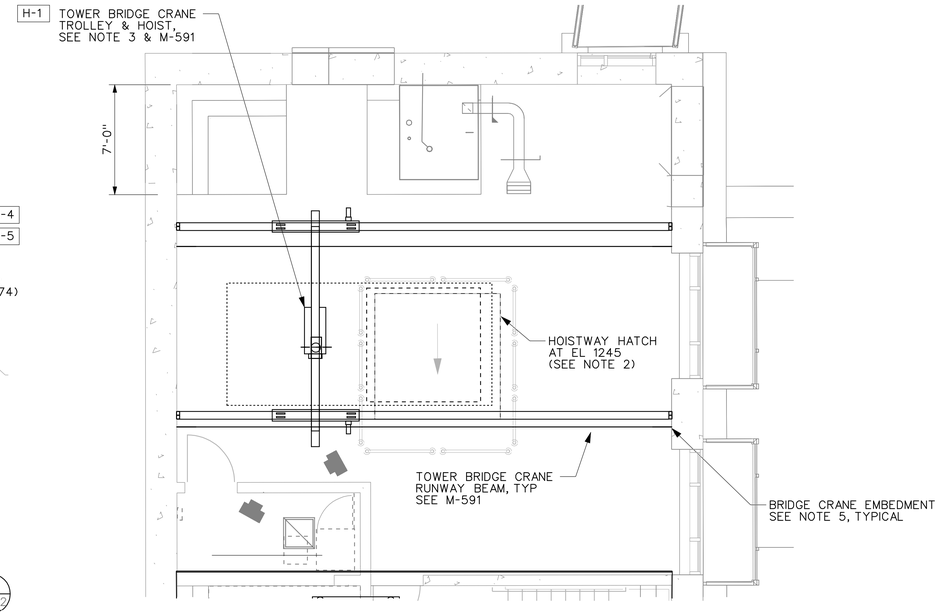

TOWER BRIDGE CRANE PLAN

1/4" = 1'-0" 5' 0 5'

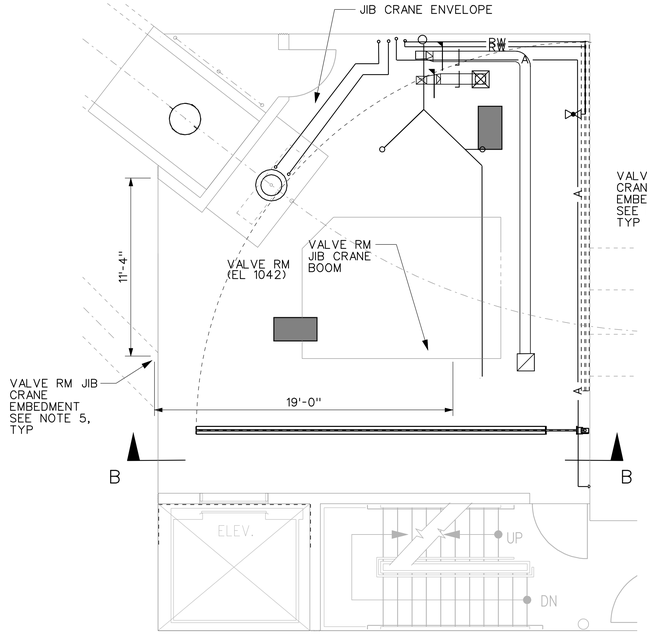

VALVE RM JIB CRANE PLAN

1/4" = 1'-0" 5' 0 5'

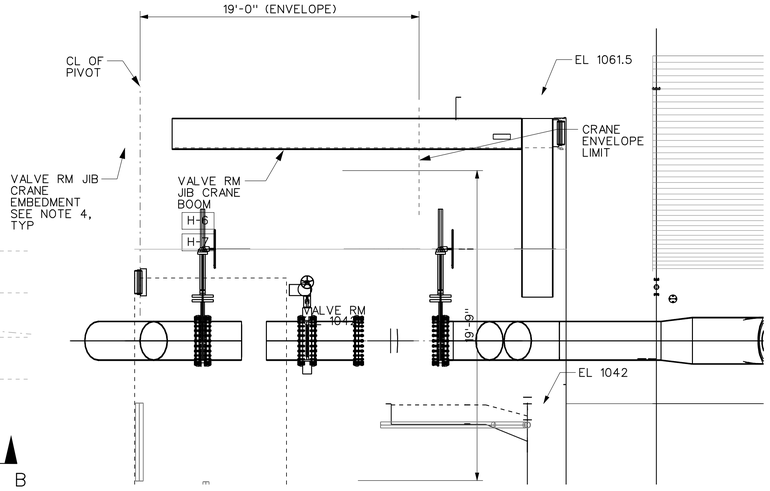

VALVE RM JIB CRANE ELEV "B–B"

NOTES:

1. FOR CRANE HOIST SCHEDULE, SEE M-606.

2. TOWER BRIDGE CRANE SHALL BE WALL MOUNTED AT EL 1245 LEVEL; SEE M-591. CRANE ENVELOPE SHALL BE LOCATED SO AS TO GAIN MAXIMUM COVERAGE OVER THE ROOF HATCH AS INDICATED.

3. TOWER BRIDGE TROLLEY H-1 SHALL BE PROVIDED WITH ADEQUATE ROPE AND DRUM STORAGE FOR 120 FEET OF 1/2" NON ROTATING WIRE ROPE.

4. AWC GATE JIB CRANE ENVELOPE SHALL BE COORDINATED WITH FINAL AWC GATE ACTUATING CYLINDER LOCATIONS. ENVELOPE SHALL BE LOCATED SO AS TO GAIN OPTIMUM ACCESS AROUND THE HYDRAULIC CYLINDERS AS INDICATED.

5. CONTRACTOR TO DESIGN ALL ANCHORAGE EMBEDMENTS PER MANUFACTURER RECOMMENDATION. SEE SPECS.

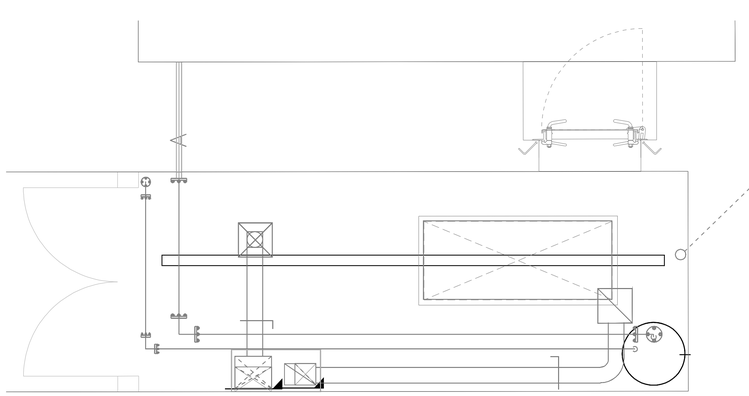

MONORAIL BEAM PLAN

NOT TO SCALE

C M-102

US Army Corps of Engineers
Seattle District

Symbol	Description	Appr.	Date
			/ /

U.S.ARMY ENGINEER DISTRICT,SEATTLE
CORPS OF ENGINEERS
SEATTLE, WASHINGTON

Prepared by:
Designed by: DJB
Drawn by:
Checked by: DJB

Date: 16 MAR 06
File: E-56-14-19
Rev.

ADDITIONAL WATER STORAGE PROJECT
HOWARD HANSON DAM
GREEN RIVER WASHINGTON

MISC CRANE DETAILS I

Plate number:
M-590
Sheet of

DESIGN FILE: I:\AECDESIGNS\HHAW\Mechanical\HHAWM-590rg1.DGN
DATE AND TIME PLOTTED: 07-AUG-2008 12:08

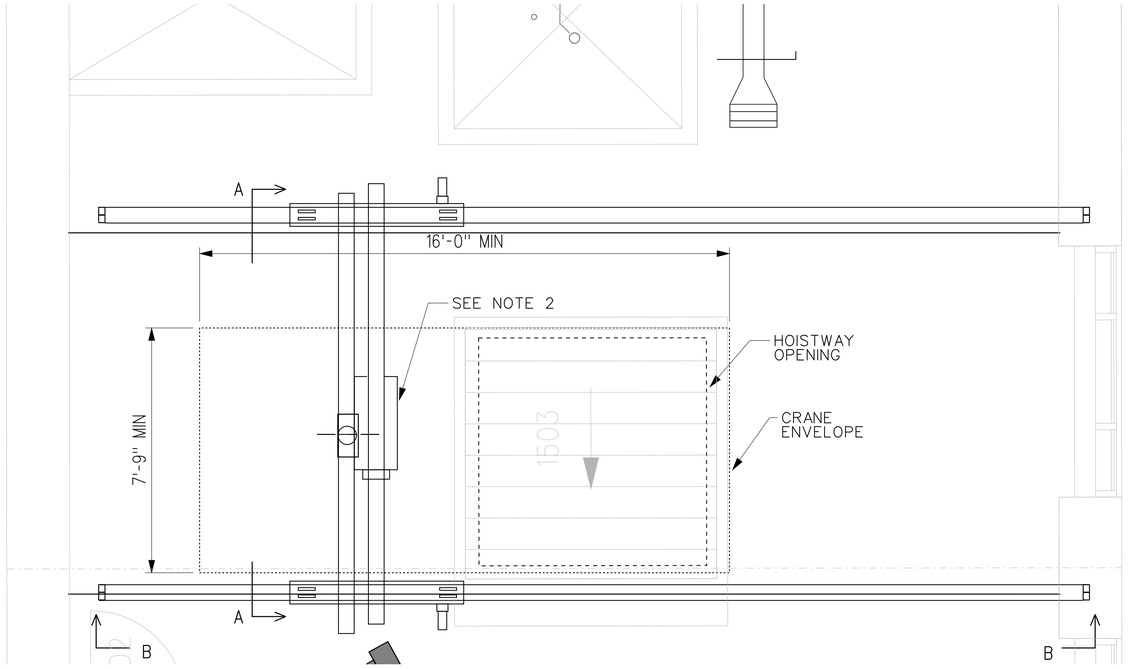

TOWER BRIDGE CRANE PLAN

NOT TO SCALE

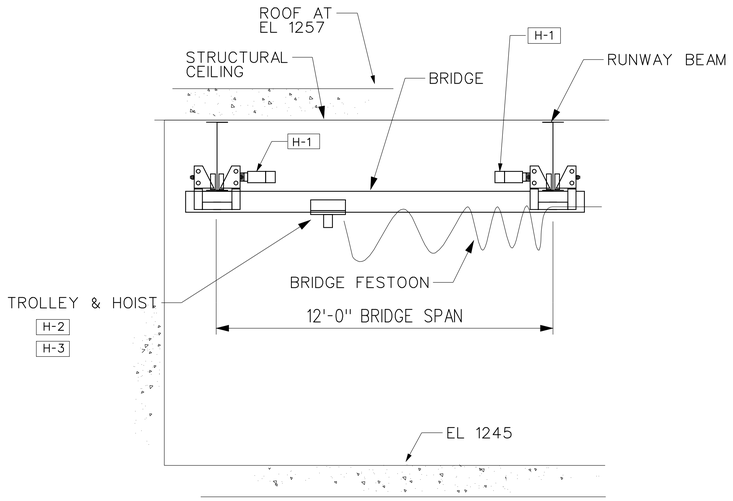

TOWER BRIDGE CRANE – SECTION "A–A"

NOT TO SCALE

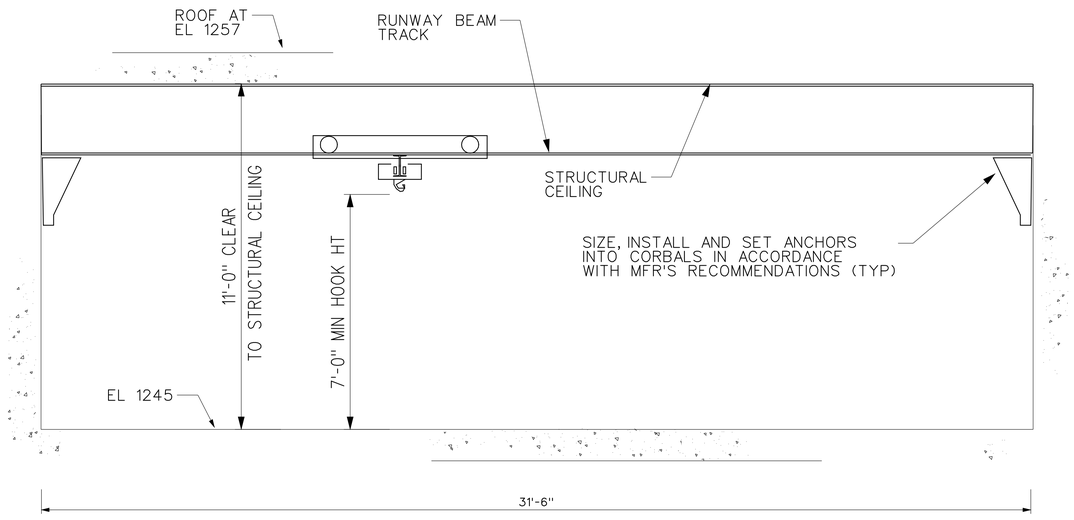

TOWER BRIDGE CRANE – SECTION "B–B"

NOT TO SCALE

US Army Corps of Engineers
Seattle District

Symbol	Description	Date	Appr.	Symbol	Description
		/ /			

Designed by: DJB
Drawn by: DJB
Checked by:
Date: 16 MAR 06
File • E-56-14-19
Rev.

U.S.ARMY ENGINEER DISTRICT,SEATTLE
CORPS OF ENGINEERS
SEATTLE, WASHINGTON
Prepared by:

ADDITIONAL WATER STORAGE PROJECT
HOWARD HANSON DAM
GREEN RIVER WASHINGTON

MISC. CRANE DETAILS II

Plate number:
M-591
Sheet of

DATE AND TIME PLOTTED: 07-AUG-2008 12:09
DESIGN FILE: J:\AECDESIGNS\HHAW\Mechanical\HHAWM-591rg2.DGN

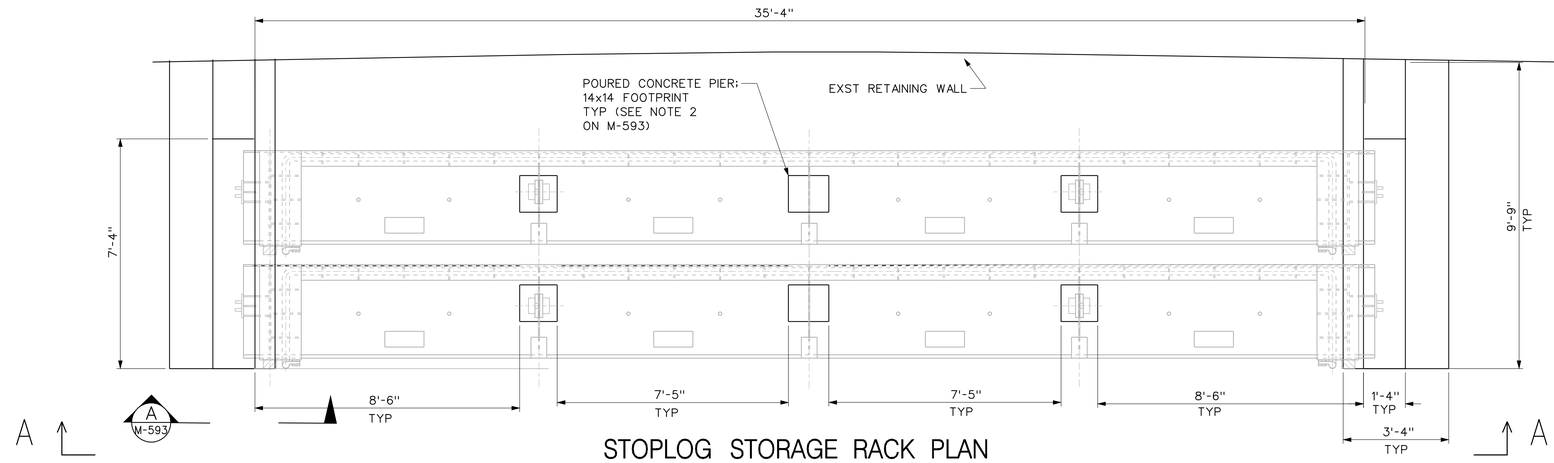

STOPLOG STORAGE RACK PLAN

NOT TO SCALE

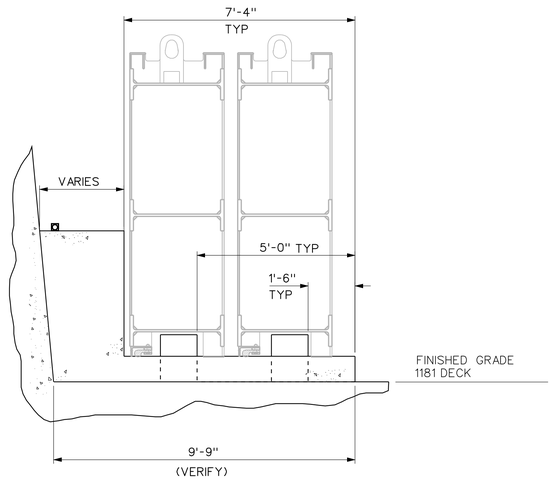

STOPLOG STORAGE RACK – SECTION "B–B"

NOT TO SCALE

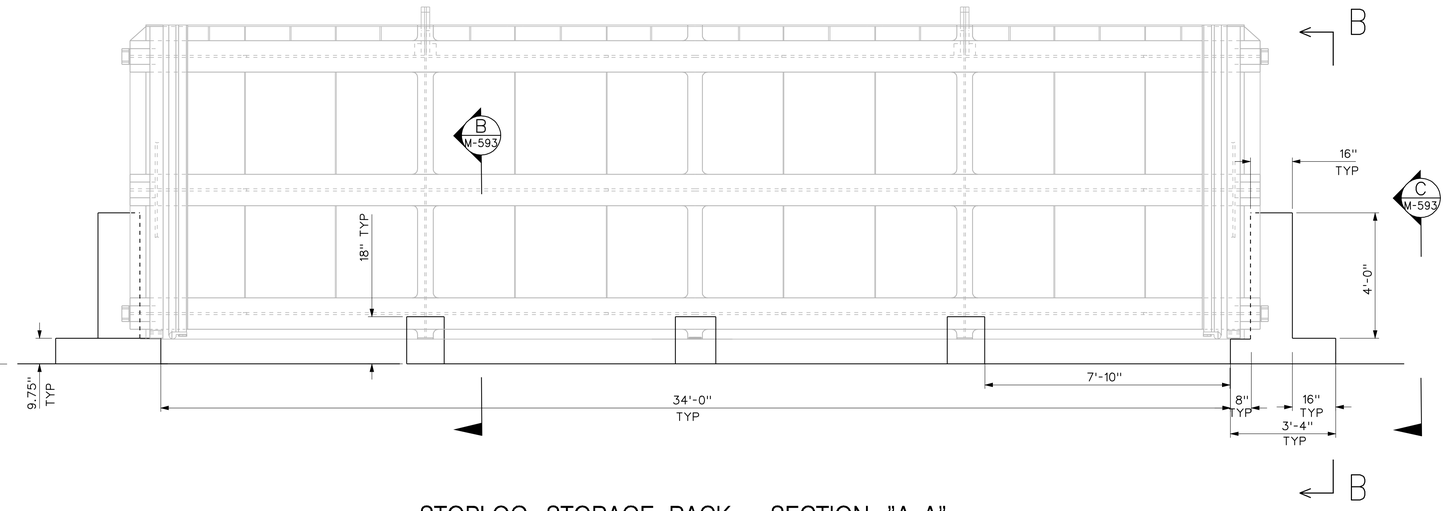

STOPLOG STORAGE RACK – SECTION "A–A"

NOT TO SCALE

US Army Corps of Engineers
Seattle District

Symbol	Description	Appr.	Date
			/ /

Date: 16 MAR 06
File: E-56-14-19
Rev.

Designed by: DJB
Drawn by: DJB
Checked by:

U.S.ARMY ENGINEER DISTRICT,SEATTLE
CORPS OF ENGINEERS
SEATTLE, WASHINGTON
Prepared by:

ADDITIONAL WATER STORAGE PROJECT
HOWARD HANSON DAM
GREEN RIVER WASHINGTON

STOPLOG STORAGE DETAILS

Plate number:
M-592
Sheet of

DESIGN FILE: I:\AECDESIGNS\HHAW\Mechanical\HHAWM-592rg3.DGN
DATE AND TIME PLOTTED: 07-AUG-2008 12:09

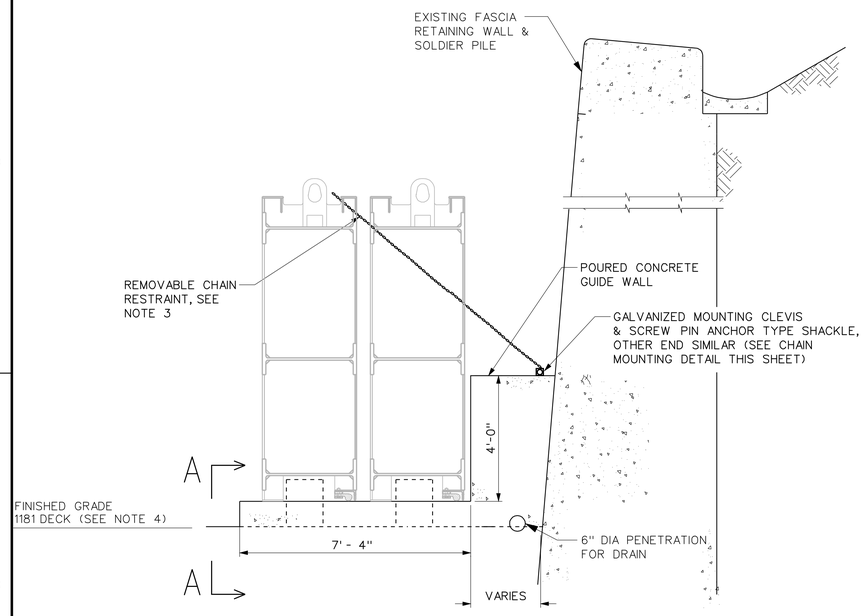

STOPLOG STORAGE RACK DETAIL I

NOT TO SCALE

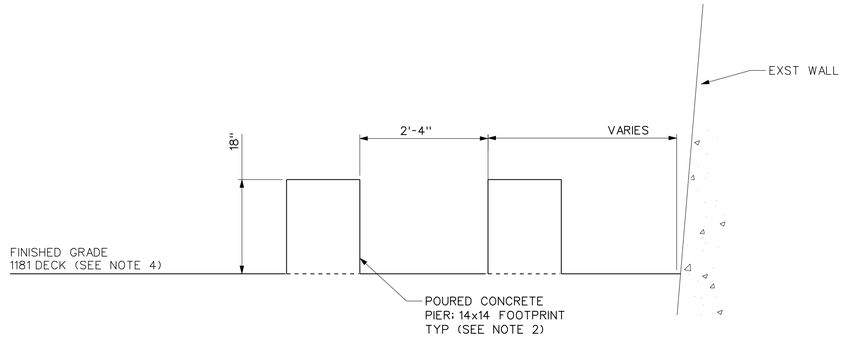

STOPLOG STORAGE RACK – ELEV "B–B"

B M-592

NOT TO SCALE

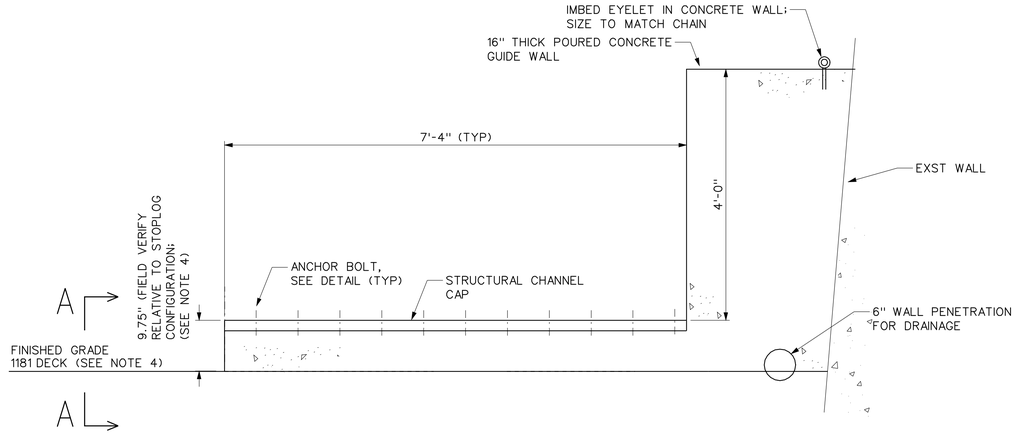

STOPLOG STORAGE RACK – ELEV "C–C"

C M-592

NOT TO SCALE

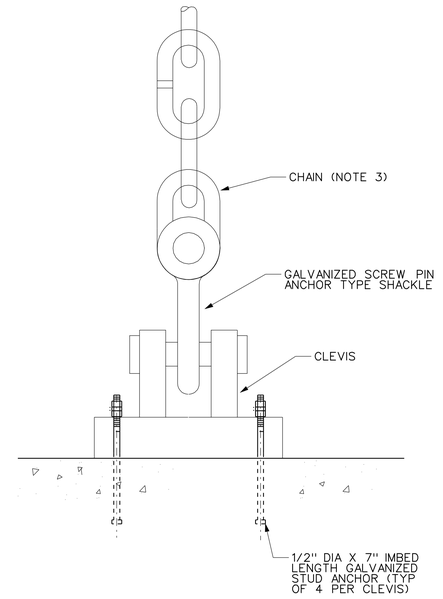

NOTE: PROVIDE TWO PER PAIR OF STOPLOGS

CHAIN MOUNTING DETAIL

NOT TO SCALE

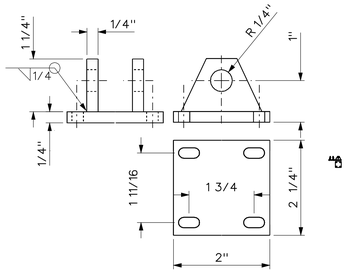

NOTE: COMMERCIAL ITEMS HAVING SIMILAR DIMENSIONS MAY BE SUBSTITUTED FOR APPROVAL

CLEVIS DETAIL

NOT TO SCALE

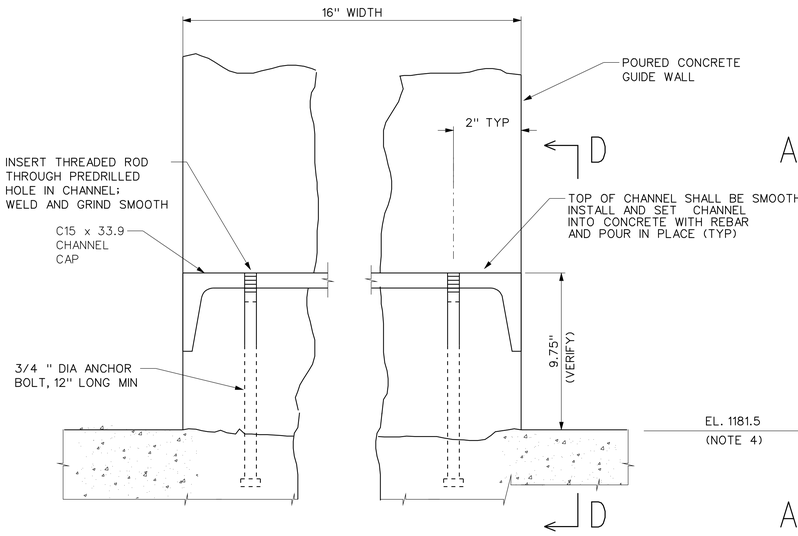

STOPLOG STORAGE RACK – ANCHOR DETAIL "A–A"

A M-592

NOT TO SCALE

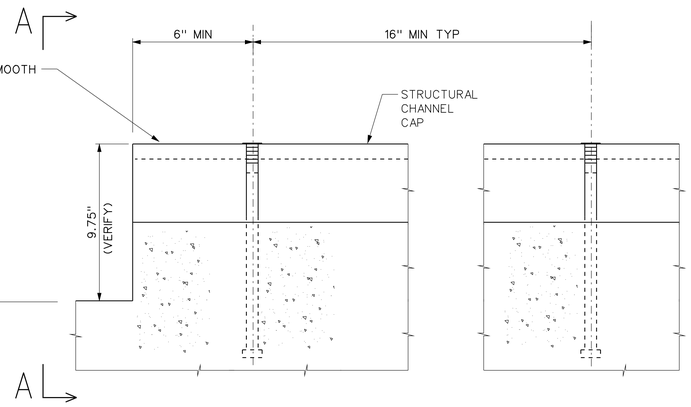

STOPLOG STORAGE RACK – ELEV "D–D"

NOT TO SCALE

STOPLOG RACK NOTES:

1. STOPLOG STORAGE & SUPPORT FIXTURES SHALL BE CONFIGURED TO MATCH EACH INDIVIDUAL STOPLOG.

2. CONCRETE SUPPORT PIER HIEGHT SHALL BE CONFIRMED IN THE FIELD TO MATE WITH STOPLOG FIT TO FULLY SUPPORT THE DOWNSTREAM STOPLOG STRUCTURE WITH NO COMPRESSION OF THE STOPLOG SEALS AS SHOWN. CONCRETE CRADLE SHALL BE CONFIGURED SUCH THAT STOPLOG BOTTOM SEALS CLEAR CONCRETE; UNDER NO CIRCUMSTANCE SHALL THE STOPLOG RESTING POSITION COMPRESS THE SEALS.

3. CHAIN SHALL BE GRADE 80 1/2" ALLOY STEEL HIGH STRENGTH; WITH SHACKLE & CLEVIS EACH END. LENGTH SHALL BE SPECIFIC TO EACH STOPLOG (APPROX 50 FEET EACH).

4. STOPLOGS SHALL BE STORED LEVEL. FIELD VERIFY ALL DIMENSIONS AND ACCOUNT FOR SLOPING OF THE 1181 SURFACE FOR DRAINAGE, RETAINING WALL CURVATURE, ETC.

5. FORKLIFT STRONGBACK AND TIE-DOWN (FOR STOPLOG MOVEMENT AND PLACEMENT) SHALL BE PROVIDED SEPARATELY (NOT IN CONTRACT).

US Army Corps of Engineers
Seattle District

Symbol	Description	Date	Appr.	Symbol	Description
		/ /			

Date: 16 MAR 06
File: E-56-14-19
Rev.

Designed by: DJB
Drawn by: DJB
Checked by:

U.S.ARMY ENGINEER DISTRICT,SEATTLE
CORPS OF ENGINEERS
SEATTLE, WASHINGTON
Prepared by:

ADDITIONAL WATER STORAGE PROJECT
HOWARD HANSON DAM
GREEN RIVER WASHINGTON

STOPLOG STORAGE DETAILS II

Plate number: M-593
Sheet of

DESIGN FILE: I:\AECDESIGNS\HHAW\Mechanical\HHAWM-593r3.DGN
DATE AND TIME PLOTTED: 07-AUG-2008 12:10

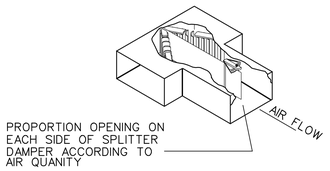

SPLITTER DETAIL

NOT TO SCALE

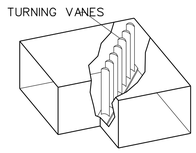

NOTE: IN LIEU OF A MITERED ELBOW, A RADIUS ELBOW HAVING A TURNING RADIUS R / DIAMETER D = 0.5 OR LARGER IAW SMACNA MAY BE USED.

TURNING VANE DETAIL

NOT TO SCALE

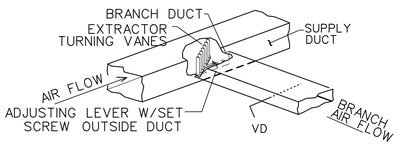

TYPICAL TAKE-OFF DETAIL

NOT TO SCALE

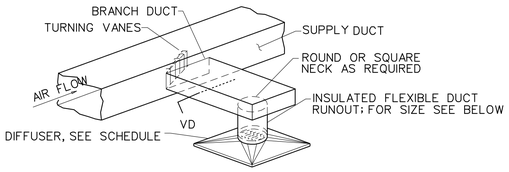

DUCT RUNOUTS SHALL BE SIZED IN ACCORDANCE WITH THE FOLLOWING:

0 - 105 CFM	6" DIA
106 - 212 CFM	8" DIA
213 - 425 CFM	10" DIA
425 - 650 CFM	12" DIA
660 - 1000 CFM	14" DIA

CEILING DIFFUSER DETAIL

NOT TO SCALE

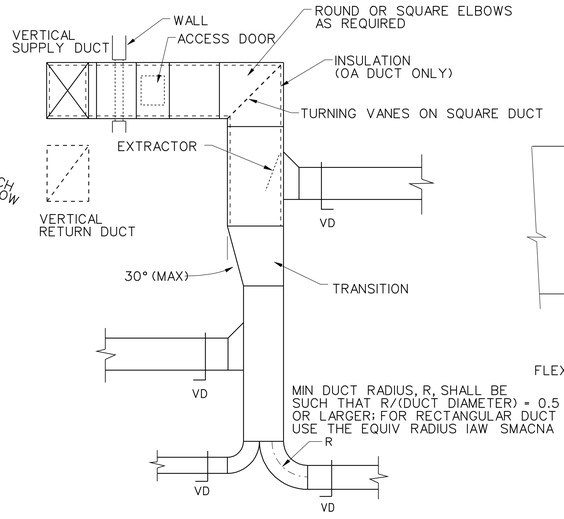

TYPICAL SUPPLY OR RETURN DUCT

NOT TO SCALE

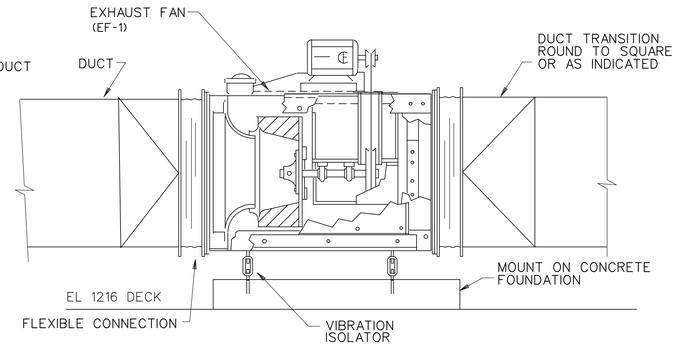

INLINE CENTRIFUGAL EXHAUST FAN DETAIL

A M-112

NOT TO SCALE

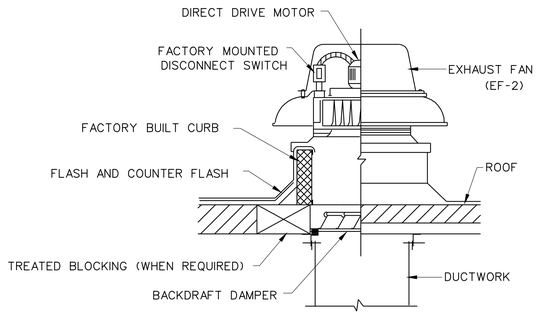

ROOFTOP EXHAUST FAN DETAIL

B M-113

NOT TO SCALE

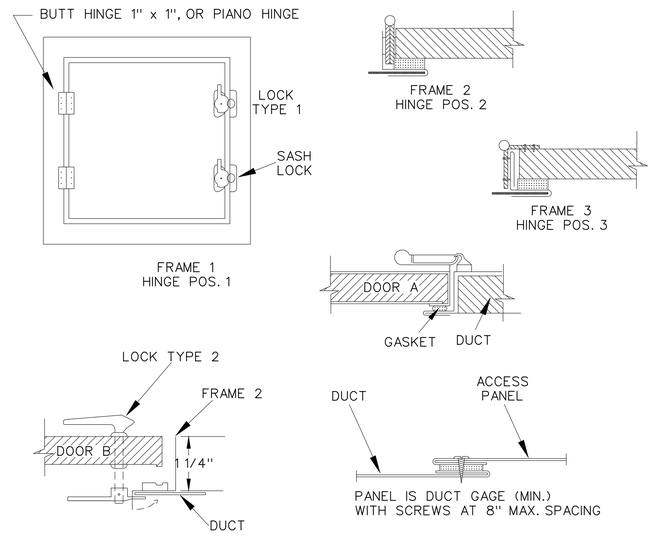

	Door Size	No. Hinges	No. Locks	Metal Gage		
				Frame	Door	Back
2" w.g. Static and Less	12" x 12"	2	1-S	24	26	26
	16" x 20"	2	2-S	22	24	26
	24" x 24"	3	2-S	22	22	26
3" w.g. Static	12" x 12"	2	1-S	22	22	26
	16" x 20"	2	1-S,1-T,1-B	20	20	26
	24" x 24"	3	2-S,1-T,1-B	20	20	24
4" w.g. to 10" w.g.	12" x 12"	2	1-S,1-T,1-B	20	20	26
	16" x 20"	3	2-S,1-T,1-B	18	18	24
	24" x 24"	3	2-S,2-T,2-B	18	18	24
S = Side opposite hinges, T = Top, B = Bottom						

DUCT ACCESS DOOR DETAIL

NOT TO SCALE

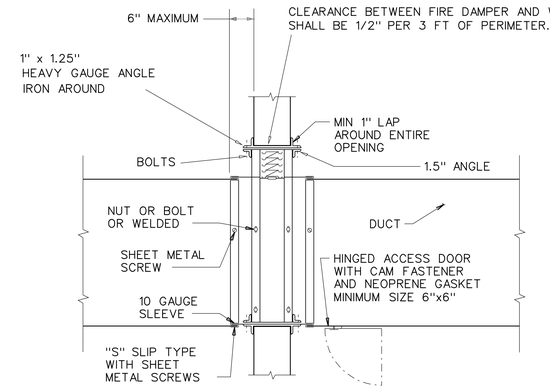

NOTES:

1. PROVIDE FIRE DAMPER FOR ROUND DUCT OR USE TRANSITIONS FOR ROUND TO SQUARE DUCT.
2. HORIZONTAL FIRE DAMPER INSTALLATION IS SIMILAR EXCEPT WITH A SPRING LOADED FIRE DAMPER.
3. LINE WALL OPENING WITH WALL SURFACE MATERIAL ON ALL FOUR SIDES.
4. ATTACH DAMPER FRAME TO SLEEVE IAW MANUFACTUER'S INSTRUCTIONS.

FIRE DAMPER WITH FUSIBLE LINK

NOT TO SCALE

US Army Corps of Engineers
Seattle District

Symbol	Description	Symbol	Appr.	Date
				/ /

Date: 16 MAR 06
File: E-56-14-19
Rev.

Designed by:
Drawn by:
Checked by:

U.S.ARMY ENGINEER DISTRICT,SEATTLE
CORPS OF ENGINEERS
SEATTLE, WASHINGTON
Prepared by:

ADDITIONAL WATER STORAGE PROJECT
HOWARD HANSON DAM
GREEN RIVER WASHINGTON

MISC DETAILS I

Plate number:
M-595
Sheet of

DESIGN FILE: J:\AECDESIGNS\HHAW\Mechanical\HHAWM-595r05.DGN
DATE AND TIME PLOTTED: 07-AUG-2008 12:10

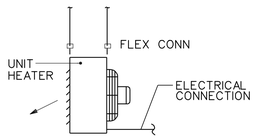

NOTE: PROVIDE REMOTE THERMOSTAT

ELECTRIC UNIT HEATER DETAIL

NOT TO SCALE

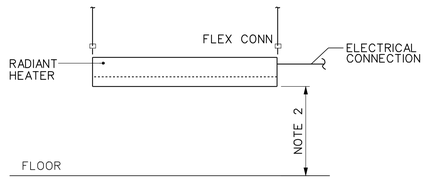

NOTES:
1. PROVIDE REMOTE THERMOSTAT
2. MINIMUM MOUNTING HEIGHT:
   1.5 kW: 7'-9"
   3.0 kW: 8'-10"

ELECTRIC RADIANT HEATER DETAIL

NOT TO SCALE

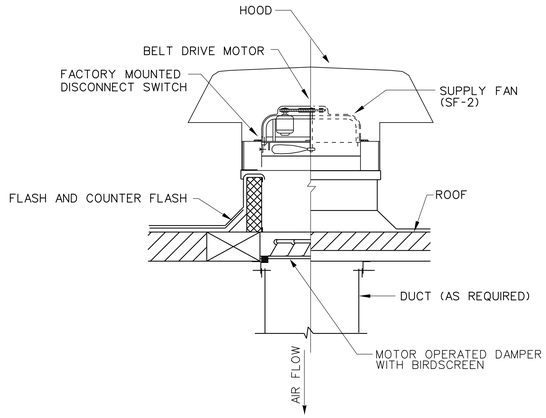

STAIRWELL SUPPLY FAN DETAIL (A / M-113)

NOT TO SCALE

US Army Corps of Engineers
Seattle District

Symbol	Description	Date	Appr.	Symbol	Description
		/ /			

Designed by: DJB
Drawn by: DJB
Checked by:
Date: 16 MAR 06
File • E-56-14-19
Rev.

U.S.ARMY ENGINEER DISTRICT,SEATTLE
CORPS OF ENGINEERS
SEATTLE, WASHINGTON
Prepared by:

ADDITIONAL WATER STORAGE PROJECT
HOWARD HANSON DAM
MISC DETAILS II
GREEN RIVER WASHINGTON

Plate number:
M-596
Sheet of

DATE AND TIME PLOTTED: 07-AUG-2008 12:10 DESIGN FILE: I:\AECDESIGNS\HHAW\Mechanical\HHAWM-596rg6.DGN

DOGGING DEVICE GENERAL NOTES:

1. DOGGING DEVICE SHALL BE LOCATED AND INSTALLED AS SHOWN ON THE STRUCTURAL AND MECHANICAL DRAWINGS; SEE S-160 AND M-150.

2. PROVIDE ONE COMPLETE EMERGENCY GATE DOGGING MECHANISM AS SHOWN HERE-IN. ALL DIMENSIONS SHALL CONFORM TO REFERENCE DRAWING E-56-11-35.1 SHEET 36/50 (PLATE 83).

3. AS A MINIMUM, PROVIDE ONE ASSEMBLY CONSISTING OF FABRICATED PARTS IN ACCORDANCE WITH THE FOLLWING REFERENCE DRAWINGS:
GENERAL ARRANGEMENT DWG NO 9222
ASSEM & DET OF DOG BAR & CASING DWG NO 9223
DETAILS (I) REF DWG NO 9224
DETAILS (II) REF DWG NO 9225

PARTS NUMBERED AS IN THE REFERENCE DRAWINGS ARE TO BE PROVIDED AS FOLLOWS:

NOTES, CONTINUED:

4. ITEM 13 (ABOVE) IS NOT REQUIRED FOR THE FINAL ASSEMBLY. PROVIDE ITEMS 13A AND 13B AS INDICATED HERE-IN. ITEM 13 ON THE REFERENCE DRAWINGS IS INCLUDED FOR INFORMATION ONLY.

5. CONTRACTOR SHALL PROVIDE ACTUATING SYSTEM COMPLETE WITH ELECTRICAL LIMIT SWITCH INTERLOCKS TO CUT OFF MOTOR POWER UPON ACTIVATION.

6. ELECTRICAL POWER SHALL UTILIZE THE EXISTING POWER SOURCE, SEE PLATE E-X.

7. CONTRACTOR SHALL PROVIDE POSITION FEEDBACK USING FOR CONFIRMATION OF ACTUAL ACTUATOR POSITION (FULLY EXTENDED & FULLY RETRACTED) USING THE INDICATED EXTERNALLY INSTALLED PROXIMITY SENSORS. IN ADDITION, CONTRACTOR SHALL INCLUDE MANUFACTURER'S FACTORY OPTION LIMIT SWITCHES FOR LOCAL INDICATION (FULLY EXTENDED & FULLY RETRACTED) OF ACTUATOR POSITION. CONTRACTOR SHALL PROVIDE CAPABILITY FOR A REMOTE ACTUATOR POSITION INDICATION READOUT COMPLETE WITH OPERATOR'S PANEL WITH PILOT LIGHTS IN THE EXISTING TOWER AT EL 1228. SEE SPEC 15446.

8. FOR ACTUATOR SCHEDULE, SEE PLATE M-606.

MARK	ITEM	MATERIAL	SPEC	QTY
1	DOG	CRES	SS304	1
2	ROD	CRES	SS304	1
3	BUSHING	AL-BRONZE		1
4	CAP SCREW			20
5	PACKING GLAND	AL-BRONZE		1
6	STUD & NUT			2
7	PACKING LAND HOUSING	CAST STEEL		1
8	HEX HD MACHINE SCREW			12
9	DOG HOUSING	PLATE		1
10	"O" RING	NEOPRENE		1(1 SPARE)
11	PACKING			2 SETS
13	FORK	SEE DETAIL OF MODIFIED COUPLING PARTS 13A AND 13B THIS SHEET		
30	LIMIT SWITCH	"GO SWITCH" OR EQUAL. SEE NOTE 7. PROVIDE IN ACCORDANCE WITH DOGGING ACTUATOR MFR'S RECOMMENDATION		
36	PIN			1
37	BUSHING	AL BRONZE		8
41	HEX HD MACHINE SCREW			4
42	ANCHOR BOLT & NUT			4
43	BOLT & NUT			4

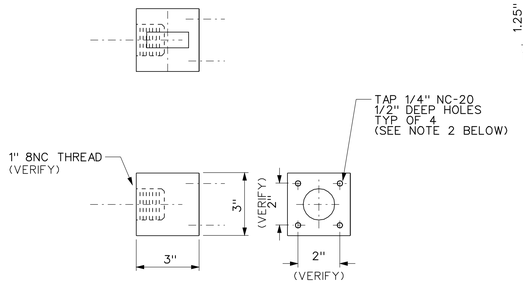

NOTES:
1. PROVIDE 1
2. USE CLEVIS BRACKET FOR TEMPLATE
3. SUBSTITUTE THIS ITEM FOR ITEM 13 SHOWN IN REFERENCE DRAWING 9224

DOG COUPLING DETAIL (13A)

NOT TO SCALE
MATERIAL: MACHINE STEEL

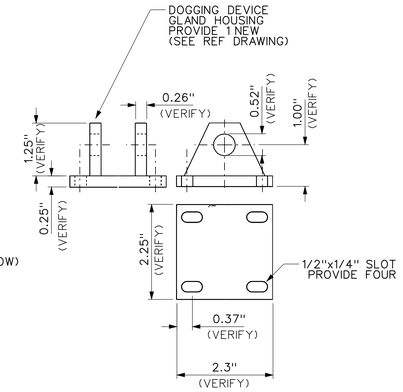

NOTES:
1. PROVIDE 2
2. COORDINATE CLEVIS DIMENSIONS W/ACTUATOR

DOG CLEVIS BRACKET DETAIL (13B)

NOT TO SCALE
MATERIAL: MACHINE STEEL

DOGGING ACTUATOR DETAIL (A, M-599)

NOT TO SCALE

DOGGING ACTUATOR SECTION "A-A"

NOT TO SCALE

FOR A COMPLETE PARTS LIST AND ADDITIONAL DETAILS SEE REFERENCE DRAWING E-66-11-35.1 SH 36 (PLATE 83)

US Army Corps of Engineers
Seattle District

Symbol	Description	Appr.	Date
			/ /

Designed by:
Drawn by:
Checked by:
Prepared by:
Date: 16 MAR 06
File: E-56-14-19
Rev.

U.S.ARMY ENGINEER DISTRICT, SEATTLE
CORPS OF ENGINEERS
SEATTLE, WASHINGTON

ADDITIONAL WATER STORAGE PROJECT
HOWARD HANSON DAM
GREEN RIVER WASHINGTON

DOGGING DEVICE DETAILS I

Plate number: M-598
Sheet of

DESIGN FILE: I:\AECDESIGNS\HHAW\Mechanical\HHAWM-598r-g8.DGN
DATE AND TIME PLOTTED: 07-AUG-2008 12:11

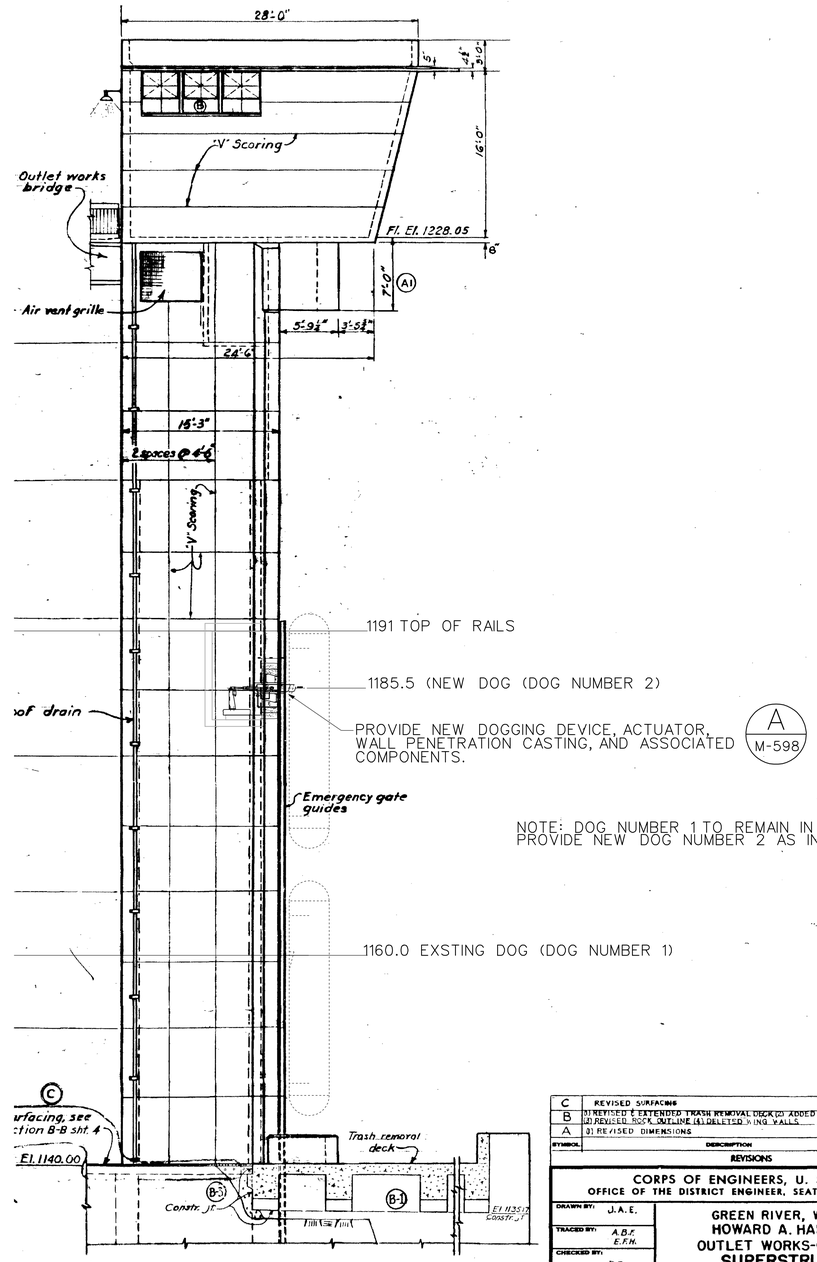

SIDE ELEVATION
Scale: 1"= 5'-0"

EXISTING DOG ACTUATOR CONTROL PANEL
NOT TO SCALE

SYMBOL	DESCRIPTION	DATE	APPROVAL
C	REVISED SURFACING	22 SEPT 59	
B	(1) REVISED & EXTENDED TRASH REMOVAL DECK (2) ADDED RECESS (3) REVISED ROCK OUTLINE (4) DELETED WING WALLS	28 Aug 59	
A	(1) REVISED DIMENSIONS	3 OCT. 58	

REVISIONS

CORPS OF ENGINEERS, U. S. ARMY
OFFICE OF THE DISTRICT ENGINEER, SEATTLE, WASHINGTON

DRAWN BY: J.A.E.
TRACED BY: A.B.F. E.F.H.
CHECKED BY: R.P.
PREPARED:
CHIEF, CIVIL AND DESIGN SECT.
REVIEWED:
CHIEF, SAFETY BRANCH
SUBMITTED:
ASST. FOR CIVIL DES., DESIGN BR.
RECOMMENDED:

GREEN RIVER, WASHINGTON
HOWARD A. HANSON DAM
OUTLET WORKS-GATE TOWER
SUPERSTRUCTURE
ELEVATIONS

APPROVED FOR THE DISTRICT ENGINEER:
CHIEF, ENGINEERING DIVISION
DATE:
SCALE: AS SHOWN
SPEC. NO.
DRAWING NUMBER
AS-BLT E-56-11-35.1

US Army Corps of Engineers
Seattle District

Symbol	Description	Date	Appr.	Symbol	Description
		/ /			

U.S. ARMY ENGINEER DISTRICT, SEATTLE
CORPS OF ENGINEERS
SEATTLE, WASHINGTON

Designed by:
Drawn by:
Checked by:
Date: 16 MAR 06
File: E-56-14-19
Rev.

Prepared by:

ADDITIONAL WATER STORAGE PROJECT
HOWARD HANSON DAM
DOGGING DEVICE
DETAILS II
GREEN RIVER WASHINGTON

Plate number:
M-599
Sheet of

DATE AND TIME PLOTTED: 07-AUG-2008 12:11
DESIGN FILE: I:\AECDESIGNS\HHAW\Mechanical\HHAWM-599rg9.DGN

AWC GATE HYDRAULIC POWER UNIT/OIL PUMP SCHEDULE

MARK	PUMP MARK	SYSTEM	RPM	GPM	TOTAL HEAD PRESSURE PSI	MIN. % EFF.	MOTOR			MODEL No. OR EQUAL	REMARKS
							BHP	VOLTS/ PHASE/ HERTZ	RPM		
HPU-1	EP-1	AWC EMERGENCY GATE HYDRAULIC SYS	1750	4.6	1500	82	4.9	460v/3PH	1760	REXROTH MODEL PVV	FIXED POSITIVE DISPLACEMENT VANE
HPU-1	RP-1	AWC RADIAL GATE HYDRAULIC SYS	1750	4.6	1500	82	4.9	460v/3PH	1760	REXROTH MODEL PVV	FIXED POSITIVE DISPLACEMENT VANE

AWC GATE HYDRAULIC LINEAR ACTUATOR SCHEDULE

MARK	INSIDE DIA (INCHES)	STROKE (INCHES)	ROD DIA (INCHES)	PRESSURE PSI	DISPLACEMENT GALLONS	MODEL No. OR EQUAL	REMARKS
RG-1	7.9	120	6.3	1500	45	BOSCH-REXROTH CDH1	LOAD CAPABILITY (UP): 43150 LBS LOAD CAPABILOITY (DOWN): 73500 LBS
EG-1	12.6	102	5.0	1500	88	BOSCH-REXROTH CDH1	LOAD CAPABILITY (UP): 140250 LBS LOAD CAPABILOITY (DOWN): 186950 LBS

DIRECTIONAL VALVE SCHEDULE

MARK	TYPE	QTY	ACTUATOR TYPE	PRESSURE PSI	FLOW RATING (GPM)	MODEL No. OR EQUAL	REMARKS
DV-1	2-POSITION SPOOL	1	SOLENOID	5000	7.5	SUN DLDA-S	2-WAY SPRING RETURN, SOFT SHIFT
DV-2	2-POSITION SPOOL	2	SOLENOID	3000	8	HYDRAFORCE SV08	2-WAY, NC
DV-3	3-POSITION SPOOL	2	SOLENOID	5000	5	SUN DNDC	4-WAY, OPEN TO TANK IN NEUTRAL POSITION

AWC GATE HYDRAULIC SYSTEM RELIEF VALVE SCHEDULE

MARK	POSITION	MAX CRACKING PSI	PSI RANGE	FLOW RATING (GPM)	MODEL No. OR EQUAL	REMARKS
ERV	NORMALLY CLOSED	2100	3000	7	SUN RDBA	DIRECT OPERATED THREADED HOUSING, SUBPLATE MTG, CARTRIDGE, SCREW ADJ
RRV	" " "	2100	3000	7	SUN RDBA	" " "

HYDRAULIC SYSTEM FILTER SCHEDULE

MARK	BETA RATING MICRON	QTY	FLOW RATING (GPM)	MAX DELTA PSI HOUSING	MIN DIRT CAPACITY (POUNDS)	MODEL No. OR EQUAL	REMARKS
FR-1	10	1	32	2	0.055115	HYCON RFBNHC	WITH DISPOSABLE ELEMENT & SPARES
FR-2	10	4	32	2	0.055115	HYCON RFBNHC	" " "
FS-1	5	2	32	4		HYCON DFBNHC	" " "

AWC GATE HYDRAULIC SYSTEM PRESSURE MEASUREMENT DEVICE SCHEDULE

MARK	SWITCH/ GAUGE	LOW PSI	HIGH PSI		MODEL No. OR EQUAL	REMARKS
EPS-1	PRESSURE SWITCH	1	30		HYDAC EDS?	
RPS-1	PRESSURE SWITCH	1	10		HYDAC EDS?	

HYDRAULIC POWER UNIT TANK ACCESSORIES

MARK	DESCRIPTION	QTY	MOUNTING	MODEL No. OR EQUAL	REMARKS
TG	TEMPERATURE GAUGE	1	TANK		FIXED STEM BI-METAL (NO MERCURY)
TS-1,-2	TEMPERATURE SWITCH	1 EA	TANK		+/- 2F DIFFERENTIAL
L-1	LIQUID LEVEL SWITCH	1	TANK		MAGNETIC FLOAT
RM-1	RESERVOIR MAGNET	2	TANK	KEBBY	MAGNETIC
FP-1	RESERVOIR FILLER	1	TANK		WITH FILLER BREATHER & SCREEN
RB-1	RESERVOIR BREATHER	1	TANK		3 MICRON NOMICAL FILTRATION
SG	SIGHT GLASS	1	TANK		VITON SEALS
RL-1,2	RESERVOIR LEVEL	1 EA	TANK		(HIGH & LOW)
HTR	RESERVOIR HEATER	1	TANK		1.5 kW TANK TOP MOUNT

NOTE: PROVIDE DRAIN VALVE, BREATHER, AND OTHER ACCESSORIES AS REQUIRED BY MANUFACTURER

NOTE: FOR THE AWC SYSTEM HYDRAULIC SCHEMATIC, SEE SHEET M-561

HYDRAULIC SYSTEM LEGEND

MAIN PRESSURE & RETURN LINES

CONTROL LINE

DRAIN LINE

SHUT-OFF VALVE

BALL VALVE

CHECK VALVE

FLEXIBLE HOSE

LDVT — LINEAR VARIABLE DISPLACEMENT TRANSDUCER

FR-1 — FILTER

RP-1 — SERVICE PUMP, FIXED DISPLACEMENT

POC — PILOT OPERATED CHECK

RCV — COUNTERBALANCE VALVE

RVF — VELOCITY FUSE

FR-2 — RETURN FILTER ASSEMBY & CHECK

EPS-1, FS-1 — PRESSURE SWITCH & SUPPLY FILTER

DV-1 — 2-WAY DIRECTIONAL VALVE, SOLENOID OPERATED, SPRING OFFSET

EFC-1 — FLOW CONTROL VALVE, VARIABLE ORIFICE TYPE WITH INTERNAL CHECK DIRECTION OF CONTROLLED FLOW, DIRECTION OF FREE FLOW

US Army Corps of Engineers
Seattle District

E-1
PRESSURE:
LOAD CAPAB
LOAD CAPAB
BORE:
ROD:
STROKE:

R-1
PRESSURE:
LOAD CAPABI
LOAD CAPABI
BORE:
ROD:
STROKE:

Symbol	Description	Date
		/ /

Appr.

HY
RE
FIL
PR

Designed by: DJB
Drawn by: DJB
Checked by:
Prepared by:
Date: 16 MAR 06
File: E-56-14-19
Rev.

U.S.ARMY ENGINEER DISTRICT,SEATTLE
CORPS OF ENGINEERS
SEATTLE, WASHINGTON

ADDITIONAL WATER STORAGE PROJECT
HOWARD HANSON DAM
AWC GATE HYDRAULIC SYSTEM SCHEDULES I
GREEN RIVER WASHINGTON

Plate number:
M-601
Sheet of

I:\ACCDESIGNS\HHAWM-601S01.DGN
DESIGN FILE:
12:12
DATE AND TIME PLOTTED: 07-AUG-2008

FLOW CONTROL & ISOLATION VALVE SCHEDULE

MARK	QTY	SYSTEM	MOUNTING	MODEL No. OR EQUAL	REMARKS
EFC-1	1	EMERGENCY GATE	SUBPLATE	VICKERS FCG-3	PRESSURE COMPENSATED WITH MANUAL ADJUSTMENT
RFC-1	1	RADIAL GATE	SUBPLATE	VICKERS FCG-3	PRESSURE COMPENSATED WITH MANUAL ADJUSTMENT; FLOW LIMIT SHALL BE 1.4 GPM FOR LOW SPEED OPERATION
AGV		VARIES	MANIFOLD	PARKER BVHP	SHUT-OFF
DV	SEE DIRECTIONAL VALVE SCHEDULE				

LOAD CONTROL (COUNTERBALANCE) VALVE SCHEDULE

MARK	QTY	TYPE	MOUNTING	PRESSURE PSI MAX	FLOW RATING (GPM)	MODEL No. OR EQUAL	REMARKS
ECV-1	1	3 PORT	LINE	3000	15	SUN CBCB	REMOTE OPERATED, NON VENTED
RCV-1	1	3 PORT	LINE	3000	15	SUN CBCB	" " "

PILOT OPERATED CHECK VALVE SCHEDULE

MARK	QTY	TYPE	CRACKING PRESSURE	PRESSURE PSI MAX	FLOW RATING (GPM)	MODEL No. OR EQUAL	REMARKS
POC	2	SANDWICH PLATE	22	4600	16	REXROTH Z2S	SIZE 16; 4:1 RATIO

CIRCUITSAVER (VELOCITY FUSE) SCHEDULE

MARK	QTY	MOUNTING	PRESSURE PSI MAX	FLOW RATING (GPM)	MODEL No. OR EQUAL	REMARKS
EVF-1	1	LINE	3000	7	SUN FQ1A-XAV	VITON SEALS
RVF-1	1	LINE	3000	7	SUN FQ1A-XAV	VITON SEALS

MISCELLANEOUS

EHA-1,-2	HOSE ASSEMBLY	
RHA-1,-2	HOSE ASSEMBLY	
PG	PRESSURE GAUGE	DIAL INDICATOR W/ISOLATION VALVE & SNUBBER 0-3000 PSI SCALE
ABV	BALL VALVE	BALL VALVE MANUAL, HIGH PRESSURE 6000 PSI LOCKABLE IN OPEN & CLOSED POSITION 3/8" (NORMALLY CLOSED) PARKER BVHP OR EQUAL
XDR	TRANSDUCER	WITH LOCAL PRESSURE READOUT & 4-20mA REMOTE; NOSHOK 1900 OR EQUAL
CV	CHECK VALVE	5 PSI CRACKING PRESSURE; 3/8" PORTS

PILOT OPERATED CHECK VALVE SCHEDULE

MARK	QTY		CRACKING PRESSURE	PRESSURE PSI MAX	FLOW RATING (GPM)	MODEL No. OR EQUAL	REMARKS
CV-1	1		5	3000	5	PARKER C400	
CV-2	1		5	3000	5	PARKER C400	

AWC GATE SCHEDULE

MARK	AWC TUNNEL DIMENSIONS (FT)	ESTIMATED DEAD WT (LBS)	TYPE	MAX STATIC DESIGN HEAD (PSI)	SEALS	STROKE (INCHES)	REMARKS
R-1	5x8	8200	WELDED TRUNNION	85	RUBBER	120	PROVIDE WITH LINER WHERE INDICATED RUBBER J-BULB TOP SEAL
E-1	5x8	5000	WELDED SLIDE WITH BONNET	85	UHMW OR BRONZE	102	PROVIDE WITH LINER WHERE INDICATED

AWC GATE HYDRAULIC SYSTEM NOTES:

NOTES:

1. RADIAL GATE AND EMERGENCY GATE POSITION INDICATION SHALL BE VIA LINEAR VARIABLE DIFFERENTIAL TRANSDUCERS (LVDT). IN ADDITION, LOCAL GATE POSITION READOUT SHALL BE PROVIDED AT EL 1042. LOCAL GATE POSITION MAY RELY ON THE GATE MANUFACTURER'S STANDARD MEANS OF POSITION SENSING AND INDICATION. REMOTE OUTPUT OF REAL TIME GATE POSITION FOR EACH GATE SHALL BE PROVIDED TO A DESKTOP DISPLAY LOCATED AT EL 1228 NEAR THE FISH BYPASS CONTROLS. SEE SPECIFICATIONS.

2. ALL SOLENOID OPERATED VALVES ARE SHOWN IN DE-ENERGIZED POSITION.

3. -·-·-·- LINES INDICATE MANIFOLD MOUNT

4. DIRECTIONAL VALVES SHALL BE BOTH SOLENOID AND MANUALLY OPERABLE OR AN ADDITIONAL MANUAL VALVE SHALL BE INSTALLED PARALLEL TO EACH SOLENOID OPERATED VALVE.

5. ANNUNCIATOR PANEL SHALL BE CLEARLY VISIBLE WHEN THE OPERATOR IS WITHIN REACH OF THE MANUAL VALVES.

6. PUMPS SHALL BE MOUNTED ON RESERVOIR TANK.

7. FILTER COMPONENTS SHALL BE LOCATED FOR EASE OF ACCESS.

8. FOR MECHANICAL ROOM LAYOUT, SEE M-404.

9. RESILIENT SEALS SHALL BE COMPATIBLE WITH HYDRAULIC FLUID, SEE SPEC.

10. ALL PIPING SHALL BE WELDED, SEE SPEC.

11. HPU-1 RESERVOIR SIZE SHALL BE 150 GALLON MINIMUM.

US Army Corps of Engineers
Seattle District

Symbol	Description	Date	Appr.	Symbol	Description
		/ /			

Designed by: DJB
Drawn by: DJB
Checked by:
Date: 16 MAR 06
File: E-56-14-19
Rev.

U.S.ARMY ENGINEER DISTRICT SEATTLE
CORPS OF ENGINEERS
SEATTLE, WASHINGTON
Prepared by:

ADDITIONAL WATER STORAGE PROJECT
HOWARD HANSON DAM
GREEN RIVER WASHINGTON

AWC GATE HYDRAULIC SYSTEM SCHEDULES II

Plate number:
M-602
Sheet of

DESIGN FILE: I:\AECDESIGNS\HHAWM\Mechanical\HHAWM-602s02.DGN
DATE AND TIME PLOTTED: 07-AUG-2008 12:12

EXHAUST/SUPPLY/BLOWER FAN SCHEDULE

MARK NO.	LOCATION	AREA SERVED	AIR FLOW (CFM)	SP "WC	TYPE	MAX SONES	MAX RPM	MOTOR DATA				REMARKS
								BHP	VOLTS	PHASE	HZ	
EF-1	EL 1228	1163, 1180, 1216, 1228	2538	0.75"	CNTFGL IN-LINE	12	1725	0.56	208	1	60	SEE PLATE M-594 W/SPRING ISOLATOR
EF-2	EL 1257	ELEV MCHRY RM & EL 1245	1120	0.5"	CNTFGL DNBLAST	9.2	1300	0.16	208	1	60	ROOFTOP MOUNT SEE PLATE M-113 & M-594
EF-3	EL 1216	(6) GALLERIES 1061 - 1140	9800	1 1/8	CNTFGL	39	1605	7.2	208	1	60	SEE PLATE M-595
SF-1	SEE AHU-1											SEE AHU-1 SCHEDULE
SF-2	EL 1257	STAIRWELL	3940	0.2"	PROP	22	1052	0.6	120	1	60	ROOFTOP MOUNT SEE PLATE M-113 & M-594

ELECTRIC UNIT HEATER SCHEDULE

SYMBOL	LOCATION	MIN. CAP. KW	FAN							MOUNTING HEIGHT FT	REMARKS
			MIN CFM	RPM	HORIZ THROW FT	MOTOR					
						X	V	PH	HZ		
UH-1	MECH RM	5	362	1200	15		460	3	60		
UH-2	NOT USED										
UH-3	ELEV MCHRY RM	3	362	1200	15		460	3	60		
UH-4	ELEV 1245	3	362	1200	15		460	3	60		
UH-5	ELEV 1204	5	362	1200	15		460	3	60		
UH-6	ELEV 1194	5	362	1200	15		460	3	60		
UH-7	ELEV 1181	5	362	1200	15		460	3	60		
UH-8	NOT USED										
UH-9	ELEV 1140	5	362	1200	15		460	3	60		
UH-10	ELEV 1029 (SUMP RM)	3	362	1200	15		460	3	60		
UH-11	ELEV 1029 (TOWER)	5	362	1200	15		460	3	60		
UH-12	ELEV 1061	5	362	1200	15		460	3	60		

ELECTRIC RADIANT HEATER SCHEDULE

SYMBOL	LOCATION FLOOR LEVEL	MIN. CAP. KW	DIIMENSIONS	MOUNTING HEIGHT FT AFF	ELECTRICAL	REMARKS
RH-8	ELEV 1164	3.6	18x33	14	208v 1ph	CHROMALOX RBC OR EQUAL
RH-7	ELEV 1164	3.6	18x33	14	208v 1ph	" " "
RH-6	ELEV 1140	3.6	18x33	10	208v 1ph	" " "
RH-5	ELEV 1118	3.6	18x33	10	208v 1ph	" " "
RH-4	ELEV 1096	3.6	18x33	10	208v 3ph	" " "
RH-3	ELEV 1074	2.4	18x33	10	208v 3ph	" " "
RH-2	ELEV 1074	2.4	18x33	10	208v 3ph	" " "
RH-1B	ELEV 1051 (SERVES EL 1042)	2.4	18x33	18	208v 3ph	" " "
RH-1A	ELEV 1051 (SERVES EL 1042)	2.4	18x33	18	208v 3ph	" " "

AIR HANDLING UNIT SCHEDULE

MARK NO.	SUPPLY FAN SF-1									RETURN FAN RF-1									HEATING COIL, ELECTRIC								FILTERS	REMARKS
	AIR FLOW (CFM)	MIN TSP (IN WC)	MIN ESP (IN WC)	TYPE	NO. & MIN SIZE OF WHEEL	RPM	BHP	HP	TYPE OF DRIVE	AIR FLOW (CFM)	MIN TSP (IN WC)	MIN ESP (IN WC)	TYPE	NO. & MIN SIZE OF WHEEL	RPM	BHP	HP	TYPE OF DRIVE	MIN CAP (kW)	EAT F	LAT F	MAX AIR PD (IN WC)	MAX FACE VEL (FPM)	ELECTRICAL V	ELECTRICAL PHASE	ELECTRICAL HZ		
AHU-1	6545	3.75	3.25?	FC	15	1100	5.8	7.5	CV	5405	2.0	1.75?	FC	15	1100	2.4	3	CV	8	24	58	X	X	460	1	60	X	X
																											X	X

US Army Corps of Engineers
Seattle District

Description	Symbol	Appr.	Date
			/ /

Designed by: DJB
Drawn by: DJB
Checked by:
Date: 16 MAR 06
File # E-56-14-19
Rev.

U.S.ARMY ENGINEER DISTRICT,SEATTLE
CORPS OF ENGINEERS
SEATTLE, WASHINGTON
Prepared by:

ADDITIONAL WATER STORAGE PROJECT
HOWARD HANSON DAM
HVAC SYSTEM SCHEDULES I
GREEN RIVER WASHINGTON

Plate number:
M-603
Sheet of

DESIGN FILE: I:\AECDESIGNS\HHAW\Mechanical\HHAWM-603s03.DGN
DATE AND TIME PLOTTED: 07-AUG-2008 12:13

AIR DISTRIBUTION DEVICE SCHEDULE

MARK NO.	SERVICE	TYPE	MOUNTING SYSTEM	MATERIAL	MAX FLOW (CFM) NOTE 3	SIZE (in x in)	NECK VEL (fpm)	MAX P.D. (in wg)	DAMPER	REMARKS
CD-1	SUPPLY	SQUARE DIFFUSER ROUND NECK	EXPOSED DUCT MOUNTED	STEEL	300	14x14	<526	<0.013		10" NECK
CD-2	SUPPLY	SQUARE DIFFUSER ROUND NECK	EXPOSED DUCT MOUNTED	STEEL	530	24x24	<500	0.016		14" NECK
CD-3	SUPPLY	SQUARE DIFFUSER ROUND NECK	EXPOSED DUCT MOUNTED	STEEL	100	8x8	<472	0.014		6" NECK
SR-1	SUPPLY	HORIZONTAL SIDEWALL REGISTER	WALL MOUNTED	STEEL	219	12x12	300	0.007		2-WAY, 1/2" GRILLE
SR-2	SUPPLY	HORIZONTAL SIDEWALL REGISTER	EXPOSED DUCT MOUNTED	STEEL	312	20x8	400	0.011		2-WAY, 1/2" GRILLE
SR-3	SUPPLY	CEILING SUPPLY REGISTER	EXPOSED DUCT MOUNTED	STEEL	606	24x8	600	0.023		2-WAY, 1/2" GRILLE
SR-4	SUPPLY	HORIZONTAL SIDEWALL REGISTER	EXPOSED DUCT MOUNTED	STEEL	606	24x8	600	0.023		2-WAY, 1/2" GRILLE
TG-1	TRANSFER	DOOR RETURN GRILLE	DOOR MOUNTED	STEEL	280	14x12	350	0.017		SEE NOTE 1
RR-1	RETURN	REGISTER	EXPOSED DUCT MOUNTED	STEEL	288	14x14	300	0.01		
RR-2	RETURN	REGISTER	WALL MOUNTED	STEEL	276	12x12	400	0.017		
RR-3	RETURN	REGISTER	EXPOSED DUCT MOUNTED	STEEL	112	8x8	400	0.017		
RR-4	RETURN	REGISTER	EXPOSED DUCT MOUNTED	STEEL	2506	24x30	700	0.052		
ER-1	EXHAUST	REGISTER	EXPOSED DUCT MOUNTED	STEEL	288	14x14	300	0.010		
ER-2	EXHAUST	REGISTER	EXPOSED DUCT MOUNTED	STEEL	873	24x24	300	0.010		2 REQUIRED PER SMOKE INTAKE
ER-3	EXHAUST	REGISTER	SUSP ROCK MTL STUD CLG	STEEL	108	10x8	300	0.010		
ER-4	EXHAUST	REGISTER	EXPOSED DUCT MOUNTED	STEEL	648	24x18	300	0.010		
ER-5	EXHAUST	REGISTER	EXPOSED DUCT MOUNTED	STEEL	108	10x8	300	0.010		
ER-6	EXHAUST	REGISTER	EXPOSED DUCT MOUNTED	STEEL	1432	30x24	400	0.017		
ER-7	EXHAUST	REGISTER	EXPOSED DUCT MOUNTED	STEEL	324	14x12	400	0.017		
ER-8	EXHAUST	REGISTER	EXPOSED DUCT MOUNTED	STEEL	464	20x12	400	0.017		

1. ONE TRANSFER GRILLE ON EACH SIDE OF DOOR. COORDINATE WITH DOOR SCHEDULE ON ARCHITECTURAL SHEETS.
2. DUCT RUNOUTS SHALL BE SIZED IN ACCORDANCE WITH THE FOLLOWING:

DESIGN FLOW	DUCT SIZE	FPM
0 - 105 CFM	6" DIA	500
106 - 212 CFM	8" DIA	580
213 - 425 CFM	10" DIA	800
425 - 650 CFM	12" DIA	820
660 - 1000 CFM	14" DIA	950

3. FOR DESIGN AIRFLOW QUANTITIES SEE SHEET M-560.

AIR DAMPER/LOUVER SCHEDULE

MARK NO.	LOCATION	SERVICE	AIRFLOW (CFM)	ELEVATION AT BOTTOM OF LOUVER (NOTE 1)	SIZE W X H	MIN FREE AREA (SQFT)	MAX PD	REMARKS
LV-1A	ELEV 1228	AHU-1 INTAKE	6885	EL 1238'-9"	67x60	10.3		revised Jun08
LV-1B	ELEV 1228	MAKE-UP AIR INTAKE	2480	EL 1238'-9"	28x60	3.7		revised Jun08
LV-2A	ELEV 1228	AHU-1 EXHAUST	5405	EL 1239'-3"	48x54	6.5		
LV-2B	ELEV 1228	EF-1 EXHAUST	2538	EL 1239'-3"	24x54	3.0		
LV-3A	ELEV 1216	EF-3 EXHAUST	4900	EL 1224'	36x60	4.9		revised Jun08
LV-3B	ELEV 1216	EF-3 EXHAUST	4900	EL 1224'	36x60	4.9		revised Jun08

(1) COORDINATE LOUVER LOCATIONS AND SIZES PRIOR TO CONSTRUCTION WITH INSTALLATION OF STRUCTURE, DUCTWORK, ETC.
(2) WALL OPENINGS SHALL BE COMPATIBLE WITH EXTERIOR ARCHITECTURAL TREATMENT

ELEVATOR SCHEDULE

LOCATION	TOP LANDING ELEVATION	NUMBER OF STOPS	BOTTOM LANDING ELEVATION	SPEED (FPM)	TYPE	NOM CAPACITY	ELECTRICAL			REMARKS
							V	PHASE	HZ	
TOWER	1228	13	1042	350	GEARED TRACTION	4000 LBS	480	3	60	HOISTWAY DIMENSIONS: 9'-8" x 8'-1" (NOTE 1) AFTER ACCOUNTING FOR SEISMIC; THYSSEN-KRUPP SPF-40 OR EQUAL

NOTE (1): CONTRACTOR SHALL FIELD VERIFY AND COORDINATE ALL DIMENSIONS PERTAINING TO ELEVATOR FIT AND FUNCTION INTO CONCRETE STRUCTURE.

US Army Corps of Engineers
Seattle District

Symbol	Description	Date	Appr.	Symbol	Description
		/ /			

Date: 16 MAR 06
File: E-56-14-19
Rev.

Designed by: DJB
Drawn by: DJB
Checked by:
Prepared by:

U.S.ARMY ENGINEER DISTRICT,SEATTLE
CORPS OF ENGINEERS
SEATTLE, WASHINGTON

ADDITIONAL WATER STORAGE PROJECT
HOWARD HANSON DAM
GREEN RIVER WASHINGTON

HVAC SYSTEM
SCHEDULES II

Plate number:
M-604
Sheet of

FILE: I:\AECDESIGNS\HHAW\Mechanical\HHAWM-604s04.DGN
DESIGN FILE:
DATE AND TIME PLOTTED: 07-AUG-2008 12:13

PRESSURE SENSOR SCHEDULE

MARK	TYPE	LOCATION	SERVICE	MAX (RATED) PRESSURE		MAX SENSED PRESSURE, GAGE OR DIFFERENTIAL (PSID OR PSIG)	REMARKS
				MAX LINE PRESSURE (PSIG)	MAX DIFFERENTIAL PRESSURE (PSID)		
PS-1	GAGE PRESSURE	FISHWELL ACCESS GALLERY	ENTRANCE WELL WATER LEVEL	100	N/A	75	
PS-2	GAGE PRESSURE	FISHWELL ACCESS GALLERY	WET WELL WATER LEVEL	100	N/A	75	
PS-3	GAGE PRESSURE	FISHWELL ACCESS GALLERY	FISH WELL WATER LEVEL	100	N/A	75	
DPS-1	DIFFERENTIAL PRESSURE	FISHWELL ACCESS GALLERY	ENTRANCE WELL-WET WELL DIFFERENTIAL WATER LEVEL	100	75	5	
DPS-2	DIFFERENTIAL PRESSURE	FISHWELL ACCESS GALLERY	ENTRANCE WELL-FISH WELL DIFFERENTIAL WATER LEVEL	100	75	5	
DPS-3	DIFFERENTIAL PRESSURE	FISHWELL ACCESS GALLERY	FISH WELL DRAIN SCREEN DIFFERENTIAL PRESSURE	100	5	3.5	

ULTRASONIC LEVEL SENSOR SCHEDULE

MARK	TYPE	LOCATION	SERVICE	MIN SENSED DISTANCE (FT)	MAX SENSED DISTANCE (FT)	BEAM ANGLE	REMARKS
LS-1	WATER LEVEL	TOP OF COFFERDAM OVER EDGE OF TRASHRACK	RESERVOIR WATER LEVEL	5	100	6 DEG	

CYLINDER LINEAR POSITION TRANSDUCER SCHEDULE

MARK	TYPE	LOCATION	SERVICE	QTY.	RANGE OF MOTION (CYLINDER STROKE) (INCHES)	CYLINDER ROD DIAMETER (INCHES)	MAX HYDRAULIC PRESSURE (PSIG)	REMARKS
LPT-1	MAGNETOSTRICTIVE IN-CYLINDER TYPE	INCLINED FISH SCREENS	IFS CONTINUOUS POSITION SENSING	10	84	4	2030	COORDINATE WITH IFS CYLINDERS - SEE M-523
LPT-2	MAGNETOSTRICTIVE IN-CYLINDER TYPE	EMERGENCY GATE	GATE CONTINUOUS POSITION SENSING	1	108	8	1500?	COORDINATE WITH CYLINDER EG-1 - SEE M-601 & M-602
LPT-3	MAGNETOSTRICTIVE IN-CYLINDER TYPE	RADIAL GATE	GATE CONTINUOUS POSITION SENSING	1	120	7	1500?	COORDINATE WITH CYLINDER RG-1 - SEE M-601 & M-602

PROXIMITY SWITCH SCHEDULE

MARK	TYPE	LOCATION	SERVICE	QTY.	MAX EXTERNAL PRESSURE (PSIG)	MAX HYDRAULIC PRESSURE (PSIG)	--	REMARKS
PS-1	IN-CYLINDER EMBEDDED TYPE	BYPASS PORT GATES	GATE FULLY OPEN/FULLY CLOSED POSITION SENSING	10	100	3000	--	TWO SWITCHES PER CYLINDER COORDINATE WITH GATE CYLINDERS - SEE M-542
PS-2	RECTANGULAR SIDE-SENSING TYPE	MITER GATES	GATE FULLY OPEN/FULLY CLOSED POSITION SENSING	20	100	N/A	--	TWO SWITCHES PER GATE LEAF

US Army Corps of Engineers
Seattle District

Symbol	Description	Appr.	Symbol	Date	Description
				/ /	

Designed by:	AMM/EC
Drawn by:	AMM
Checked by:	X
Date:	16 MAR 06
File:	E-56-14-19
Rev.	

U.S.ARMY ENGINEER DISTRICT,SEATTLE
CORPS OF ENGINEERS
SEATTLE, WASHINGTON
Prepared by:

ADDITIONAL WATER STORAGE PROJECT
HOWARD HANSON DAM
GREEN RIVER WASHINGTON

INSTRUMENTATION SCHEDULES

Plate number:
M-605
Sheet of

DATE AND TIME PLOTTED: 07-AUG-2008 12:13
DESIGN FILE: J:\AECDESIGNS\HHAW\Mechanical\HHAWM-605s05.DGN

CRANE HOIST MOTOR SCHEDULE

MARK	DESCRIPTION	TYPE	LOCATION	REFER TO PLATE	SPEED (FPM)	MOTOR DATA				VERTICAL TRAVEL (FT)	REMARKS
						BHP	VOLTS	PHASE	HZ		
H-1	TOWER BRIDGE CRANE	BRIDGE TROLLEY	TOWER AT EL 1245	M-591	45	X	X	X	60	--	ROPE TYPE PER MFR RECOMMENDATION
H-2	TOWER BRIDGE CRANE	HOIST TROLLEY	TOWER AT EL 1245	M-591	X					--	" " "
H-3	TOWER BRIDGE CRANE	HOIST	TOWER AT EL 1245	M-591	X					120	" " "
H-4	AWC GATE JIB CRANE	JIB HOIST	TOWER AT EL 1074	M-590	X					12	" " "
H-5	AWC GATE JIB CRANE	JIB TROLLEY	TOWER AT EL 1074	M-590	X					--	" " "
H-6	VALVE ROOM JIB CRANE	JIB HOIST	TOWER AT EL 1042	M-590	X					24	" " "
H-7	VALVE ROOM JIB CRANE	JIB TROLLEY	TOWER AT EL 1042	M-590	X					--	" " "
H-8	MONORAIL CRANE	MONORAIL HOIST	TOWER AT EL 1042	M-102	(CHAIN)	--	--	--	--	12	" " "

DOGGING DEVICE ACTUATOR SCHEDULE

MARK	TYPE	LOCATION	THRUST LBS	STROKE INCH		MOTOR DATA			REFER TO PLATE	REMARKS
						VOLTS	PHASE	HZ		
DD-1	ELECTRO-MECHANICAL DOUBLE LEAD SCREW	EXST TOWER EL 1185.5	500	7		115	1	60	M-598	PROVIDE WITH MANUFACTURER'S STANDARD CONTROL PACKAGE, THERMAL OVERLOAD CUT-OUT, FRICTION CLUTCH, AND POSITION INDICATION

ELEVATOR SCHEDULE I

TOP LANDING ELEVATION	NUMBER OF STOPS	BOTTOM LANDING ELEVATION	SPEED (FPM)	TYPE	NOM CAPACITY	ELECTRICAL			REMARKS
						V	PHASE	HZ	
1228	13	1042	350	GEARED TRACTION	4000 LBS	480	3	60	HOISTWAY DIMENSIONS: 9'-8" x 8'-0" (NOTE 1) AFTER ACCOUNTING FOR SEISMIC; THYSSEN-KRUPP SPF-40 OR EQUAL

NOTE (1): CONTRACTOR SHALL FIELD VERIFY AND COORDINATE ALL DIMENSIONS PERTAINING TO ELEVATOR FIT AND FUNCTION INTO CONCRETE STRUCTURE.

ELEVATOR SCHEDULE II

TYPE	PASSENGER
HOISTWAY ENTRANCES	CENTER OPENING (PWD.)
CAR DOOR	CENTER OPENING (PWD.)
CAR GUIDE TYPE	ROLLER
MACHINE RM ELEVATION	EL 1245
CONTROL	VVVF
HOIST ROPE	SEALE TRACTION STEEL
GOVERNOR ROPE	IRON
COMPENSATION CHAIN	(2) WF15 (1.5 LBS./FT.) PER CHAIN
CAR BUFFER TYPE	(1) OIL
CAR BUFFER STROKE	8 1/2 INCH
CWT. BUFFER TYPE	(1) OIL
CWT. BUFFER STROKE	8 1/2 INCH
TOTAL FILLER WEIGHT	5,065 LBS.
TOTAL CWT. WEIGHT (45 %)	5,535 LBS.
TOTAL CAR WEIGHT	3,640 LBS.
EST. CAB WEIGHT & TYPE WITH DOOR OPERATOR	1,580 LBS.
MACHINE WEIGHT	2,360 LBS.
CAR GUIDE RAILS	15 LBS./FT.
CWT. GUIDE RAILS	□ 8 LBS./FT. | □ C12 (℄)

US Army Corps of Engineers
Seattle District

Symbol	Description	Appr.	Date
			/ /

Designed by: DJB
Drawn by: DJB
Checked by: X
Date: 16 MAR 06
File • E-56-14-19
Rev.

U.S.ARMY ENGINEER DISTRICT,SEATTLE
CORPS OF ENGINEERS
SEATTLE, WASHINGTON
Prepared by:

ADDITIONAL WATER STORAGE PROJECT
HOWARD HANSON DAM
GREEN RIVER WASHINGTON

MISCELLANEOUS SCHEDULES

Plate number:
M-606
Sheet of

DESIGN FILE: P:\AECDESIGNS\HHAW\Mechanical\HHAWM-606606.DGN
DATE AND TIME PLOTTED: 07-AUG-2008 12:14

LEGEND:

→ WATER FLOW DIRECTION

NOTES:

1. THIS SHEET ILLUSTRATES SINGLE FISH COLLECTOR OPERATION WITH FISH COLLECTOR NUMBER 3 OPERATING AS AN EXAMPLE. DUAL FISH COLLECTOR OPERATION WOULD INVOLVE FLOW THROUGH TWO FISH COLLECTORS AND THE ASSOCIATED BYPASS CONDUITS. FLOW THROUGH MORE THAN TWO COLLECTORS IS NOT ADVISED.

2. NET INFLOW INTO OPERATING FISH COLLECTORS IS EQUAL TO THE NET AWC OUTFLOW.

3. NET BYPASS FLOW THROUGH OPERATING FISH BYPASS CONDUITS IS EQUAL TO THE FISH WELL DRAIN FLOW.

NUMBER OF OPERATING FISH COLLECTORS	1	2
BYPASS FLOW RATE PER OPERATING FISH COLLECTOR	25-35 CFS	
NET BYPASS FLOW	25-35 CFS	50-70 CFS
NET AWC OUTFLOW	200-600 CFS*	600-1200 CFS
FLOW RATE THROUGH IFS PER OPERATING COLLECTOR	175-575 CFS	275-575 CFS

*BASED ON FISH COLLECTOR HORN FLOW RANGE FROM 200-600 CFS FROM 65% DDR H&H DESIGN CRITERIA

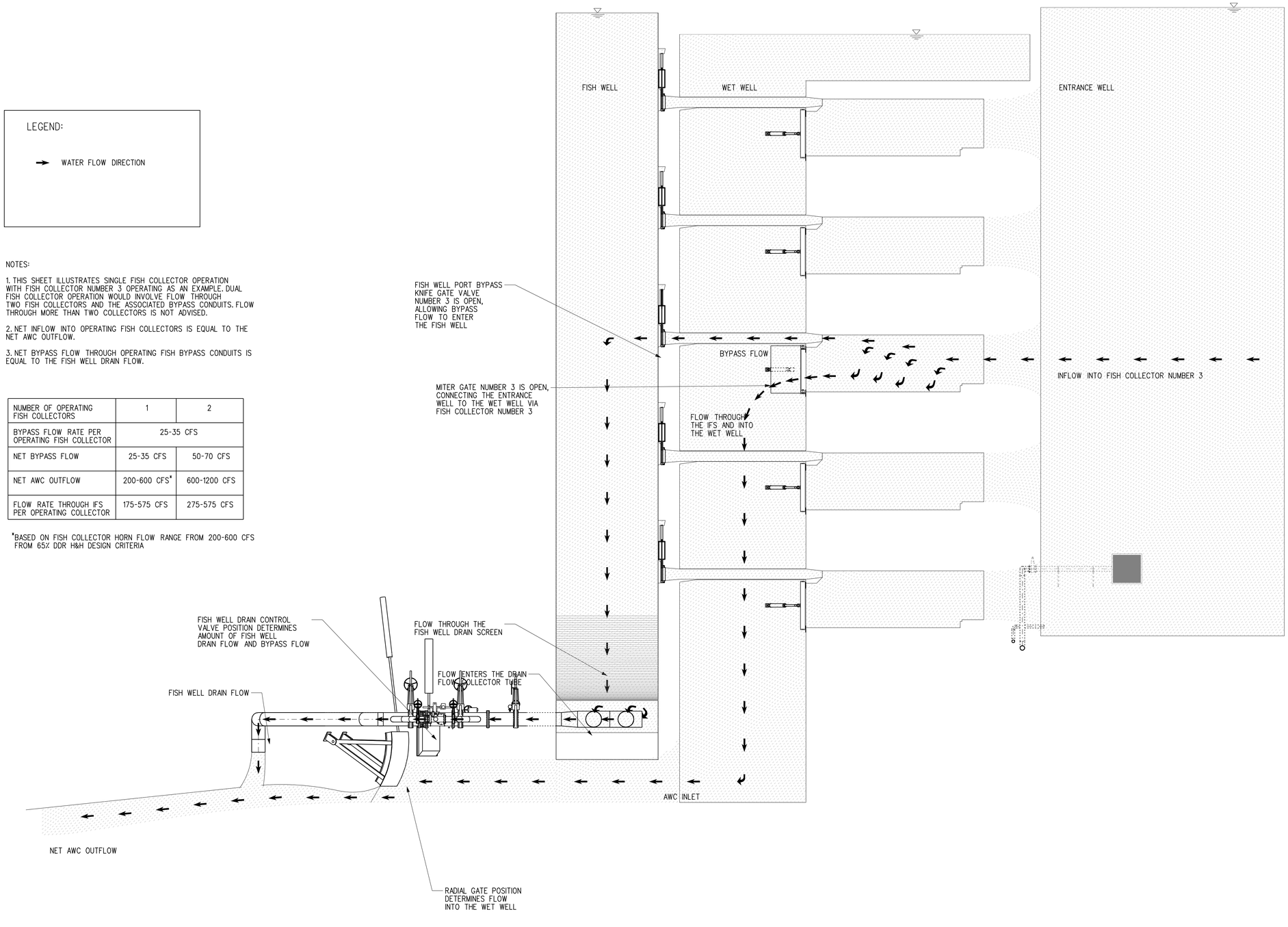

US Army Corps of Engineers
Seattle District

Symbol	Description	Date	Appr.	Symbol	Description
		/ /			

Designed by: EC
Drawn by: EC
Checked by: X
Date: 16 MAR 06
File: E-56-14-19
Rev.

U.S.ARMY ENGINEER DISTRICT,SEATTLE
CORPS OF ENGINEERS
SEATTLE, WASHINGTON
Prepared by:

ADDITIONAL WATER STORAGE PROJECT
HOWARD HANSON DAM

FISH PASSAGE FACILITY
FLOW SCHEMATIC 1

GREEN RIVER WASHINGTON

Plate number:
M-701
Sheet of

DESIGN FILE: J:\AECDESIGNS\HHAW\Mechanical\HHAWM-701FL1.DGN
DATE AND TIME PLOTTED: 07-AUG-2008 12:14

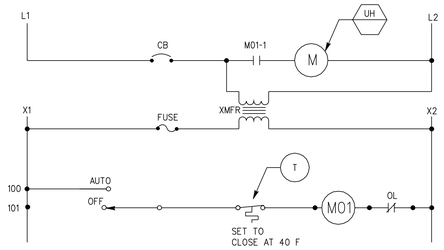

UNIT HEATER FAN STARTER

UNIT-HEATER (UH-1 THRU UH-12)

A WALL-MOUNTED THERMOSTAT WITH AN "AUTO-OFF" SWITCH LOCATED AS SHOWN SHALL CYCLE THE FAN TO MAINTAIN ITS SETPOINT AS SHOWN WHEN THE SWITCH IS IN THE "AUTO" POSITION.

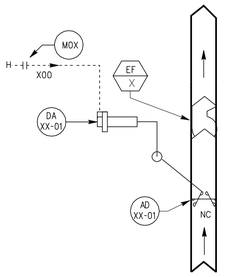

EXHAUST FAN CONTROL SCHEMATIC
TYPICAL

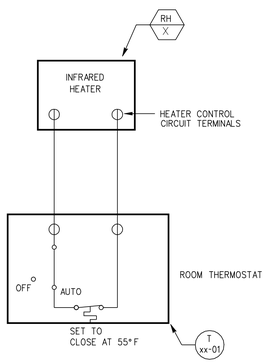

INFRARED RADIANT HEATER CONTROL SYSTEM

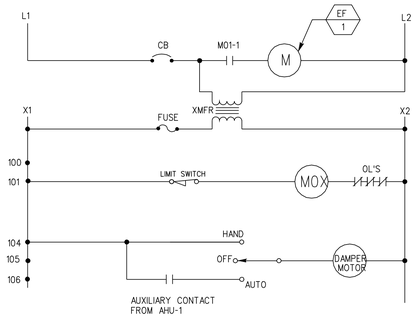

EXHAUST FAN EF-1 STARTER

EXHAUST FAN (EF-1)

DESCRIPTION: EXHAUST FAN FOR ROOMS AT EL 1245, 1228, 1216, 1181, 1163 INTERLOCKED WITH AHU-1.

A "HAND-OFF-AUTO" SWITCH SHALL BE USED TO OPERATE THE FAN TO PROVIDE EXHAUST VENTILATION. IN THE "HAND" POSITION, THE FAN SHALL RUN AT ALL TIMES. IN THE "AUTO" POSITION, THE FAN SHALL BE INTERLOCKED WITH AHU-1.

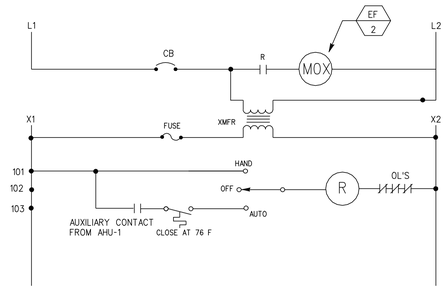

EXHAUST FAN EF-2 STARTER

EXHAUST FAN (EF-2)

DESCRIPTION: EXHAUST FAN FOR GENERAL EXHAUST IN THE ELEVATOR SHAFT. INTERLOCKED WITH AHU-1; OPERATES WHEN AHU-1 IS ENERGIZED TO PROVIDE VENTILATION AS SHOWN. A "HAND-OFF-AUTO" SWITCH SHALL BE USED TO OPERATE THE FAN TO PROVIDE EXHAUST VENTILATION. IN THE "HAND" POSITION, THE FAN SHALL RUN AT ALL TIMES. IN THE "AUTO" POSITION, THE FAN SHALL BE INTERLOCKED WITH:

A WALL MOUNTED THERMOSTAT LOCATED INSIDE THE ELEVATOR MACHINE ROOM WHICH SHALL CYCLE THE FAN TO MAINTAIN ITS SETOINT AS SHOWN SO LONG AS AHU-1 IS ENERGIZED.

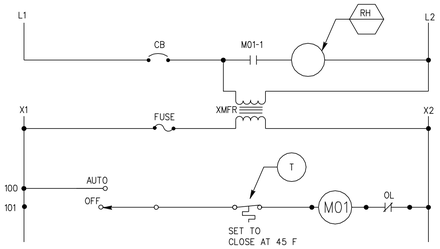

RADIANT HEATER STARTER

INFRARED-HEATER (RH-1 THRU RH-8)

A MICROPROCESSOR BASED 7 DAY PROGRAMMABLE THERMOSTAT SHALL CONTROL THE INFRARED HEATER. WHEN THE SWITCH IS IN THE "ON" POSITION, THE THERMOSTAT SHALL CYCLE THE INFRARED HEATER TO MAINTAIN THE SETPOINT AS SHOWN.

SEE SPEC. INITIAL Tstat SETTINGS SHALL BE:

MON-FRI 0700-1600 OCCUPIED TEMP = 55F
ALL OTHER HOURS TEMP = 45F

SEQUENCE OF OPERATION (AHU-1)

NOTE: The supply fan inside AHU-1 is designated on the drawings as SF-1; the return fan inside AHU-1 is designated on the drawings as RF-1. See HVAC flow balancing diagram on plate M-760.

Occupied, Unoccupied, and Ventilation-Delay Operating Modes

Ventilation-delay-mode timing shall start prior to the occupied-mode timing. The DDC system shall prevent the outside-air damper from opening. At the time shown, the DDC system shall place the system in the occupied mode. At the expiration of the ventilation-delay-mode timing period, the DDC system shall allow the outside-air damper to open. At the time shown, the DDC system shall place the control system in the unoccupied mode of operation. EF-1 shall be interlocked to operate during AHU-1 occupied mode.

Outside-Air, and Return-Air Dampers

Occupied Mode - The outside-air, and return-air dampers shall be under space temperature control.

Unoccupied and Ventilation-Delay Modes - The dampers shall return to their normal positions.

Supply-Fan Control

Occupied and Ventilation-Delay Modes - Supply fan shall start, and shall operate continuously. During occupied mode, EF-1 and EF-2 shall operate.

Unoccupied Mode - The supply fan shall cycle according to the night setback schedule. The fan shall start and stop at the setpoints as shown.

Filter

The DDC panel shall monitor the differential pressure switch across the filter and shall provide an alarm when the pressure drop exceeds the setpoint.

Freeze Protection

All Modes - A freezestat, located as shown, shall stop the supply fan, cause the outside-air, and return-air, dampers to return to their normal position, and shall initiate a low-temperature alarm if the temperature drops below the freezestat's setpoint as shown. Return to the normal mode of operation shall require manual reset at the freezestat. The DDC panel shall monitor the freezestat through auxiliary contacts and shall indicate an alarm condition when the freezestat trips.

Space Temperature Control

A space-temperature sensing element and transmitter operating through the DDC system shall first gradually shut off the heating coil. After passing through a deadband, the DDC system shall then gradually operate the outside-air damper to admit outside air beyond the minimum quantity to maintain the setpoint as shown.

Smoke Control

All Modes - Smoke Detectors in the supply-air and return-air ductwork shall stop the supply fan and initiate a smoke alarm at the Fire Alarm Control Panel if smoke is detected at either location. Restarting the supply fan shall require manual reset at the smoke detector.

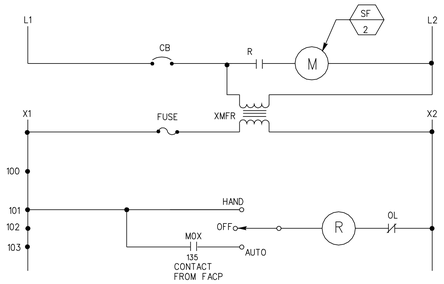

SUPPLY FAN SF-2 STARTER

SUPPLY FAN (SF-2)

DESCRIPTION: SUPPLY FAN FOR PRESSURIZATION OF STAIRWELL; INTERLOCKED WITH FIRE ALARM CONTROL PANEL.

A "HAND-OFF-AUTO" SWITCH SHALL BE USED TO OPERATE THE FAN IN THE "HAND" POSITION, THE FAN SHALL RUN AT ALL TIMES. IN THE "AUTO" POSITION, THE FAN SHALL BE INTERLOCKED WITH THE FACP TO OPERATE DURING AN ALARM MODE.

US Army Corps of Engineers
Seattle District

Symbol	Description	Date	Appr.	Symbol	Description
		/ /			

Date: 16 MAR 06
File: E-56-14-19
Rev.

Designed by: DJB
Drawn by: DJB
Checked by:

U.S.ARMY ENGINEER DISTRICT,SEATTLE
CORPS OF ENGINEERS
SEATTLE, WASHINGTON
Prepared by:

ADDITIONAL WATER STORAGE PROJECT
HOWARD HANSON DAM
MISC CONTROLS I
GREEN RIVER WASHINGTON

Plate number:
M-755
Sheet of

FILE= J:\AECDESIGNS\HHAW\Mechanical\HHAWM-755ctl.DGN
DESIGN FILE= 12:14
DATE AND TIME PLOTTED= 07-AUG-2008

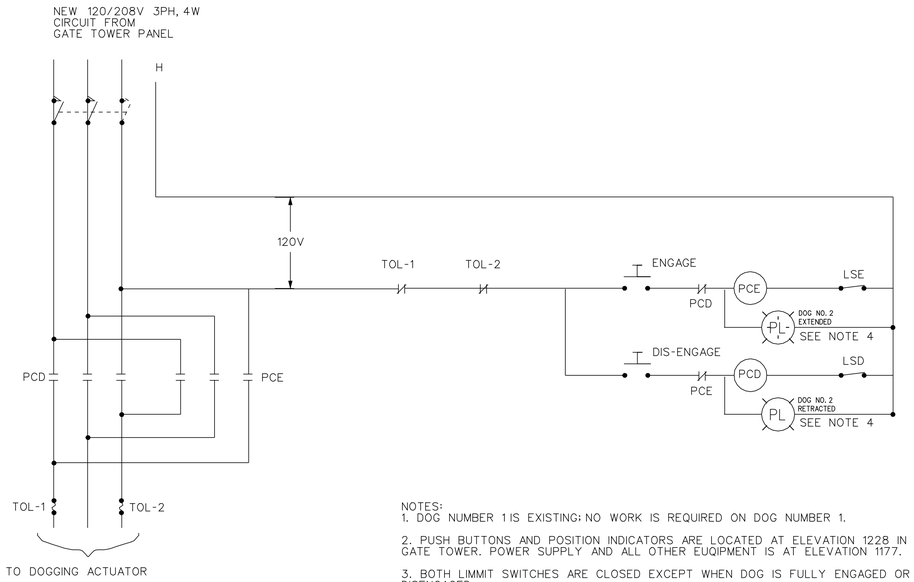

NOTES:
1. DOG NUMBER 1 IS EXISTING: NO WORK IS REQUIRED ON DOG NUMBER 1.

2. PUSH BUTTONS AND POSITION INDICATORS ARE LOCATED AT ELEVATION 1228 IN GATE TOWER. POWER SUPPLY AND ALL OTHER EUQIPMENT IS AT ELEVATION 1177.

3. BOTH LIMMIT SWITCHES ARE CLOSED EXCEPT WHEN DOG IS FULLY ENGAGED OR FULLY DISENGAGED.

4. PROVIDE TWO SETS OF DOG POSITION INDICATOR LIGHTS: ONE AT THE EXISTING GATE CONTROL PANEL & ONE ON THE NEW DOG ACTUATOR CONTROL PANEL.

ABBREVIATIONS

TOL	THERMAL OVERLAOD RELAY
PCE	POWER CONTACTOR, ENGAGE DOG
PCD	POWER CONTACTOR, DISENGAGE DOG
LSE	LIMIT SWITCH, OPEN WHEN DOG ENGAGED
LSD	LIMIT SWITCH, OPEN WHEN DOG DISENGAGED

SYMBOLS

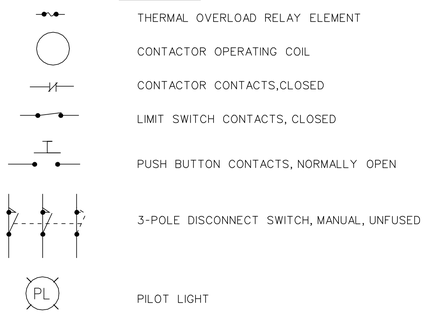

- THERMAL OVERLOAD RELAY ELEMENT
- CONTACTOR OPERATING COIL
- CONTACTOR CONTACTS,CLOSED
- LIMIT SWITCH CONTACTS, CLOSED
- PUSH BUTTON CONTACTS, NORMALLY OPEN
- 3-POLE DISCONNECT SWITCH, MANUAL, UNFUSED
- PILOT LIGHT

EXISTING WARNING LIGHT FUNCTION

WARNING LIGHT	QTY	FUNCTION
DOG ENGAGED	1	ACTIVATED WHEN THE EMERGENCY GATE DOG IS ENGAGED (EXTENDED)
DOG DIS-ENGAGED	1	ACTIVATED WHEN THE EMERGENCY GATE DOG IS DISENGAGED (RETRACTED)
DOGGING MOTOR RUNNING	1	ACTIVATED WHEN THE EMERGENCY GATE DOGGING DEVICE ACTUATOR IS MOVING AND IS BETWEEN OPERATING POSITIONS

EXISTING DOGGING DEVICE STATUS LIGHTS

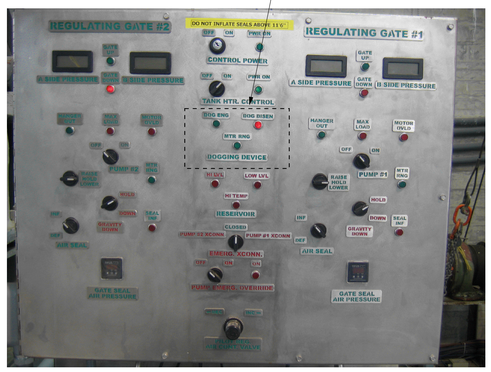

EXISTING GATE CONTROL PANEL
NOT TO SCALE

EXISTING GATE CONTROL PANEL
NOT TO SCALE

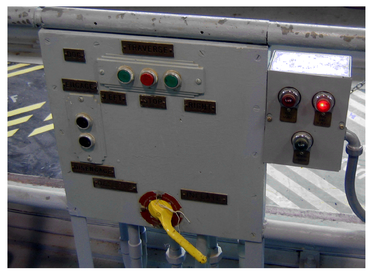

EXISTING DOG ACTUATOR CONTROL PANEL
NOT TO SCALE

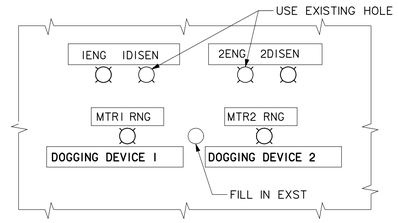

EXST GATE CONTROL PANEL MOD
NOT TO SCALE

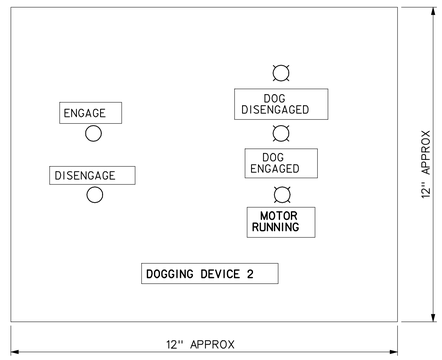

NOTE: VERIFY AND ADJUST DIMENSIONS BASED ON CONDITIONS FOUND IN THE FIELD

NEW DOG #2 ACTUATOR CONTROL PANEL
NOT TO SCALE

US Army Corps of Engineers
Seattle District

Symbol	Description	Appr.	Date
			/ /

Designed by: DJB
Drawn by: DJB
Checked by:
Date: 16 MAR 06
File: E-56-14-19
Rev.

U.S.ARMY ENGINEER DISTRICT,SEATTLE
CORPS OF ENGINEERS
SEATTLE, WASHINGTON
Prepared by:

ADDITIONAL WATER STORAGE PROJECT
HOWARD HANSON DAM
MISC CONTROLS II
GREEN RIVER WASHINGTON

Plate number:
M-756
Sheet of

DESIGN FILE: J:\AECDESIGNS\HHAWA\Mechanical\HHAWM-756c12.DGN
DATE AND TIME PLOTTED: 07-AUG-2008 12:15

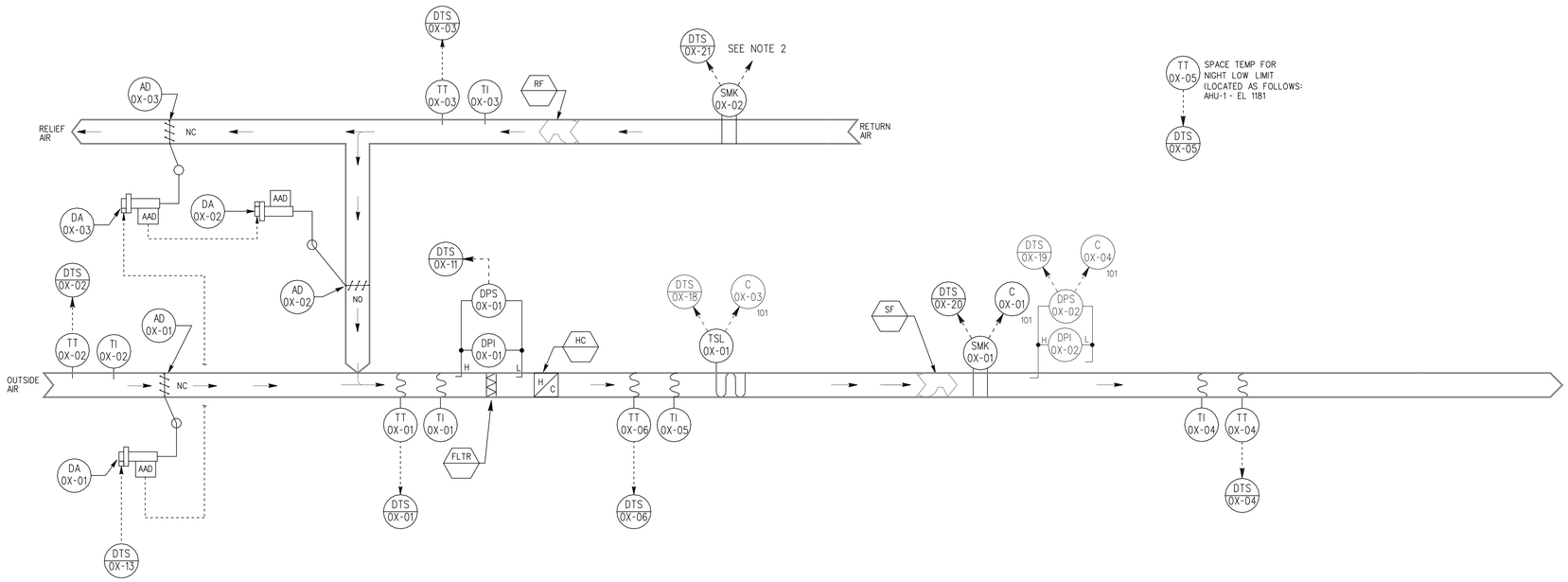

CONTROL SYSTEM SCHEMATIC (AHU-1)

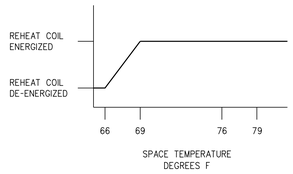

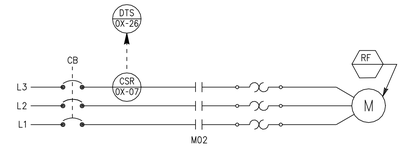

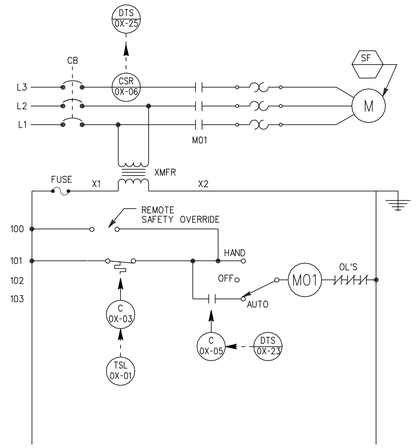

FAN STARTERS

	HARDWARE																			
	OUTPUT								INPUT											
	DIGITAL					ANALOG			DIGITAL					ANALOG					
	CONTROL RELAY					POSITION ADJUSTMENT			AUXILIARY CONTACT	CURRENT SENSING RELAY				TEMPERATURE			PSIG, PSIA, PSID	FLOW	
SUPPLY FAN	1									1										
RETURN FAN										1										
SUPPLY AIR														1			1	1		
RETURN AIR														1				1		
MIXED AIR														1						
OUTSIDE AIR														1						
PREHEATED AIR														1						
MIXED AIR DAMPERS						1														
FILTER									1											
SPACE TEMP (NIGHT LOW LIMIT)														1						
									1											
FREEZESTAT									1											
SMOKE DETECTOR									2											

CONTROL DAMPER SCHEDULE

IDENTIFIER	FUNCTION	TYPE	SIZE	RANGE	REMARKS
AD-0X-01	OUTSIDE AIR	MODULATING	WW" X HH"	4-20 mA	PARALLEL BLADE
AD-0X-02	RETURN AIR	MODULATING	WW" X HH"	↓	PARALLEL BLADE
AD-0X-03	RELIEF AIR	MODULATING	WW" X HH"	↓	PARALLEL BLADE

OPERATING PARAMETERS

FUNCTION	SETPOINT	REMARKS
MINIMUM OUTSIDE AIR		SEE SCHEDULE ON PLATE M0.4
MIXED AIR TEMPERATURE		1000 OHMS @ 60 F
PREHEATED AIR TEMPERATURE	60 °F	
SUPPLY AIR TEMPERATURE	60 °F	
SPACE TEMP. (NIGHT SETBACK)	50 °F	68 °F (HEATING) 50 °F NIGHT SETBACK (HEATING ONLY)
OCCUPIED MODE		MONDAY - FRIDAY (EXCEPT HOLIDAYS) 0700 HRS -1600 HRS
VENT DELAY MODE		MONDAY - FRIDAY (EXCEPT HOLIDAYS) 0655 HRS -0800 HRS
FREEZESTAT	40 °F	
FILTER ALARM	0.5 IN. WATER	

DDC DATA TERMINAL STRIP (DTS) LAYOUT

TERMINAL NO.	DEVICE NO.	DESCRIPTION	TYPE
1	TT-0X-01	MIXED AIR TEMPERATURE	AI
2	TT-0X-02	OUTSIDE AIR TEMPERATURE	AI
3	TT-0X-03	RETURN AIR TEMPERATURE	AI
4	TT-0X-04	SUPPLY AIR TEMPERATURE	AI
5	TT-0X-05	SPACE TEMP (NTE LOW LIMIT)	AI
6	TT-0X-06	PREHEATED AIR TEMPERATURE	AI
7			AI
8	FT-0X-01	SUPPLY AIR FLOW	AI
9	FT-0X-02	RETURN AIR FLOW	AI
10			
11	DPS-0X-01	FILTER ALARM	DI
12			
13	DA-0X-01	OUTSIDE/RELIEF/MIXED AIR DAMPERS	AO
14			AO
15			AO
16			AO
17			AO
18	TSL-0X-01	FREEZESTAT	DI
19			DI
20	SMK-0X-01	SUPPLY AIR SMOKE DETECTOR	DI
21	SMK-0X-02	RETURN AIR SMOKE DETECTOR	DI
22			
23	C-0X-05	SUPPLY FAN START/STOP	DO
24			
25	CSR-0X-06	SUPPLY FAN STATUS	DI
26	CSR-0X-07	RETURN FAN STATUS	DI
27			
28			
29			
30			

NOTE: TERMINAL NUMBERS SHALL BE DETERMINED BY THE CONTROLS CONTRACTOR & NOTED ON THE AS-BUILTS

SENSOR SCHEDULE

IDENTIFIER	FUNCTION	RANGE
TT-0X-01	MIXED AIR TEMPERATURE TRANSMITTER	40 °F TO 140 °F
TT-0X-02	OUTSIDE AIR TEMPERATURE TRANSMITTER	-30 °F TO +130 °F
TT-0X-03	RETURN AIR TEMPERATURE TRANSMITTER	40 °F TO 140 °F
TT-0X-04	SUPPLY AIR TEMPERATURE TRANSMITTER	40 °F TO 140 °F
TT-0X-05	SPACE TEMPERATURE TRANSMITTER	50 °F TO 85 °F
TT-0X-06	PREHEATED AIR TEMPERATURE TRANSMITTER	40 °F TO 140 °F

NOTES:

1. SEE PLATE M-755 FOR SEQUENCE OF OPERATION FOR AHU-1.

2. SMOKE DETECTORS SHALL BE RESET FROM THE FIRE ALARM CONTROL PANEL ONLY. MANUAL RESET AT THE DEVICE AND/OR AT THE DDC PANEL SHALL NOT BE PROVIDED.

US Army Corps of Engineers
Seattle District

Symbol	Description	Date	Appr.	Symbol	Description
		/ /			

Designed by: DJB
Drawn by:
Checked by:
Prepared by:

Date: 16 MAR 06
File: E-56-14-19
Rev.

U.S.ARMY ENGINEER DISTRICT,SEATTLE
CORPS OF ENGINEERS
SEATTLE, WASHINGTON

ADDITIONAL WATER STORAGE PROJECT
HOWARD HANSON DAM
AHU CONTROL SCHEMATIC
GREEN RIVER WASHINGTON

Plate number:
M-760
Sheet of

DESIGN FILE= I:\AEDESIGNS\HHAW\Mechanical\HHAWM-760cl2.DGN
DATE AND TIME PLOTTED: 07-AUG-2008 12:15

LEGEND

INTERIOR

LIGHTING FIXTURES. SEE DETAILS FOR FIXTURE TYPES, MOUNTING HEIGHTS AND ACCESSORIES. "E" SUBSCRIPT NEXT TO FIXTURE INDICATES EMERGENCY LIGHTING FIXTURE

EXIT SIGN, CEILING MOUNTED WITH DIRECTIONAL ARROWS

EXIT SIGN WALL MOUNTED

SINGLE RECEPTACLE, SPECIAL PURPOSE

GFI DUPLEX RECEPTACLE, NEMA 5-20R, 18" AFF UNLESS OTHERWISE NOTED. SUBSCRIPTS INDICATE TYPE AS FOLLOWS AND CAN BE USED TOGETHER:
GFI - GROUND FAULT CIRCUIT INTERRUPTER
C - MOUNT 6" ABOVE COUNTER, UON
WP - WEATHERPROOF ENCLOSURE

QUAD RECEPTACLE, NEMA 5-20R, 18" AFF, UON

F DISCONNECT SWITCH WITH AMPS/POLE/NEMA TYPE
30/3/1 F - FUSE AND SWITCH PER MANUFACTURER'S RECOMMENDATIONS

(J) JUNCTION BOX

SMOKE DETECTOR

HEAT DETECTOR, COMBINATION FIXED TEMPERATURE RATE-OF-RISE

W 2 JACK TELEPHONE OUTLET
W=WALL MOUNT, 54 INCHES AFF

CONDUIT UP

INTERIOR

CIRCUIT CROSS HATCHES INDICATE WIRE QUANTITY (LONG CROSS HATCH NOTES NEUTRAL WIRE). EXCEPT WHERE NOTED OTHERWISE, CONDUCTORS SHALL BE NO. 12 AWG AND CONDUIT SHALL BE 1/2" TRADE SIZE. HATCHES SHOWN WHEN MORE THAN TWO CONDUCTORS. GROUND CONDUCTOR IS NOT INCLUDED IN COUNT. PROVIDE GROUND CONDUCTOR IN ALL CONDUITS.

HOME RUN TO PANEL

RACEWAY TURNING UP

RACEWAY EXPOSED

FLEXIBLE METAL CONDUIT

GROUND ROD

DDC DIRECT DIGITAL CONTROLLER CONNECTION
RE: MECHANICAL DRAWINGS

POWER PANEL, SEE PANEL SCHEDULES FOR DETAILS. TEXT IF ANY IDENTIFIES PANEL CALLOUT OR INFORMATION. FOR EXAMPLE:
FACP - FIRE ALARM CONTROL PANEL
XMTR - TRANSMITTER
SWB - SWITCHBOARD
LCP - LIGHTING CONTROL PANEL

S_{3a} WALL SWITCH, 48" AFF. PREFIX INDICATES QUANTITY, IF MORE THAN 1. LOWER CASE SUBSCRIPT INDICATES SWITCHING. UPPER CASE SUBSCRIPT INDICATES TYPE.

(NO SUBSCRIPT) : SINGLE POLE
2 : TWO POLE
3 : THREE POLE
HP : MOTOR RATED
X : LISTED FOR CLASS I DIV II
pb : ON/OFF PUSHBUTTON CONTROL STATION
MS : MOTION SENSOR

PHOTO ELECTRIC CELL

EQUIPMENT CONNECTION

T2 TRANSFORMER AND DESIGNATION, INTERIOR

(M) MOTOR CONNECTION

ABBREVIATIONS

AC	AERIAL CONDUCTOR
AFF	ABOVE FINISHED FLOOR
AFG	ABOVE FINISHED GRADE
AFC	ARC-FAULT CIRCUIT BREAKER
ATS	AUTO TRANSFER SWITCH
AWG	AMERICAN WIRE GAUGE
BC	BARE COPPER
CB	CIRCUIT BREAKER
CO	CONDUIT ONLY
CPU	CENTRAL PROCESSING UNIT
CT	CURRENT TRANSFORMER
DB	DIRECT BURIAL
DF	DRINKING FOUNTAIN
EXST	EXISTING
ECP	ELEVATOR CONTROL PANEL
EMT	ELECTRICAL METALIC TUBING
FL	FLUORESCENT
GFCI	GOVERNMENT FURNISHED, CONTRACTOR INSTALLED
GFI	GROUND FAULT CIRCUIT INTERRUPTER
GFGI	GOVERNMENT FURNISHED, GOVERNMENT INSTALLED
GND	GROUND
HD	HAIR DRYER
HOA	HAND - OFF - AUTO
IAW	IN ACCORDANCE WITH
IG	ISOLATED GROUND
LCR	LIGHTING CONTROL RELAY
NAC	NOTIFICATION APPLIANCE CIRCUIT
NIC	NOT IN CONTRACT
MCB	MAIN CIRCUIT BREAKER
OISC	OIL INSULATED SELF COOLED
PC	PERSONAL COMPUTER
PIR	PASSIVE INFRARED OCCUPANCY SENSOR
PIV	POST INDICATOR VALVE
PT	POTENTIAL TRANSFORMER
RGS	RIGID GALVANIZED STEEL
RF	ROOF MOUNTED, GFI IN WEATHER PROOF ENCLOSURE
SWB	SWITCHBOARD
TVSS	TRANSIENT VOLTAGE SURGE SUPRESSOR
UON	UNLESS OTHERWISE NOTED
WP	WEATHERPROOF
GFP	GROUND FAULT PROTECTION
P	POWER
T	TELEPHONE

EXTERIOR

M MANHOLE/VAULT
M POWER
T TELEPHONE

TRANSFORMER, EXTERIOR

J ABOVE GROUND JUNCTION PEDESTAL

--PT-- EXISTING

--PT-- NEW

SCHEMATICS AND ONE LINE

SURGE ARRESTER

FUSE

SPLICE

GROUND

LIGHT

(R) RELAY

TRANSFORMER

(G) GENERATOR

SEPARABLE CONNECTION

CIRCUIT BREAKER TRIP AMPS AND POLES AS NOTED

CURRENT TRANSFORMER

POTENTIAL TRANSFORMER

(M) METER
KWH - KILOWATT HOUR/ DEMAND METER
VM - VOLT
AM - AMPERE

(GFR) GROUND FAULT RELAY

CONTACTS

SWITCH

FUSED CUTOUT

3-WAY SWITCH/ TRANSFER SWITCH

OVERLOAD RELAY

TERMINAL STRIP CONNECTION

(C) CONTACTOR COIL

(T) TIMER

[S] SELECTOR SWITCH

GENERAL NOTES:

1. COORDINATE WITH MECHANICAL CONTRACTOR AND OTHER EQUIPMENT SUPPLIERS TO DETERMINE EXACT LOCATION AND TYPE OF ELECTRICAL CONNECTION FOR EQUIPMENT SUPPLIED. PROVIDE THE APPROPRIATE CONNECTION. MOTOR STARTERS, OVERLOAD PROTECTION, AND OTHER CONTROLS FOR MOTOR DRIVEN EQUIPMENT SHALL BE PROVIDED AND SHALL BE FIELD WIRED IAW MANUFACTURER'S INSTRUCTIONS.

2. PROVIDE SEISMIC PROTECTION FOR ELECTRICAL EQUIPMENT IAW SPECIFICATION SECTION 16070, SEISMIC PROTECTION FOR ELECTRICAL EQUIPMENT.

US Army Corps of Engineers
Seattle District

Symbol	Description	Date	Appr.	Symbol	Description
		/ /			

Designed by: LAM
Drawn by: BAZE
Checked by: MASTEN
Prepared by:
Date: 16 MAR 06
File: E-56-14-19
Rev.

U.S.ARMY ENGINEER DISTRICT, SEATTLE
CORPS OF ENGINEERS
SEATTLE, WASHINGTON

ADDITIONAL WATER STORAGE PROJECT
HOWARD HANSON DAM
GREEN RIVER WASHINGTON

LEGEND AND ABBREVIATIONS

Plate number:
E-001
Sheet of

DATE AND TIME PLOTTED: 07-AUG-2008 12:15
DESIGN FILE: I:\ACEDESIGNS\HHAWE_001LEG.DGN

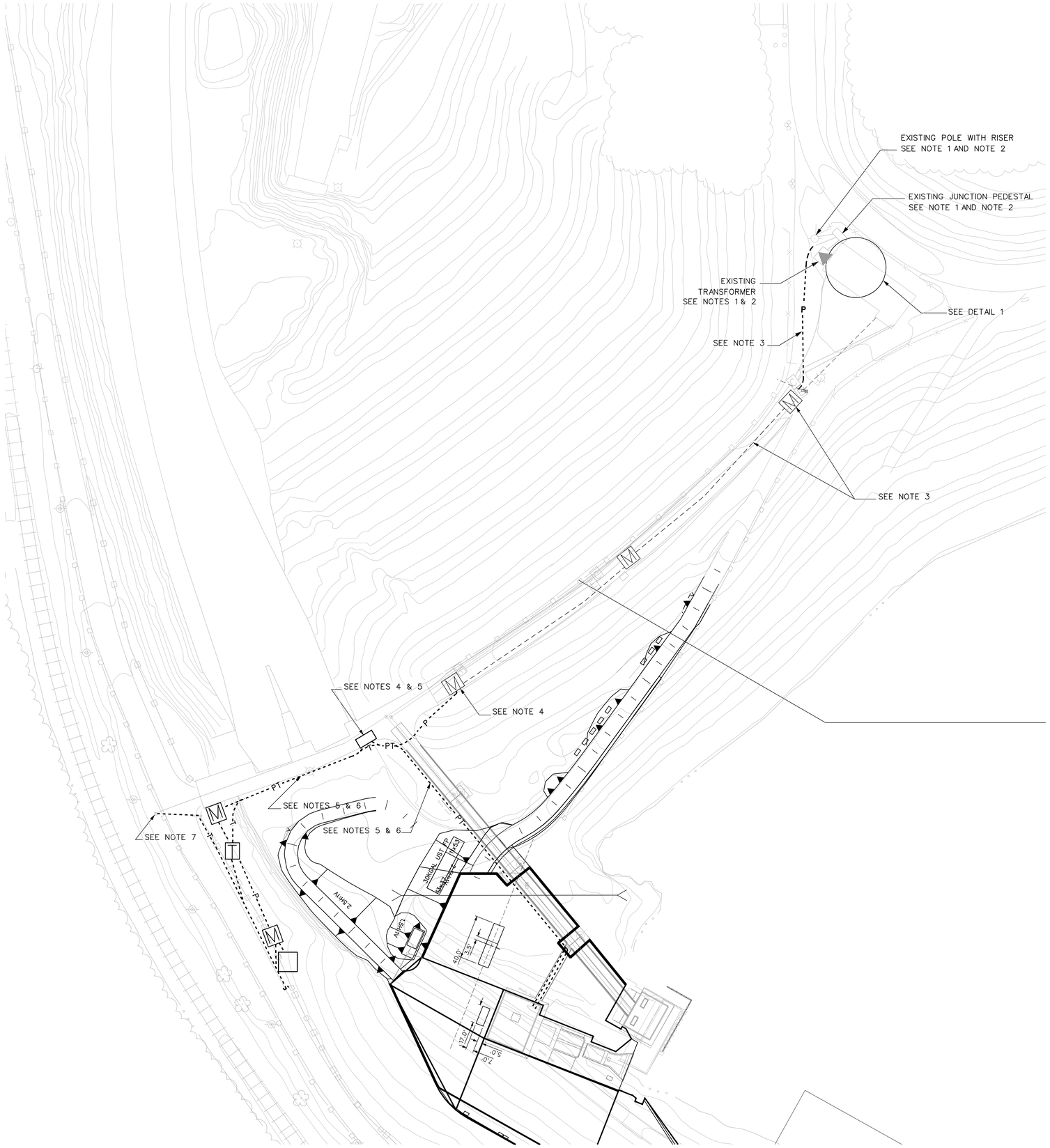

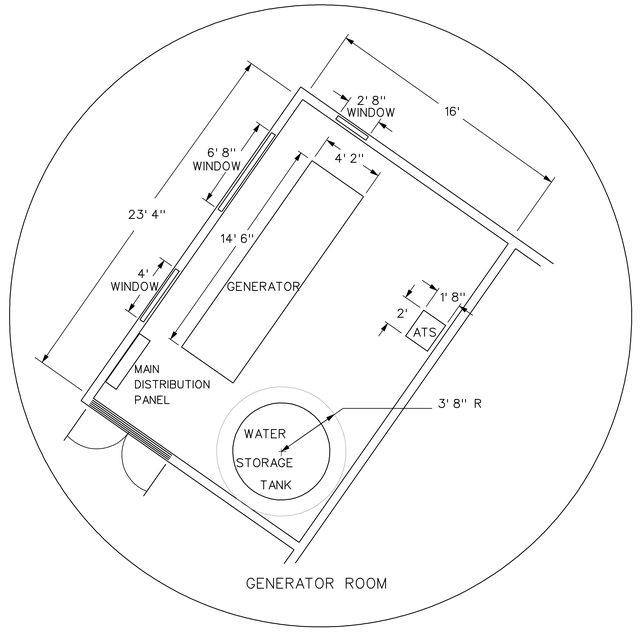

DETAIL I
NO SCALE

NOTES:

1. POLE, RISER, JUNCTION PEDESTAL, AND TRANSFORMER ARE EXISTING. INTERCEPT PRIMARY TO JUNCTION PEDESTAL AND ROUTE TO ATS SHOWN IN DETAIL 1. REFER TO ONE-LINE DIAGRAM, PLATE E-601 FOR CONDUIT AND CONDUCTOR SIZE.

2. PROTECT EXISTING PRIMARY CONDUCTORS FOR REUSE. ROUTE NEW SECONDARY CONDUCTORS TO MAIN DISTRIBUTION PANEL SHOWN IN DETAIL 1. REFER TO ONE-LINE DIAGRAM, PLATE E-601 FOR CONDUIT AND CONDUCTOR SIZE.

3. ROUTE NEW PRIMARY FEEDER IN EXISTING MANHOLES AND DUCT BANK.

4. FROM EXISTING MANHOLE, EXTEND 4 - 4" CONDUITS TO NEW POWER PULLBOX. ROUTE CONDUITS UNDER BRIDGE DECK. PULLBOX SHALL BE MOUNTED ON TOP OF BRIDGE DECK.

5. RUN 2 CONDUITS ALONG EXTERIOR SIDE OF BRIDGE DECK WALL TO NEW TOWER. CONDUITS SHALL BE RIGID GALVANIZED STEEL.

6. FROM THE TOWER RUN 2 - 4" CONDUITS EXPOSED ALONG EXTERIOR SIDE OF BRIDGE DECK WALL AND ALONG SIDE OF SPILLWAY BRIDGE TO NEW TELEPHONE HANDHOLE.

7. STUBUP ONE 4" CONDUIT AT BASE OF EXISTING QWEST POLE. ROUTE CONDUIT OVER TO NEW DUCT BANK. PROVIDE A PULL WIRE IN THE CONDUIT.

N

1" = 40' 40' 20' 0 40' 80'

US Army Corps of Engineers
Seattle District

Symbol	Description	Date	Appr.	Symbol	Description
		/ /			

Designed by: MASTEN
Drawn by: BAZE
Prepared by: MASTEN
Date: 16 MAR 06
File • E-56-14-19
Rev.

U.S.ARMY ENGINEER DISTRICT, SEATTLE
CORPS OF ENGINEERS
SEATTLE, WASHINGTON
Prepared by:

ADDITIONAL WATER STORAGE PROJECT
HOWARD HANSON DAM
GREEN RIVER WASHINGTON

SITE PLAN

Plate number:
E-002
Sheet of

DESIGN FILE: I:\AECDESIGNS\HHAW\Electrical\HHAWE-002SP1.DGN
DATE AND TIME PLOTTED: 07-AUG-2008 12:23

NOTES:

1. ALL CONDUIT SHALL BE ROUTED EXPOSED. MOUNT CONDUIT ON CHANNEL STEEL, NOT DIRECTLY TO CONCRETE WALLS. REFER TO DETAIL ON PLATE E-503.

2. FOR STAIRWAY LIGHTING CONTROL, REFER TO PLATE E-301.

3. FOR LIGHTING FIXTURE MOUNTING HEIGHTS, REFER TO PLATES E-301 & E-501.

4. PROVIDE EXIT SIGN MOUNTED ON UNDERSIDE OF LANDING ABOVE.

5. COORDINATE TELEPHONE LOCATION WITH ELECTRICAL AND MECHANICAL EQUIPMENT.

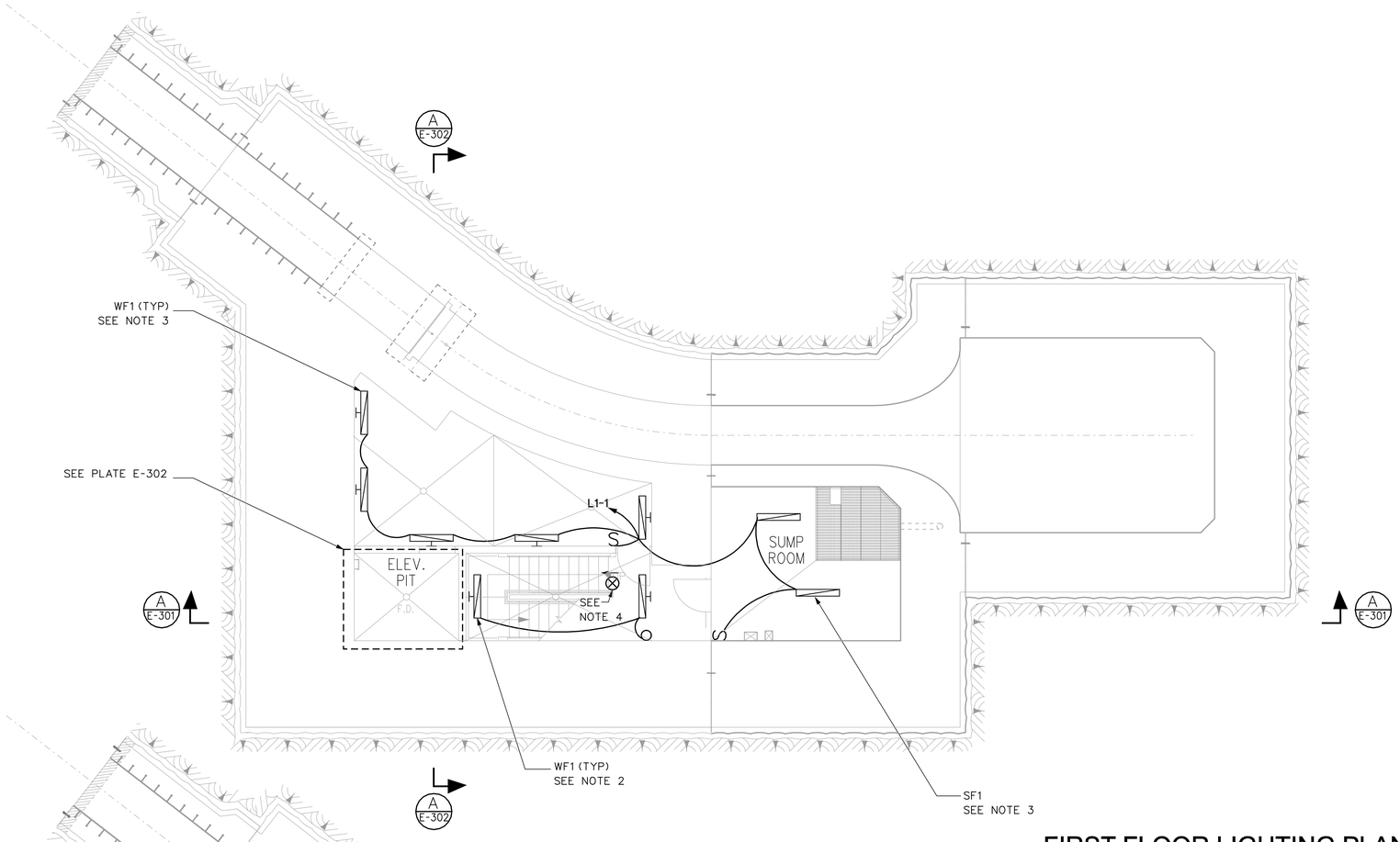

FIRST FLOOR LIGHTING PLAN - EL: 1029.00'

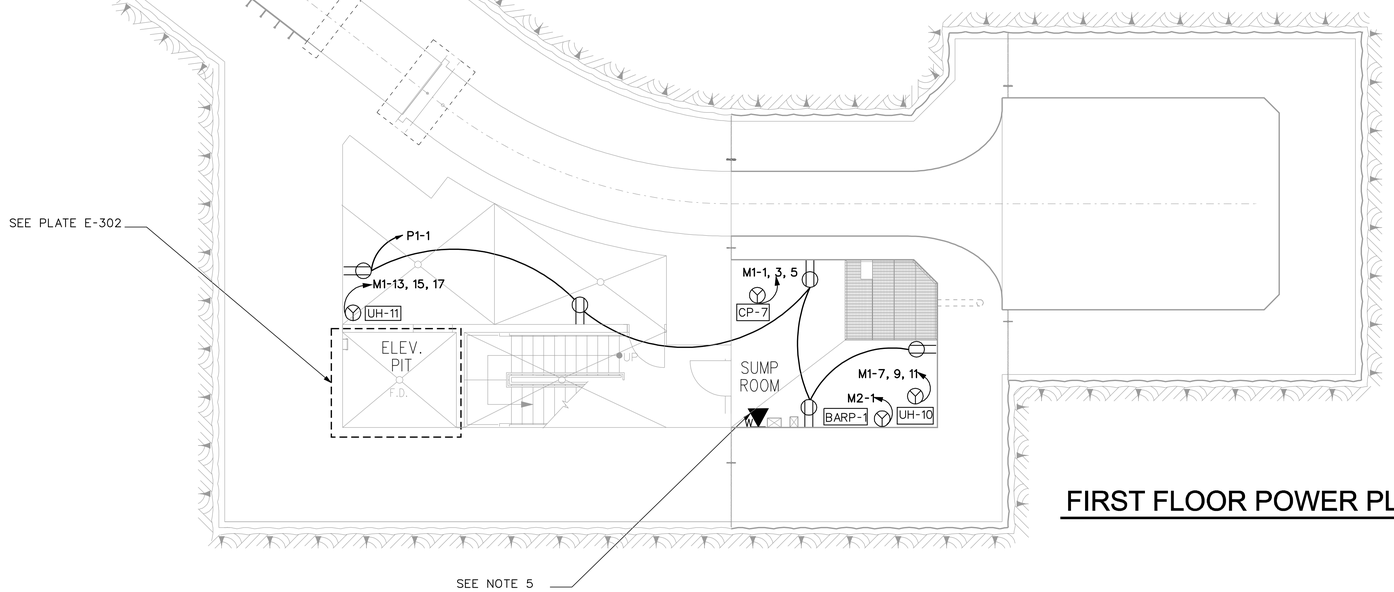

FIRST FLOOR POWER PLAN - EL: 1029.00'

3/16" = 1' - 0" 5' 0 5' 10'

US Army Corps of Engineers
Seattle District

Symbol	Description	Appr.	Date
			/ /

Designed by: LAM
Drawn by: BAZE
Checked by: MASTEN
Date: 16 MAR 06
File: E-56-14-19
Rev.

U.S.ARMY ENGINEER DISTRICT, SEATTLE
CORPS OF ENGINEERS
SEATTLE, WASHINGTON
Prepared by:

ADDITIONAL WATER STORAGE PROJECT
HOWARD HANSON DAM
GREEN RIVER WASHINGTON

1ST FLOOR PLANS
ELEVATION 1029.00'

Plate number: E-101
Sheet of

DATE AND TIME PLOTTED: 07-AUG-2008 12:23
DESIGN FILE: I:\AECDESIGNS\HHAWE_101S01.DGN

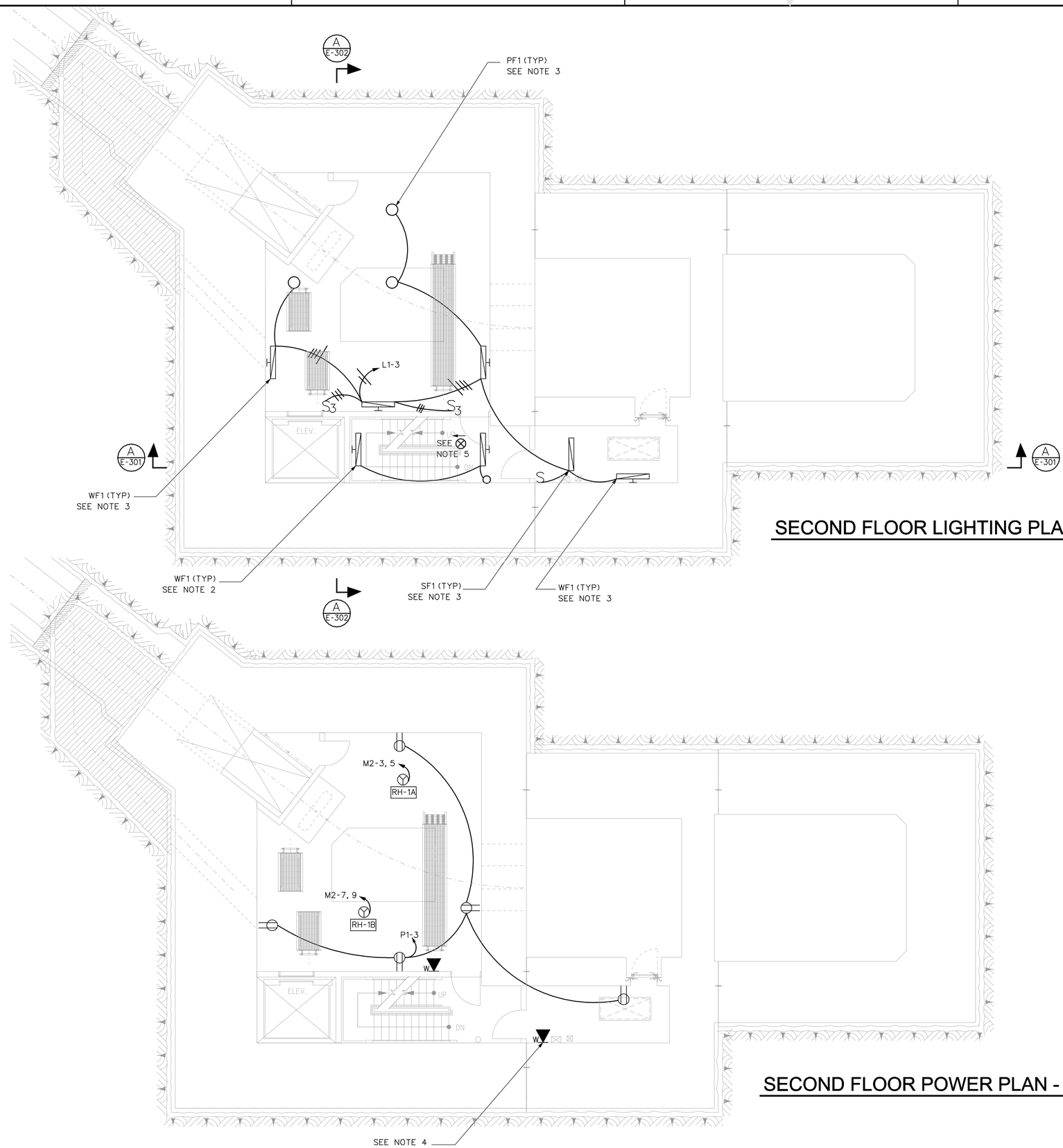

SECOND FLOOR LIGHTING PLAN - EL: 1042.00'

SECOND FLOOR POWER PLAN - EL: 1042.00'

NOTES:

1. ALL CONDUIT SHALL BE ROUTED EXPOSED. MOUNT CONDUIT ON CHANNEL STEEL, NOT DIRECTLY TO CONCRETE WALLS. REFER TO DETAIL ON PLATE E-503.
2. FOR STAIRWAY LIGHTING CONTROL, REFER TO PLATE E-301.
3. FOR LIGHTING FIXTURE MOUNTING HEIGHTS, REFER TO PLATES E-301 AND E-501.
4. COORDINATE TELEPHONE LOCATION WITH ELECTRICAL AND MECHANICAL EQUIPMENT.
5. PROVIDE EXIT SIGN MOUNTED ON UNDERSIDE OF LANDING ABOVE.

3/16" = 1' - 0" 5' 0 5' 10'

US Army Corps of Engineers
Seattle District

Symbol	Description	Appr.	Date
			/ /

U.S.ARMY ENGINEER DISTRICT, SEATTLE
CORPS OF ENGINEERS
SEATTLE, WASHINGTON

Prepared by:

Designed by: LAM
Drawn by: BAZE
Checked by: MASTEN
Date: 16 MAR 06
File: E-56-14-19
Rev.

ADDITIONAL WATER STORAGE PROJECT
HOWARD HANSON DAM
GREEN RIVER WASHINGTON

2ND FLOOR PLANS
ELEVATION 1042.00'

Plate number:
E-102
Sheet of

DATE AND TIME PLOTTED: 07-AUG-2008 12:24
DESIGN FILE: I:\AECDESIGNS\HHAW\Electrical\HHAWE-102S02.DGN

NOTES:

1. ALL CONDUIT SHALL BE ROUTED EXPOSED. MOUNT CONDUIT ON CHANNEL STEEL, NOT DIRECTLY TO CONCRETE WALLS. REFER TO DETAIL ON PLATE E-503.

2. FOR STAIRWAY LIGHTING CONTROL, REFER TO PLATE E-301.

3. FOR LIGHTING FIXTURE MOUNTING HEIGHTS, REFER TO PLATES E-301 AND E-501.

4. COORDINATE TELEPHONE LOCATION WITH ELECTRICAL AND MECHANICAL EQUIPMENT.

5. PROVIDE OUTLET FOR WELDER.

6. PROVIDE EXIT SIGN AS SHOWN ON PLAN.

7. PULLBOX FOR STRAIN RELIEF SHALL BE MOUNTED ON WALL WITH TOP OF BOX 6' AFF. SEE DETAIL ON PLATE E-503.

8. TWO WL1 FIXTURES SHALL BE PROVIDED AND SURFACE MOUNTED ON THE CEILING OF THE FISH COLLECTOR. FOR MOUNTING DETAILS, REFER TO DETAILS I, PLATE E-502.

9. ROUTE LIGHTING CONDUIT ALONG GALLERY WALL FROM FISH COLLECTOR TO PANEL L1 LOCATED IN THE ELECTRICAL ROOM AT EL. 1163.38. FOR CIRCUIT IDENTIFICATION, SEE PANEL SCHEDULE.

10. PROVIDE EXIT SIGN MOUNTED ON UNDERSIDE OF LANDING ABOVE.

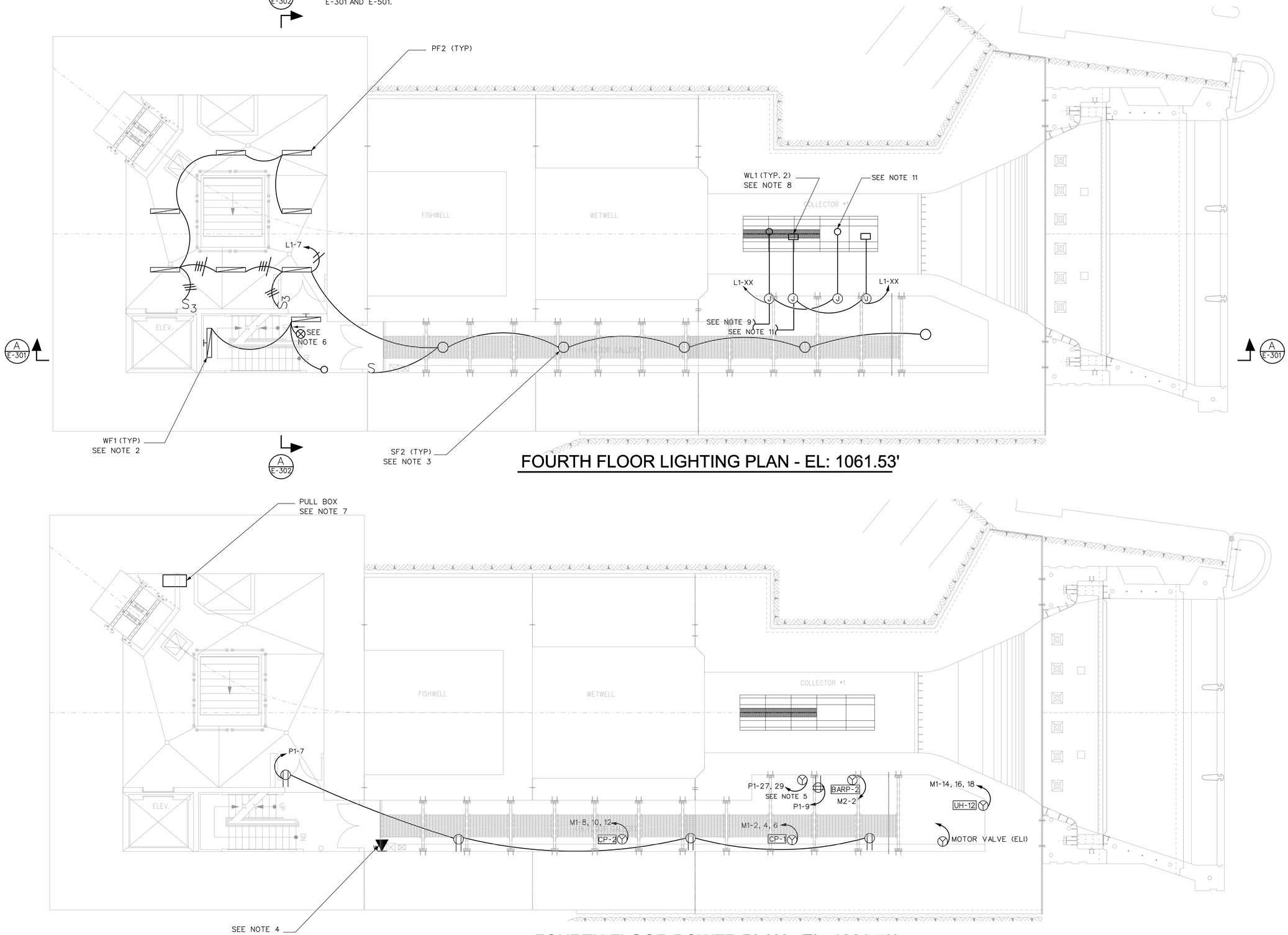

FOURTH FLOOR LIGHTING PLAN - EL: 1061.53'

FOURTH FLOOR POWER PLAN - EL: 1061.53'

3/16" = 1' - 0" 5' 0 5' 10'

US Army Corps of Engineers
Seattle District

Description	Symbol	Appr.	Symbol	Date	Description	Symbol
				/ /		

Designed by: LAM
Drawn by: BAZE
Checked by: MASTEN
Date: 16 MAR 06
File # E-56-14-19
Rev.

U.S.ARMY ENGINEER DISTRICT, SEATTLE
CORPS OF ENGINEERS
SEATTLE, WASHINGTON
Prepared by:

ADDITIONAL WATER STORAGE PROJECT
HOWARD HANSON DAM
4TH FLOOR PLANS
ELEVATION 1061.53'
GREEN RIVER WASHINGTON

Plate number: E-104
Sheet of

DATE AND TIME PLOTTED: 07-AUG-2008 12:24
DESIGN FILE: I:\AECDESIGNS\HHAW\Electrical\HHAWE-104S04.DGN

NOTES:

1. ALL CONDUIT SHALL BE ROUTED EXPOSED. MOUNT CONDUIT ON CHANNEL STEEL, NOT DIRECTLY TO CONCRETE WALLS. REFER TO DETAIL ON PLATE E-503.

2. PROVIDE OUTLET FOR WELDER.

3. COORDINATE TELEPHONE LOCATION WITH ELECTRICAL & MECHANICAL EQUIPMENT.

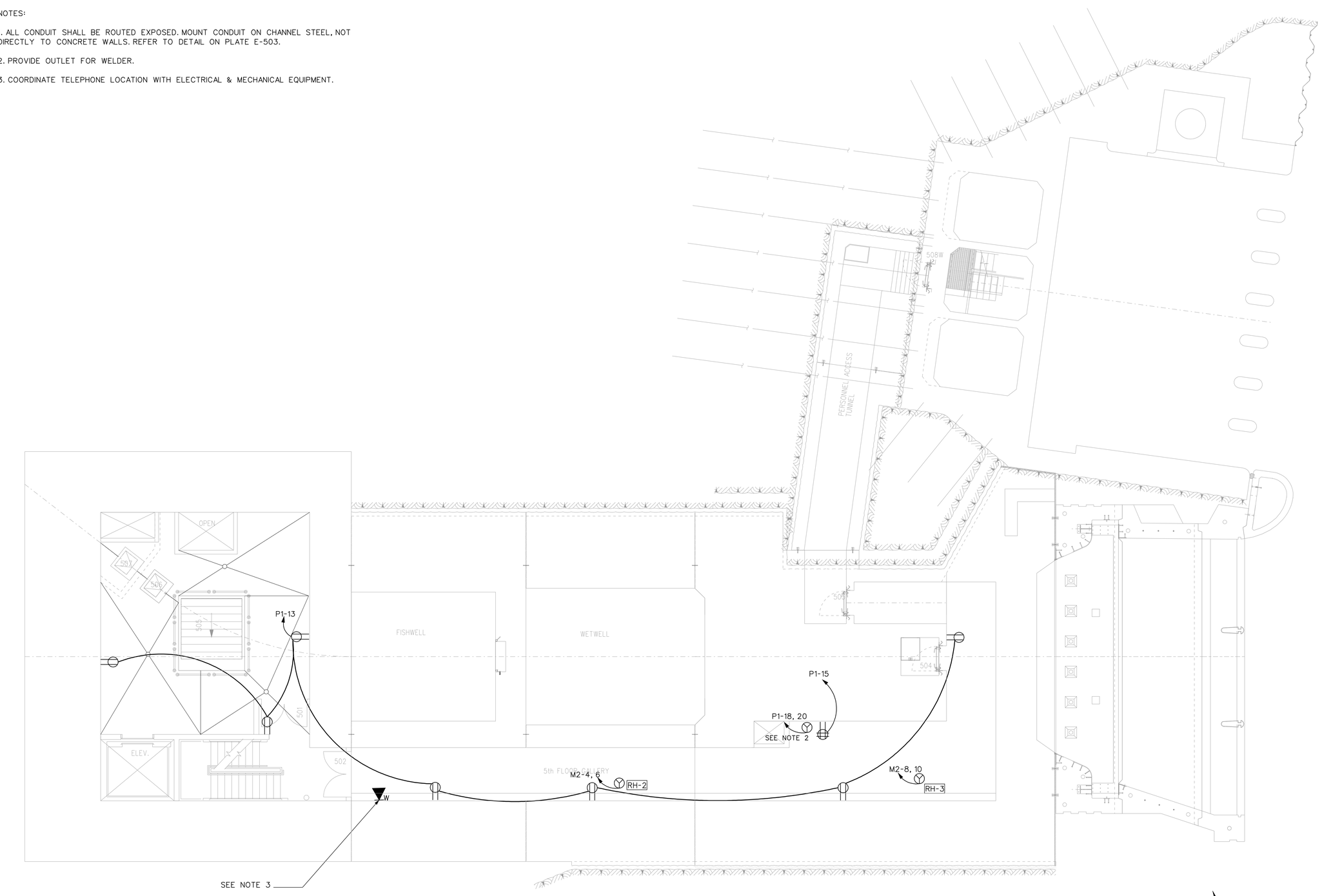

FIFTH FLOOR POWER PLAN - EL: 1074.13'

3/16" = 1' - 0" 5' 0 5' 10'

US Army Corps of Engineers
Seattle District

Symbol	Description	Date	Appr.	Symbol	Description
		/ /			

Designed by: LAM
Drawn by: BAZE
Checked by: MASTEN
Date: 16 MAR 06
File: E-56-14-19
Rev.

U.S.ARMY ENGINEER DISTRICT, SEATTLE
CORPS OF ENGINEERS
SEATTLE, WASHINGTON
Prepared by:

ADDITIONAL WATER STORAGE PROJECT
HOWARD HANSON DAM
5TH FLOOR POWER PLAN
ELEVATION 1074.13'
GREEN RIVER WASHINGTON

Plate number:
E-105
Sheet of

DATE AND TIME PLOTTED: 07-AUG-2008 12:25
DESIGN FILE: J:\AECDESIGNS\HHAW\Electrical\HHAWE_105S05.DGN

NOTES:

1. ALL CONDUIT SHALL BE ROUTED EXPOSED. MOUNT CONDUIT ON CHANNEL STEEL, NOT DIRECTLY TO CONCRETE WALLS. REFER TO DETAIL ON PLATE E-503.

2. FOR STAIRWAY LIGHTING CONTROL, REFER TO PLATE E-301.

3. FOR LIGHTING FIXTURE MOUNTING HEIGHTS, REFER TO PLATES E-301 AND E-501.

4. TWO LED FIXTURES SHALL BE PROVIDED AND SURFACE MOUNTED ON THE CEILING OF THE FISH COLLECTOR. FOR MOUNTING DETAILS, REFER TO DETAILS II, PLATE E-502.

5. ROUTE LIGHTING CONDUIT ALONG GALLERY WALL FROM THE FISH COLLECTOR TO PANEL L1 LOCATED IN ELECTRICAL ROOM, ELEVATION 1163. FOR CIRCUIT IDENTIFICATION, SEE PANEL SCHEDULE.

6. PROVIDE EXIT SIGN MOUNTED ON UNDERSIDE OF LANDING ABOVE.

7.

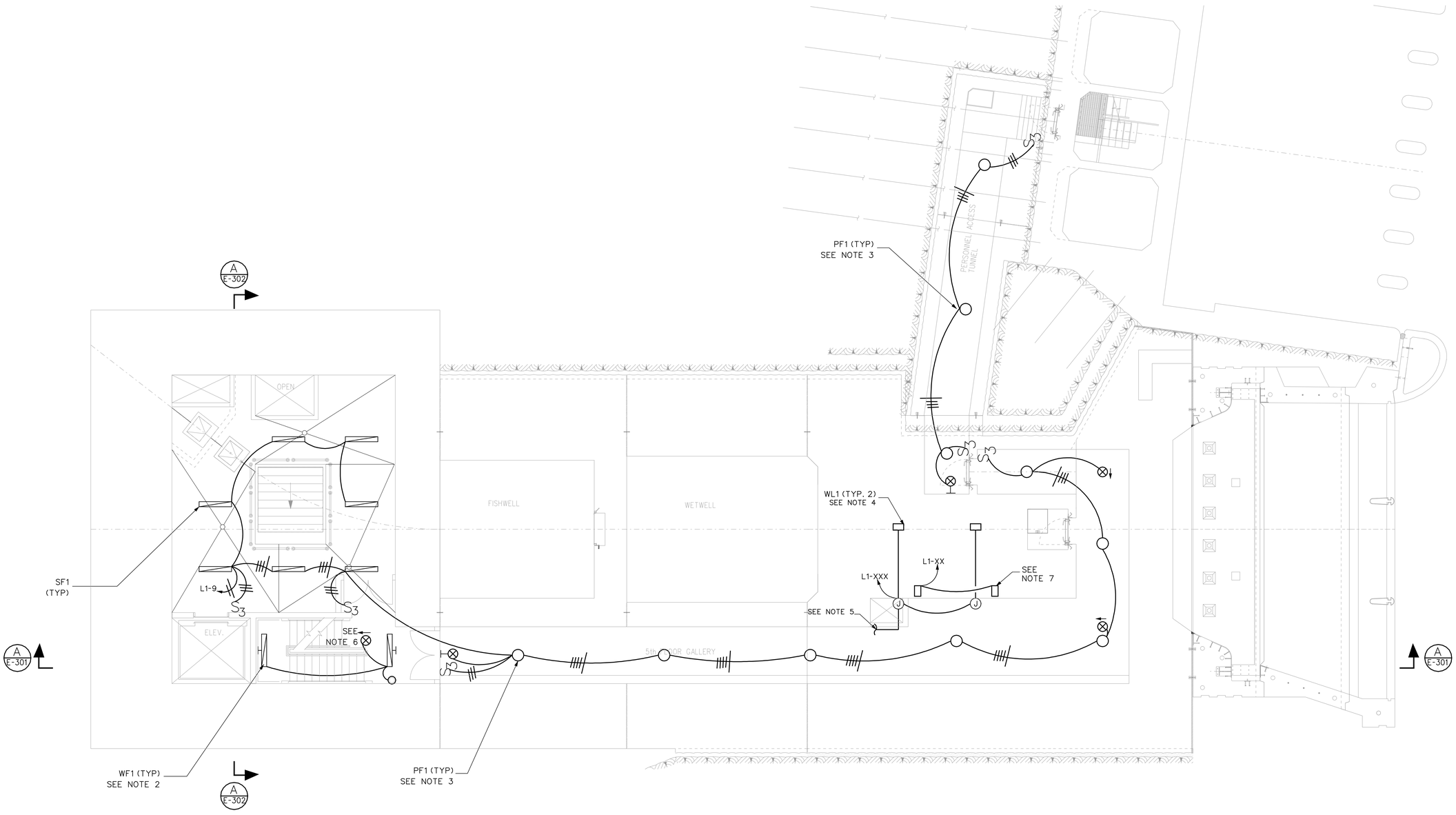

FIFTH FLOOR LIGHTING PLAN - EL: 1074.13'

3/16" - 1' - 0" 5' 0 5' 10'

US Army Corps of Engineers
Seattle District

Symbol	Description	Date	Appr.	Symbol	Description
		/ /			

Designed by: LAM
Drawn by: BAZE
Checked by: MASTEN
Date: 16 MAR 06
File • E-56-14-19
Rev.

U.S.ARMY ENGINEER DISTRICT, SEATTLE
CORPS OF ENGINEERS
SEATTLE, WASHINGTON
Prepared by:

ADDITIONAL WATER STORAGE PROJECT
HOWARD HANSON DAM
5TH FLOOR LIGHTING PLAN
ELEVATION 1074.13'
GREEN RIVER WASHINGTON

Plate number: E-106
Sheet of

DATE AND TIME PLOTTED: 07-AUG-2008 12:25
DESIGN FILE: I:\AECDESIGNS\HHAW\Electrical\HHAWE_106S06.DGN

NOTES:

1. ALL CONDUIT SHALL BE ROUTED EXPOSED. MOUNT CONDUIT ON CHANNEL STEEL, NOT DIRECTLY TO CONCRETE WALLS. REFER TO DETAIL ON PLATE E-503.

2. FOR STAIRWAY LIGHTING CONTROL, REFER TO PLATE E-301.

3. FOR LIGHTING FIXTURE MOUNTING HEIGHTS, REFER TO PLATES E-301 AND E-501.

4. COORDINATE TELEPHONE LOCATION WITH ELECTRICAL AND MECHANICAL EQUIPMENT.

5. PROVIDE OUTLET FOR WELDER.

6. PROVIDE EXIT SIGN MOUNTED ON UNDERSIDE OF LANDING ABOVE.

7. TWO LED FIXTURES SHALL BE PROVIDED AND SURFACE MOUNTED ON THE CEILING OF THE FISH COLLECTOR. FOR MOUNTING DETAILS, REFER TO DETAILS II, PLATE E-502.

8. ROUTE LIGHTING CONDUIT ALONG THE GALLERY WALL FROM THE FISH COLLECTOR TO PANEL L1 LOCATED IN ELECTRICAL ROOM, ELEVATION 1163. FOR CIRCUIT IDENTIFICATION, SEE PANEL SCHEDULE.

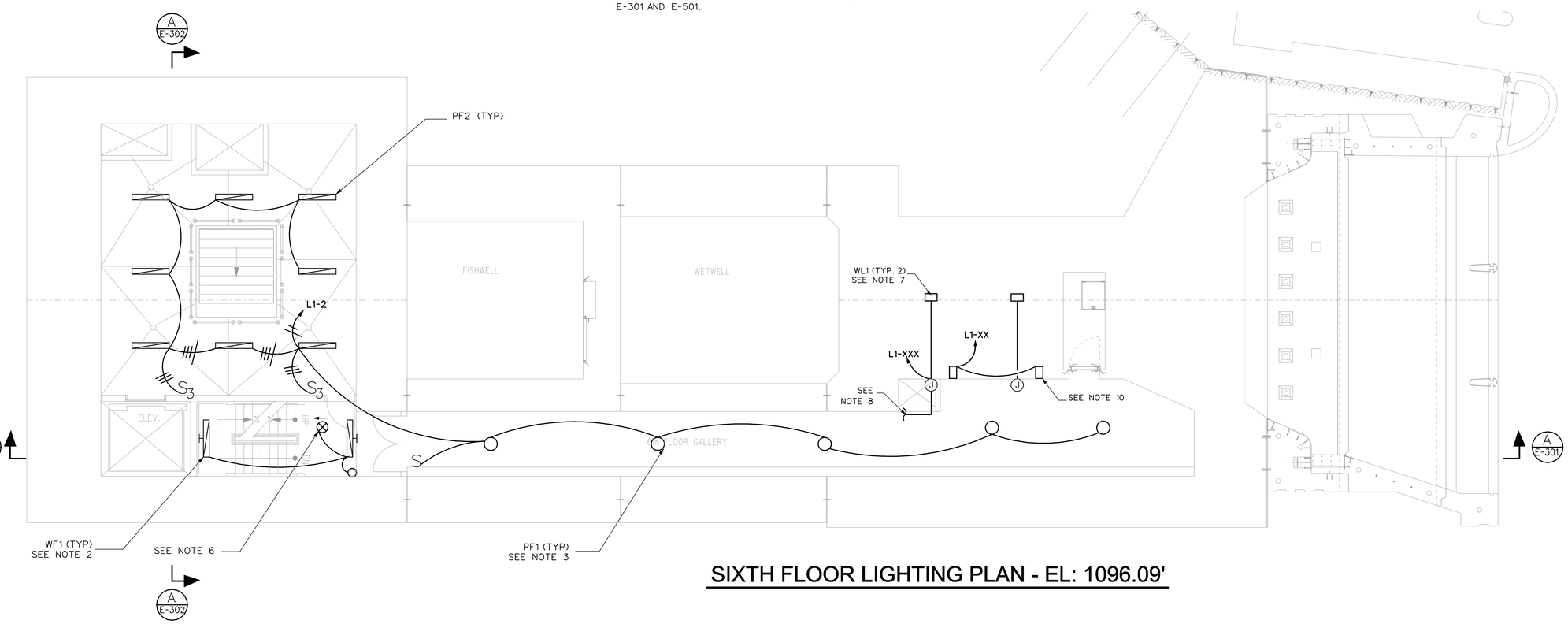

SIXTH FLOOR LIGHTING PLAN - EL: 1096.09'

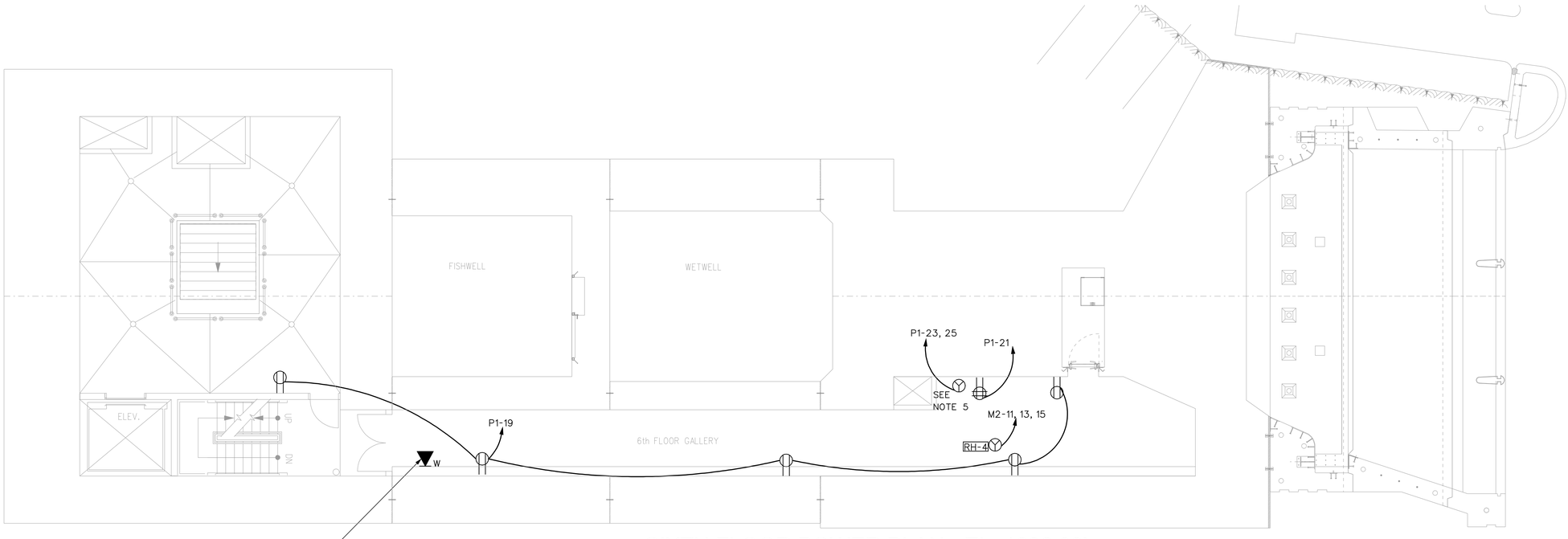

SIXTH FLOOR POWER PLAN - EL: 1096.09'

3/16" - 1' - 0" 5' 0 5' 10'

US Army Corps of Engineers
Seattle District

Symbol	Description	Date	Appr.	Symbol
		/ /		

Designed by: LAM
Drawn by: BAZE
Checked by: MASTEN
Date: 16 MAR 06
File: E-56-14-19
Rev.

U.S.ARMY ENGINEER DISTRICT,SEATTLE
CORPS OF ENGINEERS
SEATTLE, WASHINGTON
Prepared by:

ADDITIONAL WATER STORAGE PROJECT
HOWARD HANSON DAM
GREEN RIVER WASHINGTON

6TH FLOOR PLANS
ELEVATION 1096.09'

Plate number:
E-107
Sheet of

DATE AND TIME PLOTTED: 07-AUG-2008 12:25
DESIGN FILE: J:\ACCDESIGNS\HHAW\Electrical\HHAWE-107SO7.DGN

NOTES:

1. ALL CONDUIT SHALL BE ROUTED EXPOSED. MOUNT CONDUIT ON CHANNEL STEEL, NOT DIRECTLY TO CONCRETE WALLS. REFER TO DETAIL ON PLATE E-503.

2. FOR STAIRWAY LIGHTING CONTROL, REFER TO PLATE E-301.

3. FOR LIGHTING FIXTURE MOUNTING HEIGHTS, REFER TO PLATES E-301 AND E-501.

4. COORDINATE TELEPHONE LOCATION WITH ELECTRICAL AND MECHANICAL EQUIPMENT.

5. PROVIDE OUTLET FOR WELDER.

6. PROVIDE EXIT SIGN MOUNTED ON UNDERSIDE OF LANDING ABOVE.

7. TWO LED FIXTURES SHALL BE PROVIDED AND SURFACE MOUNTED ON THE CEILING OF THE FISH COLLECTOR. FOR MOUNTING DETAILS, REFER TO DETAILS II, PLATE E-502.

8. ROUTE LIGHTING CONDUIT ALONG GALLERY WALL FROM THE FISH COLLECTOR TO PANEL L1 LOCATED IN ELECTRICAL ROOM, AT ELEVATION 1163. FOR CIRCUIT IDENTIFICATION, SEE PANEL SCHEDULE.

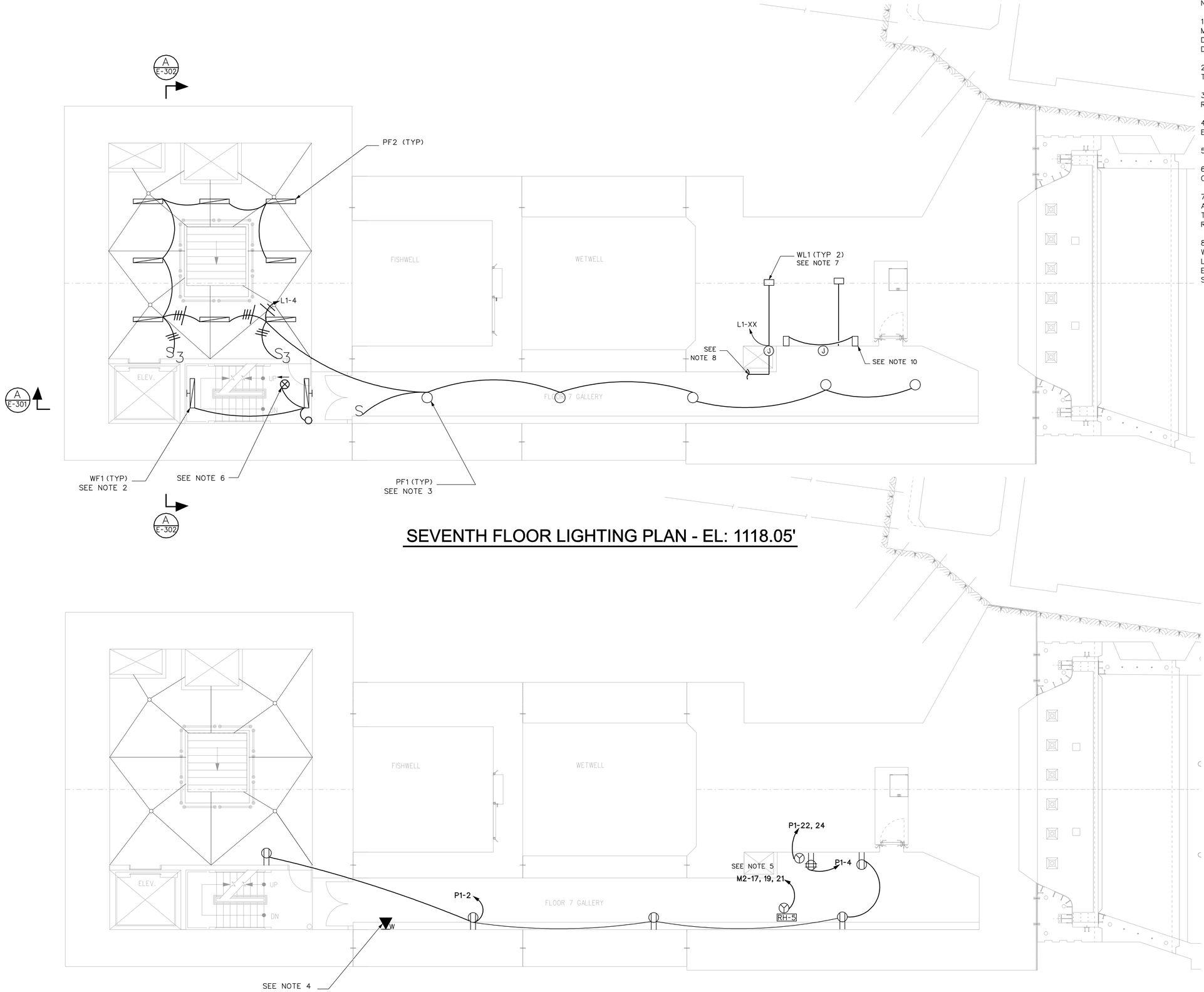

SEVENTH FLOOR LIGHTING PLAN - EL: 1118.05'

SEVENTH FLOOR POWER PLAN - EL: 1118.05'

3/16" = 1' - 0" 5' 0 5' 10'

US Army Corps of Engineers
Seattle District

Symbol	Description	Appr.	Date
			/ /

Designed by: LAM
Drawn by: BAZE
Checked by: MASTEN
Prepared by:

U.S.ARMY ENGINEER DISTRICT,SEATTLE
CORPS OF ENGINEERS
SEATTLE, WASHINGTON

Date: 16 MAR 06
File: E-56-14-19
Rev.

ADDITIONAL WATER STORAGE PROJECT
HOWARD HANSON DAM
GREEN RIVER

7TH FLOOR PLANS
ELEVATION 1118.05'

WASHINGTON

Plate number:
E-108
Sheet of

FILE: I:\AE\DESIGNS\HHAW\Electrical\HHAWE-108SD8.DGN
DESIGN FILE:
DATE AND TIME PLOTTED: 07-AUG-2008 12:26

NOTES:

1. ALL CONDUIT SHALL BE ROUTED EXPOSED. MOUNT CONDUIT ON CHANNEL STEEL, NOT DIRECTLY TO CONCRETE WALLS. REFER TO DETAIL ON PLATE E-503.

2. FOR STAIRWAY LIGHTING CONTROL, REFER TO PLATE E-301.

3. FOR LIGHTING FIXTURE MOUNTING HEIGHTS, REFER PLATES E-301 AND E-501.

4. COORDINATE TELEPHONE LOCATION WITH ELECTRICAL AND MECHANCAL EQUIPMENT.

5. PROVIDE OUTLET FOR WELDER.

6. PROVIDE EXIT SIGN MOUNTED ON UNDERSIDE OF LANDING ABOVE.

7. TWO LED FIXTURES SHALL BE PROVIDED AND SURFACE MOUNTED ON THE CEILING OF THE FISH COLLECTOR. FOR MOUNTING DETAILS, REFER TO DETAILS II, PLATE E-502.

8. ROUTE LIGHTING CONDUIT ALONG GALLERY WALL FROM THE FISH COLLECTOR TO PANEL L1 LOCATED IN THE ELECTRICAL ROOM, ELEVATION 1163. FOR CIRCUIT IDENTIFICATION, SEE PANEL SCHEDULE.

9. PROVIDE TWO CAMERAS IN EACH FISH COLLECTOR AS SHOWN ON PLAN. FOR MOUNTING DETAILS, REFER TO DETAILS II, PLATE E-502. ROUTE CAMERA CONDUIT FROM THE FISH COLLECTOR TO PANEL L1 LOCATED IN ELECTRICAL ROOM AT ELEVATION 1163.

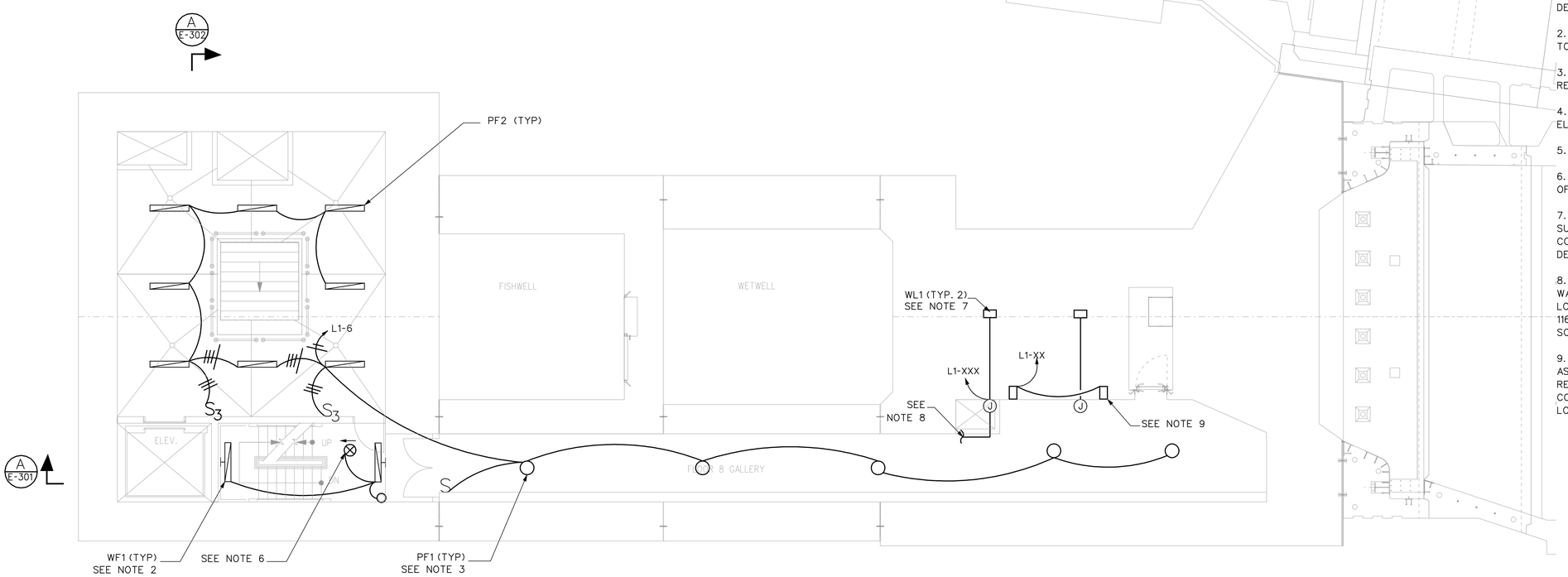

EIGHTH FLOOR LIGHTING PLAN - EL: 1140.01'

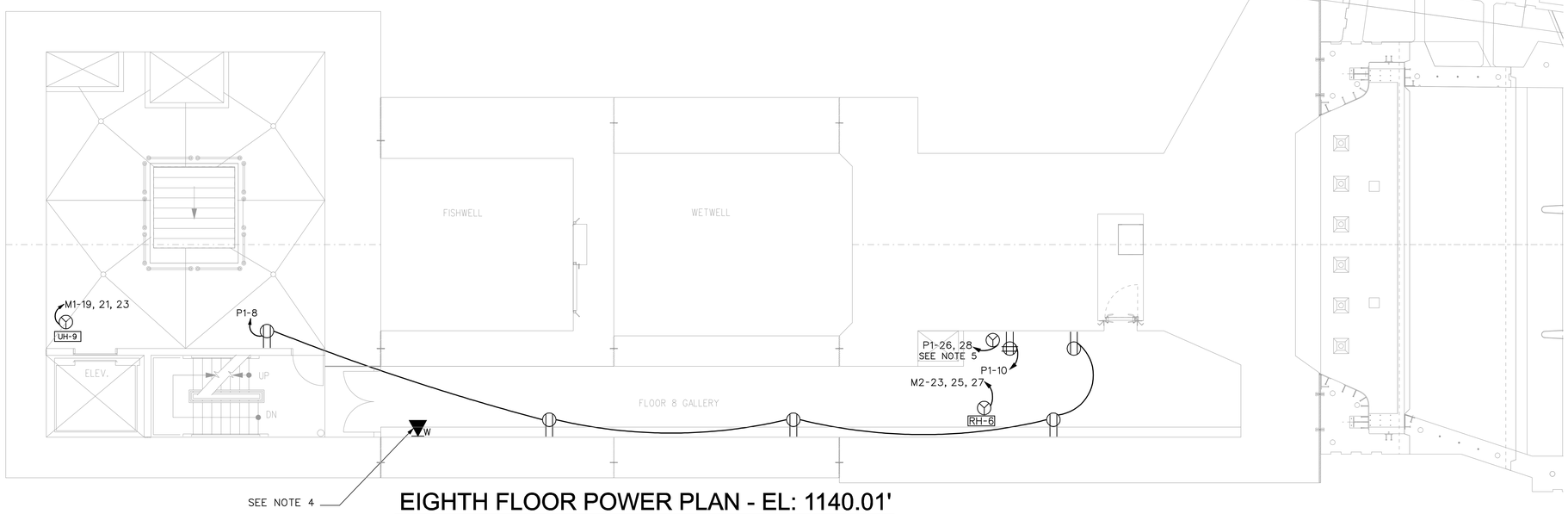

EIGHTH FLOOR POWER PLAN - EL: 1140.01'

3/16" - 1' - 0" 5' 0 5' 10'

US Army Corps of Engineers
Seattle District

Symbol	Description	Date	Appr.	Symbol
		/ /		

U.S.ARMY ENGINEER DISTRICT,SEATTLE
CORPS OF ENGINEERS
SEATTLE, WASHINGTON

Designed by: LAM
Drawn by: BAZE
Prepared by:
Recommended by: MASTEN
Date: 16 MAR 06
File # E-56-14-19
Rev.

ADDITIONAL WATER STORAGE PROJECT
HOWARD HANSON DAM
GREEN RIVER

8TH FLOOR PLANS
ELEVATION 1140.01'

WASHINGTON

Plate number:
E-109
Sheet of

DATE AND TIME PLOTTED: 07-AUG-2008 12:26
DESIGN FILE: I:\AECDESIGNS\HHAW\Electrical\HHAWE-109SD9.DGN

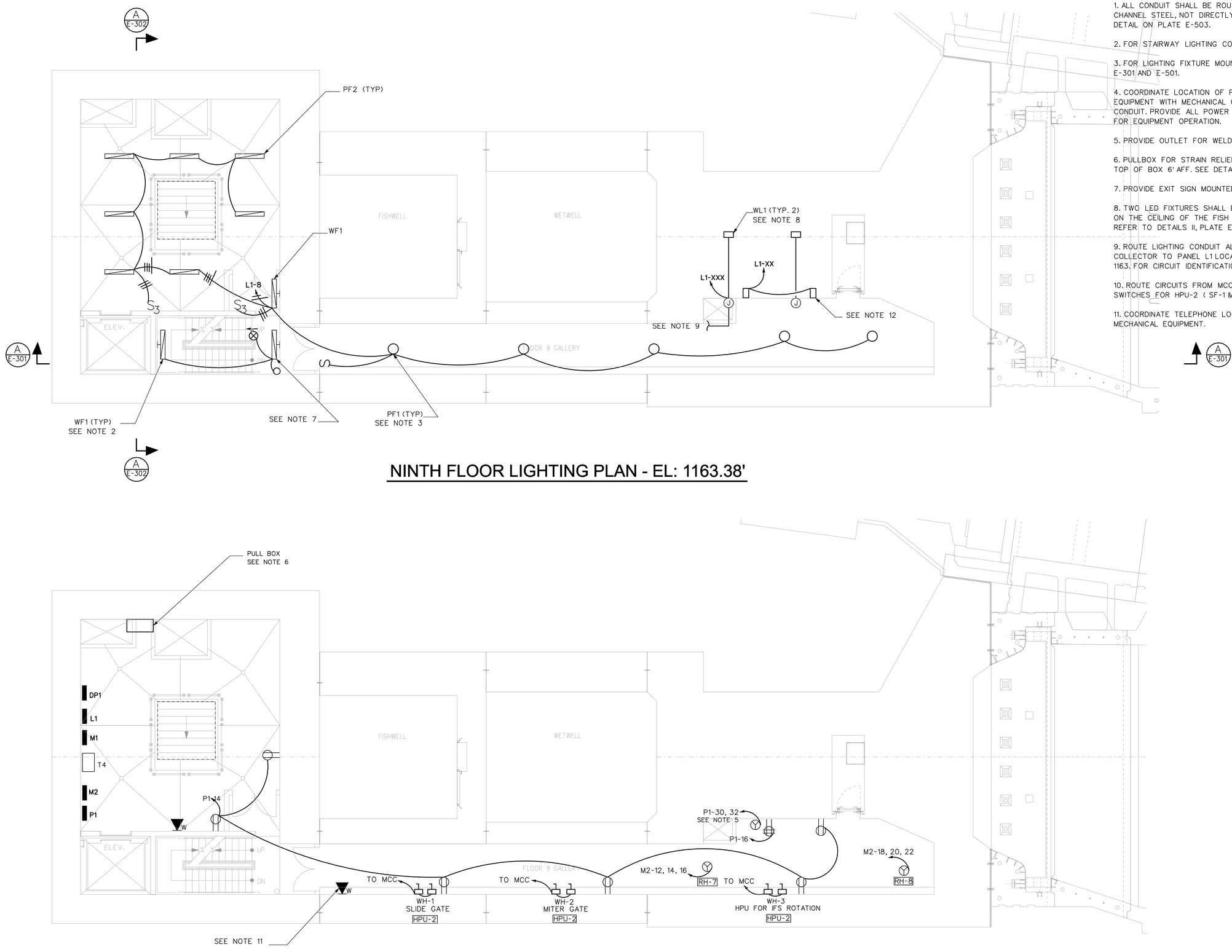

NINTH FLOOR LIGHTING PLAN - EL: 1163.38'

NINTH FLOOR POWER PLAN - EL: 1163.38'

NOTES:

1. ALL CONDUIT SHALL BE ROUTED EXPOSED. MOUNT CONDUIT ON CHANNEL STEEL, NOT DIRECTLY TO CONCRETE WALLS. REFER TO DETAIL ON PLATE E-503.

2. FOR STAIRWAY LIGHTING CONTROL, REFER TO PLATE E-301.

3. FOR LIGHTING FIXTURE MOUNTING HEIGHTS, REFER TO PLATES E-301 AND E-501.

4. COORDINATE LOCATION OF POWER CIRCUITS FOR MECHANICAL EQUIPMENT WITH MECHANICAL CONTRACTOR PRIOR TO ROUTING CONDUIT. PROVIDE ALL POWER AND CONTROL CIRCUITS REQUIRED FOR EQUIPMENT OPERATION.

5. PROVIDE OUTLET FOR WELDER.

6. PULLBOX FOR STRAIN RELIEF SHALL BE MOUNTED ON WALL WITH TOP OF BOX 6' AFF. SEE DETAIL ON PLATE E-502.

7. PROVIDE EXIT SIGN MOUNTED ON UNDERSIDE OF LANDING ABOVE.

8. TWO LED FIXTURES SHALL BE PROVIDED AND SURFACE MOUNTED ON THE CEILING OF THE FISH COLLECTOR. FOR MOUNTING DETAILS, REFER TO DETAILS II, PLATE E-502.

9. ROUTE LIGHTING CONDUIT ALONG GALLERY WALL FROM THE FISH COLLECTOR TO PANEL L1 LOCATED IN ELECTRICAL ROOM ELEVATION 1163. FOR CIRCUIT IDENTIFICATION, SEE PANEL SCHEDULE.

10. ROUTE CIRCUITS FROM MCC TO WALL MOUNTED DISCONNECT SWITCHES FOR HPU-2 (SF-1 & RF-1) MOTORS.

11. COORDINATE TELEPHONE LOCATION WITH ELECTRICAL AND MECHANICAL EQUIPMENT.

A E-301

3/16" = 1'-0" 5' 0 5' 10'

US Army Corps of Engineers
Seattle District

Symbol	Description	Appr.	Date
			/ /

U.S.ARMY ENGINEER DISTRICT,SEATTLE
CORPS OF ENGINEERS
SEATTLE, WASHINGTON

Prepared by:

Designed by: LAM
Drawn by: BAZE
Checked by: MASTEN
Date: 16 MAR 06
File: E-56-14-19
Rev.

ADDITIONAL WATER STORAGE PROJECT
HOWARD HANSON DAM
GREEN RIVER

9TH FLOOR PLANS
ELEVATION 1163.38'

WASHINGTON

Plate number:
E-110
Sheet of

DATE AND TIME PLOTTED: 07-AUG-2008 12:27
DESIGN FILE: J:\AECDESIGNS\HHAWE-110S10.DGN

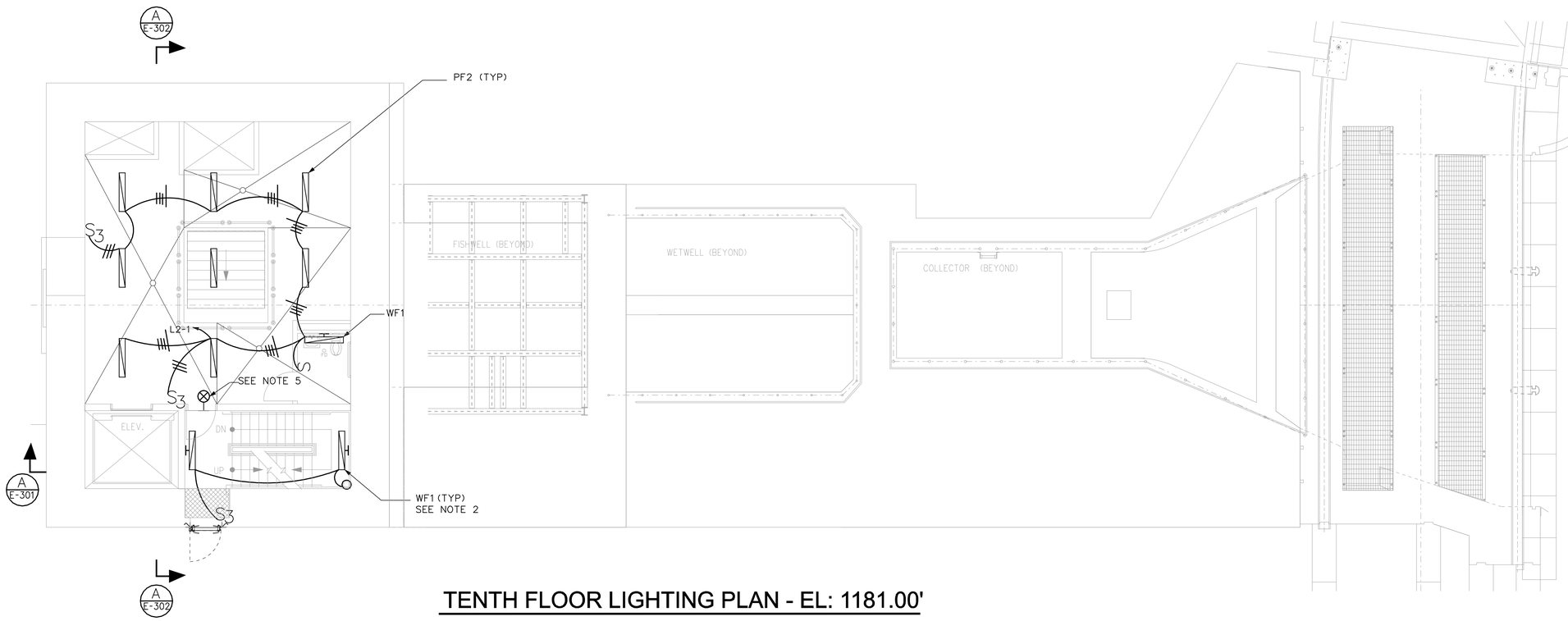

TENTH FLOOR LIGHTING PLAN - EL: 1181.00'

NOTES:

1. ALL CONDUIT SHALL BE ROUTED EXPOSED. MOUNT CONDUIT ON CHANNEL STEEL, NOT DIRECTLY TO CONCRETE WALLS. REFER TO DETAIL ON PLATE E-503.

2. FOR STAIRWAY LIGHTING CONTROL, REFER TO PLATE E-301.

3. FOR LIGHTING FIXTURE MOUNTING HEIGHTS, REFER TO PLATES E-301 AND E-501.

4. COORDINATE LOCATION OF POWER CIRCUITS FOR MECHANICAL EQUIPMENT WITH MECHANICAL CONTRACTOR PRIOR TO ROUTING CONDUIT. PROVIDE ALL POWER AND CONTROL CIRCUITS REQUIRED FOR EQUIPMENT OPERATION.

5. PROVIDE EXIT SIGN AS SHOWN ON PLAN.

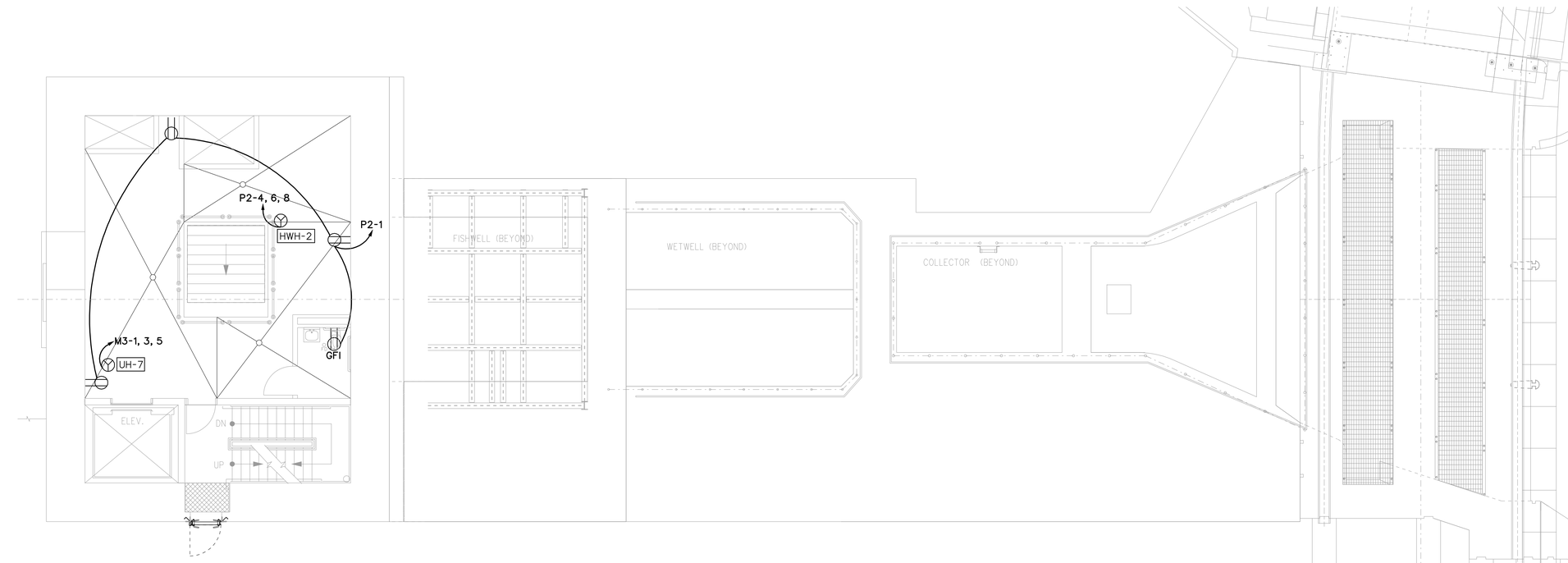

TENTH FLOOR POWER PLAN - EL: 1181.00'

3/16" = 1' - 0" 5' 0 5' 10'

US Army Corps of Engineers
Seattle District

Symbol	Description	Date	Appr.	Symbol	Description
		/ /			

Designed by: LAM
Drawn by: BAZE
Checked by: MASTEN
Date: 16 MAR 06
File: E-56-14-19
Rev.

U.S.ARMY ENGINEER DISTRICT,SEATTLE
CORPS OF ENGINEERS
SEATTLE, WASHINGTON
Prepared by:

ADDITIONAL WATER STORAGE PROJECT
HOWARD HANSON DAM
10TH FLOOR PLANS
ELEVATION 1181.00'
GREEN RIVER WASHINGTON

Plate number:
E-111
Sheet of

DATE AND TIME PLOTTED: 07-AUG-2008 12:27
DESIGN FILE: J:\AECDESIGNS\HHAW\Electrical\HHAWE-111S11.DGN

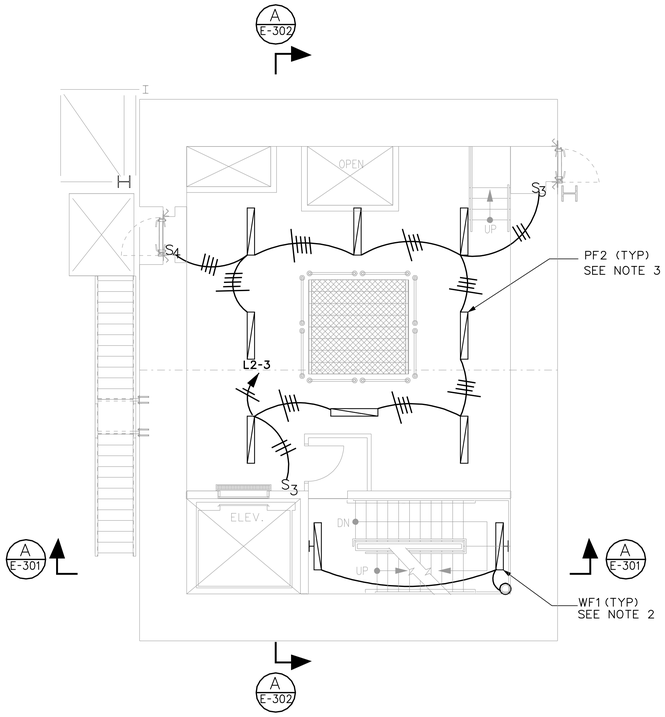

ELEVENTH FLOOR LIGHTING PLAN - EL: 1194.00'

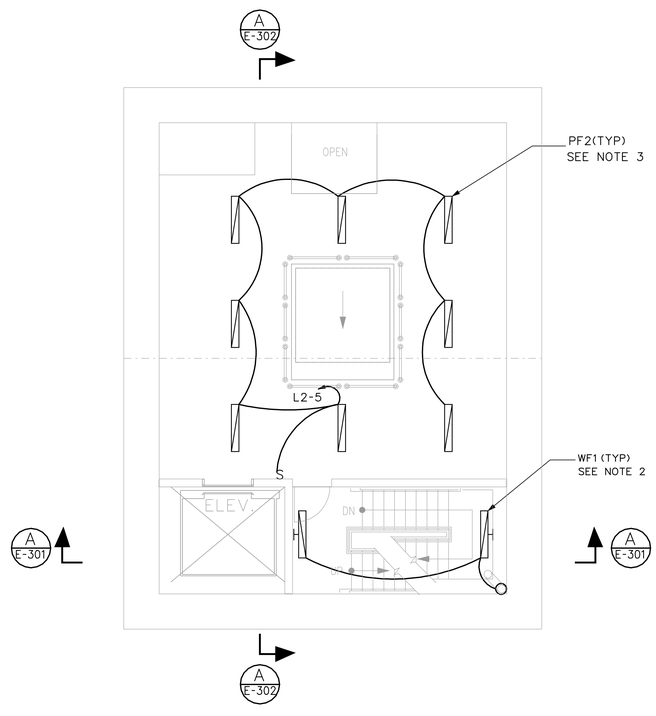

TWELFTH FLOOR LIGHTING PLAN - EL: 1204.00'

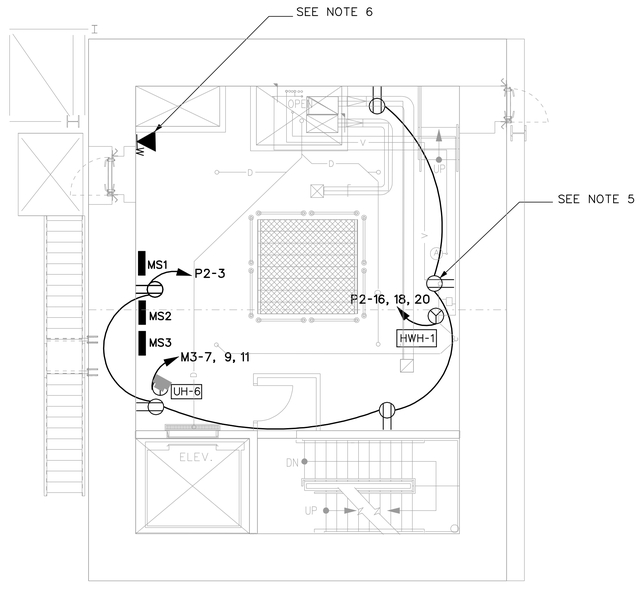

ELEVENTH FLOOR POWER PLAN - EL: 1194.00'

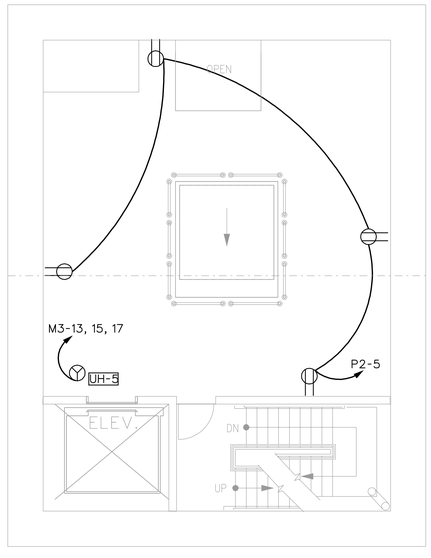

TWELFTH FLOOR POWER PLAN - EL: 1204.00'

NOTES:

1. ALL CONDUIT SHALL BE ROUTED EXPOSED. MOUNT CONDUIT ON CHANNEL STEEL, NOT DIRECTLY TO CONCRETE WALLS. REFER TO DETAIL ON PLATE E-503.

2. FOR STAIRWAY LIGHTING CONTROL, REFER TO PLATE E-301.

3. FOR LIGHTING FIXTURE MOUNTING HEIGHTS, REFER TO PLATES E-301 AND E-501.

4. COORDINATE LOCATION OF POWER CIRCUITS FOR MECHANICAL EQUIPMENT WITH MECHANICAL CONTRACTOR PRIOR TO ROUTING CONDUIT. PROVIDE ALL POWER AND CONTROL CIRCUITS REQUIRED FOR EQUIPMENT OPERATION.

5. COORDINATE LOCATIONS OF RECEPTACLES WITH EQUIPMENT MONITORING STATION.

6. PROVIDE WALL MOUNT TELEPHONE IN THE MONITORING STATION ROOM AS SHOWN. COORDINATE TELEPHONE LOCATION WITH ELECTRICAL AND MECHANICAL EQUIPMENT.

7. PROVIDE TWO 42 CIRCUIT PANELS RATING AT 480/277 VAC, 3 PHASE AND ONE 12 CIRCUIT PANEL RATING AT 208/120 VAC, 3 PHASE ON ELEVATION 1194 FOR FISH PRO EQUIIPMENT.

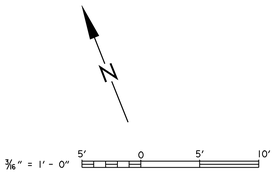

US Army Corps of Engineers
Seattle District

Symbol	Description	Appr.	Date
			/ /

U.S.ARMY ENGINEER DISTRICT,SEATTLE
CORPS OF ENGINEERS
SEATTLE, WASHINGTON

Prepared by:

Designed by: LAM
Drawn by: BAZE
Prepared by: WASTEN
Date: 16 MAR 06
File: *
Rev. E-56-14-19

ADDITIONAL WATER STORAGE PROJECT
HOWARD HANSON DAM
GREEN RIVER
WASHINGTON

11TH AND 12TH FLOOR PLANS FOR ELEVATIONS 1194.00' AND 1204.00'

Plate number:
E-112
Sheet of

DATE AND TIME PLOTTED: 07-AUG-2008 12:27
DESIGN FILE: J:\AECDESIGNS\HHAWE\Electrical\HHAWE_112512.DGN

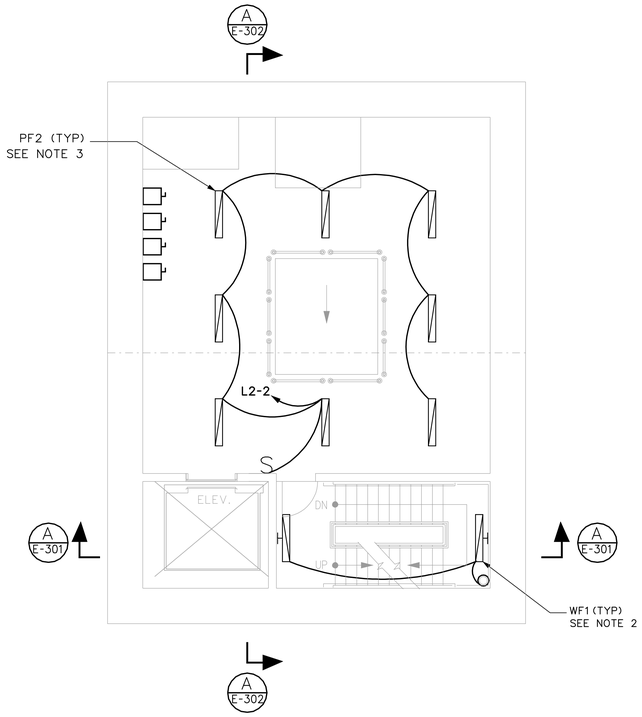

(MECHANICAL ROOM)
THIRTEENTH FLOOR LIGHTING PLAN - EL: 1216.00'

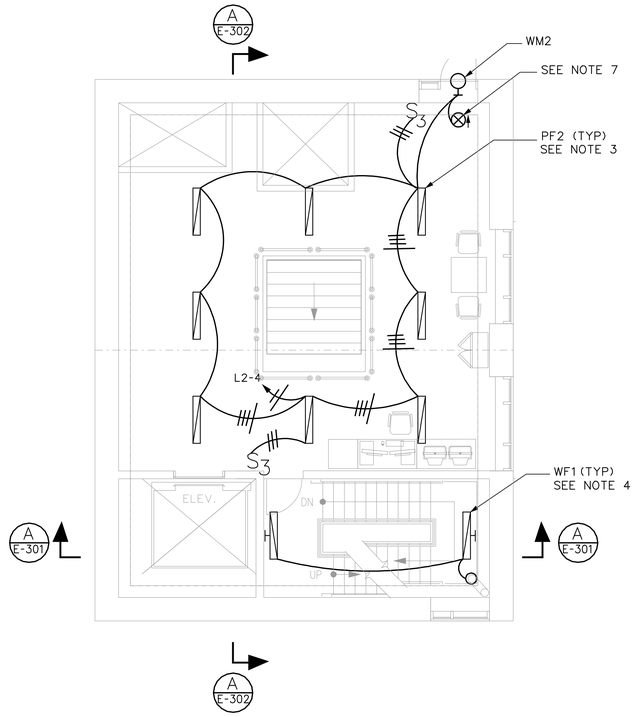

(ELECTRICAL ROOM)
FOURTEENTH FLOOR LIGHTING PLAN - EL: 1204.00'

NOTES:

1. ALL CONDUIT SHALL BE ROUTED EXPOSED. MOUNT CONDUIT ON CHANNEL STEEL, NOT DIRECTLY TO CONCRETE WALLS. REFER TO DETAIL ON PLATE E-503.

2. FOR STAIRWAY LIGHTING CONTROL, REFER TO PLATE E-301.

3. FOR LIGHTING FIXTURE MOUNTING HEIGHTS, REFER TO PLATES E-301 AND E-501.

4. COORDINATE LOCATION OF POWER CIRCUITS FOR MECHANICAL EQUIPMENT WITH MECHANICAL CONTRACTOR PRIOR TO ROUTING CONDUIT. PROVIDE ALL POWER AND CONTROL CIRCUITS REQUIRED FOR EQUIPMENT OPERATION.

5. ROUTE CIRCUITS FROM MCC TO WALL MOUNTED DISCONNECT SWITCHES FOR HPU-1 MOTORS. SEE DETAIL PLATE E-502.

6. PROVIDE WALL MOUNT TELEPHONE IN ELECTRICAL AND MECHCANICAL ROOM AS SHOWN. COORDINATE TELEPHONE LOCATION WITH MECHANICAL AND ELECTRICAL EQUIPMENT.

7. PROVIDE EXIT SIGN AS SHOWN ON PLAN.

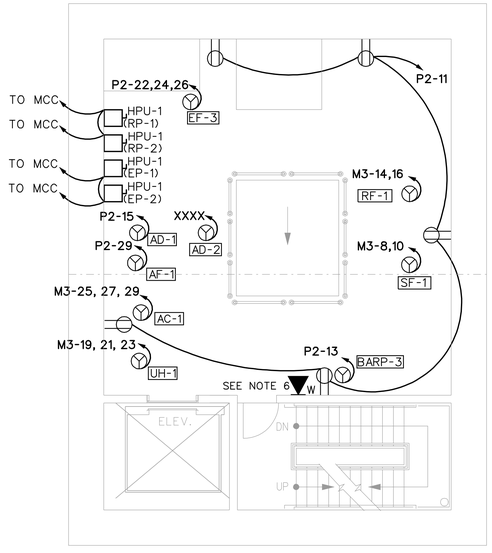

(MECHANICAL ROOM)
THIRTEENTH FLOOR POWER PLAN - EL: 1216.00'

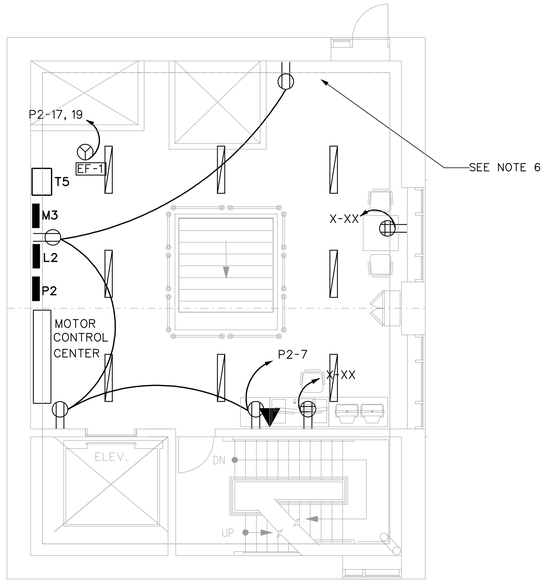

(ELECTRICAL ROOM)
FOURTEENTH FLOOR POWER PLAN - EL: 1228.00'

3/8" = 1'-0" 5' 0 5' 10'

US Army Corps of Engineers
Seattle District

Symbol	Description	Appr.	Date
			/ /

U.S.ARMY ENGINEER DISTRICT, SEATTLE
CORPS OF ENGINEERS
SEATTLE, WASHINGTON
Prepared by:

Designed by: LAM
Drawn by: BAZE
Checked by: MASTEN
Date: 16 MAR 06
File: *
Rev. E-56-14-19

ADDITIONAL WATER STORAGE PROJECT
HOWARD HANSON DAM
13TH AND 14TH FLOOR
PLANS FOR ELEVATIONS
1216.00' AND 1228.00'
GREEN RIVER WASHINGTON

Plate number:
E-113
Sheet of

DATE AND TIME PLOTTED: 07-AUG-2008 12:28
DESIGN FILE: J:\ACCDESIGNS\HHAW\Electrical\HHAWE-113513.DGN

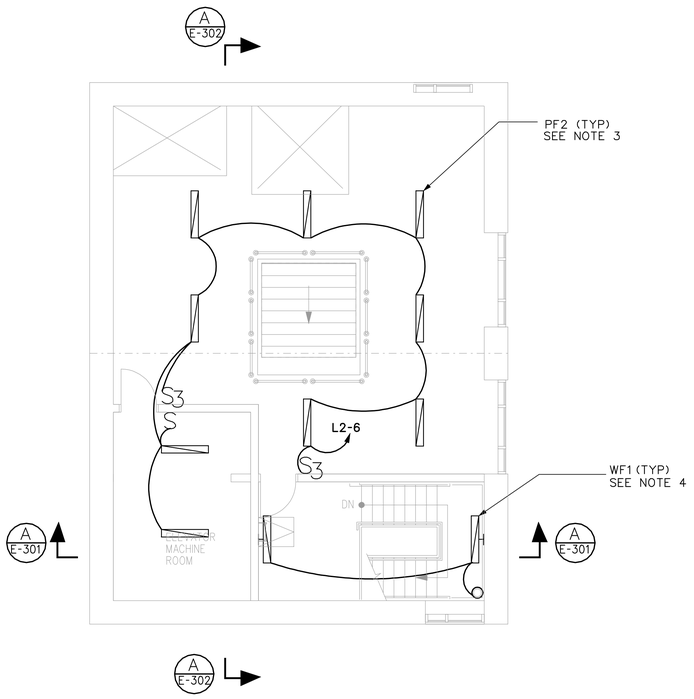

FIFTEENTH FLOOR LIGHTING PLAN - EL: 1245.00'

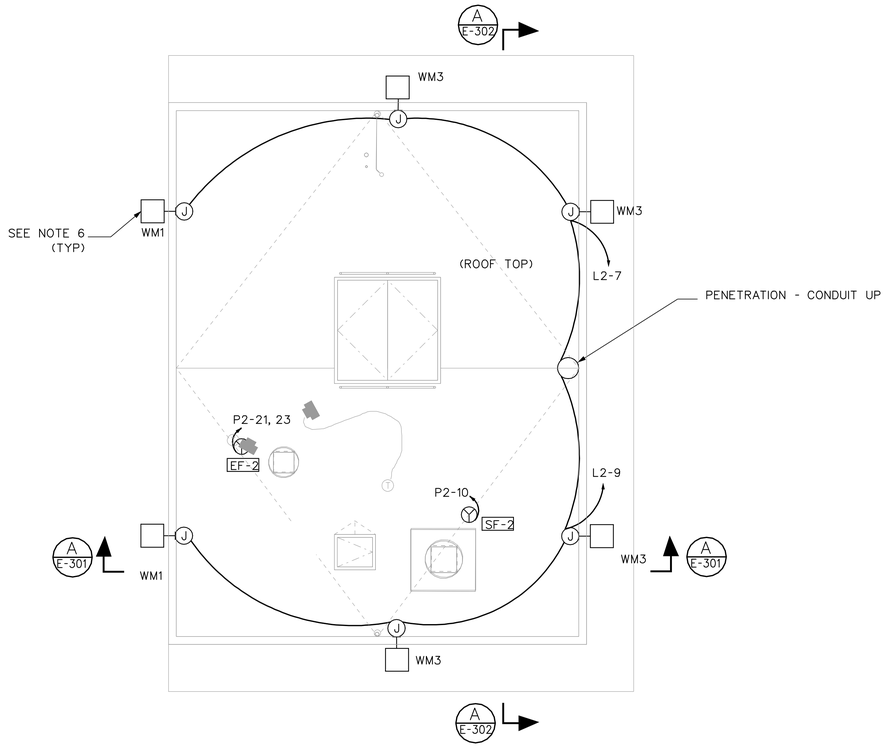

ROOF LIGHTING/POWER PLAN - EL:1257.00'

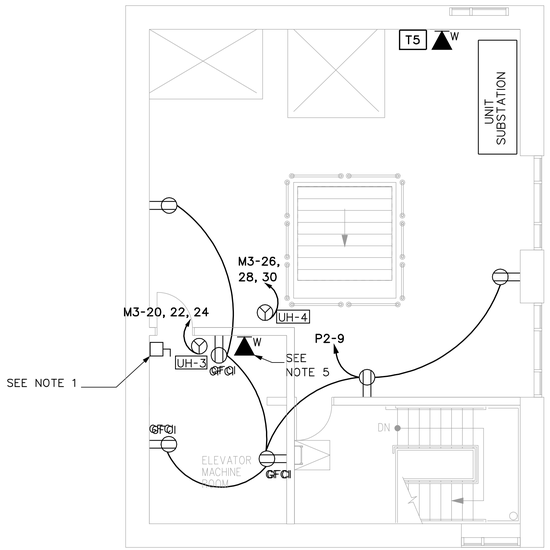

FIFTEENTH FLOOR POWER PLAN - EL: 1245.00'

NOTES:

1. PROVIDE DISCONNECT SWITCH FOR ELEVATOR. REFER TO MECHANICAL PLATE M-405.

2. COORDINATE LOCATION OF POWER CIRCUITS FOR MECHANICAL EQUIPMENT WITH MECHANICAL CONTRACTOR PRIOR TO ROUTING CONDUIT. PROVIDE ALL POWER AND CONTROL CIRCUITS REQUIRED FOR EQUIPMENT OPERATION.

3. FOR LIGHTING FIXTURE MOUNTING HEIGHTS, REFER TO PLATES E-301 AND E-501.

4. FOR STAIRWAY LIGHTING CONTROL, REFER TO PLATE E-301.

5. PROVIDE WALL MOUNT TELEPHONE IN ELEVATOR MACHINE ROOM AS SHOWN ON PLAN. COORDINATE WITH ELECTRICAL AND MECHANICAL EQUIPMENT FOR TELEPHONE LOCATION.

6. REFER TO PLATE E-502 FOR MOUNTING DETAILS.

3/16" = 1'-0" 5' 0 5' 10'

US Army Corps of Engineers
Seattle District

Symbol	Description	Date	Appr.	Symbol	Description
		/ /			

Date: 16 MAR 06
File: E-56-14-19
Rev.

Designed by: LAM
Drawn by: BAZE
Checked by: MASTEN
Prepared by:

U.S.ARMY ENGINEER DISTRICT,SEATTLE
CORPS OF ENGINEERS
SEATTLE, WASHINGTON

ADDITIONAL WATER STORAGE PROJECT
HOWARD HANSON DAM
15TH FLOOR AND ROOF
PLANS FOR ELEVATIONS
1245.00' AND 1257.00'
GREEN RIVER WASHINGTON

Plate number:
E-114
Sheet of

FILE: I:\AECDESIGNS\HHAWE\Electrical\HHAWE-114S14.DGN
DESIGN FILE:
DATE AND TIME PLOTTED: 07-AUG-2008 12:28

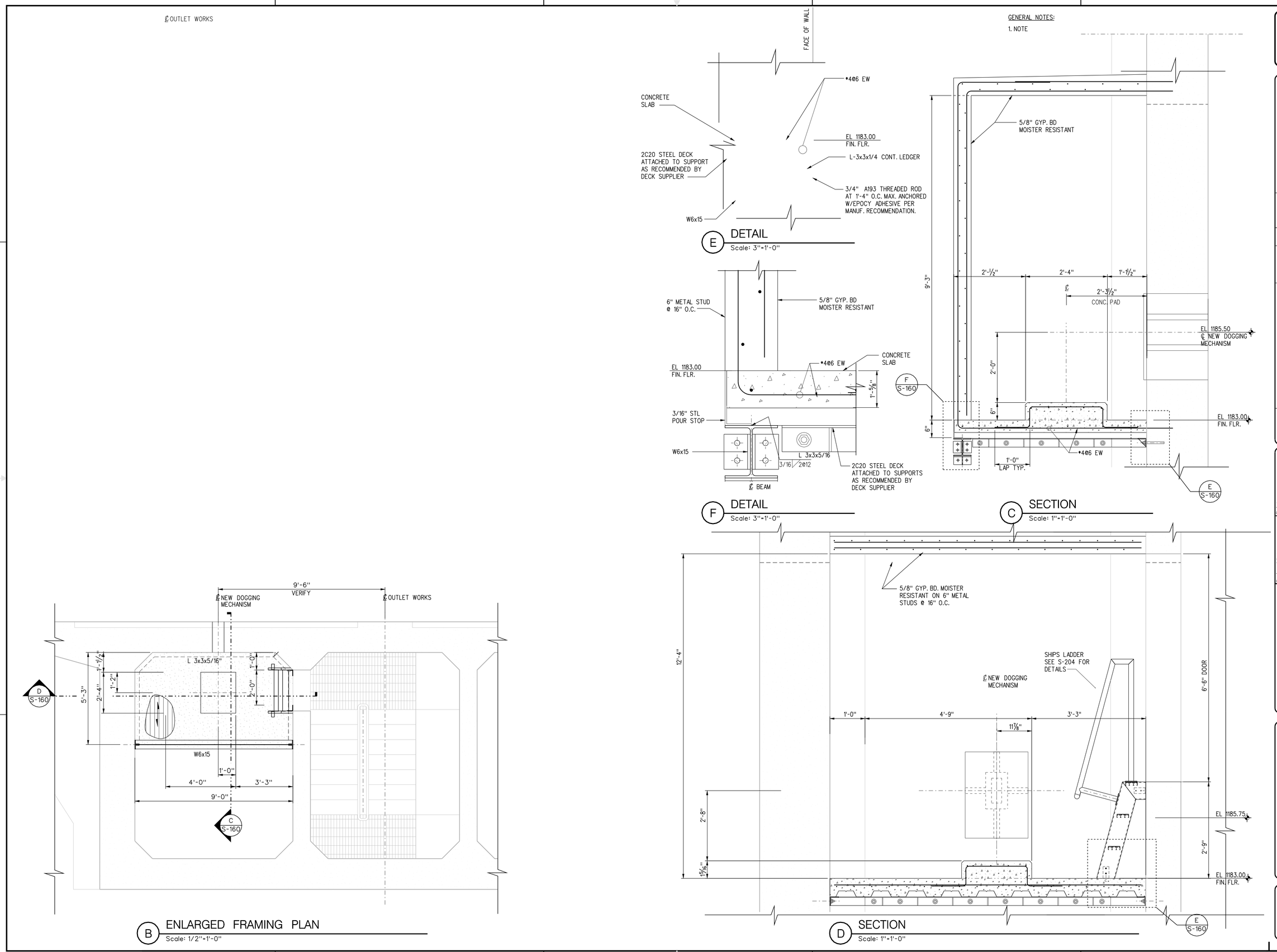

US Army Corps of Engineers
Seattle District

Symbol	Description	Date	Appr.	Symbol	Description
		/ /			

Designed by:
Drawn by:
Checked by:
Date: 16 MAR 06
File: E-56-14-19
Rev.

U.S. ARMY ENGINEER DISTRICT, SEATTLE
CORPS OF ENGINEERS
SEATTLE, WASHINGTON
Prepared by:

ADDITIONAL WATER STORAGE PROJECT
HOWARD HANSON DAM
DOGGING DEVICE RELOCATION
FRAMING SECTIONS & DETAILS
GREEN RIVER WASHINGTON

Plate number:
E-115
Sheet of

DESIGN FILE: I:\AECDESIGNS\HHAW\Electrical\HHAWE-115DOG.DGN
DATE AND TIME PLOTTED: 07-AUG-2008 12:29

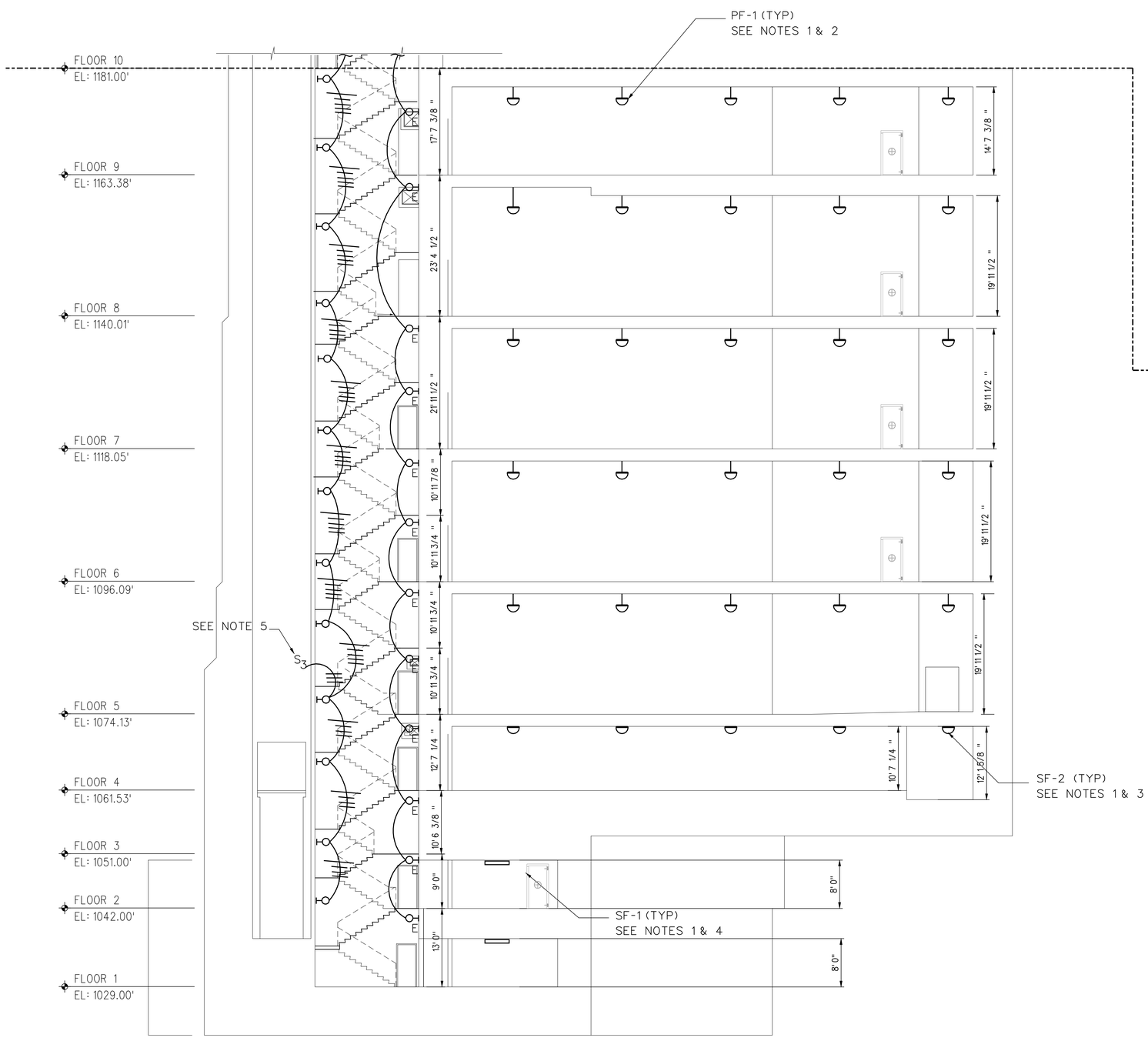

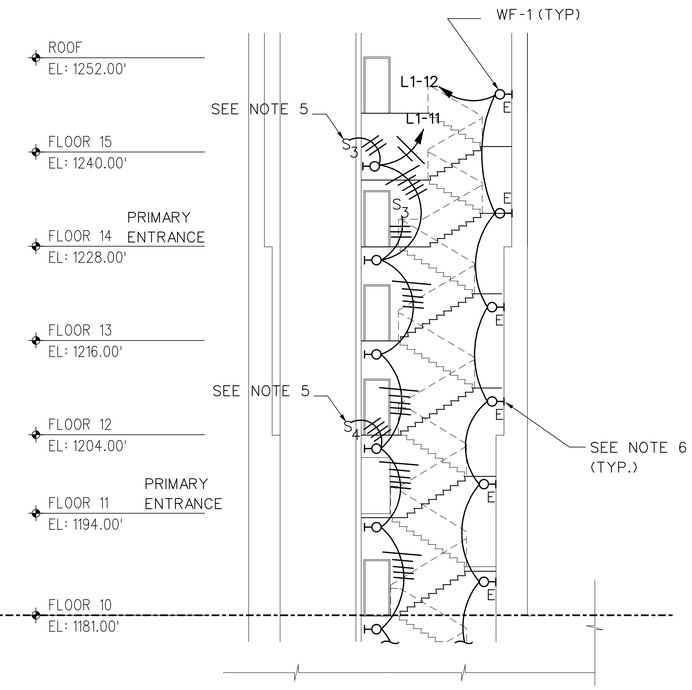

NOTES:

1. REFER TO FLOOR PLAN FOR LIGHTING CIRCUIT IDENTIFICATIONS.

2. MOUNT SO THAT BOTTOM OF LIGHTING FIXTURE IS 10' AFF.

3. CEILING MOUNT LIGHTING FIXTURE IN THIS AREA.

4. WALL MOUNT LIGHTING FIXTURE 7' AFF.

5. FIXTURES SHALL BE CONTROLLED BY THREE-WAY SWITCHING LOCATED AT THE DOOR INTO THE STAIRS.

6. LIGHTING FIXTURE WITH LETTER "E" INDICATES FIXTURE WITH AN EMERGENCY BALLAST.

GALLERY PROFILE SECTION

1/8"=1'-0"

0' 8' 16'

US Army Corps of Engineers
Seattle District

Symbol	Description	Appr.	Date
			/ /

U.S.ARMY ENGINEER DISTRICT,SEATTLE
CORPS OF ENGINEERS
SEATTLE, WASHINGTON

Prepared by:

Designed by: LAM
Drawn by: BAZE
Checked by: MASTEN

Date: 16 MAR 06
File: E-56-14-19
Rev.

ADDITIONAL WATER STORAGE PROJECT
HOWARD HANSON DAM
GREEN RIVER

STAIRS & GALLERY LIGHTING PLAN - FACILITIES SECTION B

WASHINGTON

Plate number:
E-301
Sheet of

DATE AND TIME PLOTTED: 07-AUG-2008 12:29
DESIGN FILE: J:\AECDESIGNS\HHAW\Electrical\HHAWE-301SCB.DGN

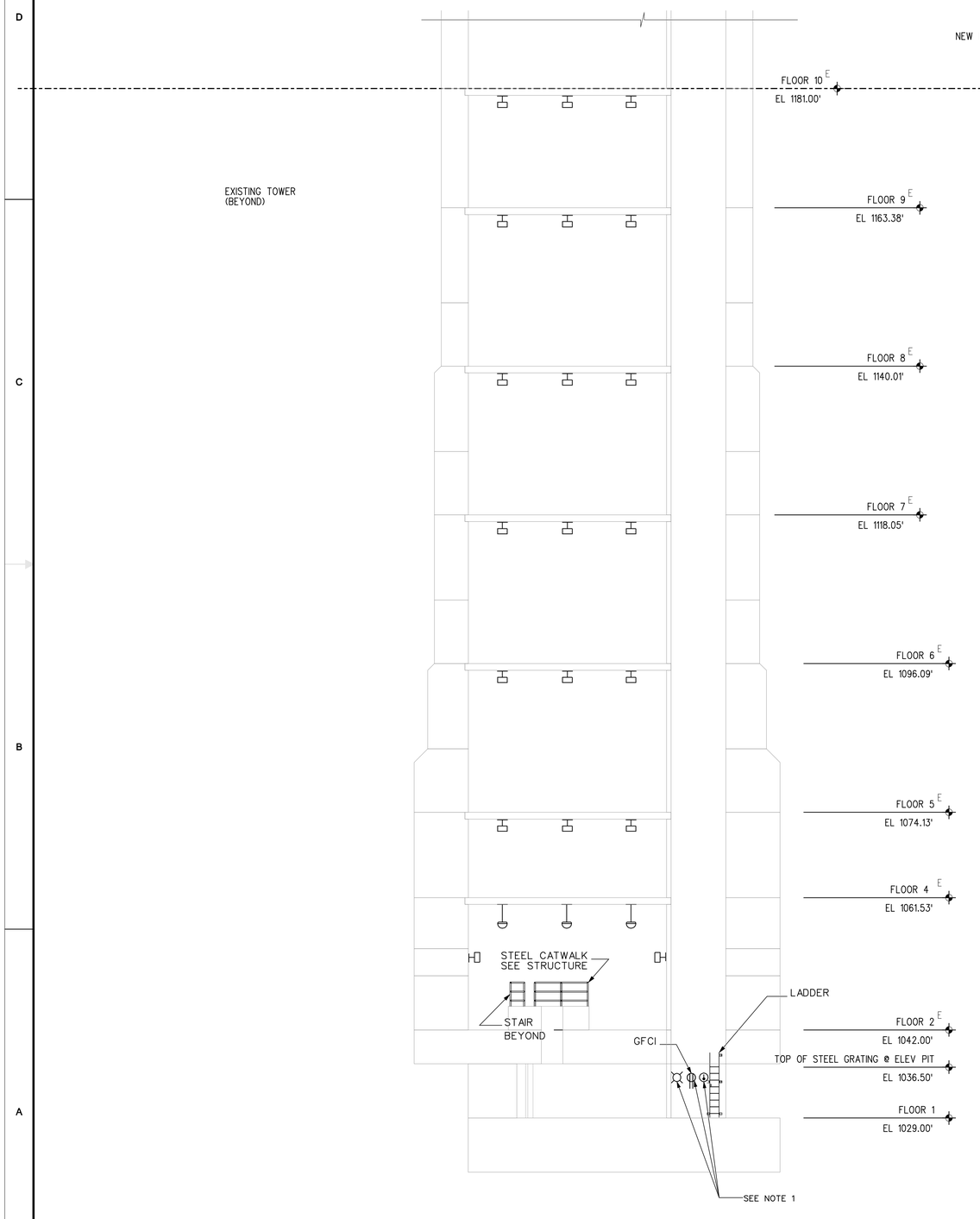

A ELEVATOR SHAFT SECTION
1/8"=1'-0"

0' 8' 16'

NOTES:

1. MOUNT HEAT DETECTOR, RECEPTACLE, AND LIGHT ON ELEVATOR PIT WALL AT 43" ABOVE PIT FLOOR. LOCATE DEVICES TO AVOID SPRAY FROM PIT SPRINKLER. PROVIDE TAMPER SWITCH ON VALVE OR SPRINKLER IN THE PIT.

2. SMOKE AND HEAT DETECTOR LOCATED IN CEILING OF ELEVATOR EQUIPMENT ROOM.

US Army Corps of Engineers
Seattle District

Symbol	Description	Appr.	Date
			/ /

Designed by: LAM
Drawn by: BAZE
Checked by: MASTEN
Date: 16 MAR 06
File #: E-56-14-19
Rev.

U.S.ARMY ENGINEER DISTRICT,SEATTLE
CORPS OF ENGINEERS
SEATTLE, WASHINGTON
Prepared by:

ADDITIONAL WATER STORAGE PROJECT
HOWARD HANSON DAM
GREEN RIVER WASHINGTON

ELEVATOR SHAFT SECTION

Plate number:
E-302
Sheet of

DATE AND TIME PLOTTED: 07-AUG-2008 12:29
DESIGN FILE: I:\AECDESIGNS\HHAW\Electrical\HHAWE_302S02.DGN

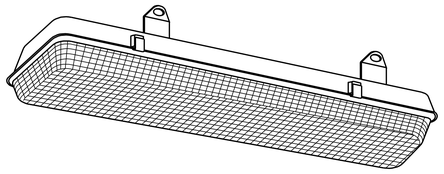

LAMP TYPE : T8, 32W
PROFILE : 2 LAMPS
BALLAST : ELECTRONIC, ENERGY SAVING
ELECTRIC : 277VAC, 60HZ, 1 PH
HOUSING : DIE-FORMED 20 GAUGE REINFORCED FIBERGLASS HOUSING
MOUNTING : WALL OR SURFACE MOUNT
LENS : INJECTION MOLDED ACRYLIC PRISMATIC
FINISH : WHITE POLYESTER POWDER COAT
SHIELDING : CLEAR STIPPLED ACRYLIC DIFFUSER
UL : LISTED FOR DAMP OR WET LOCATIONS
NOM. SIZE : 4' X 7½"

SF1 ENCLOSED & GASKETED FLUORESCENT
WF1 ENCLOSED & GASKETED FLUORESCENT
NOT TO SCALE

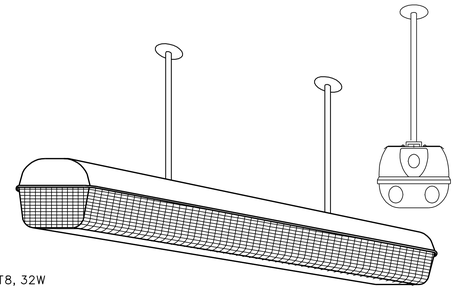

LAMP TYPE : T8, 32W
PROFILE : 2 LAMPS
BALLAST : ELECTRONIC, ENERGY SAVING
ELECTRIC : 277VAC, 60HZ, 1 PH
HOUSING : DIE-FORMED 20 GAUGE REINFORCED FIBERGLASS HOUSING
MOUNTING : PENDANT MOUNT
LENS : INJECTION MOLDED ACRYLIC PRISMATIC
FINISH : WHITE POLYESTER POWDER COAT
SHIELDING : CLEAR STIPPLED ACRYLIC DIFFUSER
UL : LISTED FOR DAMP OR WET LOCATIONS
NOM. SIZE : 4' X 7½"

PF2 PENDANT MOUNT
NOT TO SCALE

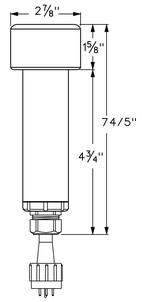

LAMP TYPE : BRIGHT, WHITE LED'S
PROFILE : 18
BALLAST : ELECTRONIC, ENERGY SAVING
ELECTRIC : 277VAC - 24VDC, 60HZ, 1 PH
LENS : HIGH PERFORMANCE POLYMER
HOUSING : TITANIUM
MOUNTING : PENDANT MOUNT
UL : SPECIFICALLY FOR LONG TERM IMMERSION
NOM. SIZE : 2⅞" X 7 4/5"

WL1 - WHITE LED
NOT TO SCALE

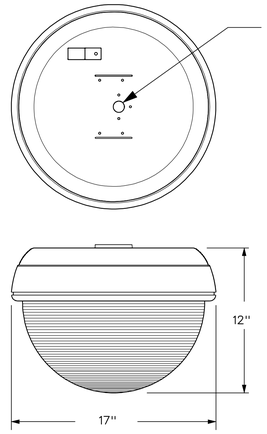

LAMP TYPE : 42W
PROFILE : 4 LAMPS
BALLAST : ELECTRONIC, ENERGY SAVING
ELECTRIC : 277VAC, 60HZ, 1 PH
HOUSING : HIGH QUALITY DIE-CAST
FINISH : STANDARD POLYESTER POWDER COAT
MOUNTING : PENDANT OR SURFACE MOUNT ON CEILING
UL : FOR DAMP OR WET LOCATIONS
NOM. SIZE : 12" X 17"

SF2 INDUSTRIAL COMPACT FLUORESCENT
PF1 INDUSTRIAL COMPACT FLUOURESCENT
NOT TO SCALE



LAMP TYPE : 70W METAL HALIDE
PROFILE : 1 LAMP
BALLAST : HIGH POWER FACTOR
ELECTRIC : 277VAC (WM1), 60HZ, 1 PH
HOUSING : SINGLE PIECE DIE-CAST ALUMINUM SOFT TRAPEZOIDAL WEDGE.
REFLECTOR : HIGHLY SPECULAR ALUMINUM WITH WIDE THROW DISTRIBUTION.
FINISH : TEXTURED SEMI-GLOSS POLYESTER POWDER COAT
SHIELDING : GLASS LENS, ONE-PIECE GASKET.
NOM. SIZE : 16" X 9" X 7"
OTHER : TYPE III, MEDIUM DISTRIBUTION, ISENA FULL CUTOFF CLASSIFICATION.

WM2 WALL MOUNTED FIXTURE
NOT TO SCALE



LAMP TYPE : DIFFUSED RED LED
ELECTRIC : 277VAC
HOUSING : DIE CAST ALUMINUM
MOUNTING : UNIVERSAL
LENS : POLYCARBONATE
FINISH : BRUSHED ALUMINUM
NOM. SIZE : 8½" X 12¾"
OTHER : UNIT SHALL FLASH UPON ACTIVATION OF FIRE ALARM SYSTEM.

EXIT SIGN
NOT TO SCALE

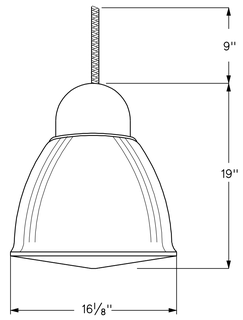

LAMP TYPE : 175W, METAL HALIDE
PROFILE : 1 LAMP
BALLAST : ELECTRONIC, ENERGY SAVING
ELECTRIC : 277VAC, 60HZ, 1 PH
HOUSING : HIGH QUALITY DIE-CAST
FINISH : PAINTED, NON-STICK OR ANODIZED FINISH
MOUNTING : PENDANT MOUNT ON CEILING
UL : FOR DAMP OR WET LOCATIONS
NOM. SIZE : 16⅛" X 19"

PF3 METAL HALIDE FIXTURE
NOT TO SCALE

LIGHTING FIXTURE SCHEDULE

SYMBOL	LAMP INFORMATION				VOLTS	MOUNTING/REMARKS
	TYPE	NO.	WATTS	LUMENS		
PF1	COMPACT FLUORESCENT	4	42	12800	277	LOW BAY - INDUSTRIAL PENDANT FIXTURE BOTTOM OF FIXTURES SHALL BE 15' AFF (ELE. 1042) BOTTOM OF THE FIXTURES SHALL BE 10' AFF (FISH COLLECTORS)
PF2	FLUORESCENT	2	32	5320	277	ENCLOSED & GASKETED 4' PENDANT FIXTURE BOTTOM OF THE FIXTURES SHALL BE 10' AFF
PF3	METAL HALIDE	1	175	22000	277	METAL HALIDE FIXTURE PENDANT MOUNT (ELE. 1194)
SF1	FLUORESCENT	2	32	5320	277	ENCLOSED & GASKETED 4' SURFACE MOUNTED FIXTURE
SF2	COMPACT FLUORESCENT	4	42	12800	277	LOW BAY INDUSTRIAL SURFACE MOUNTED FIXTURE
WF1	FLUORESCENT	2	32	5320	277	ENCLOSED & GASKETED 4' WALL MOUNTED FIXTURE BOTTOM OF THE FIXTURES SHALL BE 10' AFF
WL1	WHITE LED				277VAC - 24VDC	SURFACE MOUNTED FISH COLLECTOR
WM1	METAL HALIDE	1	400	23500	277	WALL MOUNTED OUTSIDE TOWER (ON TOP)
WM2	METAL HALIDE	1	70	5700	277	WALL MOUNTED ABOVE THE DOOR (ELE. 1228)
WM3	METAL HALIDE	1	1000	85500	277	WALL MOUNTED OUTSIDE TOWER (ON TOP)
EXIT	LED				277	ARROWS ON PLANS DEPICT DIRECTIONALS

LIGHTING FIXTURE SCHEDULE
NOT TO SCALE

US Army Corps of Engineers
Seattle District

Symbol	Description	Appr.	Date
			/ /

Designed by: LAM
Drawn by: BAZE
Checked by: MASTEN
Date: 16 MAR 06
File • E-56-14-19
Rev.

U.S.ARMY ENGINEER DISTRICT, SEATTLE CORPS OF ENGINEERS
SEATTLE, WASHINGTON
Prepared by:

ADDITIONAL WATER STORAGE PROJECT
HOWARD HANSON DAM
DETAILS I
GREEN RIVER WASHINGTON

Plate number:
E-501
Sheet of

DESIGN FILE: I:\AECDESIGNS\HHAWE_501DT1.DGN
DATE AND TIME PLOTTED: 07-AUG-2008 12:30

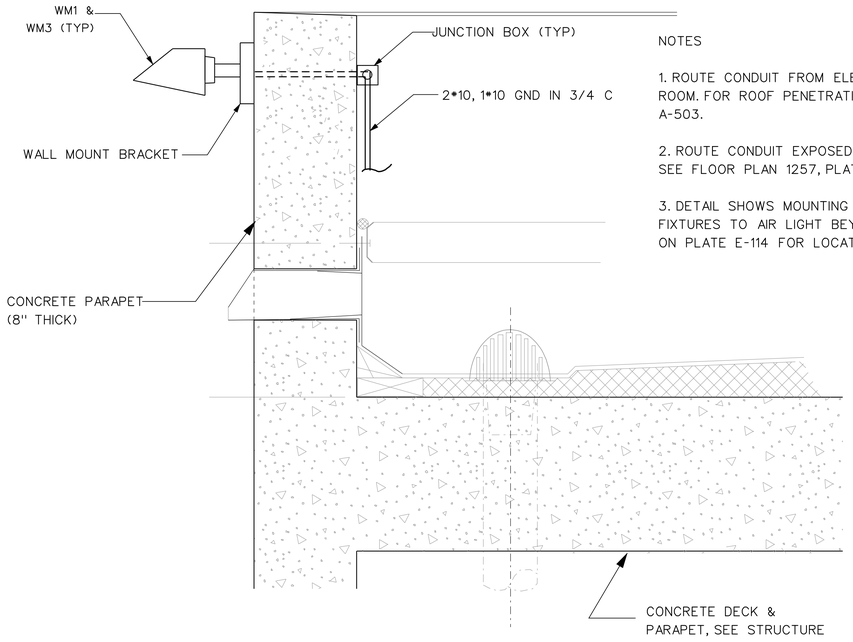

NOTES

1. ROUTE CONDUIT FROM ELEVATION 1257 DOWN TO ELECTRICAL ROOM. FOR ROOF PENETRATION REFER TO DETAIL 18 ON PLATE A-503.

2. ROUTE CONDUIT EXPOSED ON PARAPET WALL TO JUNCTION BOX. SEE FLOOR PLAN 1257, PLATE E-114.

3. DETAIL SHOWS MOUNTING FOR WM1 FIXTURE. FIELD ADJUST WM3 FIXTURES TO AIR LIGHT BEYOND OVERHANG. SEE FLOOR PLAN 1257 ON PLATE E-114 FOR LOCATION OF OVERHANG.

EXTERIOR MOUNTING LIGHTING DETAILS (TOP OF TOWER)

NOT TO SCALE

LAMP TYPE : 400W (WM1) 1000W (WM-3) METAL HALIDE
PROFILE : 1 LAMP
BALLAST : ELECTRONIC
ELECTRIC : 277VAC, 60HZ, 1 PH
HOUSING : FORMED ALUMINUM REFLECTOR
HOUSING WITH CAST ALUMINUM END PLATES
MOUNTING : WALL MOUNT BRACKETS
REFLECTOR : ONE-PIECE, PARABOLIC, SPECULAR, ANODIZED ALUMINUM
LEN : CLEAR, FLAT TEMPERED GLASS LENS
FINISH : WHITE OR PLATINUM SILVER POWDER PAINT
UL : LISTED IN WET LOCATIONS
NOM. SIZE : 22 3/4" X 25" X 38 1/4"
OTHERS : OPTICAL SYSTEM 400W (HORIZONTAL X VERTICAL DEGREES AT 119 X 128)
OPTICAL SYSTEM 1000W (HORIZONTAL X VERTICAL DEGREES AT 124 X 126)

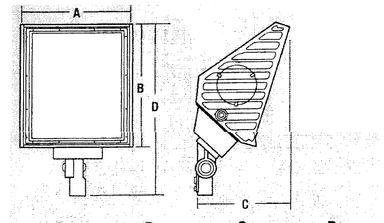

A	B	C	D
22 3/4"	25"	19 3/4"	38 1/4"
559 mm	635 mm	502 mm	972 mm

WM1 & WM3 EXTERIOR LIGHTING (TOP OF TOWER)

NOT TO SCALE

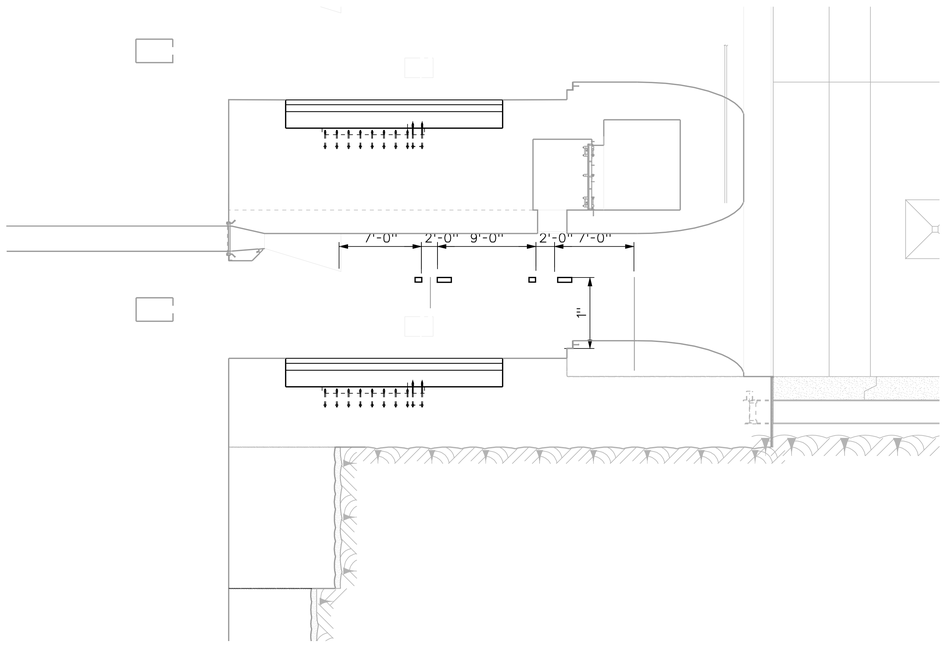

LED & CAMERA MOUNTING DETAILS

NOT TO SCALE

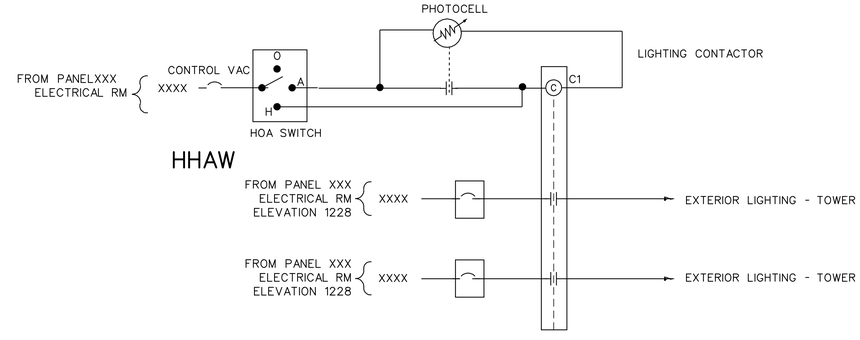

EXTERIOR LIGHTING CONTROL

NOT TO SCALE

US Army Corps of Engineers
Seattle District

Symbol	Description	Appr.	Date
			/ /

Designed by: LAM
Drawn by: BAZE
Checked by: MASTEN
Date: 16 MAR 06
File: E-56-14-19
Rev.

U.S.ARMY ENGINEER DISTRICT,SEATTLE
CORPS OF ENGINEERS
SEATTLE, WASHINGTON
Prepared by:

ADDITIONAL WATER STORAGE PROJECT
HOWARD HANSON DAM
GREEN RIVER WASHINGTON

DETAILS II

Plate number:
E-502
Sheet of

DATE AND TIME PLOTTED: 07-AUG-2008 12:30
DESIGN FILE: J:\AECDESIGNS\HHAW\Electrical\HHAWE_502DT2.DGN

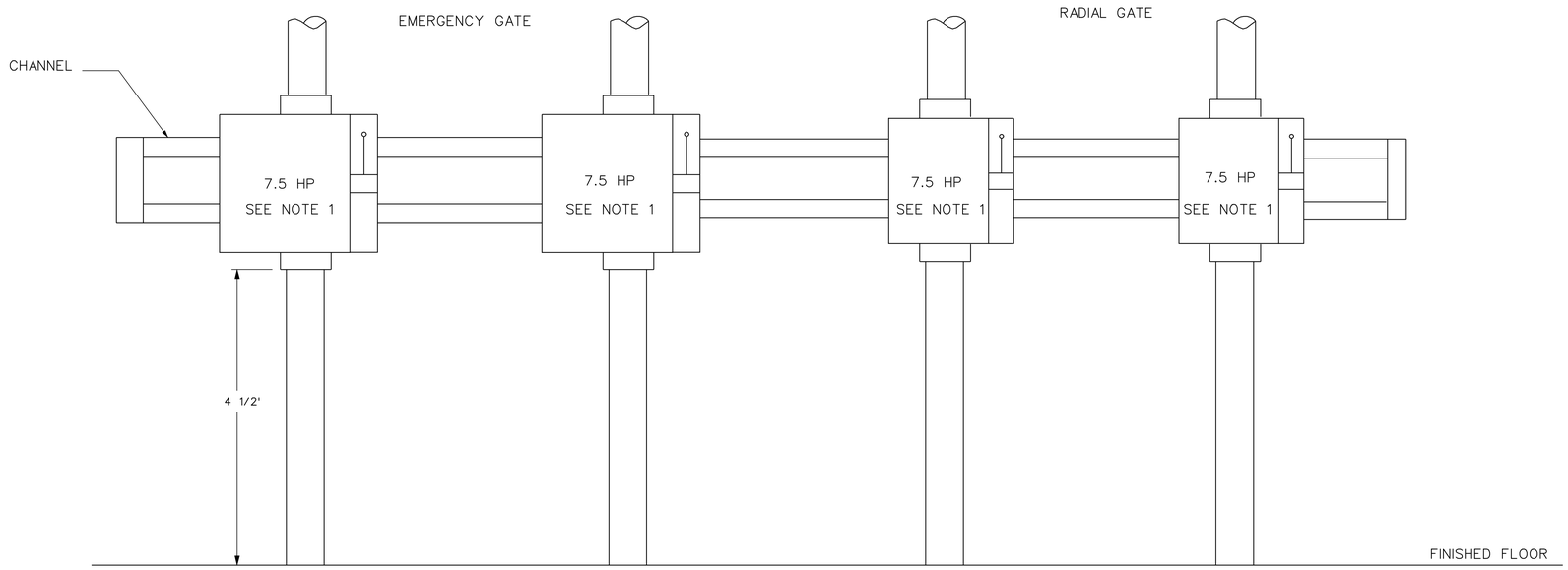

MOTOR DISCONNECT LAYOUT

NOT TO SCALE

NOTES:

1. STAINLESS STEEL SUPPORT GRIP WITH DOUBLE EYE, SPLIT MESH AND ROD CLOSING TO BE USED ON EACH CONDUCTOR WITHIN PULLBOX FOR VERTICAL STRAIN RELIEF.

2. PULLBOX SHALL BE NEMA 4X WITH REMOVXXXXXXXXXXXXXXX

3. LOOP EACH CONDUCTOR WITHIN PULLBOX BEFORE ATTACHING GRIP.

4. FOR CONDUIT AND CONDUCTOR REQUIREMENTS, SEE PANEL SCHEDULES.

5. FOR STARTER SIZE, REFER TO ONE-LINE DIAGRAM, PLATE E-601.

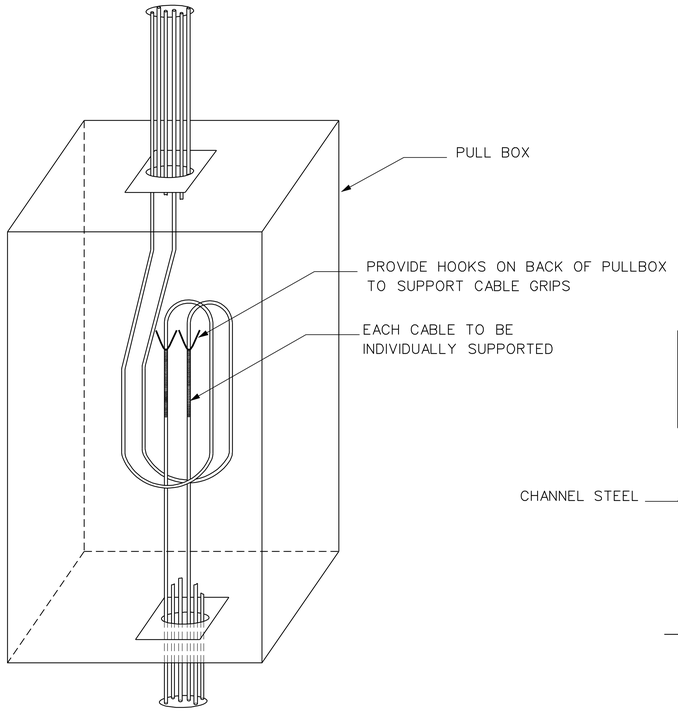

CONDUCTOR SUPPORT DETAIL

NOT TO SCALE

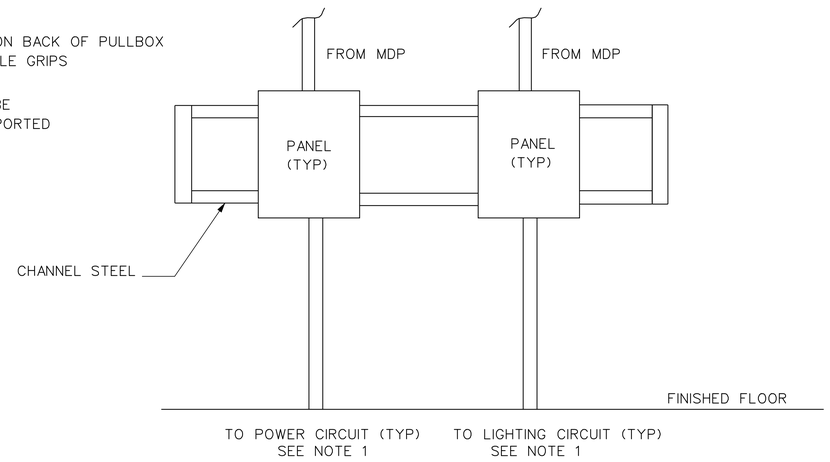

PANEL MOUNTING DETAIL

NOT TO SCALE

2 JACK TELEPHONE DETAILS

NOT TO SCALE

US Army Corps of Engineers
Seattle District

Symbol	Description	Date	Appr.	Symbol	Description
		/ /			

Designed by: MASTEN
Drawn by: BAZE
Checked by: MASTEN
Date: 16 MAR 06
File • E-56-14-19
Rev.

U.S.ARMY ENGINEER DISTRICT, SEATTLE
CORPS OF ENGINEERS
SEATTLE, WASHINGTON
Prepared by:

ADDITIONAL WATER STORAGE PROJECT
HOWARD HANSON DAM
GREEN RIVER WASHINGTON

DETAILS III

Plate number:
E-503
Sheet of

DATE AND TIME PLOTTED: 07-AUG-2008 12:31
DESIGN FILE: I:\AECDESIGNS\HHAW\Electrical\HHAWE_503DT3.DGN

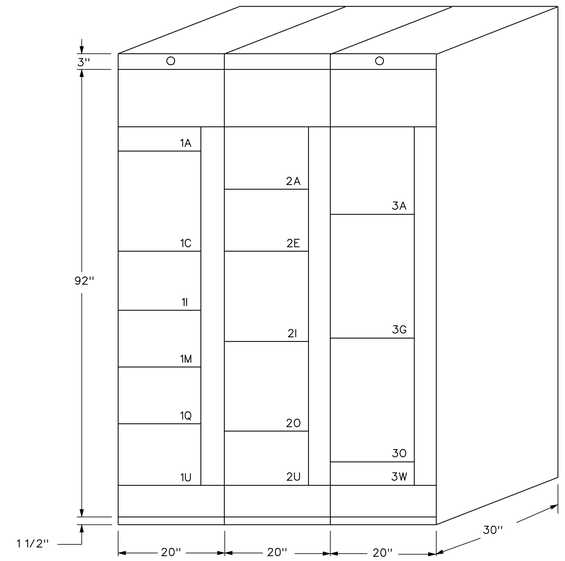

MOTOR CONTROL CENTER (MCC)

NOT TO SCALE

MOTOR CONTROL CENTER SCHEDULE

UNIT LOCATIONS	EQUIPMENT NAME	UNIT TYPE/SIZE/HP			FRAME AMPS/TRIP AMPS & VOLT SYSTEM	NOTES
		UNIT TYPE	SIZE	HP		
1A		MAIN LUGS				
1C	ELEVATOR	CIRCUIT BREAKER	NEMA 3	40	100 AF/100AT, 480 VAC, 3 PH	
1I	HOIST	CIRCUIT BREAKER	NEMA 1	5	100AF/15AT, 480 VAC, 3 PH	
1M	HOIST	CIRCUIT BREAKER	NEMA 1	3	100AF/7AT, 480 VAC, 3 PH	
1Q	HPU-4	CIRCUIT BREAKER	NEMA 2	20	100AF/50AT, 480 VAC, 3 PH	
1U	HPU-2	CIRCUIT BREAKER	NEMA 1	7.5	100AF/15AT, 480 VAC, 3 PH	
2A	HPU-3	CIRCUIT BREAKER	NEMA 2	20	100AF/50AT, 480 VAC, 3 PH	
2E	RADIAL GATE (RP-1)	CIRCUIT BREAKER	NEMA 1	7.5	100AF/15AT, 480 VAC, 3 PH	
2I	RADIAL GATE (RP-1-ALT)	CIRCUIT BREAKER	NEMA 1	7.5	100AF/15AT, 480 VAC, 3 PH	
2Q	EMERGENCY GATE (EP-1)	CIRCUIT BREAKER	NEMA 1	7.5	100AF/15AT, 480 VAC, 3 PH	
2U		SPACE				
3A						
3G		SPACE				
3O		SPACE				
3W		SPACE				

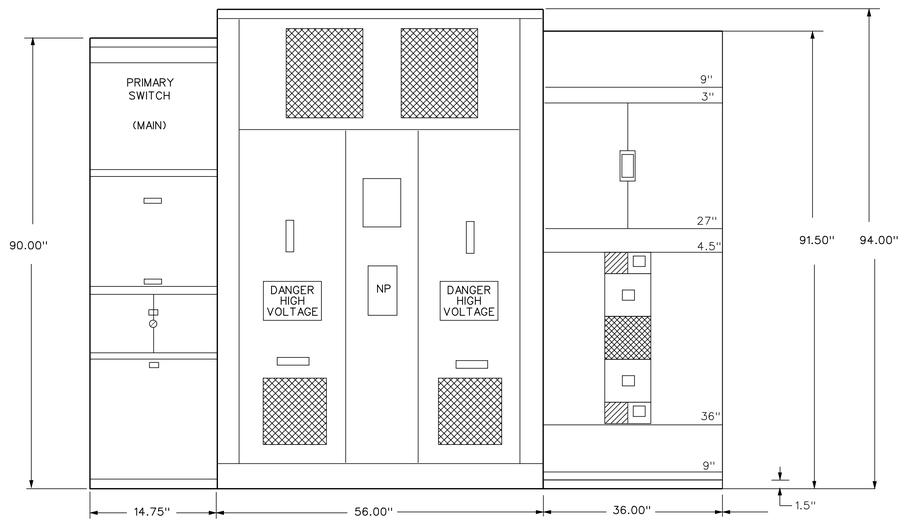

UNIT SUBSTATION (FRONT VIEW)

NOT TO SCALE

NOTES:

1. PROVIDE A 4" HOUSE KEEPING PAD UNDER UNIT SUBSTATION AND MOTOR CONTROL CENTER (MCC). PADS SHALL EXTEND 6 INCHES BEYOND FOOTPRINT OF THE EQUIPMENT.

US Army Corps of Engineers
Seattle District

Symbol	Description	Date	Appr.	Symbol	Description
		/ /			

Designed by: LAM
Drawn by: BAZE
Checked by: MASTEN
Date: 16 MAR 06
File * E-56-14-19
Rev.

U.S.ARMY ENGINEER DISTRICT,SEATTLE
CORPS OF ENGINEERS
SEATTLE, WASHINGTON

Prepared by:

ADDITIONAL WATER STORAGE PROJECT
HOWARD HANSON DAM

DETAILS IV

GREEN RIVER WASHINGTON

Plate number:
E-504
Sheet of

DESIGN FILE: I:\AECDESIGNS\HHAW\Electrical\HHAWE_5040T4.DGN
DATE AND TIME PLOTTED: 07-AUG-2008 12:31

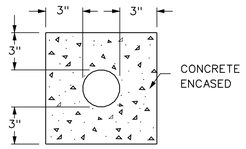

SECTION A-A, F-F & I-I
CONCRETE ENCASED

1 WAY DUCT BANK

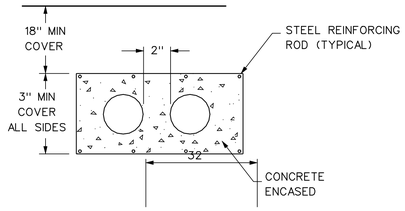

SECTION B-B & B1-B1

2 WAY REINFORCED POWER DUCT BANK

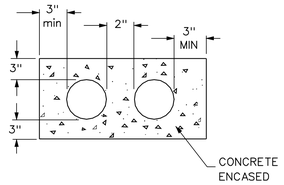

SECTION B-B & B1-B1

2 WAY POWER DUCT BANK

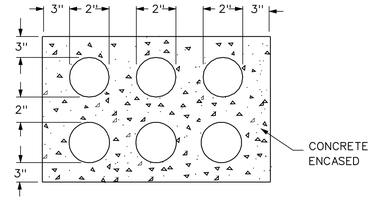

SECTION H-H

6 WAY POWER DUCT BANK

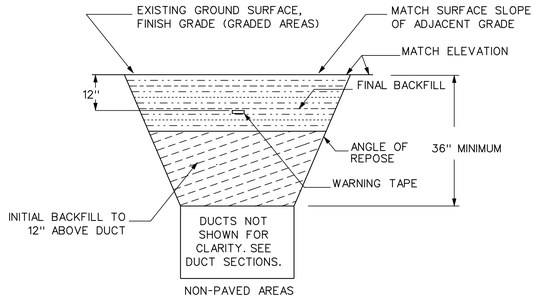

NON-PAVED AREAS

TRENCH DETAIL FOR NON-PAVED AREAS

NOT TO SCALE

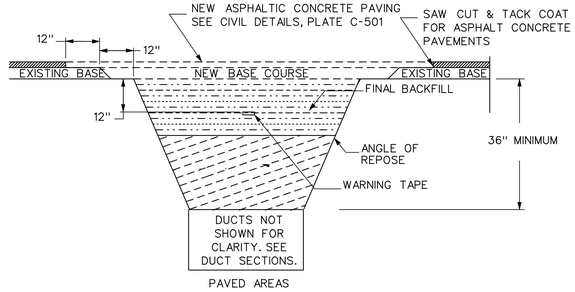

PAVED AREAS

TRENCH DETAIL FOR PAVED AREAS

NOT TO SCALE

NOTES.

1. DUCT BANK DRAWINGS ARE NOT TO SCALE. CONDUITS DRAWN ARE NOT PROPORTIONAL TO ACTUAL SIZE. SEE PLATE E-603 FOR DUCT BANK SCHEDULE.

2. PULL WIRE IS TO BE INSTALLED IN ALL SPARE CONDUITS.

3. DUCT BANK FOR PRIMARY POWER AND MAIN COMMUNICATIONS SHALL BE CONCRETE ENCASED. TRUNK LINES FOR BUILDING SERVICES, EXTERIOR BRANCH CIRCUITS AND SITE LIGHTING SHALL BE DIRECT BURIED PVC EXCEPT UNDER PAVED AREAS. SEE NOTE 4.

4. ALL DUCT BANKS CROSSING UNDER PAVED ROADS OR AREAS SUBJECT TO VEHICLE TRAFFIC SHALL BE CONCRETE ENCASED, STEEL REINFORCED.

5. PRIMARY DISTRIBUTION SYSTEM GROUND CONDUCTOR (NOT SHOWN IN DUCT DETAILS FOR CLARITY), SHALL BE PLACED AT THE BOTTOM OF THE CONCRETE ENCASEMENT BELOW THE PRIMARY DUCTS.

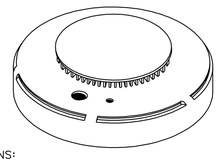

SPECIFICATIONS:

OPERATING VOLTAGE	: 120VAC, 50/60HZ WITH BATTERY BACKUP
OPERATING CURRENT	: 130mA, 1.8W MAXIMUM
SENSITIVITY	: 0.83%/FT. MINIMUM TO 2.46%/FT. MAXIMUM
ALARM HORN RATING	: 85dB AT 10 FEET, ANSI S3.41
OPERATING TEMPERATURE	: 40° TO 100° F (4.4 TO 37.8 C)
OPERATING HUMIDITY	: 0 TO 95% NON-CONDENSING
TANDUM OPERATION	: UP TO 12 DETECTORS

SINGLE STATION SMOKE DETECTOR
AUDIO ONLY

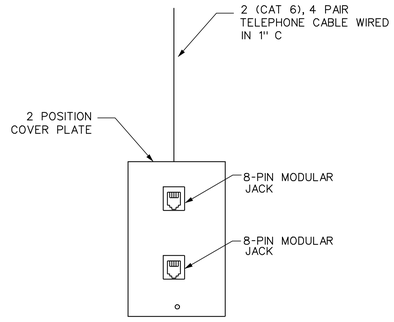

WALL TELEPHONE OUTLET
TWO JACK

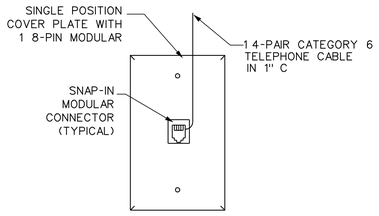

WALL TELEPHONE OUTLET
SINGLE JACK

US Army Corps of Engineers
Seattle District

Symbol	Description	Date	Appr.	Symbol	Description
		/ /			

Date: 16 MAR 06
File: E-56-14-19
Rev.

Designed by: MASTEN
Drawn by: BAZE
Checked by: MASTEN

U.S.ARMY ENGINEER DISTRICT, SEATTLE
CORPS OF ENGINEERS
SEATTLE, WASHINGTON
Prepared by:

ADDITIONAL WATER STORAGE PROJECT
HOWARD HANSON DAM
DETAILS V
GREEN RIVER WASHINGTON

Plate number:
E-505
Sheet of

DATE AND TIME PLOTTED: 07-AUG-2008 12:32
DESIGN FILE: I:\AECDESIGNS\HHAW\Electrical\HHAWE_505DT5.DGN

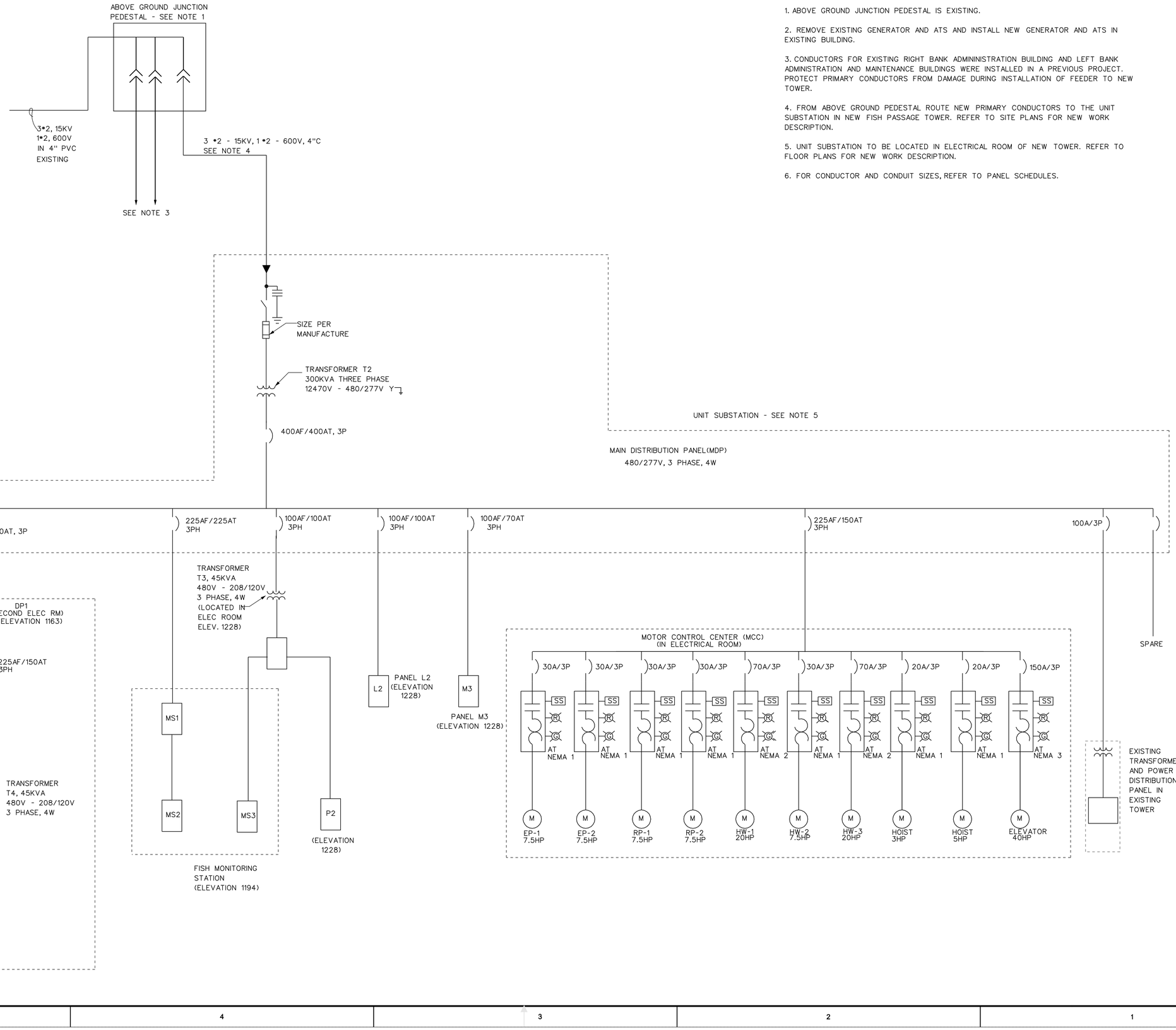

NOTES:

1. ABOVE GROUND JUNCTION PEDESTAL IS EXISTING.

2. REMOVE EXISTING GENERATOR AND ATS AND INSTALL NEW GENERATOR AND ATS IN EXISTING BUILDING.

3. CONDUCTORS FOR EXISTING RIGHT BANK ADMININISTRATION BUILDING AND LEFT BANK ADMINISTRATION AND MAINTENANCE BUILDINGS WERE INSTALLED IN A PREVIOUS PROJECT. PROTECT PRIMARY CONDUCTORS FROM DAMAGE DURING INSTALLATION OF FEEDER TO NEW TOWER.

4. FROM ABOVE GROUND PEDESTAL ROUTE NEW PRIMARY CONDUCTORS TO THE UNIT SUBSTATION IN NEW FISH PASSAGE TOWER. REFER TO SITE PLANS FOR NEW WORK DESCRIPTION.

5. UNIT SUBSTATION TO BE LOCATED IN ELECTRICAL ROOM OF NEW TOWER. REFER TO FLOOR PLANS FOR NEW WORK DESCRIPTION.

6. FOR CONDUCTOR AND CONDUIT SIZES, REFER TO PANEL SCHEDULES.

US Army Corps of Engineers
Seattle District

Symbol	Description	Date	Appr.	Symbol	Description
		/ /			

Date: 16 MAR 06
File • E-56-14-19
Rev.

Designed by: MASTEN/LAM
Drawn by: LAM
Checked by: MASTEN

U.S.ARMY ENGINEER DISTRICT,SEATTLE
CORPS OF ENGINEERS
SEATTLE, WASHINGTON
Prepared by:

ADDITIONAL WATER STORAGE PROJECT
HOWARD HANSON DAM
GREEN RIVER WASHINGTON

ONE-LINE DIAGRAM

Plate number:
E-601
Sheet of

DATE AND TIME PLOTTED: 07-AUG-2008 12:32
DESIGN FILE: J:\AECDESIGNS\HHAWE\Electrical\HHAWE-601OL1.DGN

PANEL MDP
400 AMP MAIN BREAKER FRAME W/ 400A TRIP, SURFACE MOUNT
480/277 VOLTS, 3 PHASE, 4 WIRE

CKT. NO.	NO. POLES	CKT. COND	TRIP AMP.	GROUND	CONDUIT	LOAD SERVED	CONNECTED LOAD - V.A			CONNECTED LOAD - V.A.			LOAD SERVED	CONDUIT	GROUND	TRIP AMP.	CKT. COND	NO. POLES	CKT. NO.
							A	B	C	A	B	C							
1	3	1/0	150	6	2	PANEL DP1	30277			29370			MCC	2	8	110	1	3	2
3								30277			29370								4
5									30277			29370							6
7	3	4/0	225	4	3	PANEL MS1	53050			17667			EXISTING TOWER	2	8	100	1	3	8
9								53050			17667								10
11									53050			17667							12
13	3	4	70	8	1.25	PANEL M3	10150			12753			PANEL L2	2	8	70	1	3	14
15								10150			12753								16
17									10150			12753							18
19						SPARE							SPARE						20
21						SPARE							SPARE						22
23																			24
						TOTAL CONNECTED LOAD	459.801	(KVA)	1	DEMAND			459.801	DEMAND LOAD (KVA)					

PANEL DP1
225 AMP MAIN BREAKER FRAME W/ 200 A TRIP, SURFACE MOUNT
480/277 VOLTS, 3 PHASE, 4 WIRE

CKT. NO.	NO. POLES	CKT. COND	TRIP AMP.	GROUND	CONDUIT	LOAD SERVED	CONNECTED LOAD - V.A			CONNECTED LOAD - V.A.			LOAD SERVED	CONDUIT	GROUND	TRIP AMP.	CKT. COND	NO. POLES	CKT. NO.
							A	B	C	A	B	C							
1	3	4	70	8	1.25	PANEL M1	25583			4693			PANEL L1	1	10	40	8	3	2
3								25583			4693								4
5									25583			4693							6
7						SPARE							SPARE						8
9						SPARE							SPARE						10
11													SPARE						12
13													SPARE						14
15																			16
17																			18
19																			20
21																			22
23																			24
						TOTAL CONNECTED LOAD	90.828	(KVA)	1	DEMAND			90.828	DEMAND LOAD (KVA)					

PANEL DP1
225 AMP MAIN BREAKER FRAME W/ 200 A TRIP, SURFACE MOUNT
480/277 VOLTS, 3 PHASE, 4 WIRE

CKT. NO.	NO. POLES	CKT. COND	TRIP AMP.	GROUND	CONDUIT	LOAD SERVED	CONNECTED LOAD - V.A			CONNECTED LOAD - V.A.			LOAD SERVED	CONDUIT	GROUND	TRIP AMP.	CKT. COND	NO. POLES	CKT. NO.
							A	B	C	A	B	C							
1	3	4	70	8	1.25	PANEL M1	25583			4693			PANEL L1	1	10	40	8	3	2
3								25583			4693								4
5									25583			4693							6
7						SPARE							SPARE						8
9						SPARE							SPARE						10
11													SPARE						12
13													SPARE						14
15																			16
17																			18
19																			20
21																			22
23																			24
						TOTAL CONNECTED LOAD	90.828	(KVA)	1	DEMAND			90.828	DEMAND LOAD (KVA)					

NOTES:

1. FOR QUANTITY AND SIZE OF CONDUIT AND CONDUCTORS FEEDING PANELS, REFER TO POWER ONE-LINE DIAGRAM, PLATE E-601.

2. ALL PANELBOARDS SHALL HAVE SEPARATE NEUTRAL AND GROUND BUS.

3. ALL RECEPTACLE CIRCUITS SHALL HAVE SEPARATE NEUTRAL CONDUCTORS.

US Army Corps of Engineers
Seattle District

Symbol	Description	Date
		/ /

Appr.	Symbol	Description

Designed by: LAM
Drawn by: BAZE
Checked by: MASTEN
Prepared by:

Date: 16 MAR 06
File: E-56-14-19
Rev.

U.S.ARMY ENGINEER DISTRICT,SEATTLE
CORPS OF ENGINEERS
SEATTLE, WASHINGTON

ADDITIONAL WATER STORAGE PROJECT
HOWARD HANSON DAM
GREEN RIVER WASHINGTON

PANEL SCHEDULE 1

Plate number:
E-602
Sheet of

DATE AND TIME PLOTTED: 07-AUG-2008 12:32
DESIGN FILE: I:\AECDESIGNS\HHAWE\Electrical\HHAWE-602PS1.DGN

PANEL L1
100 AMP MAIN BREAKER FRAME W/ 40 A TRIP, SURFACE MOUNT
480/277 VOLTS, 3 PHASE, 4 WIRE

CKT. NO.	NO. POLES	CKT. COND	TRIP AMP.	GROUND	CONDUIT	LOAD SERVED	CONNECTED LOAD - V.A			CONNECTED LOAD - V.A.			LOAD SERVED	CONDUIT	GROUND	TRIP AMP.	CKT. COND	NO. POLES	CKT. NO.
							A	B	C	A	B	C							
1	1	10	20	12	3/4	LIGHTS (EL. 1029)	216			1536			LIGHTS IN EL. 1096	3/4	12	20	10	1	2
3	1	10	20	12	3/4	LIGHTS (EL. 1042)		864			1536		LIGHTS IN EL. 1118	3/4	12	20	10	1	4
5	1		20			SPARE			0			1536	LIGHTS IN EL. 1140	3/4	12	20	10	1	6
7	1	10	20	12	3/4	LIGHTS (EL. 1061)	1464			1536			LIGHTS IN EL. 1163	3/4	12	20	10	1	8
9	1	10	20	12	3/4	LIGHTS (EL. 1074)		2232					SPARE			20		1	10
11	1	10	20	12	3/4	STAIR LIGHTS			1368				SPARE			20		1	12
13	1	10	20	12	3/4	STAIR LIGHTS	1296						SPARE			20		1	14
15	1	10	20	12	3/4	ELEVATOR LIGHTS		500					SPARE			20		1	16
17																			18
19																			20
21																			22
23																			24
25																			26
27																			28
29																			30
						TOTAL CONNECTED LOAD	14.08	(KVA)	###	DEMAND			14.08			DEMAND LOAD (KVA)			

PANEL L2
100AMP MAIN BREAKER FRAME W/100A TRIP, SURFACE MOUNT
480/277 VOLTS, 3 PHASE, 4 WIRE

CKT. NO.	NO. POLES	CKT. COND	TRIP AMP.	GROUND	CONDUIT	LOAD SERVED	CONNECTED LOAD - V.A			CONNECTED LOAD - V.A.			LOAD SERVED	CONDUIT	GROUND	TRIP AMP.	CKT. COND	NO. POLES	CKT. NO.
							A	B	C	A	B	C							
1	1	12	20	12	1/2	LIGHTS IN EL. 1181	576			576			LIGHTS IN EL. 1216	1/2	12	20	12	1	2
3	1	12	20	12	1/2	LIGHTS IN EL. 1194		576			576		LIGHTS IN EL. 1228	1/2	12	20	12	1	4
5	1	12	20	12	1/2	LIGHTS IN EL. 1204			576			576	LIGHTS IN EL. 1245	1/2	12	20	12	1	6
7	1	12	20	12	1/2	LIGHTS IN EL. 1257	2400			10000			T5 STEP DOWN TRANSFORMER	1.25	8	70	4	3	8
9	1	12	20	12	1/2	LIGHTS IN EL. 1257		2400			10000								10
11	1		20			SPARE						10000							12
13	1		20			SPARE													14
15	1		20			SPARE													16
17	1		20			SPARE													18
19																			20
21																			22
23																			24
25																			26
27																			28
29																			30
						TOTAL CONNECTED LOAD	38.256	(KVA)	1	DEMAND			38.256			DEMAND LOAD (KVA)			

NOTES:

1. FOR QUANTITY AND SIZE OF CONDUIT AND CONDUCTORS FEEDING PANELS, REFER TO POWER ONE-LINE DIAGRAM, PLATE E-601.

2. ALL PANELBOARDS SHALL HAVE SEPARATE NEUTRAL AND GROUND BUS.

3. ALL RECEPTACLE CIRCUITS SHALL HAVE SEPARATE NEUTRAL CONDUCTORS.

US Army Corps of Engineers
Seattle District

Symbol	Description	Date	Appr.	Symbol	Description
		/ /			

Date: 16 MAR 06
File: E-56-14-19
Rev.

Designed by: LAM
Drawn by: BAZE
Checked by: MASTEN

U.S.ARMY ENGINEER DISTRICT,SEATTLE
CORPS OF ENGINEERS
SEATTLE, WASHINGTON
Prepared by:

ADDITIONAL WATER STORAGE PROJECT
HOWARD HANSON DAM
GREEN RIVER WASHINGTON

PANEL SCHEDULE 2

Plate number:
E-603
Sheet of

FILE: I:\AECDESIGNS\HHAW\Electrical\HHAWE_603PS2.DGN
DESIGN FILE:
DATE AND TIME PLOTTED: 07-AUG-2008 12:33

PANEL P1
100 AMP MAIN BREAKER FRAME W/ 60 A TRIP, SURFACE MOUNT
208/120 VOLTS, 3 PHASE, 4 WIRE

CKT. NO.	NO. POLES	CKT. COND	TRIP AMP.	GROUND	CONDUIT	LOAD SERVED	CONNECTED LOAD - V.A			CONNECTED LOAD - V.A.			LOAD SERVED	CONDUIT	GROUND	TRIP AMP.	CKT. COND	NO. POLES	CKT. NO.
							A	B	C	A	B	C							
1	1	10	20	12	3/4	OUTLETS (IN EL.1029)	900			720			OUTLETS IN (EL.1118)	3/4	12	20	10	1	2
3	1	10	20	12	3/4	OUTLETS (IN EL.1042)		900			1000		QUAD (IN EL.1118)	3/4	12	20	10	1	4
5	1		20			SPARE			0				SPARE			20		1	6
7	1	10	20	12	3/4	OUTLETS (IN EL.1061)	720			720			OUTLETS (IN EL.1140)	3/4	12	20	10	1	8
9	1	10	20	12	3/4	QUAD (IN EL.1061)		1000			1000		QUAD (IN EL.1140)	3/4	12	20	10	1	10
11	1		20			SPARE							SPARE			20		1	12
13	1	10	20	12	3/4	OUTLETS (IN EL.1074)	1080			1080			OUTLETS (IN EL.1163)	3/4	12	20	10	1	14
15	1	10	20	12	3/4	QUAD (IN EL.1074)		1000			1000		QUAD (IN EL.1163)	3/4	12	20	10	1	16
17	1		20			SPARE						500	WELDER OUTLET (IN EL.1074)	3/4	12	20	10	2	18
19	1	10	20	12	3/4	OUTLETS (IN EL.1096)	720			500									20
21	1	10	20	12	3/4	QUAD (IN EL.1096)		1000			500		WELDER OUTLET (IN EL.1118)	3/4	12	20	10	2	22
23	2	10	20	12	3/4	WELDER OUTLET (IN EL.1096)			500			500							24
25							500			500			WELDER OUTLET (IN EL.1140)	3/4	12	20	10	2	26
27	2	10	20	12	3/4	WELDER OUTLET (IN EL.1061)		500			500								28
29									500			500	WELDER OUTLET (IN EL.1163)	3/4	12	20	10	2	30
31										500									32
33	1		20			SPARE							SPARE			20		1	34
35	1		20			SPARE							SPARE			20		1	36
37	1		20			SPARE							SPARE			20		1	38
39																			40
41																			42
TOTAL CONNECTED LOAD							18.84	(KVA)	70% DEMAND				13.19	DEMAND LOAD (KVA)					

PANEL P2
100 AMP MAIN BREAKER FRAME W/ 70 A TRIP, SURFACE MOUNT
208/120 VOLTS, 3 PHASE, 4 WIRE

CKT. NO.	NO. POLES	CKT. COND	TRIP AMP.	GROUND	CONDUIT	LOAD SERVED	CONNECTED LOAD - V.A			CONNECTED LOAD - V.A.			LOAD SERVED	CONDUIT	GROUND	TRIP AMP.	CKT. COND	NO. POLES	CKT. NO.
							A	B	C	A	B	C							
1	1	12	20	12	1/2	RECEPTACLES (IN EL. 1181)	720				0		SPARE			20		1	2
3	1	12	20	12	1/2	RECEPTACLES (IN EL. 1194)		0			1000		HWH-2 (IN EL. 1181)	1/2	12	20	12	3	4
5	1	12	20	12	1/2	RECEPTACLES (IN EL. 1204)			720			1000							6
7	1	12	20	12	1/2	RECEPTACLES (IN EL. 1228)	720			1000									8
9	1	12	20	12	1/2	RECEPTACLES (IN EL. 1245)		360			1656		SF-2 (IN EL. 1257)	1	10	40	8	1	10
11	1	12	20	12	1/2	RECEPTACLES (IN EL. 1216)			900			0	SPARE			20		1	12
13	1	8	40	10	1	BARP-3 (IN EL. 1216)	1800			0			SPARE			20		1	14
15	1	10	30	20	3/4	AD-1 (IN EL. 1216)		1176			1000		HWH-1 (IN EL. 1194)	1/2	12	20	12	3	16
17	2	12	20	12	1/2	EF-1 (IN EL. 1228)			791			1000							18
19							791			1000									20
21	2	12	15	14	1/2	EF-2 (IN EL. 1257)		250			2906		EF-3 (1216)	1.25	8	70	4	3	22
23									250			2906							24
25	2	12	15	14	1/2	SPARE				1906									26
27																			28
29	1	8	40	10	1	AF-1 (IN EL. 1216)			1656										30
31	1		20			SPARE													32
33	1		20			SPARE													34
35	1		20			SPARE													36
37	1		20			SPARE													38
39																			40
41																			42
TOTAL CONNECTED LOAD							25.51	(KVA)	70% DEMAND				17.86	DEMAND LOAD (KVA)					

Recall to provide power for Control Unit per Eli requested and new adding equipment AD-2 from Dennis

NOTES:

1. FOR QUANTITY AND SIZE OF CONDUIT AND CONDUCTORS FEEDING PANELS, REFER TO POWER ONE-LINE DIAGRAM, PLATE E-601.

2. ALL PANELBOARDS SHALL HAVE SEPARATE NEUTRAL AND GROUND BUS.

3. ALL RECEPTACLE CIRCUITS SHALL HAVE SEPARATE NEUTRAL CONDUCTORS.

US Army Corps of Engineers
Seattle District

Symbol	Description	Appr.	Date
			/ /

Designed by: LAM
Drawn by: BAZE
Checked by: MASTEN
Date: 16 MAR 06
File: E-56-14-19
Rev.

U.S.ARMY ENGINEER DISTRICT, SEATTLE
CORPS OF ENGINEERS
SEATTLE, WASHINGTON
Prepared by:

ADDITIONAL WATER STORAGE PROJECT
HOWARD HANSON DAM

PANEL SCHEDULE 3

GREEN RIVER WASHINGTON

Plate number: E-604
Sheet of

DESIGN FILE: J:\AECDESIGNS\HHAW\Electrical\HHAWE-604PS3.DGN
DATE AND TIME PLOTTED: 07-AUG-2008 12:34

PANEL M1
225 AMP MAIN BREAKER FRAME W/ 150 A TRIP, SURFACE MOUNT
480/277 VOLTS, 3 PHASE, 4 WIRE

CKT. NO.	NO. POLES	CKT. COND	TRIP AMP.	GROUND	CONDUIT	LOAD SERVED	CONNECTED LOAD - V.A A	B	C	CONNECTED LOAD - V.A. A	B	C	LOAD SERVED	CONDUIT	GROUND	TRIP AMP.	CKT. COND	NO. POLES	CKT. NO.
1	3	10	15	12	3/4	CP-7 (EL. 1029)	582			7482			CP-1 (EL. 1061)	1 1/	8	70	4	3	2
3								582			7482								4
5									582			7482							6
7	3	10	20	12	3/4	UH-10 (EL. 1029)	1000			7482			CP-2 (EL. 1061)	1 1/	8	70	4	3	8
9								1000			7482								10
11									1000			7482							12
13	3	10	20	12	3/4	UH-11 (EL. 1029)	1667			1667			UH-12 (EL. 1061)	3/4	12	20	10	3	14
15								1667			1667								16
17									1667			1667							18
19	3	10	20	12	3/4	UH-9 (EL. 1040)	1667						SPARE			20		1	20
21								1667					SPARE			20		1	22
23									1667				SPARE			20		1	24
25	3	4	70	8	1.25	T4 STEP DOWN TRANSFORMER	15000						SPARE			20		1	26
27								15000											28
29									15000										30
31																			32
33																			34
35																			36
37																			38
39																			40
41																			42

TOTAL CONNECTED LOAD 109.64 (KVA) 70% DEMAND 76.75 DEMAND LOAD (KVA)

PANEL M2
225 AMP MAIN BREAKER FRAME W/ 150 A TRIP, SURFACE MOUNT
208/120 VOLTS, 3 PHASE, 4 WIRE

CKT. NO.	NO. POLES	CKT. COND	TRIP AMP.	GROUND	CONDUIT	LOAD SERVED	CONNECTED LOAD - V.A A	B	C	CONNECTED LOAD - V.A. A	B	C	LOAD SERVED	CONDUIT	GROUND	TRIP AMP.	CKT. COND	NO. POLES	CKT. NO.
1	1	8	40	10	1	BARP-1 (EL. 1029)	1800			1800			BARP-2 (EL. 1061)	1	10	40	8	1	2
3	2	10	20	12	3/4	RH-1A (EL. 1051)		1200			1200		RH-2 (EL. 1074)	3/4	12	20	10	2	4
5									1200			1200							6
7	2	10	20	12	3/4	RH-1B (EL. 1051)	1200			1200			RH-3 (EL. 1074)	3/4	12	20	10	2	8
9								1200			1200								10
11	3	8	40	10	1	RH-4 (EL. 1096)			1200			1200	RH-7 (EL. 1163)	1	10	30	10	3	12
13							1200			1200									14
15								1200			1200								16
17	3	8	40	10	1	RH-5 (EL. 1118)			1200			1200	RH-8 (EL. 1163)	1	10	30	10	3	18
19							1200			1200									20
21								1200			1200								22
23	3	8	40	10	1	RH-6 (EL. 1140)			1200			0	SPARE			20		1	24
25							1200			0			SPARE			20		1	26
27								1200			0		SPARE			20		1	28
29	3	6	60	10	1	PANEL P2			8503			0	SPARE			20		1	30
31							8503												32
33								8503											34
35																			36
37																			38
39																			40
41																			42

TOTAL CONNECTED LOAD 56.709 (KVA) 0.7 DEMAND 39.6963 DEMAND LOAD (KVA)

NOTES:

1. FOR QUANTITY AND SIZE OF CONDUIT AND CONDUCTORS FEEDING PANELS, REFER TO POWER ONE-LINE DIAGRAM, PLATE E-601.

2. ALL PANELBOARDS SHALL HAVE SEPARATE NEUTRAL AND GROUND BUS.

3. ALL RECEPTACLE CIRCUITS SHALL HAVE SEPARATE NEUTRAL CONDUCTORS.

US Army Corps of Engineers
Seattle District

Description / Symbol / Appr. / Date / Description / Symbol

Date: 16 MAR 06
File: E-56-14-19
Rev.

Designed by: LAM
Drawn by: BAZE
Checked by: MASTEN

U.S.ARMY ENGINEER DISTRICT, SEATTLE
CORPS OF ENGINEERS
SEATTLE, WASHINGTON
Prepared by:

ADDITIONAL WATER STORAGE PROJECT
HOWARD HANSON DAM

PANEL SCHEDULE 4

GREEN RIVER WASHINGTON

Plate number: E-605
Sheet of

FILE: I:\AECDESIGNS\HHAW\Electrical\HHAWE-605PS4.DGN
DESIGN FILE:
DATE AND TIME PLOTTED: 07-AUG-2008 12:35

PANEL MS1
225 AMP MAIN BREAKER FRAME W/ 225 A TRIP, SURFACE MOUNT
480/277 VOLTS, 3 PHASE, 4 WIRE

CKT. NO.	NO. POLES	CKT. COND	TRIP AMP.	GROUND	CONDUIT	LOAD SERVED	CONNECTED LOAD - V.A			CONNECTED LOAD - V.A.			LOAD SERVED	CONDUIT	GROUND	TRIP AMP.	CKT. COND	NO. POLES	CKT. NO.
							A	B	C	A	B	C							
1						TRUCK FILL PUMP	1036			3718			FLUME WETTING WATER PUMP						2
3								1036			3718								4
5									1036			3718							6
7						LIFT HOPPER LIFT HOIST	64016			2018			LIFT HOPPER CLOSURE HOIST						8
9								64016			2018								10
11									64016			2018							12
13						T3 STEP DOWN TRANSFORMER	5000						SPARE						14
15								5000					SPARE						16
17									5000				SPARE						18
19													SPARE						20
21																			22
23																			24
25																			26
27																			28
29																			30
31																			32
33																			34
35																			36
37																			38
39																			40
41																			42
						TOTAL CONNECTED LOAD	227.36	(KVA)	70%	DEMAND		159.15	DEMAND LOAD (KVA)						

PANEL MS2
100 AMP MAIN BREAKER FRAME W/ 60 A TRIP, SURFACE MOUNT
208/120 VOLTS, 3 PHASE, 4 WIRE

CKT. NO.	NO. POLES	CKT. COND	TRIP AMP.	GROUND	CONDUIT	LOAD SERVED	CONNECTED LOAD - V.A			CONNECTED LOAD - V.A.			LOAD SERVED	CONDUIT	GROUND	TRIP AMP.	CKT. COND	NO. POLES	CKT. NO.
							A	B	C	A	B	C							
1						HOLDING TANK CROWDER LEAFT HOIST	794			564			HOLDING TANK CROWDER TROLLEY						2
3								794			564								4
5						HOLDING TANK CROWDER LEAFT HOIST			794			564	HOLDING TANK CROWDER TROLLEY						6
7							794			564									8
9						HOLDING TANK CROWDER LEAFT HOIST		794			564		HOLDING TANK CROWDER TROLLEY						10
11									794			564							12
13						HOLDING TANK CROWDER LEAFT HOIST	794			564			HOLDING TANK CROWDER TROLLEY						14
15								794			564								16
17						HOLDING TANK CROWDER LEAFT HOIST			794			564	HOLDING TANK CROWDER TROLLEY						18
19							794			564									20
21						TRUCK TRANS DOCKING STATION TROLLEY		564					SPARE						22
23									564				SPARE						24
25													SPARE						26
27													SPARE						28
29																			30
31																			32
33																			34
35																			36
37																			38
39																			40
41																			42
						TOTAL CONNECTED LOAD	14.708	(KVA)	1	DEMAND		14.708	DEMAND LOAD (KVA)						

NOTES:

1. FOR QUANTITY AND SIZE OF CONDUIT AND CONDUCTORS FEEDING PANELS, REFER TO POWER ONE-LINE DIAGRAM, PLATE E-601.

2. ALL PANELBOARDS SHALL HAVE SEPARATE NEUTRAL AND GROUND BUS.

3. ALL RECEPTACLE CIRCUITS SHALL HAVE SEPARATE NEUTRAL CONDUCTORS.

US Army Corps of Engineers
Seattle District

Symbol	Description	Date	Appr.	Symbol	Description
		/ /			

Date: 16 MAR 06
File: E-56-14-19
Rev.

Designed by: LAM
Drawn by: BAZE
Checked by: MASTEN

U.S.ARMY ENGINEER DISTRICT SEATTLE
CORPS OF ENGINEERS
SEATTLE, WASHINGTON
Prepared by:

ADDITIONAL WATER STORAGE PROJECT
HOWARD HANSON DAM

PANEL SCHEDULE 5

GREEN RIVER WASHINGTON

Plate number:
E-606
Sheet of

DESIGN FILE: I:\AECDESIGNS\HHAW\Electrical\HHAWE_606PS5.DGN
DATE AND TIME PLOTTED: 07-AUG-2008 12:36

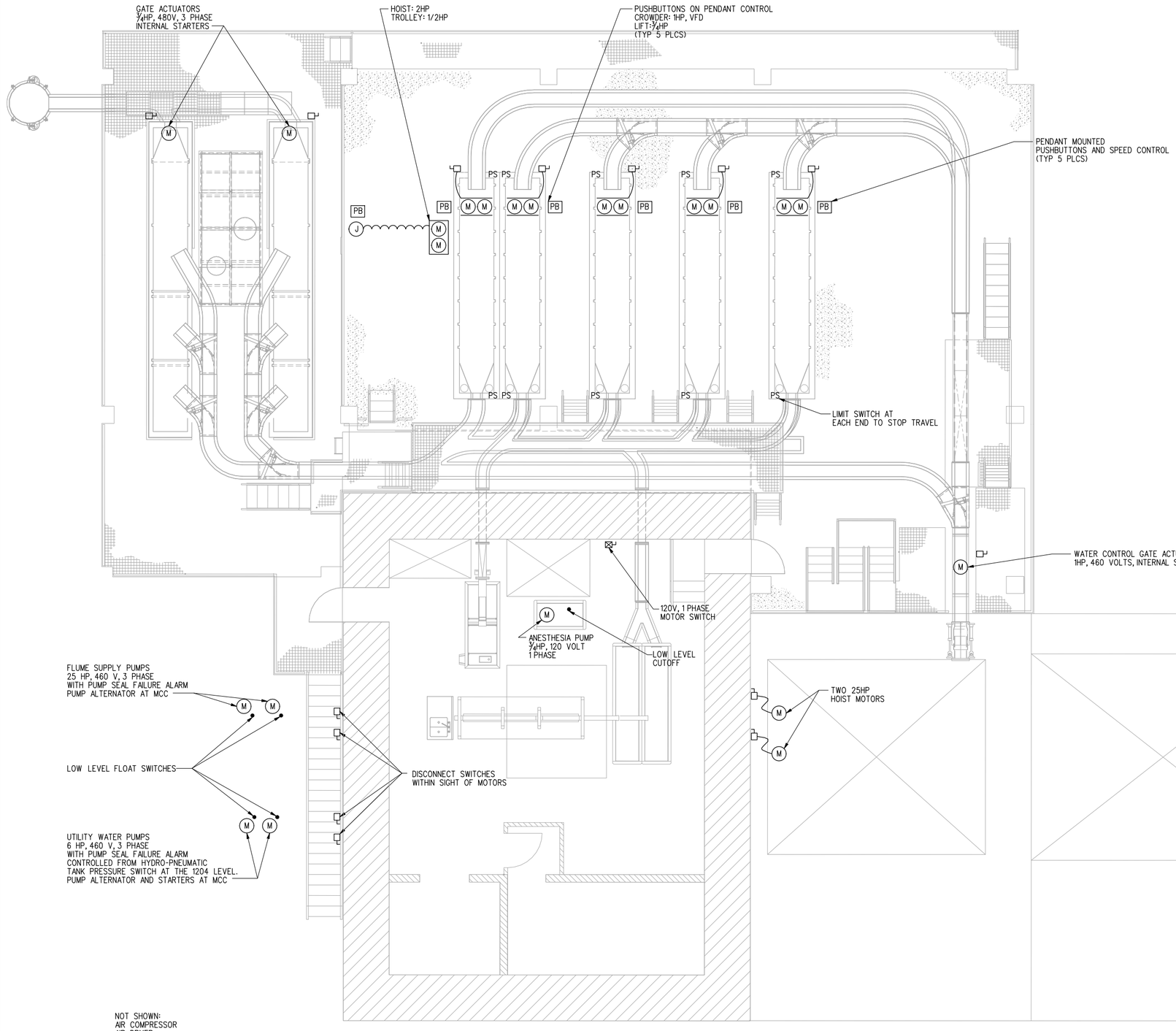

NOT SHOWN:
AIR COMPRESSOR
AIR DRYER
AUTOMATIC DRAIN ON AIR RECEIVER
HEAT TRACE ON ALL PIPING TO PREVENT FREEZING - SEE SHEET MF19, MF20, MF21

PRELIMINARY
95% SUBMITTAL

US Army Corps of Engineers
Seattle District

Symbol	Description	Appr.	Date
			/ /

Designed by:
Drawn by: Autoscan, Inc.
Checked by:
Date: 16 JUN 08
File • E-56-14-19
Rev.

U.S.ARMY ENGINEER DISTRICT,SEATTLE
CORPS OF ENGINEERS
SEATTLE, WASHINGTON
Prepared by: HDR | FISHPRO

ADDITIONAL WATER STORAGE PROJECT
HOWARD HANSON DAM
MONITORING FACILITY POWER PLAN
GREEN RIVER WASHINGTON

Plate number:
EF1
Sheet of

DATE AND TIME PLOTTED: 8/6/2008 3:02:37 PM DESIGN FILE: I:\AECDESIGNS\HHAM\OTHER\HDRINC\2008061\S\HHSM-EF01.DGN

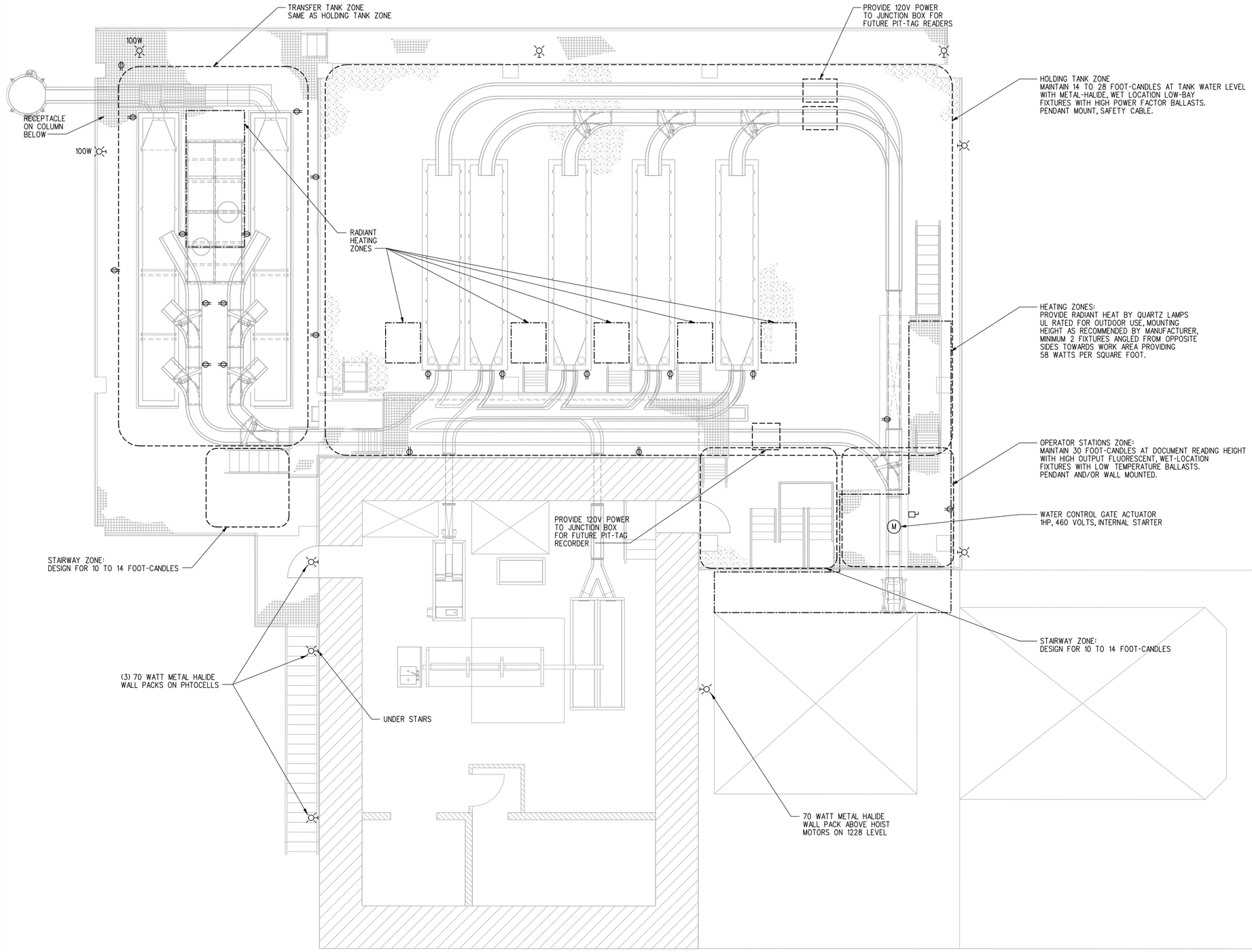

NOTES:
1. COORDINATE SWITCH LOCATIONS WITH USACE.

2. INDIVIDUAL SWITCHES FOR EACH RADIANT HEATER.

PRELIMINARY
95% SUBMITTAL

US Army Corps of Engineers
Seattle District

Symbol	Description	Date	Appr.	Symbol	Description
		/ /			

Designed by:
Drawn by: Autoscan, Inc.
Checked by:
Date: 16 JUN 08
File • E-56-14-19
Rev.

U.S.ARMY ENGINEER DISTRICT,SEATTLE
CORPS OF ENGINEERS
SEATTLE, WASHINGTON
Prepared by: HDR | FISHPRO

ADDITIONAL WATER STORAGE PROJECT
HOWARD HANSON DAM
GREEN RIVER WASHINGTON

MONITORING FACILITY LIGHTING ZONES AND RECEPTACLE PLAN

Plate number:
EF2
Sheet of

DATE AND TIME PLOTTED: 8/6/2008 3:02:46 PM DESIGN FILE: I:\AECDESIGNS\HHAM\OTHER\HDRINC\2008061\VHHSM-EF02.DGN

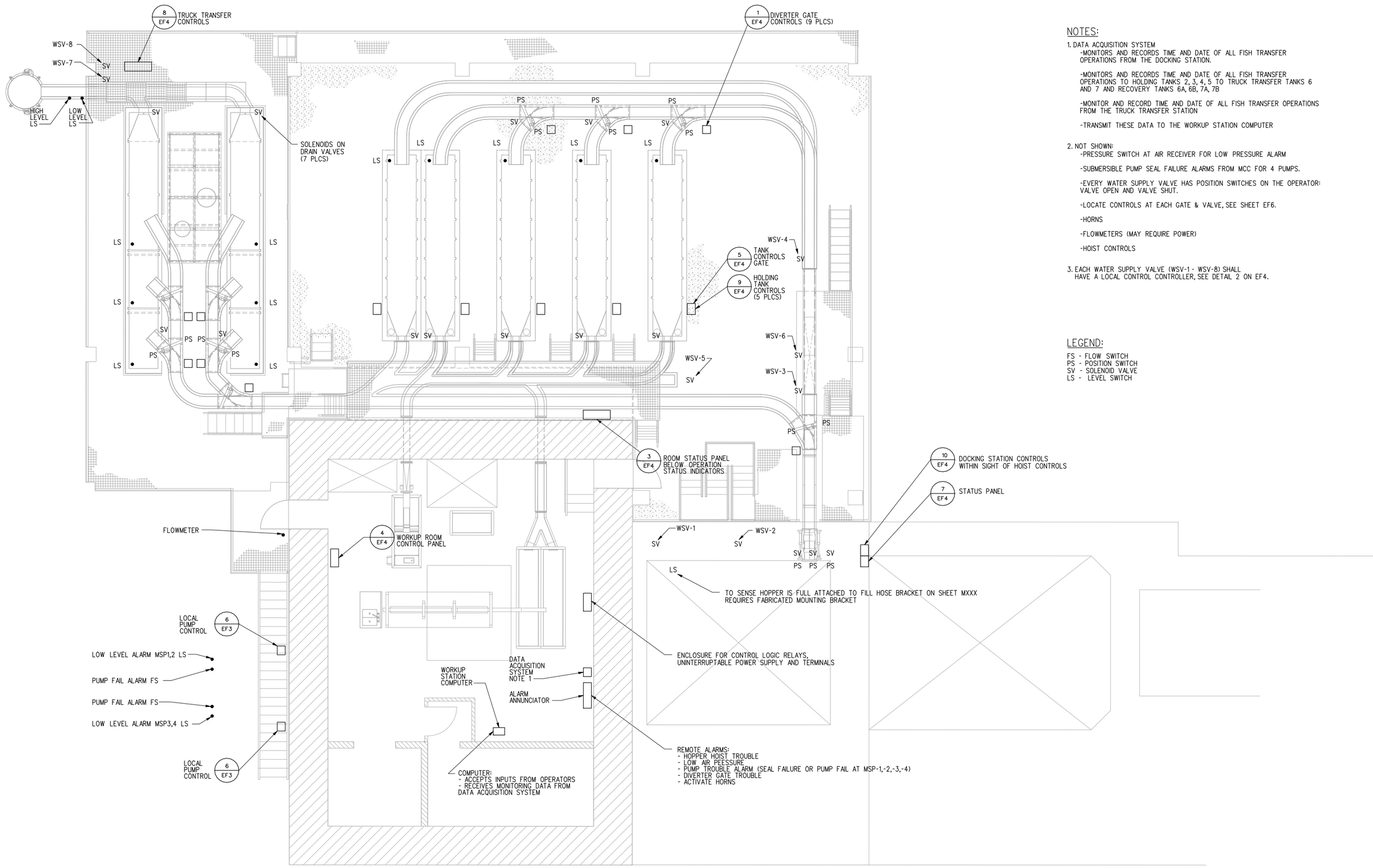

NOTES:

1. DATA ACQUISITION SYSTEM
   -MONITORS AND RECORDS TIME AND DATE OF ALL FISH TRANSFER OPERATIONS FROM THE DOCKING STATION.

   -MONITORS AND RECORDS TIME AND DATE OF ALL FISH TRANSFER OPERATIONS TO HOLDING TANKS 2, 3, 4, 5 TO TRUCK TRANSFER TANKS 6 AND 7 AND RECOVERY TANKS 6A, 6B, 7A, 7B

   -MONITOR AND RECORD TIME AND DATE OF ALL FISH TRANSFER OPERATIONS FROM THE TRUCK TRANSFER STATION

   -TRANSMIT THESE DATA TO THE WORKUP STATION COMPUTER

2. NOT SHOWN:
   -PRESSURE SWITCH AT AIR RECEIVER FOR LOW PRESSURE ALARM

   -SUBMERSIBLE PUMP SEAL FAILURE ALARMS FROM MCC FOR 4 PUMPS.

   -EVERY WATER SUPPLY VALVE HAS POSITION SWITCHES ON THE OPERATOR: VALVE OPEN AND VALVE SHUT.

   -LOCATE CONTROLS AT EACH GATE & VALVE, SEE SHEET EF6.

   -HORNS

   -FLOWMETERS (MAY REQUIRE POWER)

   -HOIST CONTROLS

3. EACH WATER SUPPLY VALVE (WSV-1 - WSV-8) SHALL HAVE A LOCAL CONTROL CONTROLLER, SEE DETAIL 2 ON EF4.

LEGEND:

FS - FLOW SWITCH
PS - POSITION SWITCH
SV - SOLENOID VALVE
LS - LEVEL SWITCH

PRELIMINARY
95% SUBMITTAL

US Army Corps of Engineers
Seattle District

Symbol	Description	Appr.	Date
			/ /

Designed by:
Drawn by: Autoscan, Inc.
Checked by:
Date: 16 JUN 08
File # E-56-14-19
Rev.

U.S.ARMY ENGINEER DISTRICT,SEATTLE
CORPS OF ENGINEERS
SEATTLE, WASHINGTON
Prepared by: HDR | FISHPRO

ADDITIONAL WATER STORAGE PROJECT
HOWARD HANSON DAM
MONITORING FACILITY
INSTRUMENTATION PLAN
GREEN RIVER WASHINGTON

Plate number:
EF3
Sheet of

DATE AND TIME PLOTTED: 8/6/2008 3:02:56 PM DESIGN FILE: I:\AECDESIGNS\HHAM\OTHER\HDRINC\2008061\VHHSM-EF03.DGN

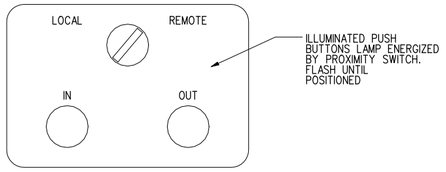

ILLUMINATED PUSH BUTTONS LAMP ENERGIZED BY PROXIMITY SWITCH. FLASH UNTIL POSITIONED

DIVERTER GATE CONTROL

9 PLACES

1 EF3

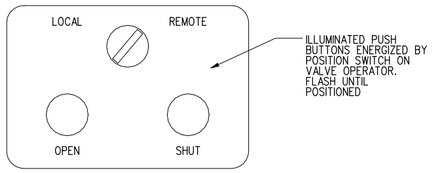

ILLUMINATED PUSH BUTTONS ENERGIZED BY POSITION SWITCH ON VALVE OPERATOR. FLASH UNTIL POSITIONED

WATER SUPPLY VALVE CONTROL

4 PLACES

2 EF3

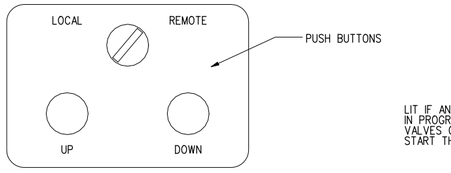

PUSH BUTTONS

TANK GATE CONTROL

7 PLACES

5 EF3

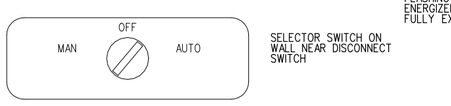

SELECTOR SWITCH ON WALL NEAR DISCONNECT SWITCH

PUMP CONTROL

2 PLACES

6 EF3

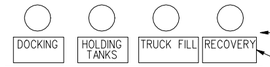

RED LED INDICATORS MIN 3" DIAMETER HIGH ON WALL. EDWARDS 104SLED OR EQUIV.

LEGEND PLATES WITH 1" TALL LETTERING

PUMPS RUNNING
- MSP-1
- MSP-2

VALVES OPEN
- WSV-1
- WSV-3
- WSV-4
- WSV-5
- WSV-6
- WSV-7

DIVERTER GATES

HOLD	TRUCK
5	4, 3, 2
4	3, 2
3	2
7, 7A, 7B	6, 6A, 6B
7A	7B, 7
7B	7
6A	6B, 6
6B	6

INDICTATIONS ONLY, NO CONTROL CAPABILITY. INDICATORS FLASH IF SOLENOID IS ENERGIZED AND VALVE IS NOT YET POSITIONED.

ROOM STATUS PANEL

3 EF4

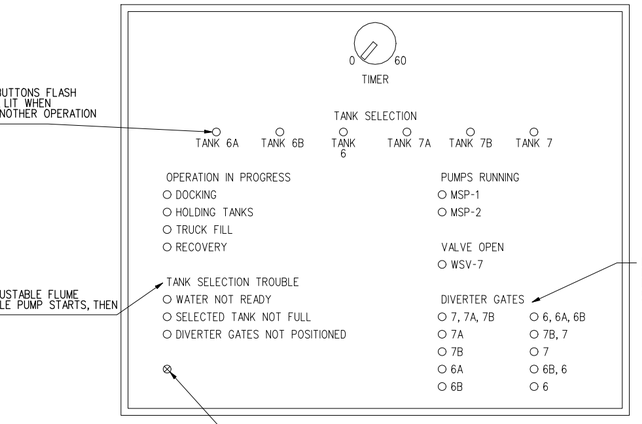

ILLUMINATED PUSH BUTTONS FLASH WHILE IN PROGRESS, LIT WHEN SELECTED, OUT IF ANOTHER OPERATION IS IN PROGRESS

FLASHES FOR ADJUSTABLE FLUME WETTING TIME WHILE PUMP STARTS, THEN OUT OR LIT

INDICATORS FLASH IF SOLENOID IS ENERGIZED BUT GATE IS NOT YET POSITIONED

BUZZER SOUNDS WHILE TANK SELECTION PUSH BUTTON IS PUSHED AND (1) ANOTHER OPERATION IS IN PROGRESS (2) TANK SELECTED IS NOT FULL (3) DIVERTER GATES NOT POSITIONED AFTER 2 SECONDS (4) PUMP NOT RUNNING OR WSV-5 NOT OPEN AFTER 2 SECONDS. BUZZER SOUNDS FOR 10 SECONDS WHEN TIMER EXPIRES. BUZZER SOUNDS WHEN TANK LEVEL GOES LOW IN SELECTED TANK.

WORKUP ROOM CONTROLS PANEL

4 EF3

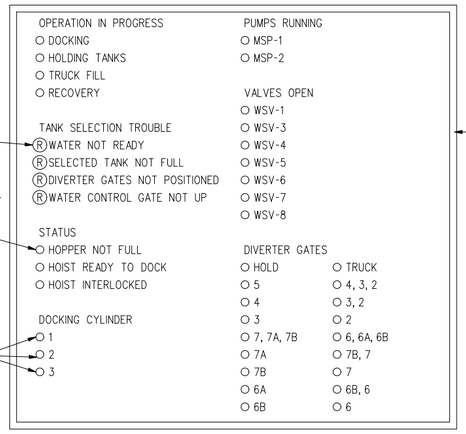

LIT IF ANOTHER OPERATION IN PROGRESS, FLASHES WHILE VALVES OPEN AND PUMPS START THEN OUT OR LIT

OUT UNTIL FILL BUTTON PUSHED FLASHES WHILE FILLING THEN OUT WHEN FULL

FLASHING IF SOLENOID ENERGIZED UNTIL FULLY EXTENDED, THEN LIT

INDICTATIONS ONLY, NO CONTROL CAPABILITY

DOCKING STATION STATUS PANEL

7 EF4

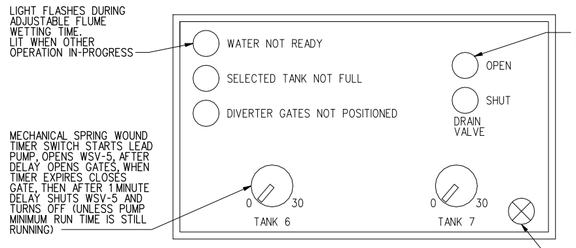

LIGHT FLASHES DURING ADJUSTABLE FLUME WETTING TIME. LIT WHEN OTHER OPERATION IN-PROGRESS

ILLUMINATED PUSH BUTTON LIT WHEN SOLENOID IS ENERGIZED

MECHANICAL SPRING WOUND TIMER SWITCH STARTS LEAD PUMP, OPENS WSV-5, AFTER DELAY OPENS GATES, WHEN TIMER EXPIRES CLOSES GATE, THEN AFTER 1 MINUTE DELAY SHUTS WSV-5 AND TURNS OFF (UNLESS PUMP MINIMUM RUN TIME IS STILL RUNNING)

SINCE GATE WILL NOT OPEN UNTIL ALL CONDITIONS QUALIFY, THEREFORE ONLY ONE TANK CAN BE SELECTED AT A TIME

BUZZER SOUNDS IF SELECTED TANK GOES LOW DURING TRANSFER

HOLDING TANK CONTROLS

5 PLACES

9 EF3

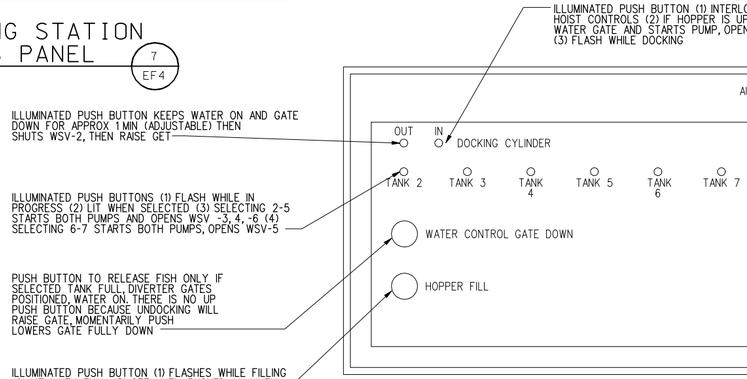

ILLUMINATED PUSH BUTTON (1) INTERLOCKS OUT HOIST CONTROLS (2) IF HOPPER IS UP RAISES WATER GATE AND STARTS PUMP, OPENS WSV-2 (3) FLASH WHILE DOCKING

PUSH BUTTON INACTIVE UNTIL HOIST READY STATUS, FLASH UNTIL POSITIONED, OUT OTHERWISE

ILLUMINATED PUSH BUTTON KEEPS WATER ON AND GATE DOWN FOR APPROX 1 MIN (ADJUSTABLE) THEN SHUTS WSV-2, THEN RAISE GET

ILLUMINATED PUSH BUTTONS (1) FLASH WHILE IN PROGRESS (2) LIT WHEN SELECTED (3) SELECTING 2-5 STARTS BOTH PUMPS AND OPENS WSV -3, 4, -6 (4) SELECTING 6-7 STARTS BOTH PUMPS, OPENS WSV-5

PUSH BUTTON TO RELEASE FISH ONLY IF SELECTED TANK FULL, DIVERTER GATES POSITIONED, WATER ON. THERE IS NO UP PUSH BUTTON BECAUSE UNDOCKING WILL RAISE GATE, MOMENTARILY PUSH LOWERS GATE FULLY DOWN

ILLUMINATED PUSH BUTTON (1) FLASHES WHILE FILLING (2) LIT WHEN FULL (3) OFF UNTIL PUSHED (4) WHEN FULL, ALLOWS HOIST IF UNDOCKED

NO CAPACITY TO OVERRIDE HOIST LOCKOUT. GATE PUSHBUTTONS MOVE GATE ONLY WHILE PUSHED.

AUTOMODE BUZZER SOUNDS WHILE ANY BUTTON IS PUSHED AND (1) ANOTHER OPERATION IS IN PROGRESS (2) TANK SELECTED IS NOT FULL (3) PUMP IS NOT ON OR VALVE NOT OPEN AFTER 2 SECONDS (4) DIVERTER GATES NOT POSITIONED (5) ATTEMPT TO DOCK AND HOIST NOT READY MANUAL MODE BUZZER SOUNDS IF ATTEMPT TO DOCK FAILS. AUTOMODE BUZZER ANY TIME SELECTED TANK GOES LOW.

NOTES:
1. NO OPERATOR ADJUSTABLE TIMERS ON FRONT OF PANEL
2. HOIST CONTROLS NOT SHOWN
3. LOCATED NEAR DOCKING STATION STATUS PANEL
4. IN MANUAL, THERE IS NO CAPABILITY TO START THE PUMPS HERE.
5. IN MANUAL, HOIST IS ALWAYS ALLOWED IF UNDOCKED, EVEN WHEN EMPTY.

DOCKING STATION CONTROLS

10 EF3

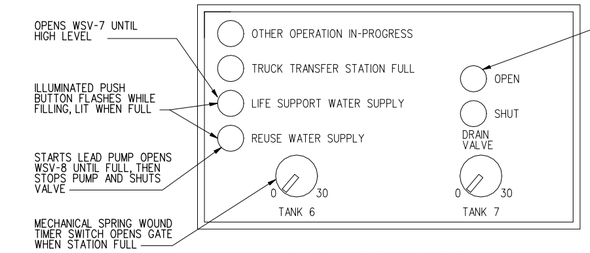

OPENS WSV-7 UNTIL HIGH LEVEL

ILLUMINATED PUSH BUTTON FLASHES WHILE FILLING, LIT WHEN FULL

STARTS LEAD PUMP OPENS WSV-8 UNTIL FULL, THEN STOPS PUMP AND SHUTS VALVE

MECHANICAL SPRING WOUND TIMER SWITCH OPENS GATE WHEN STATION FULL

ILLUMINATED PUSH BUTTON LIT WHEN SOLENOID IS ENERGIZED

TRUCK TRANSFER CONTROLS

8 EF3

PRELIMINARY 95% SUBMITTAL

US Army Corps of Engineers
Seattle District

Symbol	Description	Appr.	Date
			/ /

Designed by:
Drawn by: Autoscan, Inc.
Checked by:
Date: 16 JUN 08
File #: E-56-14-19
Rev.

U.S.ARMY ENGINEER DISTRICT,SEATTLE
CORPS OF ENGINEERS
SEATTLE, WASHINGTON
Prepared by: HDR | FISHPRO

ADDITIONAL WATER STORAGE PROJECT
HOWARD HANSON DAM
GREEN RIVER WASHINGTON

MONITORING FACILITY ELECTRICAL DETAILS 1

Plate number: EF4
Sheet of

DATE AND TIME PLOTTED: 8/6/2008 3:03:00 PM DESIGN FILE: I:\ACCDESIGNS\HHAM\OTHER\HDRINC\2008061\S\HHSM-EF04.DGN

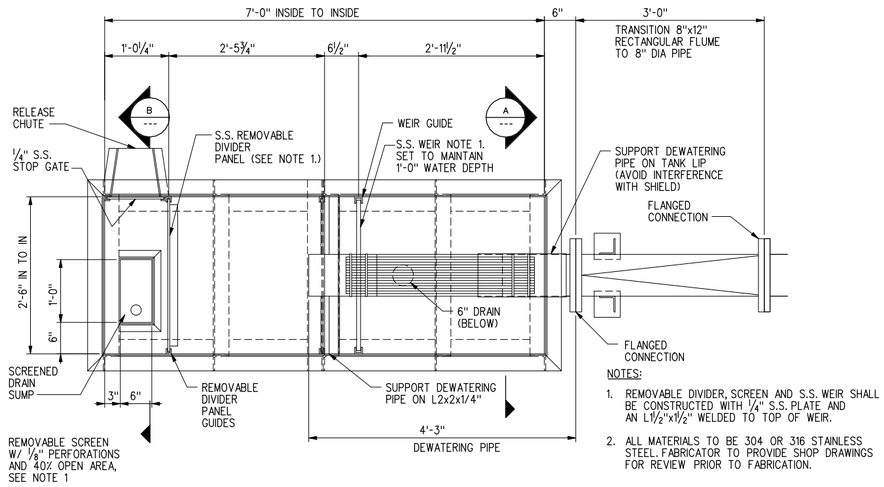

NOTES:

1. REMOVABLE DIVIDER, SCREEN AND S.S. WEIR SHALL BE CONSTRUCTED WITH ¼" S.S. PLATE AND AN L1½"x1½" WELDED TO TOP OF WEIR.
2. ALL MATERIALS TO BE 304 OR 316 STAINLESS STEEL. FABRICATOR TO PROVIDE SHOP DRAWINGS FOR REVIEW PRIOR TO FABRICATION.

TRANSFER/ ANESTHESIA TANK PLAN (1 SF3)

1" = 1'-0" 12"9" 6" 3" 0 1' 2'

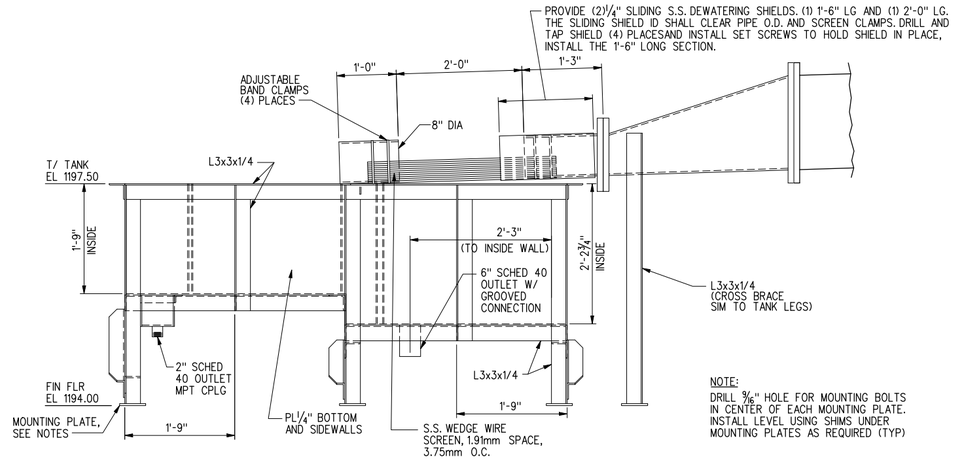

NOTE:
DRILL ⅜" HOLE FOR MOUNTING BOLTS IN CENTER OF EACH MOUNTING PLATE. INSTALL LEVEL USING SHIMS UNDER MOUNTING PLATES AS REQUIRED (TYP)

TRANSFER/ ANESTHESIA TANK ELEVATION

1" = 1'-0" 12"9" 6" 3" 0 1' 2'

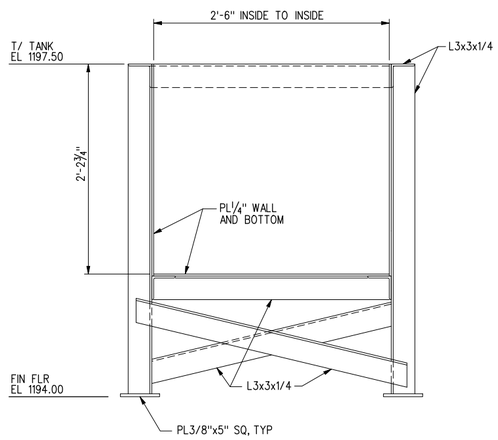

SECTION (A)

1½" = 1'-0" 12" 9" 6" 3" 0 1'

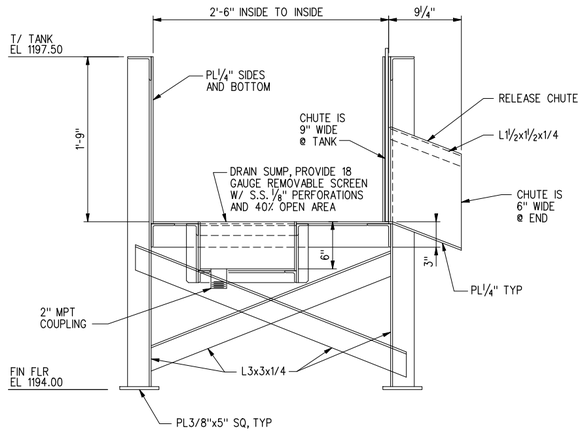

SECTION (B)

1½" = 1'-0" 12" 9" 6" 3" 0 1'

PRELIMINARY
95% SUBMITTAL

US Army Corps of Engineers
Seattle District

Symbol	Description	Appr.	Date
			/ /

Designed by: LP
Drawn by: Autoscan, Inc.
Checked by: LC
Date: 16 JUN 08
File • E-56-14-19
Rev.

U.S. ARMY ENGINEER DISTRICT, SEATTLE
CORPS OF ENGINEERS
SEATTLE, WASHINGTON
Prepared by: HDR | FISHPRO

ADDITIONAL WATER STORAGE PROJECT
HOWARD HANSON DAM
GREEN RIVER WASHINGTON

TRANSFER/ ANESTHESIA TANK PLAN AND SECTIONS

Plate number: MF1
Sheet of

DATE AND TIME PLOTTED: 8/6/2008 3:03:09 PM DESIGN FILE: I:\AECDESIGNS\HHAW\OTHER\HDRINC\2008061\S\HHSM-MF01.DGN

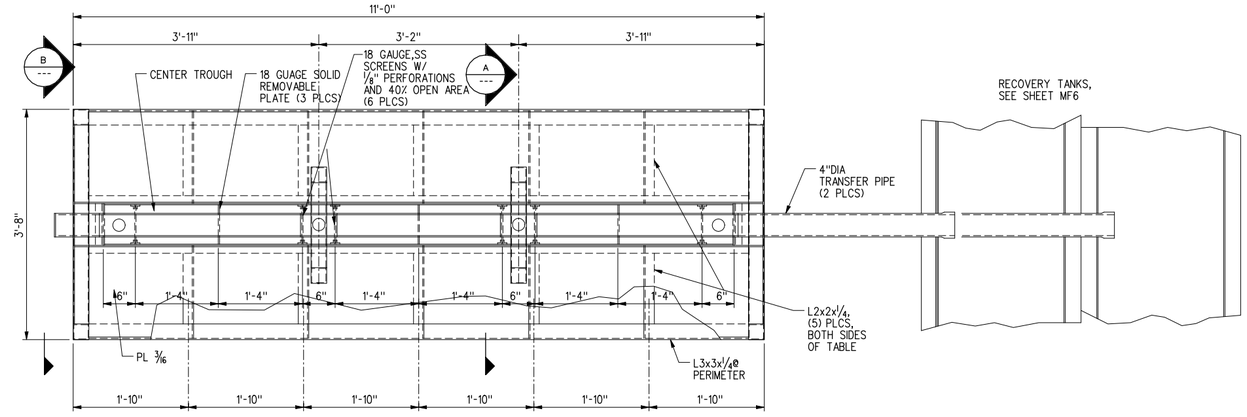

WORKUP TABLE PLAN (1 / SF3)

1" = 1'-0" 12"9" 6" 3" 0 1' 2'

NOTES:

1. ALL MATERIALS TO BE 304 OR 316 STAINLESS STEEL. FABRICATOR TO PROVIDE SHOP DRAWINGS FOR REVIEW PRIOR TO TABLE TO BE FABRICATION.
2. FABRICATE TABLE IN SECTIONS TO ALLOW EACH COMPONENT TO FIT THROUGH THE ACCESS DOORS TO THE SPACE.

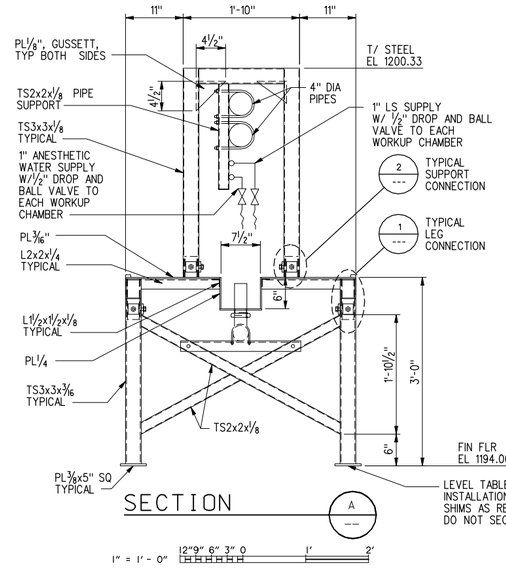

SECTION (A)

1" = 1'-0" 12"9" 6" 3" 0 1' 2'

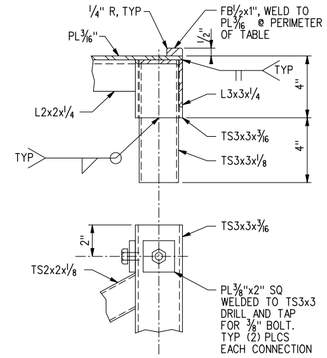

DETAIL (1)

3" = 1'-0" 1" 0 3" 6" 9" 12"

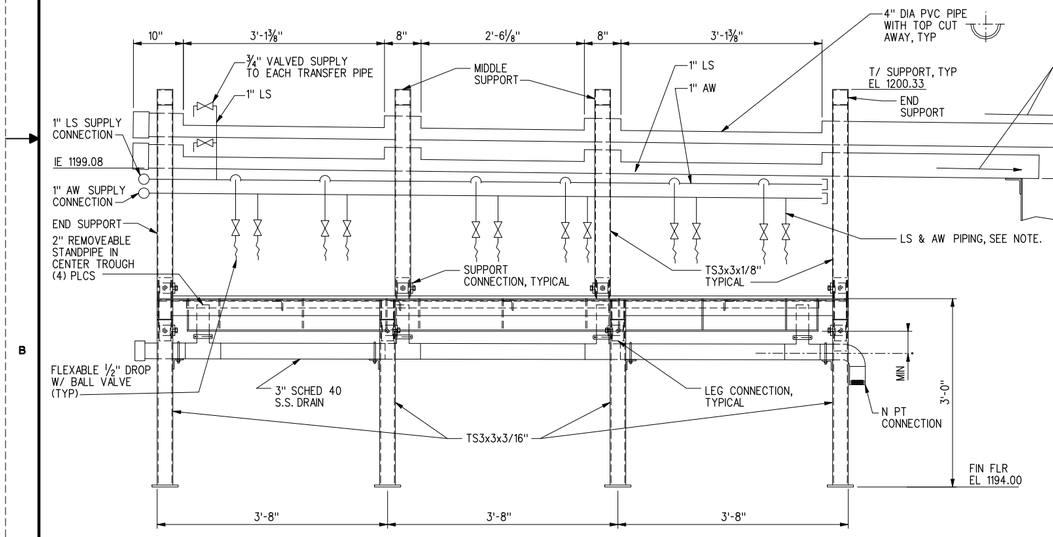

WORKUP TABLE ELEVATION

1" = 1'-0" 12"9" 6" 3" 0 1' 2'

NOTES:

LS AND AW PIPING TO BE SCHED 40 S.S. PIPE UPSTREAM OF SUPPLY VALVES. VALVES SHALL BE S.S. BALL VALVE. SUPPORT ALL PIPING OFF TABLE STRUCTURAL SUPPORTS AS NEEDED.

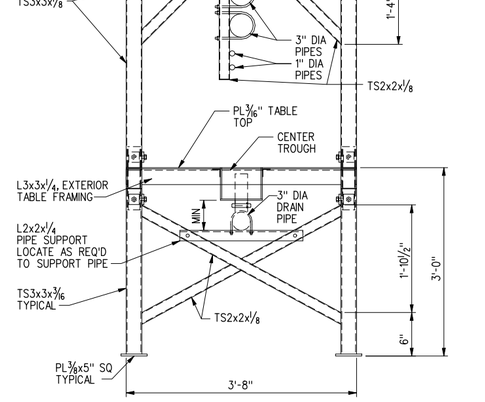

SECTION (B)

1" = 1'-0" 12"9" 6" 3" 0 1' 2'

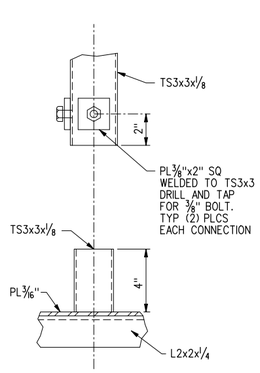

DETAIL (2)

3" = 1'-0" 1" 0 3" 6" 9" 12"

PRELIMINARY 95% SUBMITTAL

US Army Corps of Engineers
Seattle District

Symbol	Description	Appr.	Date
			/ /

Date: 16 JUN 08
File #: E-56-14-19
Rev.
Designed by: LP
Drawn by: Autoscon, Inc.
Checked by: LC

U.S.ARMY ENGINEER DISTRICT SEATTLE
CORPS OF ENGINEERS
SEATTLE, WASHINGTON
Prepared by: HDR | FISHPRO

ADDITIONAL WATER STORAGE PROJECT
HOWARD HANSON DAM
GREEN RIVER WASHINGTON

WORKUP TABLE PLAN, SECTIONS AND DETAILS

Plate number: MF 2
Sheet of

DATE AND TIME PLOTTED: 8/6/2008 3:03:11 PM DESIGN FILE: I:\AECDESIGNS\HHAW\OTHER\HDRINC\2008061F\VHHSM-MF02.DGN

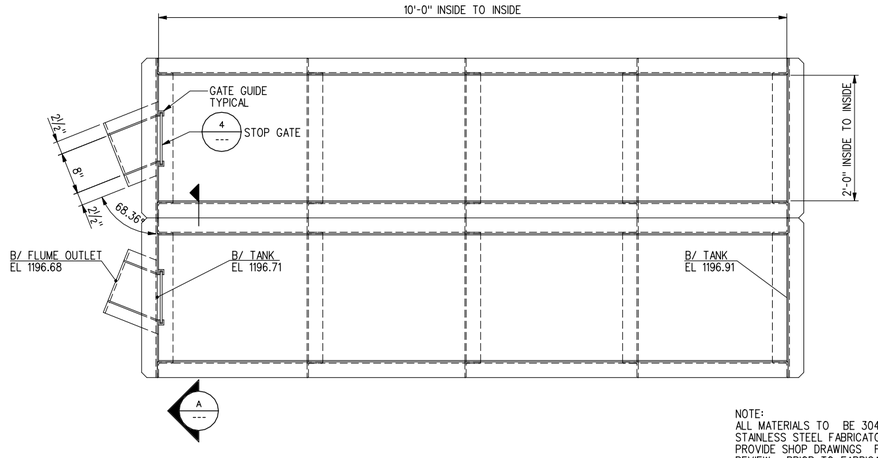

NOTE:
ALL MATERIALS TO BE 304 OR 316 STAINLESS STEEL FABRICATOR TO PROVIDE SHOP DRAWINGS FOR REVIEW PRIOR TO FABRICATION.

RECOVERY TANK PLAN (1 / SF3)

(2) REQUIRED, (1) OPP HAND

1" = 1'-0" 12"9" 6" 3" 0 1' 2'

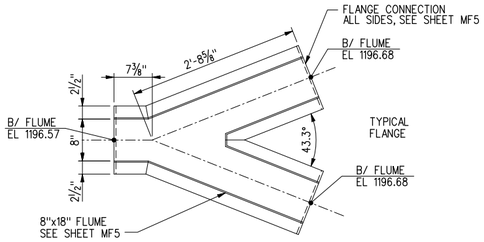

NOTE:
ALL MATERIALS TO BE 304 OR 316 STAINLESS STEEL FABRICATOR TO PROVIDE SHOP DRAWINGS FOR REVIEW PRIOR TO FABRICATION.

OUTLET FLUME (2)

1" = 1'-0" 12"9" 6" 3" 0 1' 2'

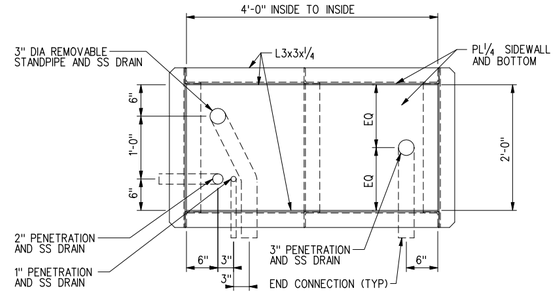

NOTE:
ALL MATERIALS TO BE 304 OR 316 STAINLESS STEEL FABRICATOR TO PROVIDE SHOP DRAWINGS FOR REVIEW PRIOR TO FABRICATION.

ANESTHETIC CIRCULATION TANK PLAN (3 / SF3)

1" = 1'-0" 12"9" 6" 3" 0 1' 2'

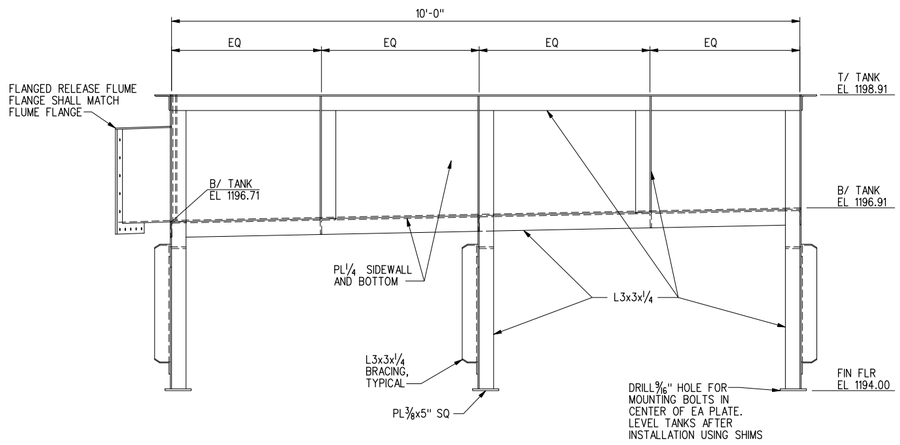

RECOVERY TANK ELEVATION

1" = 1'-0" 12"9" 6" 3" 0 1' 2'

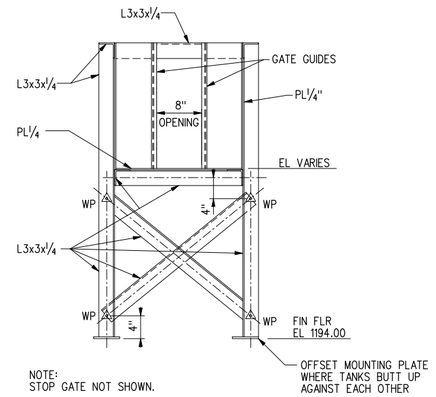

NOTE:
STOP GATE NOT SHOWN.

SECTION (A)

1" = 1'-0" 12"9" 6" 3" 0 1' 2'

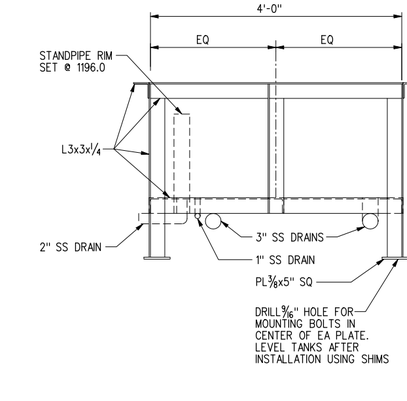

ANESTHETIC CIRCULATION TANK ELEVATION

1" = 1'-0" 12"9" 6" 3" 0 1' 2'

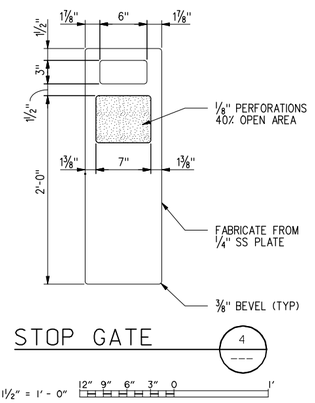

STOP GATE (4)

1½" = 1'-0" 12" 9" 6" 3" 0 1'

PRELIMINARY
95% SUBMITTAL

US Army Corps of Engineers
Seattle District

Symbol	Description	Date	Appr.
		/ /	

Date: 16 JUN 08
File #: E-56-14-19
Rev.:
Designed by: LP
Drawn by: Autoscan, Inc.
Checked by: LC

U.S.ARMY ENGINEER DISTRICT,SEATTLE
CORPS OF ENGINEERS
SEATTLE, WASHINGTON
Prepared by: HDR | FISHPRO

ADDITIONAL WATER STORAGE PROJECT
HOWARD HANSON DAM
GREEN RIVER WASHINGTON

RECOVERY TANK AND DEWATERING TANK, PLAN AND SECTIONS

Plate number: MF 3
Sheet of

FILE: I:\ACCDESIGNS\WHAA\OTHER\HDRINC\2008061F\WHSM-MF03.DGN
DATE AND TIME PLOTTED: 8/6/2008 3:03:20 PM DESIGN FILE: I:

NOTES:

1. ALL MATERIALS TO BE 304 OR 316 STAINLESS STEEL.
2. FLUMES TO BE FABRICATED IN SECTIONS AS INDICATED ON SHEET MF5.
3. EXTEND FLUME TO MOUNT TO WATER CONTROL BOX 1.
4. DIVERTER GATE SECTIONS SHALL BE FABRICATED AS STAND ALONE SECTIONS CONFORMING TO SHEET MF6.
5. FABRICATOR TO PROVIDE SHOP DRAWINGS FOR REVIEW PRIOR TO FABRICATION.

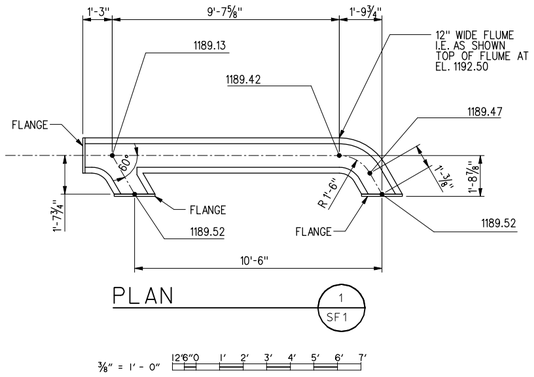

PLAN 1 SF 1

⅜" = 1'-0" 12"0 1' 2' 3' 4' 5' 6' 7'

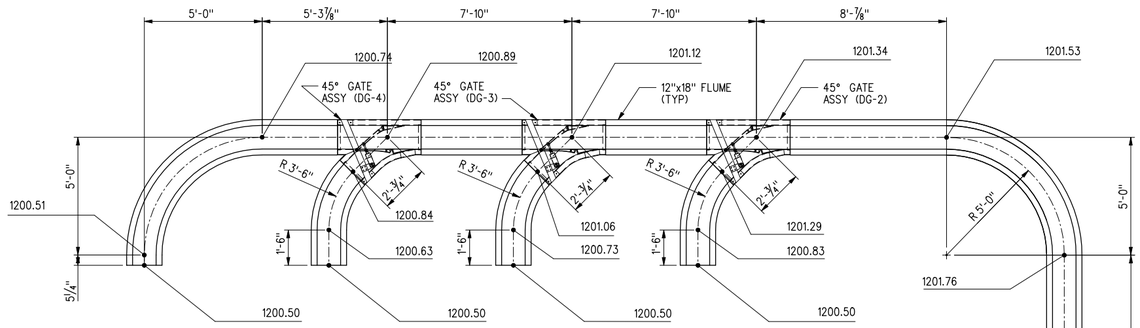

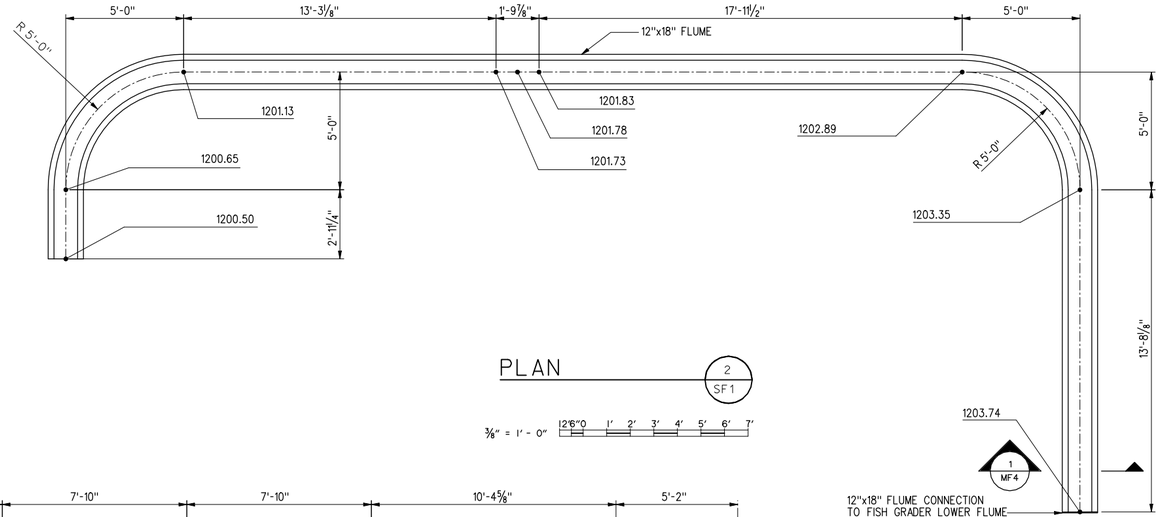

PLAN 2 SF 1

⅜" = 1'-0" 12"0 1' 2' 3' 4' 5' 6' 7'

PLAN 3 SF 1

⅜" = 1'-0" 12"0 1' 2' 3' 4' 5' 6' 7'

PRELIMINARY 95% SUBMITTAL

US Army Corps of Engineers
Seattle District

Symbol	Description	Appr.	Date
			/ /

Date: 16 JUN 08
File • E-56-14-19
Rev.
Designed by:
Drawn by: Autoscon, Inc.
Checked by:
Prepared by: FISHPRO

U.S.ARMY ENGINEER DISTRICT,SEATTLE CORPS OF ENGINEERS SEATTLE, WASHINGTON

ADDITIONAL WATER STORAGE PROJECT HOWARD HANSON DAM
FLUME PLANS
GREEN RIVER WASHINGTON

Plate number: MF 4
Sheet of

DATE AND TIME PLOTTED: 8/6/2008 3:03:23 PM DESIGN FILE: I:\AECDESIGNS\HHAW\OTHER\HDRINC\2008061\SHSM-MF04.DGN

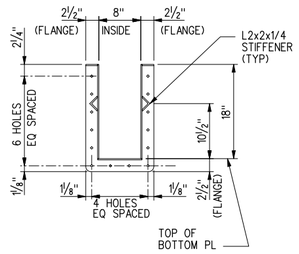

8" FLUME

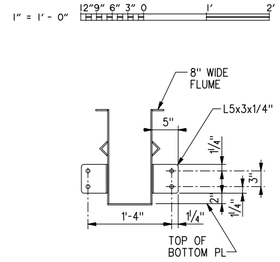

FLUME SUPPORT CONNECTION

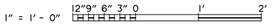

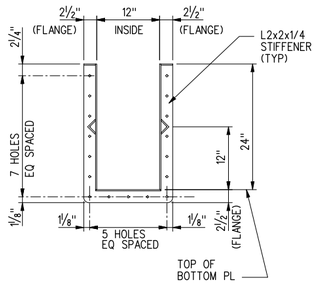

12"x24" FLUME

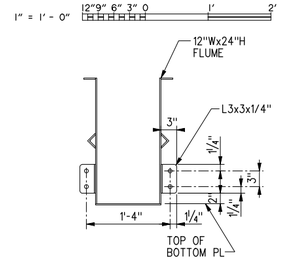

FLUME SUPPORT CONNECTION

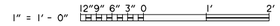

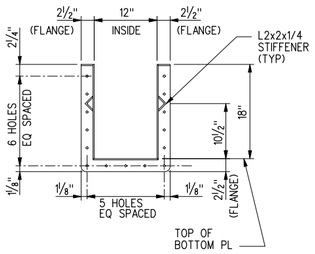

12"x18" FLUME

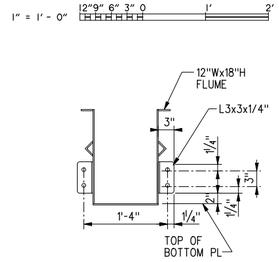

FLUME SUPPORT CONNECTION

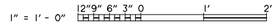

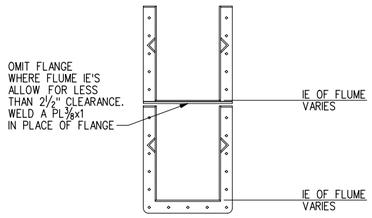

FLUME SECTION @ EXIT OF GRADER (1 / MF 4)

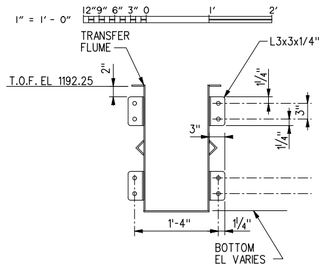

TRANSFER FLUME SUPPORT CONNECTION

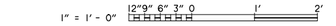

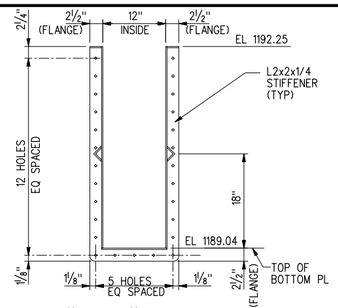

12"x24" FLUME

NOTES:

1. ALL FLUMES SHALL BE WELDED CONSTRUCTION UNLESS NOTED OR SHOWN OTHERWISE.
2. ALL FLUMES SHALL BE CONSTRUCTED WITH TYPE 304 OR 316 STAINLESS STEEL.
3. LOCATE FLANGES AS REQUIRED TO KEEP WEIGHT OF FLUME SECTION TO 850LBS MAX. NO SECTION SHALL BE OVER 8' IN TOTAL LENGTH.
4. LOCATE SUPPORTS AS REQUIRED TO PROVIDE RIGID SUPPORT. SUPPORT BRACING SHALL BE PROVIDED AT ALL BENDS.
5. FLUME SUPPORTS SHALL BE BOLTED TO FLOOR USING.....

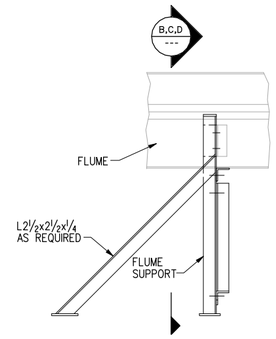

FLUME SUPPORT BRACE

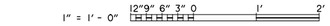

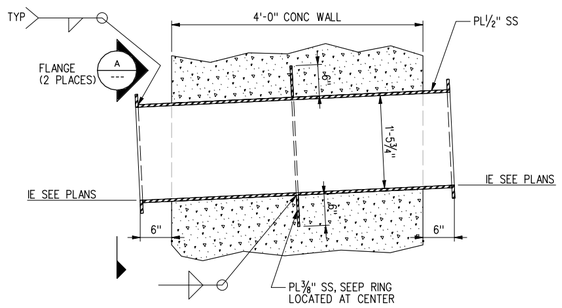

DETAIL (2 / SF3, MF4)

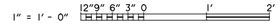

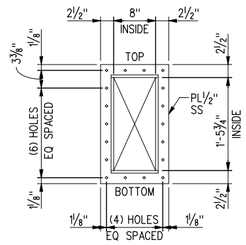

SECTION (A / --)

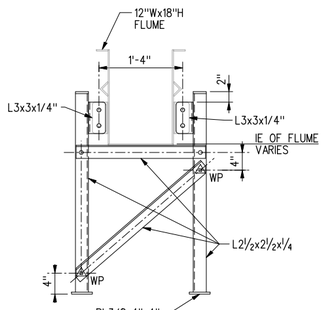

FLUME SUPPORT (B / --)



FLUME SUPPORT (C / --)



FLUME SUPPORT (D / --)

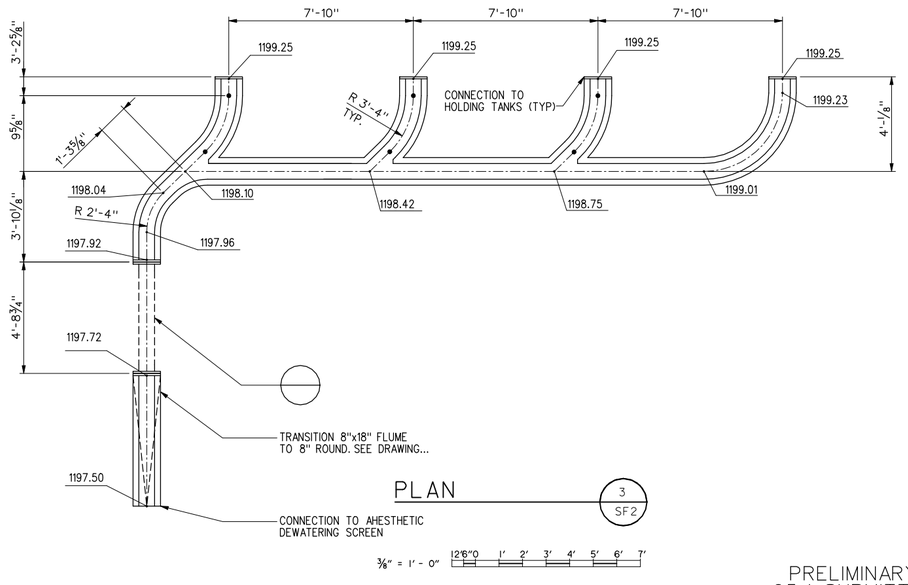

PLAN (3 / SF2)

PRELIMINARY 95% SUBMITTAL

US Army Corps of Engineers
Seattle District

Symbol	Description	Appr.	Date
			/ /

Designed by:
Drawn by: Autoscan, Inc.
Checked by:
Prepared by: FISHPRO | HDR

U.S.ARMY ENGINEER DISTRICT,SEATTLE
CORPS OF ENGINEERS
SEATTLE, WASHINGTON

Date: 16 JUN 08
File: E-56-14-19
Rev.

ADDITIONAL WATER STORAGE PROJECT
HOWARD HANSON DAM
GREEN RIVER WASHINGTON

FLUME PLANS, SECTIONS AND DETAILS

Plate number: MF5
Sheet of

DATE AND TIME PLOTTED: 8/6/2008 3:03:32 PM DESIGN FILE: I:\AECDESIGNS\HHAW\OTHER\HDRINC\2008061\SHSM-MF05.DGN

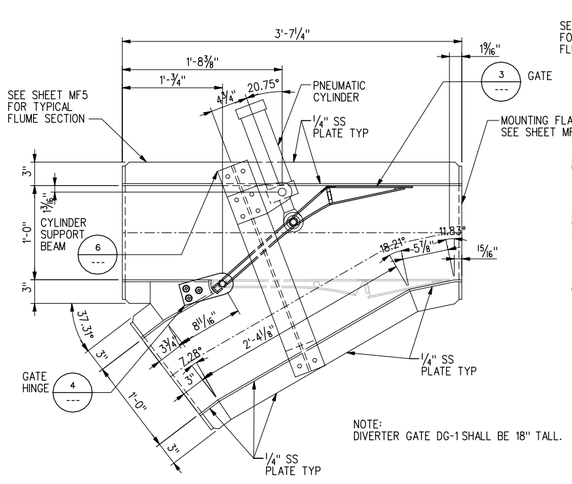

NOTE:
DIVERTER GATE DG-1 SHALL BE 18" TALL.

30° DIVERTER GATE (1 / MF 4)

1½" = 1'-0" 12" 9" 6" 3" 0 1'

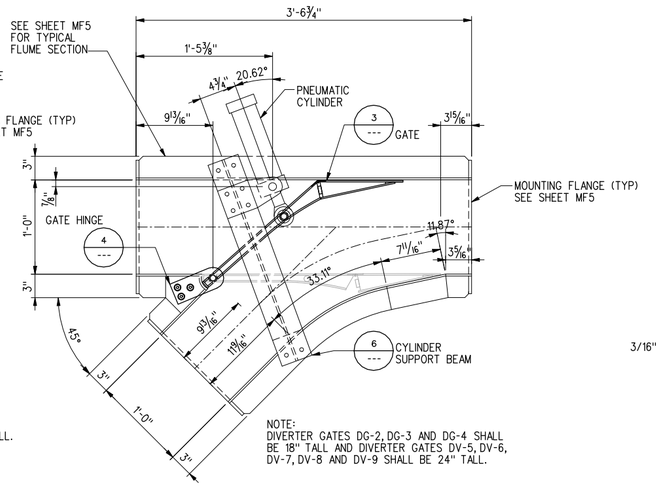

NOTE:
DIVERTER GATES DG-2, DG-3 AND DG-4 SHALL BE 18" TALL AND DIVERTER GATES DV-5, DV-6, DV-7, DV-8 AND DV-9 SHALL BE 24" TALL.

45° DIVERTER GATE (2 / MF 4)

1½" = 1'-0" 12" 9" 6" 3" 0 1'

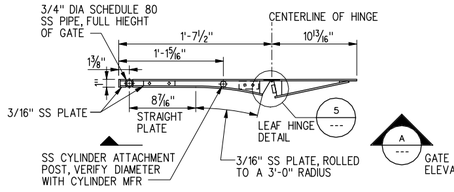

GATE PLAN (3 / --)

1½" = 1'-0" 12" 9" 6" 3" 0 1'

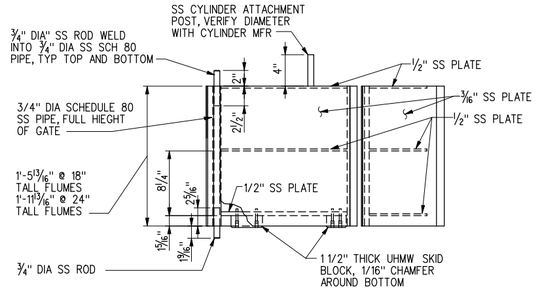

GATE ELEVATION (A / --)

1½" = 1'-0" 12" 9" 6" 3" 0 1'

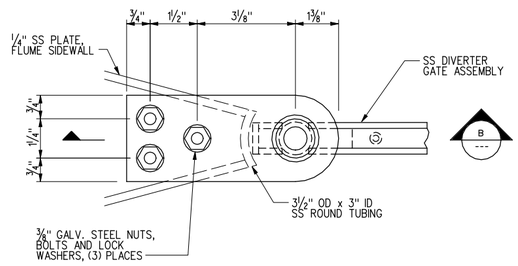

GATE HINGE DETAIL (4 / --)

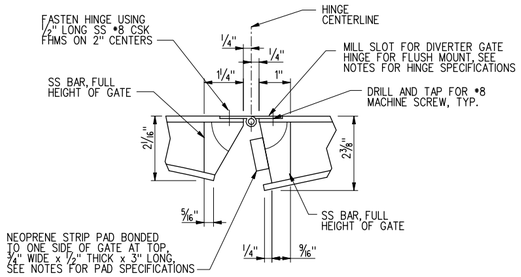

LEAF HINGE DETAIL (5 / --)

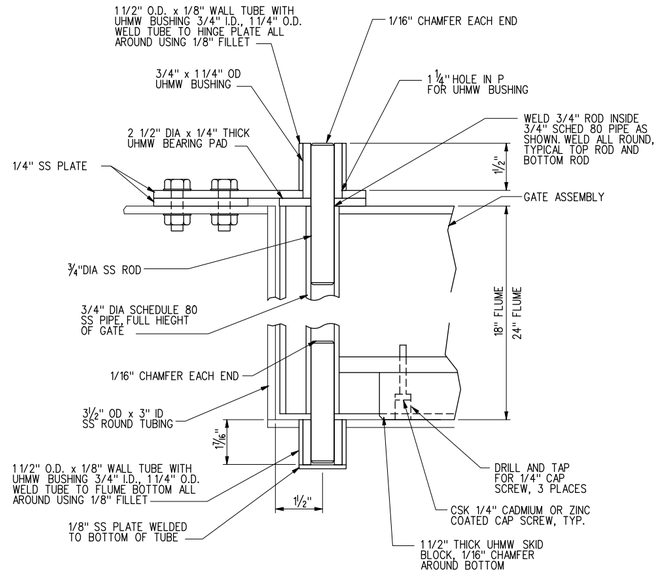

GATE HINGE SECTION (B / --)

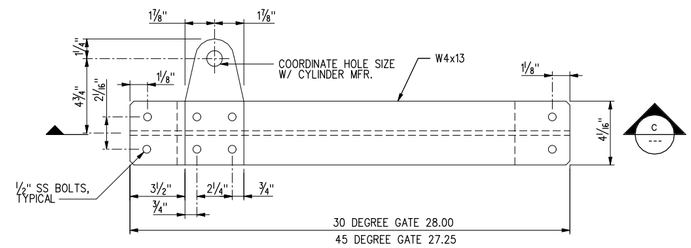

CYLINDER SUPPORT BEAM PLAN (6 / --)

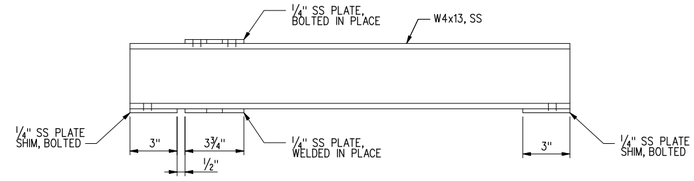

CYLINDER SUPPORT BEAM SECTION (C / --)

PRELIMINARY
95% SUBMITTAL

US Army Corps of Engineers
Seattle District

Symbol	Description	Appr.	Date
			/ /

Date: 16 JUN 08
File • E-56-14-19
Designed by: LP
Drawn by: Autoscan, Inc.
Checked by: LC
Rev.

U.S. ARMY ENGINEER DISTRICT, SEATTLE
CORPS OF ENGINEERS
SEATTLE, WASHINGTON
Prepared by: HDR | FISHPRO

ADDITIONAL WATER STORAGE PROJECT
HOWARD HANSON DAM
GREEN RIVER WASHINGTON

DIVERTER GATE PLANS, SECTIONS AND DETAILS

Plate number: MF6
Sheet of

DATE AND TIME PLOTTED: 8/6/2008 3:03:41 PM DESIGN FILE: I:\AECDESIGNS\HHAM\OTHER\HDRINC\20080611\VHSM-MF06.DGN

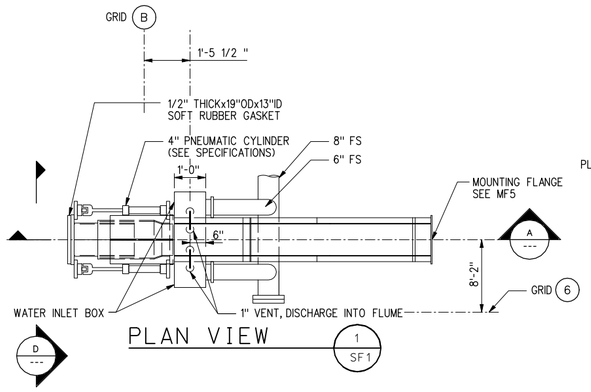

PLAN VIEW 1 SF1

½" = 1' - 0"

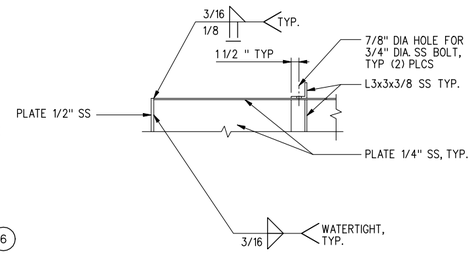

DETAIL 2

1" = 1' - 0"

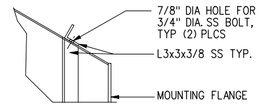

DETAIL 3

1" = 1' - 0"

KEY NOTES:

1. COPE FLANGE TO SUIT
2. L3x3x3/8", TYPE 304 SS
3. PLATE 1/4", TYPE 304 SS
4. PLATE 1/2", TYPE 304 SS
5. ADVANCED THERMAL SYSTEMS GLEN PACK THERMAL EXPANSION JOINT OR EQUAL
6. PLATE 3/4", TYPE 304 SS
7. PLATE 1/4", UHMW
8. TYPE 304 SS, NOM 2x2 BLOCK, TYPICAL (2) PLCS
9. PLATE 3/8", TYPE 304 SS
10. PLATE 1", TYPE 304 SS, MACHINED TO SIZE
11. SPRAY FOAM FILL VOIDS AS SHOWN
12. 3/8" - 16x1"L HEX HD CAP SCREW, TYPE 304 SS W/ SS LOCK WASHER AT 6"oc MAX., 3" FROM ENDS, TYPICAL
13. 3/8-16x7/8" DEEP DRILL AND TAP TYPICAL AT SPACING NOTED IN ITEM 12 ABOVE
14. FB 2x3/8, TYPE 304 SS
15. PLATE 1/4x2-1/4x4, TYPE 304 S.S., (2) PCS REQ'D.
16. RB 1.50" DIAx12.75L, TYPE 304 SS, (1) PC REQUIRED, MACHINE TO SLIDE FIT WITH ITEM 17 BELOW
17. 2" DIA. RD TUBE x 0.25" WALL, TYPE 304 SS, TYPICAL
18. ALUMINUM GUIDE WITH UHMW GUIDE SEATS, MODEL 30 BY GOLDEN HARVEST, INC OR EQUIVALENT TYPICAL EA. SIDE AND AT BOTTOM TO PROVIDE WATERTIGHT SEAL
19. C6x8.3 CHANNEL, TYPE 304 S.S., TYP (2) PLCS.
21. DRILL & TAP 3/4" PLATE (6) FOR 5/16-18x3/4"L SS CNTRSK SKT HD MACH SCREW TYP (4) PLCS EA SIDE OF UHMW, (8) PLCS TOTAL.
22. 5/8-11x1-1/2 EXTENSION SS WELDED STUD W/ SS HEX HD NUT & LOCK WASHER, TYP.
23. MULTITURN ACTUATOR
24. GROOVED PIPE CONNECTION.

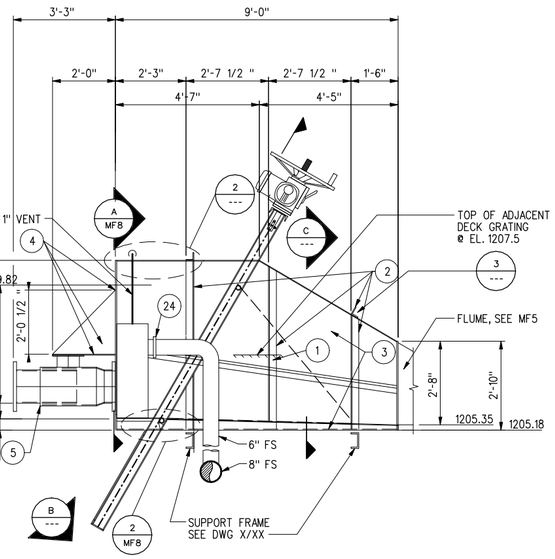

ELEVATION A

½" = 1' - 0"

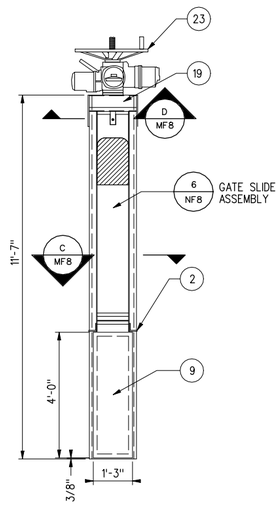

SECTION B

½" = 1' - 0"

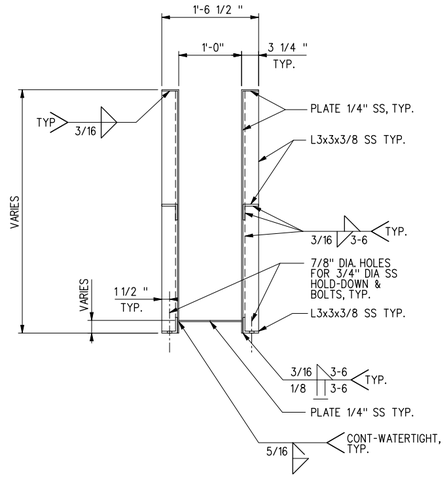

SECTION C

1" = 1' - 0"

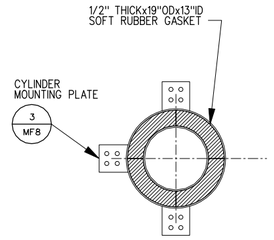

SECTION D

1" = 1' - 0"

PRELIMINARY
95% SUBMITTAL

US Army Corps of Engineers
Seattle District

Symbol	Description	Appr.	Date
			/ /

U.S. ARMY ENGINEER DISTRICT, SEATTLE
CORPS OF ENGINEERS
SEATTLE, WASHINGTON
Prepared by: HDR | FISHPRO
Designed by: LP
Drawn by: Autoscan, Inc.
Checked by: LC
Date: 16 JUN 08
File • E-56-14-19
Rev.

ADDITIONAL WATER STORAGE PROJECT
HOWARD HANSON DAM
GREEN RIVER WASHINGTON

LIFT, HOPPER DOCKING STATION, PLAN, SECTIONS AND DETAILS

Plate number: MF 7
Sheet of

DATE AND TIME PLOTTED: 8/6/2008 3:03:44 PM DESIGN FILE: I:\AECDESIGNS\HHAW\OTHER\HDRINC\20080611\HHSM-MF07.DGN

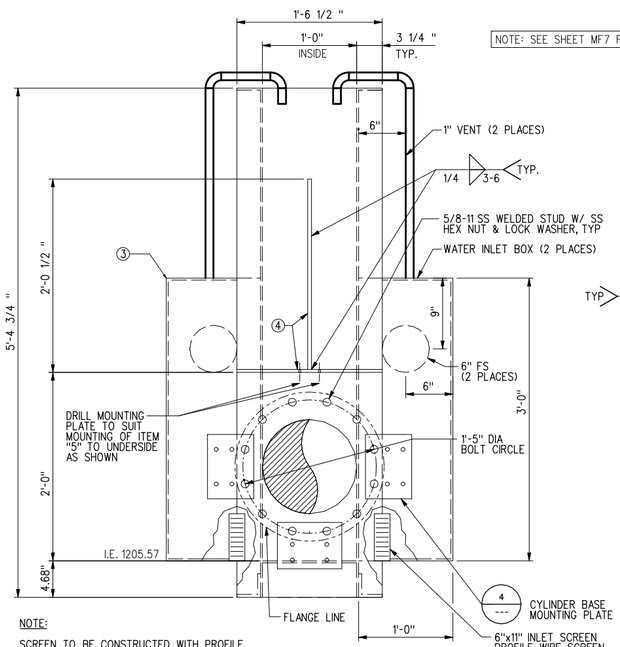

NOTE:

SCREEN TO BE CONSTRUCTED WITH PROFILE WIRE OR WEDGE WIRE SCREEN W/ 1.75mm SLOTS RUNNING HORIZONTAL.

NOTE: SEE SHEET MF7 FOR KEYNOTES

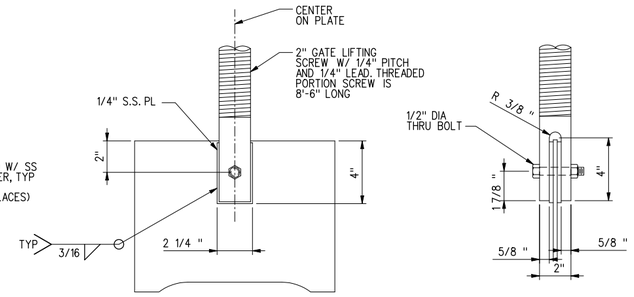

DETAIL 1 / ---

3" = 1'-0" 1" 0 3" 6" 9" 12"

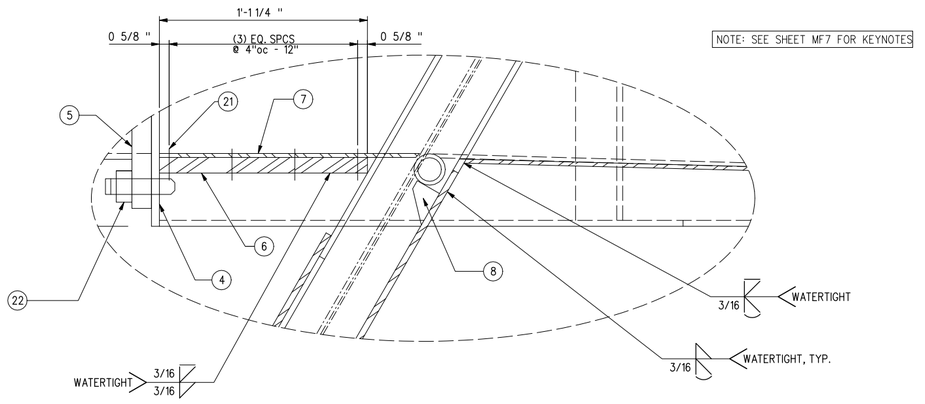

NOTE: SEE SHEET MF7 FOR KEYNOTES

DETAIL 2 / MF 7

3" = 1'-0" 1" 0 3" 6" 9" 12"

SECTION A / MF 7

1½" = 1'-0" 12" 9" 6" 3" 0 1'

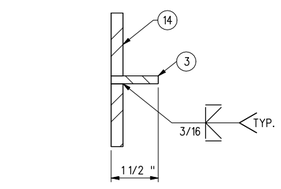

SECTION B / ---

6" = 1'-0" 1" 0 3" 6"

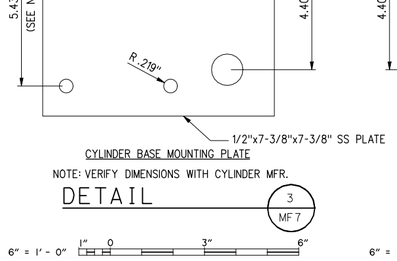

NOTE: VERIFY DIMENSIONS WITH CYLINDER MFR.

DETAIL 3 / MF 7

6" = 1'-0" 1" 0 3" 6"

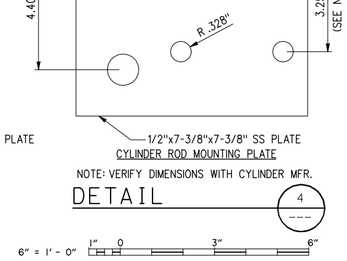

NOTE: VERIFY DIMENSIONS WITH CYLINDER MFR.

DETAIL 4 / ---

6" = 1'-0" 1" 0 3" 6"

NOTE: SEE SHEET MF7 FOR KEYNOTES

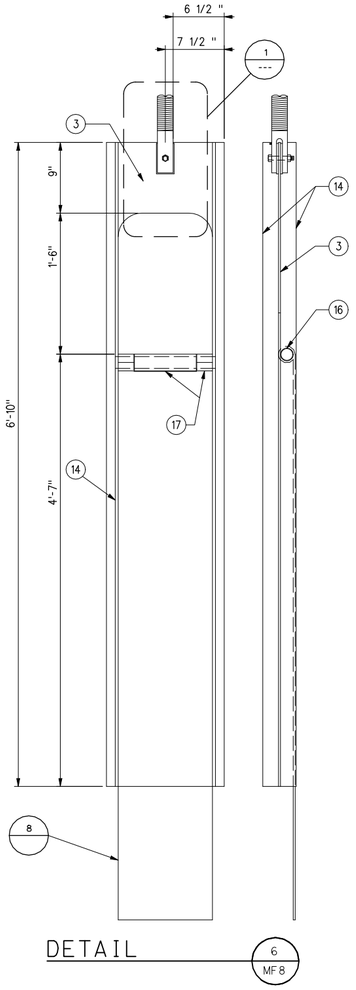

DETAIL 6 / MF 8

1½" = 1'-0" 12" 9" 6" 3" 0 1'

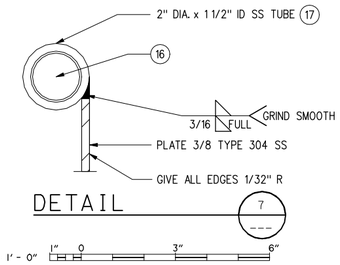

DETAIL 7 / ---

6" = 1'-0" 1" 0 3" 6"

NOTE: SEE SHEET MF7 FOR KEYNOTES

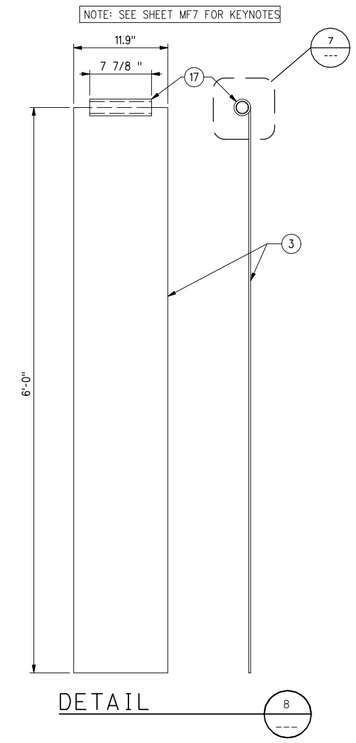

DETAIL 8 / ---

1½" = 1'-0" 12" 9" 6" 3" 0 1'

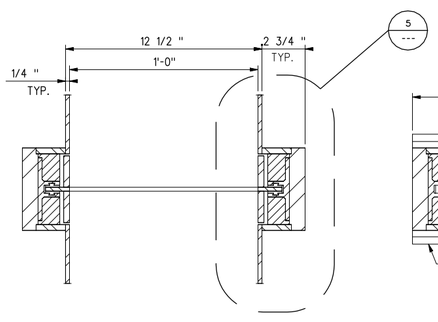

SECTION C / MF 7

3" = 1'-0" 1" 0 3" 6" 9" 12"

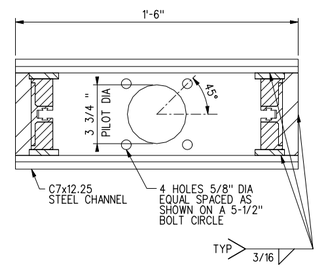

SECTION D / MF 7

3" = 1'-0" 1" 0 3" 6" 9" 12"

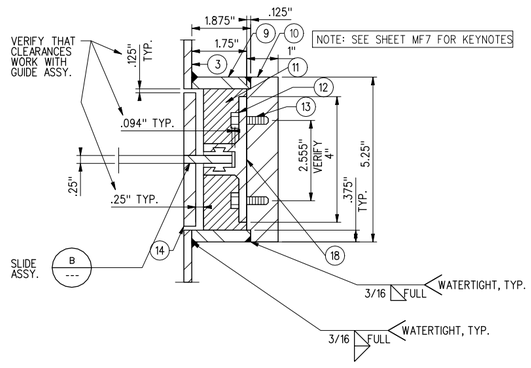

NOTE: SEE SHEET MF7 FOR KEYNOTES

DETAIL 5 / ---

6" = 1'-0" 1" 0 3" 6"

PRELIMINARY
95% SUBMITTAL

US Army Corps of Engineers
Seattle District

Symbol	Description	Appr.	Date
			/ /

Designed by: LP
Drawn by: Autoscan, Inc.
Checked by: LC
Date: 16 JUN 08
File #: E-56-14-19
Rev.

U.S.ARMY ENGINEER DISTRICT,SEATTLE
CORPS OF ENGINEERS
SEATTLE, WASHINGTON
Prepared by: HDR | FISHPRO

ADDITIONAL WATER STORAGE PROJECT
HOWARD HANSON DAM
GREEN RIVER WASHINGTON

LIFT HOPPER DOCKING STATION SECTIONS AND DETAILS

Plate number:
MF8
Sheet of

DATE AND TIME PLOTTED: 8/6/2008 3:03:52 PM DESIGN FILE: I:\AECDESIGNS\HHAW\OTHER\HDRINC\20080611\VHHSM-MF08.DGN

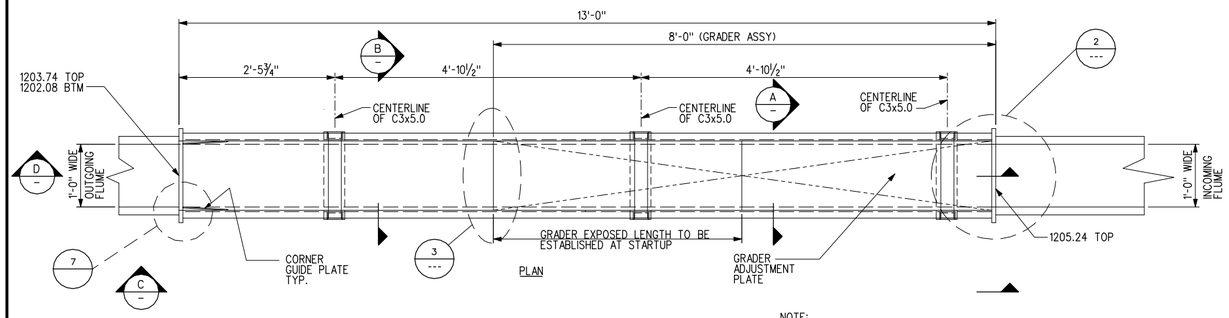

NOTE:
UTILITY WATER SPRAY NOZZLE AND FLUME SUPPLY WATER PIPING NOT SHOWN.

GRADER PLAN — 1 SF1

1" = 1'-0" 12"9" 6" 3" 0 1' 2'

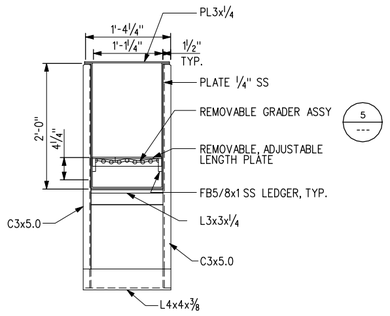

GRADER SECTION — A

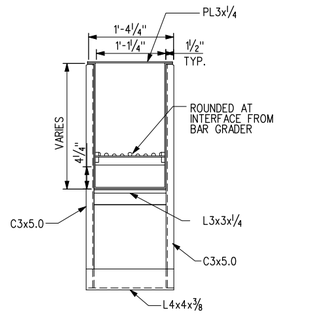

GRADER SECTION — B

1" = 1'-0" 12"9" 6" 3" 0 1' 2'

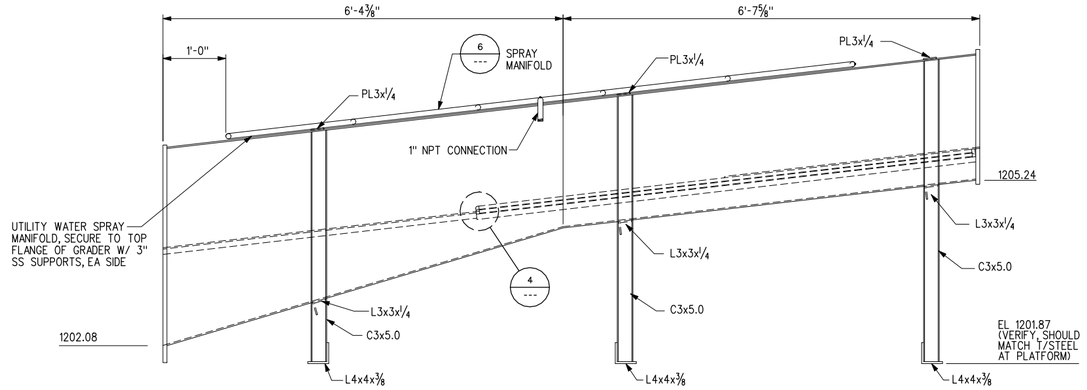

ELEVATION — C

1" = 1'-0" 12"9" 6" 3" 0 1' 2'

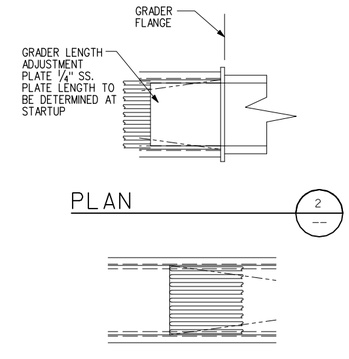

PLAN — 2

PLAN — 3

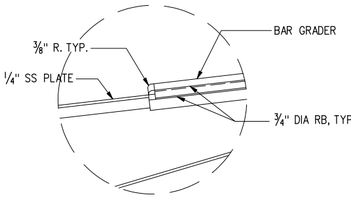

DETAIL — 4

½" = 1'-0" 12"6" 0 1' 2' 3' 4' 5'

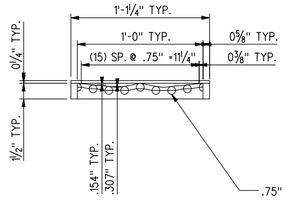

DETAIL — 5

½" = 1'-0" 12"6" 0 1' 2' 3' 4' 5'

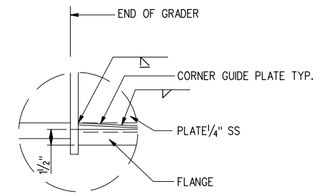

DETAIL — 7

½" = 1'-0" 12"6" 0 1' 2' 3' 4' 5'

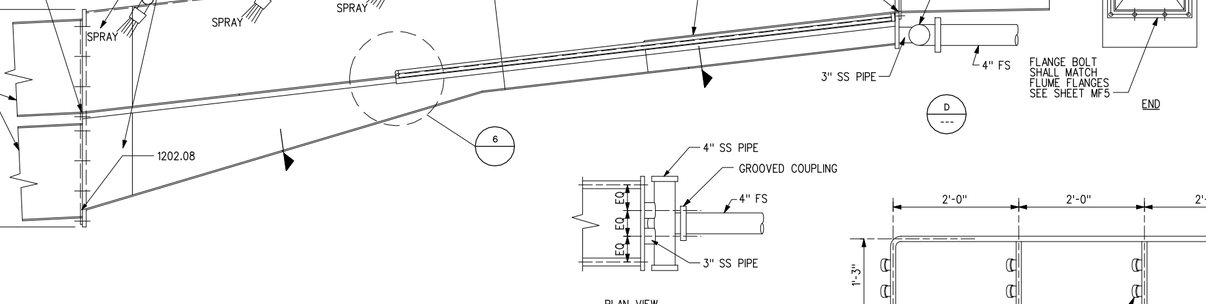

PLAN VIEW

WATER SUPPLY — D

1" = 1'-0" 12"9" 6" 3" 0 1' 2'

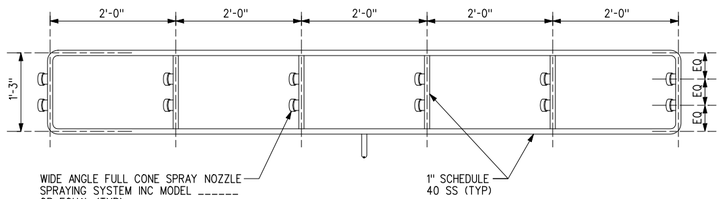

SPRAY MANIFOLD — 6

1" = 1'-0" 12"9" 6" 3" 0 1' 2'

PRELIMINARY
95% SUBMITTAL

US Army Corps of Engineers
Seattle District

Symbol	Description	Date	Appr.	Symbol	Description
		/ /			

Date: 16 JUN 08
File • E-56-14-19
Rev.

Designed by: LP
Drawn by: Autoscan, Inc.
Checked by: LC

U.S.ARMY ENGINEER DISTRICT SEATTLE
CORPS OF ENGINEERS
SEATTLE, WASHINGTON

Prepared by: HDR | FISHPRO

ADDITIONAL WATER STORAGE PROJECT
HOWARD HANSON DAM
GREEN RIVER WASHINGTON

GRADER PLAN, SECTIONS & DETAILS

Plate number: MF9
Sheet of

I:\AECDESIGNS\HHAW\OTHER\HDRINC\20080611\VHSM-MF09.DGN
DATE AND TIME PLOTTED: 8/6/2008 3:03:55 PM DESIGN FILE: I:\AE

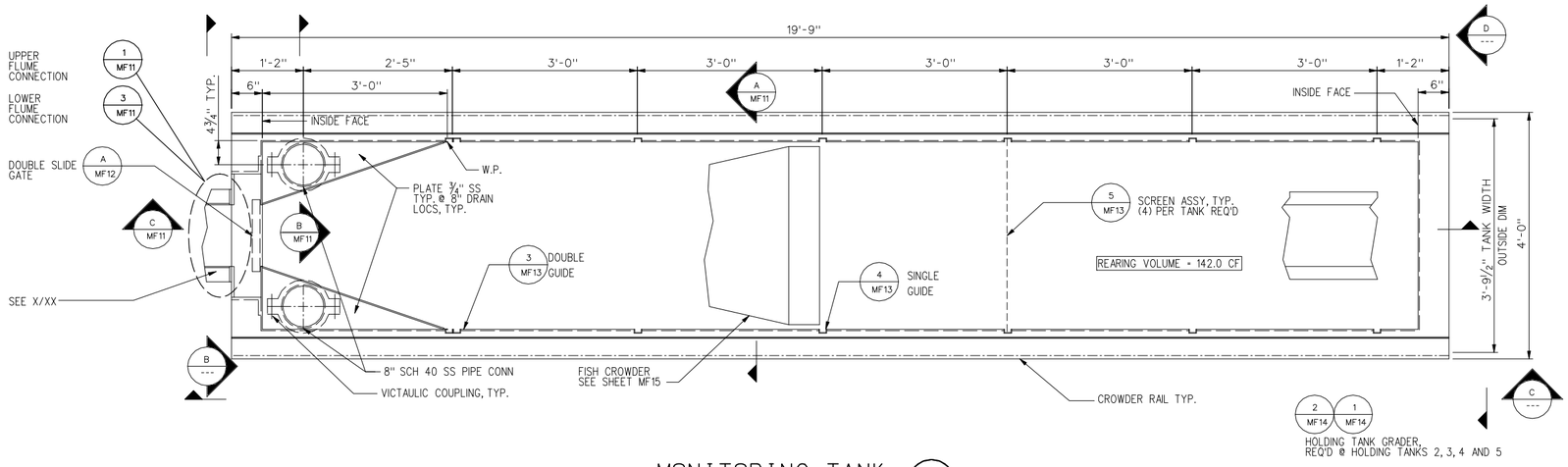

MONITORING TANK PLAN (1 / SF1)

1" = 1'-0" 12"9" 6" 3" 0 1' 2'

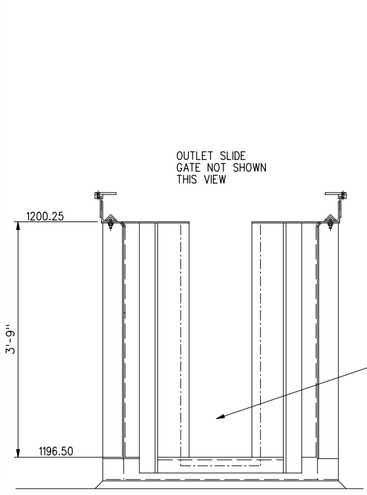

MONITORING TANK OUTLET END ELEVATION (B / --)

1" = 1'-0" 12"9" 6" 3" 0 1' 2'

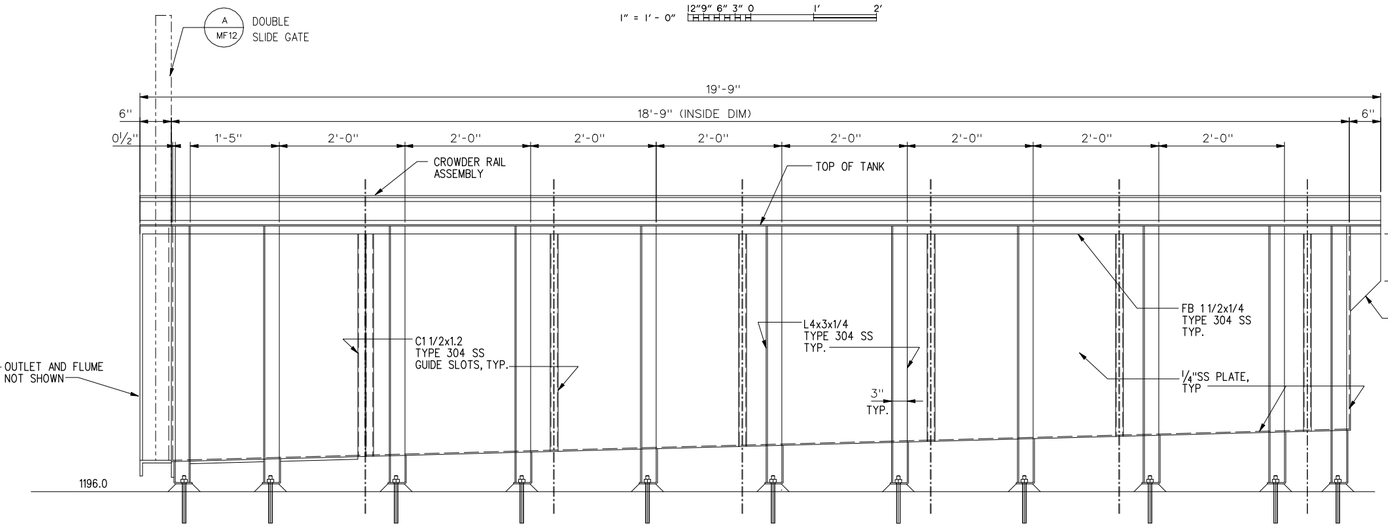

MONITORING TANK SIDE ELEVATION (C / --)

1" = 1'-0" 12"9" 6" 3" 0 1' 2'

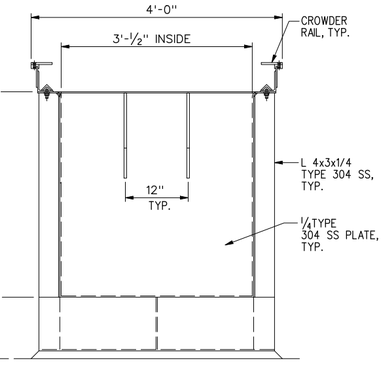

MONITORING TANK INLET END ELEVATION (D / --)

1" = 1'-0" 12"9" 6" 3" 0 1' 2'

PRELIMINARY
95% SUBMITTAL

US Army Corps of Engineers
Seattle District

Symbol	Description	Date
Appr.		/ /

U.S. ARMY ENGINEER DISTRICT, SEATTLE
CORPS OF ENGINEERS
SEATTLE, WASHINGTON

Prepared by: HDR | FISHPRO

Designed by:
Drawn by: Autoscan, Inc.
Checked by:
Date: 16 JUN 08
File • E-56-14-19
Rev.

ADDITIONAL WATER STORAGE PROJECT
HOWARD HANSON DAM
GREEN RIVER WASHINGTON

MONITORING FACILITY HOLDING TANK PLAN AND SECTIONS

Plate number: MF 10
Sheet of

DATE AND TIME PLOTTED: 8/6/2008 3:04:03 PM DESIGN FILE: I:\AECDESIGNS\HHAW\OTHER\HDRINC\20080611\VHHSM-MF10.DGN

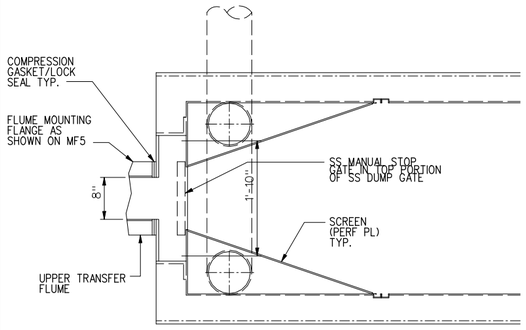

MONITORING TANK
UPPER FLUME CONN. (1 / MF10)

1" = 1'-0" 12"9" 6" 3" 0 1' 2'

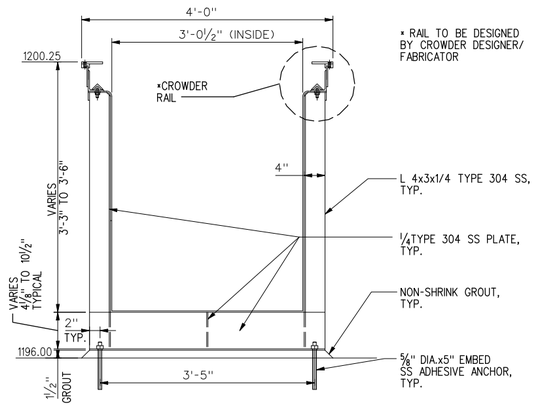

MONITORING TANK SECTION (A / MF10)

1" = 1'-0" 12"9" 6" 3" 0 1' 2'

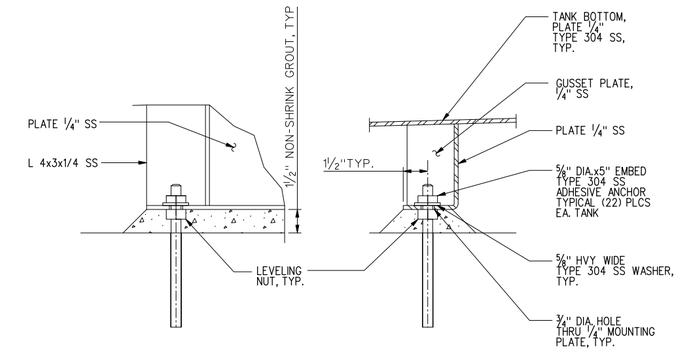

MONITORING TANK ANCHOR BOLT (2 / ---)

3" = 1'-0" 1" 0 3" 6" 9" 12"

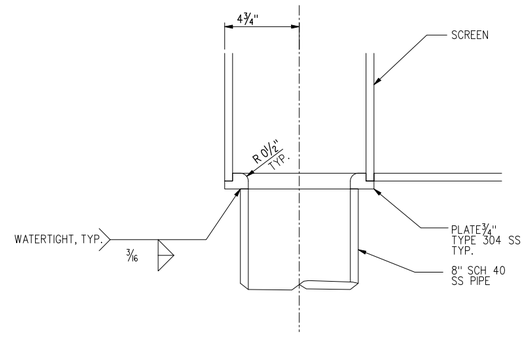

SECTION (B / MF10)

3" = 1'-0" 1" 0 3" 6" 9" 12"

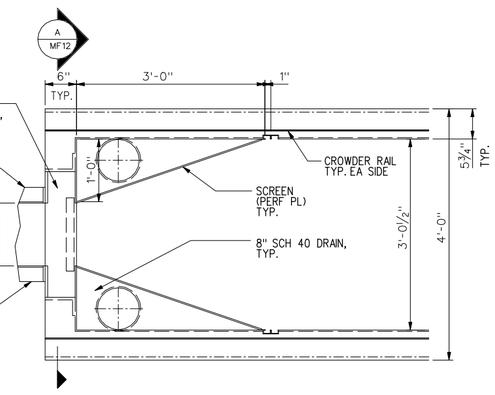

MONITORING TANK
LOWER FLUME CONN. (3 / MF10)

1" = 1'-0" 12"9" 6" 3" 0 1' 2'

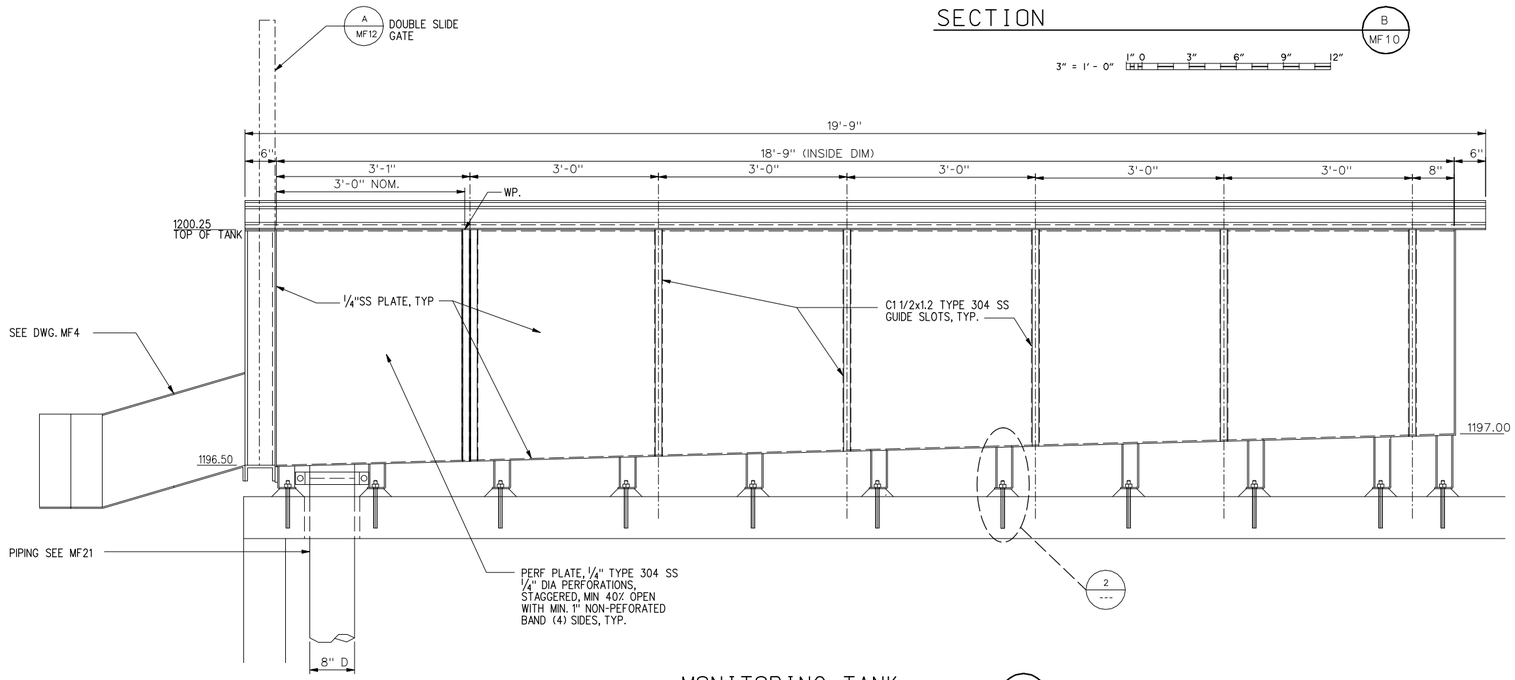

MONITORING TANK
LONGITUDINAL SECTION (C / MF10)

1" = 1'-0" 12"9" 6" 3" 0 1' 2'

PRELIMINARY
95% SUBMITTAL

US Army Corps of Engineers
Seattle District

Symbol	Description	Appr.	Date
			/ /

Date: 16 JUN 08
File #: E-56-14-19
Rev.
Designed by: LP
Drawn by: Autoscan, Inc.
Checked by: LC

U.S.ARMY ENGINEER DISTRICT,SEATTLE
CORPS OF ENGINEERS
SEATTLE, WASHINGTON
Prepared by: HDR | FISHPRO

ADDITIONAL WATER STORAGE PROJECT
HOWARD HANSON DAM
GREEN RIVER WASHINGTON

MONITORING FACILITY
HOLDING TANK
SECTIONS AND DETAILS

Plate number: MF11
Sheet of

DATE AND TIME PLOTTED: 8/6/2008 3:04:05 PM DESIGN FILE: I:\AECDESIGNS\HHAW\OTHER\HDR\NC\2008061F\VHHSM-MF11.DGN

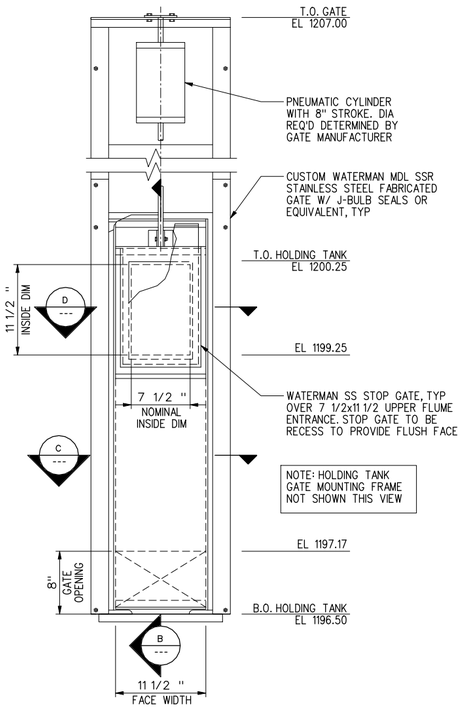

HOLDING TANK GATE INT ELEV (A / MF10)

1½" = 1' - 0"

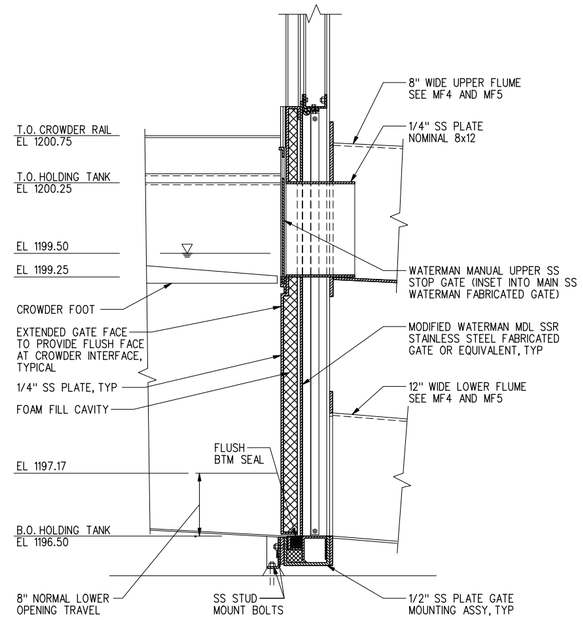

SECTION (B / --)

1½" = 1' - 0"

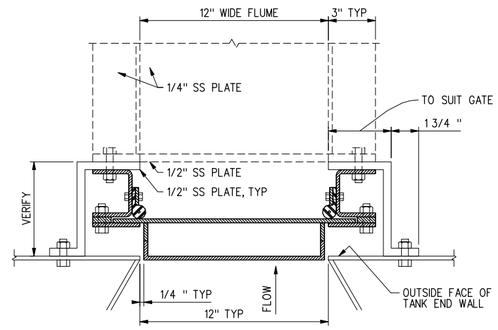

SECTION (C / --)

3" = 1' - 0"

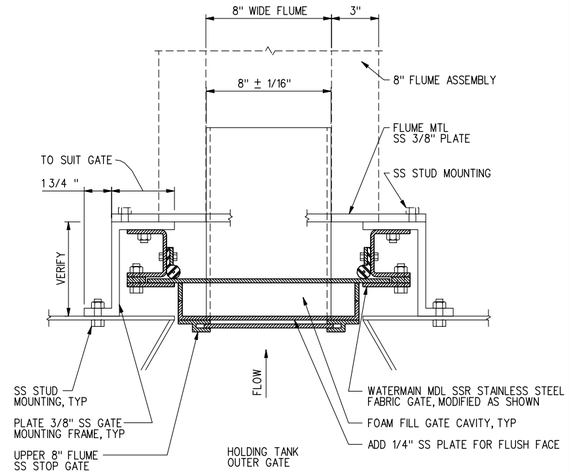

SECTION (D / --)

3" = 1' - 0"

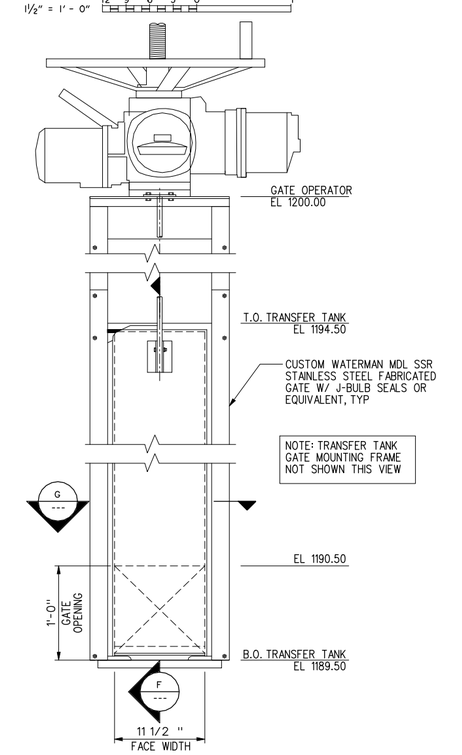

TRANSFER TANK GATE INT ELEV (E / MF13)

1½" = 1' - 0"

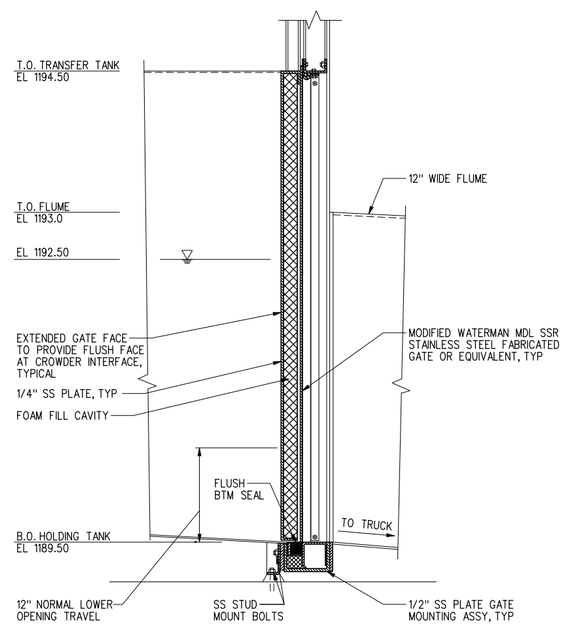

SECTION (F / --)

1½" = 1' - 0"

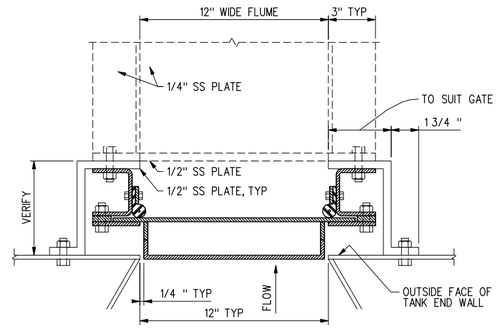

SECTION (G / --)

3" = 1' - 0"

PRELIMINARY
95% SUBMITTAL

US Army Corps of Engineers
Seattle District

Symbol	Description	Appr.	Date
		/	/

Designed by: LP
Drawn by: Autoscan, Inc.
Checked by: LC
Date: 16 JUN 08
File • E-56-14-19
Rev.

U.S.ARMY ENGINEER DISTRICT,SEATTLE
CORPS OF ENGINEERS
SEATTLE, WASHINGTON
Prepared by: HDR | FISHPRO

ADDITIONAL WATER STORAGE PROJECT
HOWARD HANSON DAM
GREEN RIVER
WASHINGTON

HOLDING TANK AND TRANSFER TANK GATE SECTIONS AND DETAILS

Plate number: MF12
Sheet of

DATE AND TIME PLOTTED: 8/6/2008 3:04:07 PM DESIGN FILE: I:\AECDESIGNS\HHAW\OTHER\HDRINC\2008061\R\HHSM-MF12.DGN

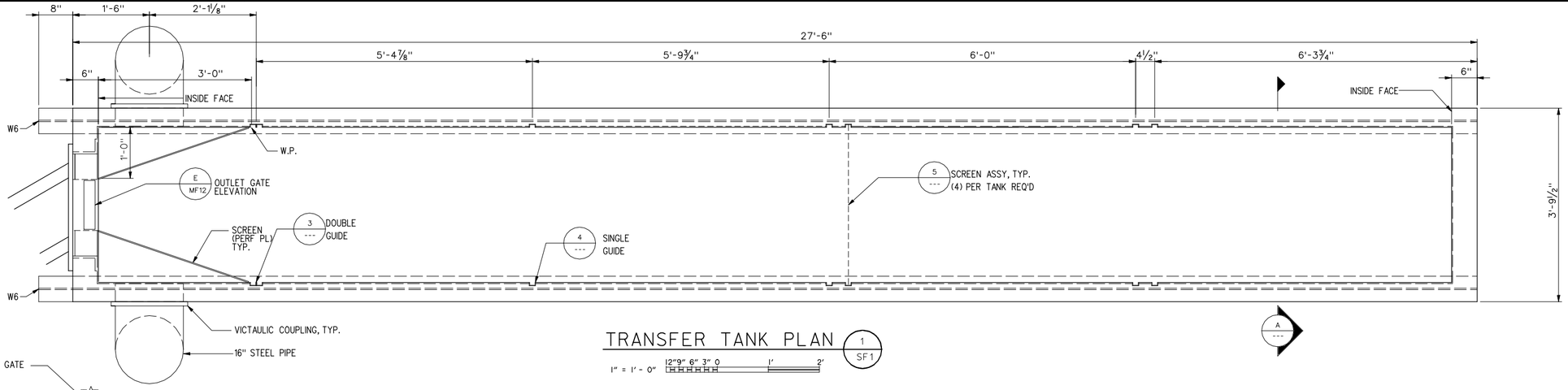

TRANSFER TANK PLAN

1 / SF1

1" = 1'-0"

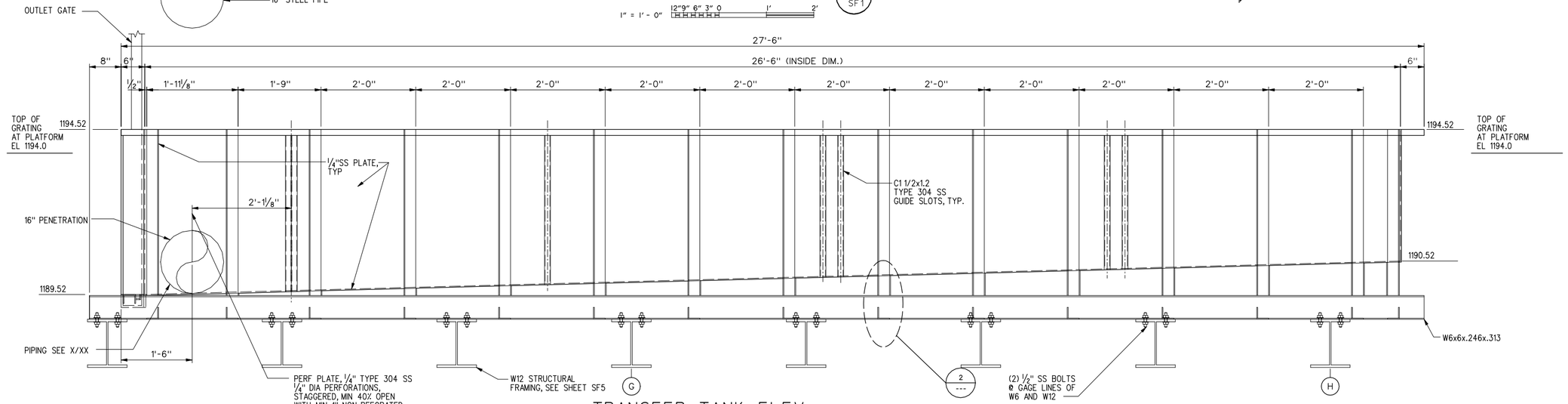

TRANSFER TANK ELEV

1" = 1'-0"

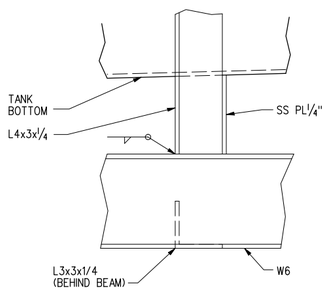

DETAIL 2

3" = 1'-0"

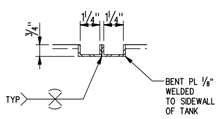

DOUBLE GUIDE SLOT 3

MF10, MF13

3" = 1'-0"

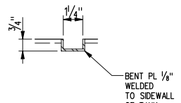

SINGLE GUIDE SLOT 4

MF10, MF13

3" = 1'-0"

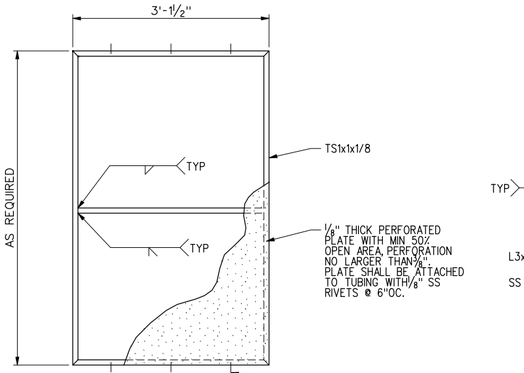

SCREEN ASSEMBLY DETAIL 5

MF10, MF13

1" = 1'-0"

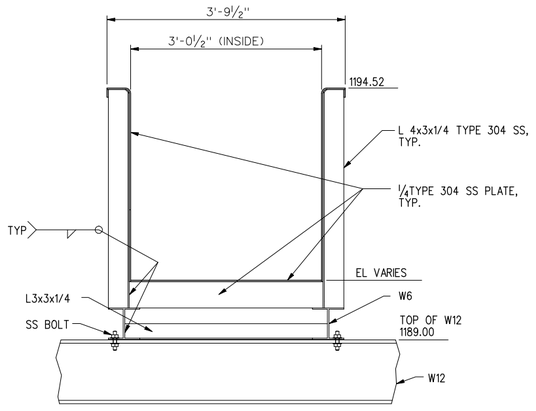

TRANSFER TANK SECTION A

1" = 1'-0"

PRELIMINARY
95% SUBMITTAL

US Army Corps of Engineers
Seattle District

Symbol	Description	Date
		/ /

Appr.	Symbol

Designed by: LP
Drawn by: Autoscon, Inc.
Checked by: LC
Date: 16 JUN 08
File • E-56-14-19
Rev.

U.S.ARMY ENGINEER DISTRICT,SEATTLE
CORPS OF ENGINEERS
SEATTLE, WASHINGTON
Prepared by: HDR | FISHPRO

ADDITIONAL WATER STORAGE PROJECT
HOWARD HANSON DAM
GREEN RIVER WASHINGTON

TRUCK TRANSFER HOLDING TANK PLAN, SECTION & DETAILS

Plate number: MF13
Sheet of

DATE AND TIME PLOTTED: 8/6/2008 3:04:16 PM DESIGN FILE: I:\AECDESIGNS\HHAM\OTHER\HDRINC\2008061\SHHSM-MF13.DGN

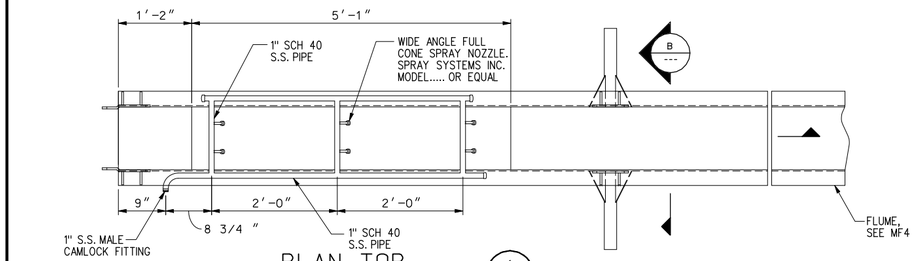

PLAN TOP 1 / MF10

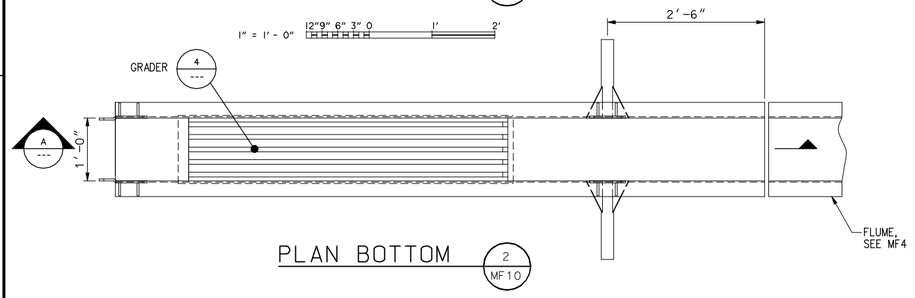

PLAN BOTTOM 2 / MF10

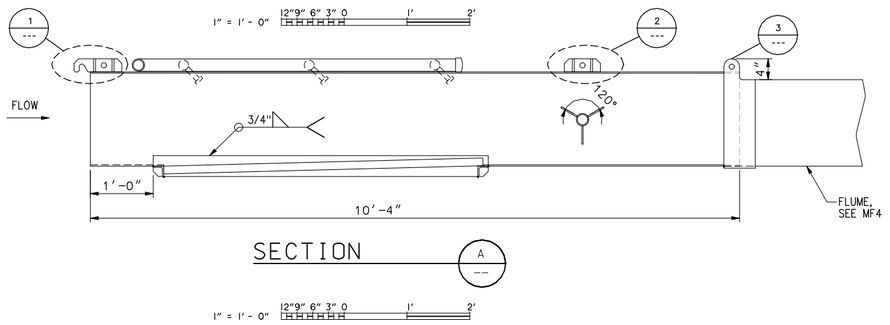

SECTION A / --

1" = 1'-0" 12"9" 6" 3" 0 1' 2'

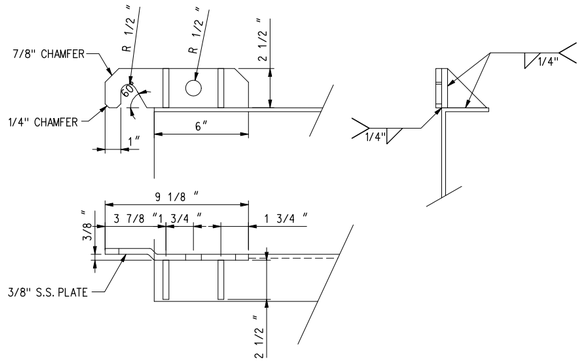

DETAIL 1 / --

3" = 1'-0" 1" 0 3" 6" 9" 12"

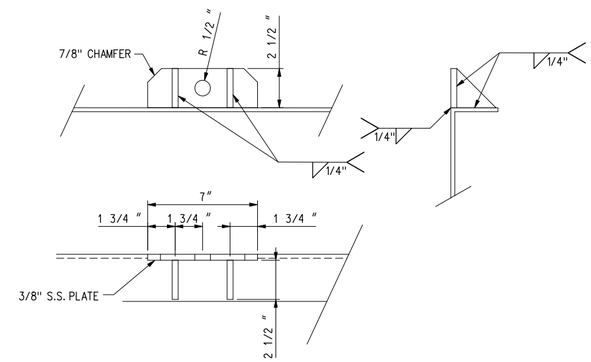

DETAIL 2 / --

3" = 1'-0" 1" 0 3" 6" 9" 12"

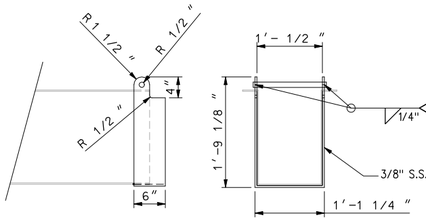

HINGE DETAIL 3 / --

1" = 1'-0" 12"9" 6" 3" 0 1' 2'

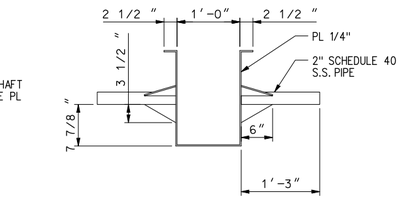

SECTION B / --

1" = 1'-0" 12"9" 6" 3" 0 1' 2'

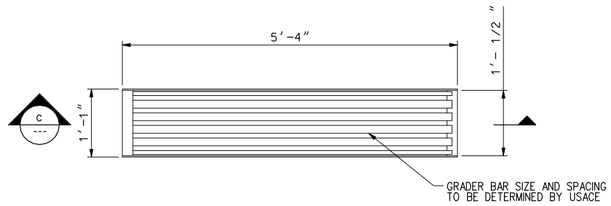

GRADER PLAN 4 / --

1" = 1'-0" 12"9" 6" 3" 0 1' 2'

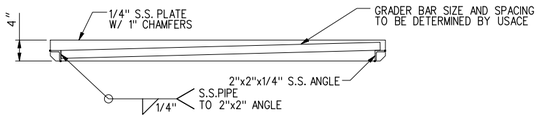

GRADER SECTION C / --

1" = 1'-0" 12"9" 6" 3" 0 1' 2'

PRELIMINARY 95% SUBMITTAL

US Army Corps of Engineers
Seattle District

Symbol	Description	Appr.	Date
			/ /

Designed by: LP
Drawn by: Autoscan, Inc.
Checked by: LC
Date: 16 JUN 08
File: E-56-14-19
Rev.

U.S.ARMY ENGINEER DISTRICT,SEATTLE
CORPS OF ENGINEERS
SEATTLE, WASHINGTON
Prepared by: HDR | FISHPRO

ADDITIONAL WATER STORAGE PROJECT
HOWARD HANSON DAM
GREEN RIVER WASHINGTON

HOLDING TANK GRADER PLAN, SECTIONS AND DETAILS

Plate number: MF14
Sheet of

DATE AND TIME PLOTTED: 8/6/2008 3:04:18 PM DESIGN FILE: I:\AECDES\HHAW\OTHER\HDRINC\20080619\VHHSM-MF14.DGN

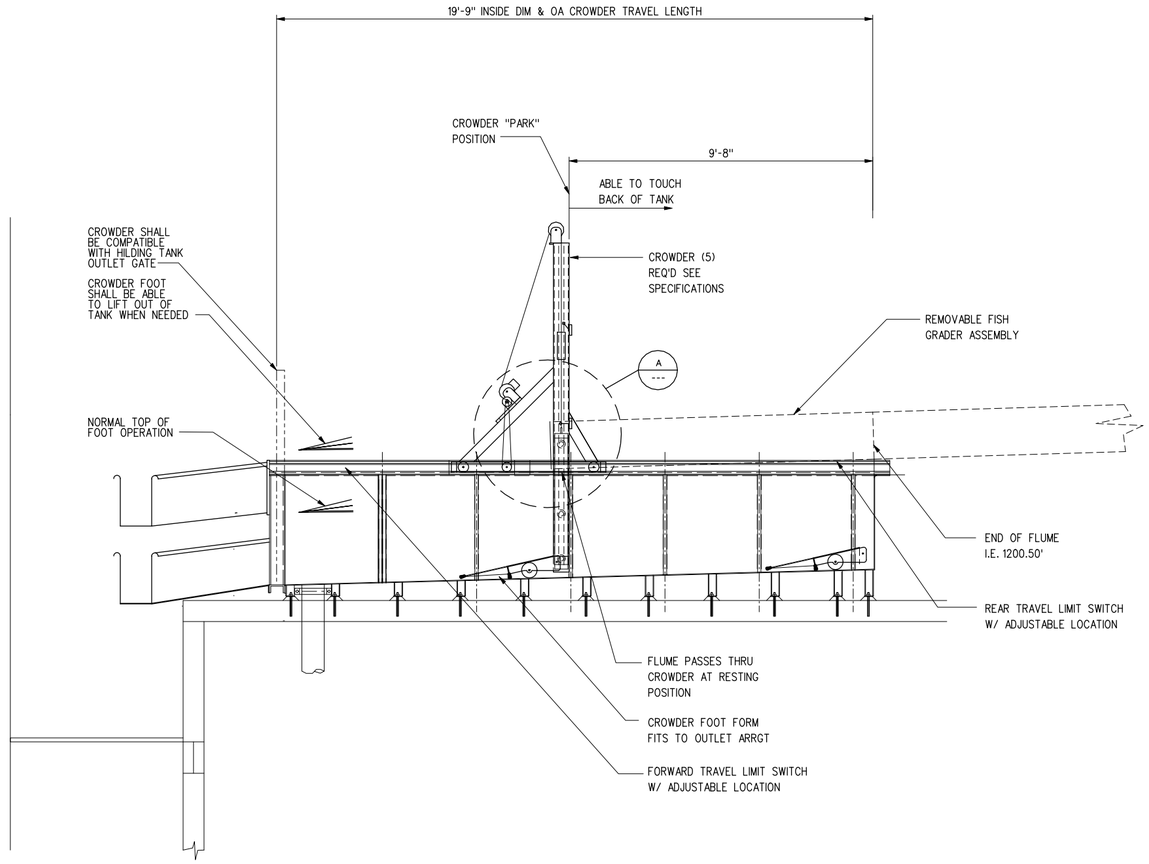

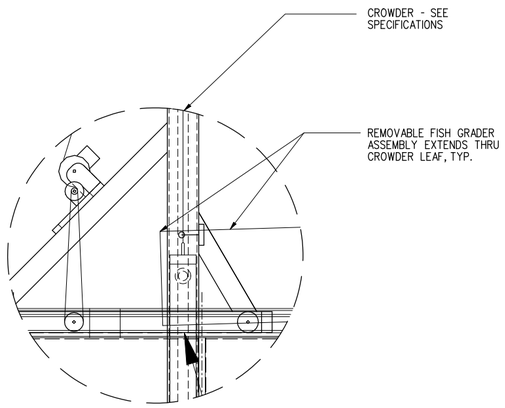

PLAN A

1" = 1'-0" 12"9" 6" 3" 0 1' 2'

NOTES:

1. THE FISH CROWDER SUPPLIER SHALL PROVIDE FISH CROWDERS FOR HOLDING TANKS 1 - 5. ALL CROWDERS SHALL BE COMPLETE AND FUNCTIONAL SYSTEMS, AND INCLUDE ALL STRUCTURAL, ELECTRICAL, MECHANICAL AND CONTROL SYSTEMS REQUIRED FOR CROWDER OPERATION.
2. EACH FISH CROWDER SHALL HAVE AN ELECTRIC DRIVE MOTOR AND AN ELECTRIC LIFT MOTOR TO ALLOW FORWARD AND REVERSE MOVEMENT AS WELL AS LIFTING AND LOWERING OF THE CROWDER LEAF. THE FISH CROWDER SUPPLIER SHALL SIZE AND PROVIDE THE DRIVE AND LIFT MOTORS.
3. THE FISH CROWDER SUPPLIER SHALL DESIGN THE ELECTRIC SUPPLY SYSTEM TO THE CROWDER MOTORS. THIS POWER SUPPLY SYSTEM MUST ALLOW FULL MOVEMENT OF THE CROWDERS AS SHOWN ON THE DRAWINGS WITHOUT IMPACT TO THE TROLLEY MOUNTED HOIST SYSTEM ABOVE THE CROWDERS OR WITHOUT LIMITING ACCESS TO THE UPSTREAM OR DOWNSTREAM ENDS OR TO THE SIDES OF THE HOLDING TANKS.
4. HOLDING TANK CROWDERS SHALL BE DESIGNED TO MOVE FORWARD AND BACKWARD AT AN ADJUSTABLE RATE. THE SPEED SHALL BE ADJUSTABLE FROM 0 TO 2.5 FEET PER SECOND WHILE CROWDER LEAF IS IN DOWN POSISTION.
5. THE DRIVE SYSTEM SHALL BE DESIGNED TO UTILIZE THE TRACK SYSTEM SHOWN ON SHEET _____.
6. THE LIFT SYSTEM FOR THE CROWDER LEAF SHALL BE CAPABLE LIFTING THE CROWDER LEAF AND FOOT COMPLETELY OUT OF THE WATER. THE LEAF LIFTING SYSTEM SHALL BE CAPABLE OF LIFTING THE LEAF ASSEMBLY AT A RATE OF 10 FEET PER MINUTE.
7. THE CROWDER LEAF SHALL BE DESIGNED WITH A TOE SECTION THAT DROPS AS THE CROWDER MOVES TO THE DOWNSTREAM END OF THE TANK SUCH THAT THE CROWDER LEAF CAN REMAIN IN THE SAME VERTICAL POSITION AS IT MOVES DOWNSTREAM. THE TOW SECTION SHALL BE DESIGNED TO CONFORM TO THE GEOMETRY OF THE DOWNSTREAM END. WHEN LIFTED AT THE DOWNSTREAM END, THE TOW SECTION SHALL ACT AS A LIFT SYSTEM TO VERTICALLY CROWD THE FISH UPWARD.
8. THE CROWDER LEAF SHALL PROHIBIT FISH FROM PASSING FROM THE FRONT SIDE TO THE BACK SIDE OF THE CROWDER AND VISA VERSA WHEN IN THE LOWERED POSITION.
9. STIFF BRISTLE BRUSHES OR APPROVED EQUAL SHALL BE USED ALONG THE EDGES AND BOTTOM TO ALLOW CROWDER MOVEMENT BUT KEEP FISH FROM ESCAPING AROUND THE CROWDER LEAF EDGES AND BOTTOM.
10. THE CROWDER LEAF SHALL UTILIZE PERFORATED PLATE, WEDGE WIRE OR PROFILE WIRE SCREEN TO ALLOW WATER TO PASS THROUGH WHEN MOVING, BUT RESTRAIN FISH FROM PASSING THROUGH. THE MAXIMUM HOLE OR SLOT DIMENSION SHALL BE 0.125 INCHES AND THE PERCENT OPEN AREA SHALL BE 40% OR GREATER.
11. IN THE FULLY LOWERED POSITION THE SYSTEM SHALL BE DESIGNED TO ALLOW THE REMOVABLE FISH GRADERS (SHOWN ON SHEET MF14) TO PASS LARGER FISH THROUGH (OVER THE TOP OF THE CROWDER LEAF AS SHOWN ON THE DRAWINGS).
12. THE SYSTEM SHALL BE CONTROLLED BY PENDANT OR UNIT MOUNTED CONTROL SYSTEM THAT FOLLOWS THE MOVEMENT OF THE SYSTEM. THE SYSTEM SHALL ALLOW THE FORWARD OR REVERSE MOTION OF THE TROLLEY, AND THE UP AND DOWN MOTION OF THE LIFT SYSTEM TO BE STARTED AND STOPPED IN ANY POSITION UNLESS PROHIBITED BY LIMIT SWITCHES.
13. IN RAISED AND PARTIALLY RAISED POSITIONS THE SYSTEM SHALL HOLD THE CROWDER LEAF IN PLACE.
14. LIMIT SWITCHES SHALL BE PROVIDED TO STOP THE FORWARD AND REVERSE TRAVEL OF THE CROWDERS AT THE UP AND DOWNSTREAM ENDS AS SHOWN ON THE DRAWINGS.
15. LIMIT SWITCHES SHALL BE PROVIDED AT THE TOP AND BOTTOM OF THE LEAF TRAVEL TO STOP THE UPWARD AND DOWNWARD TRAVEL OF THE CROWDER LEAF.
16. ALL MECHANICAL SYSTEMS SHALL BE REPARABLE.
17. ALL MECHANICAL AND ROTATING COMPONENTS SHALL BE DESIGNED FOR UP TO 1,000,000 CYCLES OF OPERATION.
18. THE CROWDER SHALL BE STRUCTURALLY DESIGNED TO WITHSTAND ALL LOADINGS EXERTED ON THE ASSEMBLY INCLUDING BUT NOT LIMITED TO DRIVE SYSTEM LOADINGS, SEISMIC LOADINGS, OSCILLATORY AND VIBRATION LOADINGS, FATIGUE LOADINGS AND LOADINGS IMPARTED DURING INSTALLATION AND REMOVAL.
19. ALL STRUCTURAL MEMBERS AND COMPONENTS SHALL BE DESIGNED WITH STAINLESS STEEL (TYPE 304 OR 316) AND SHALL BE DESIGNED FOR NO MORE THAN L/360 DEFLECTION UNDER MAXIMUM LOADING CONDITIONS.
20. ALL STRUCTUAL MEMBERS AND CONNECTIONS SHALL HAVE SMOOTH EDGES.
21. A MINIMUM OF 3/16 INCH WELDS SHALL BE USED.
22. ALL TUBE STEEL MEMBERS SHALL HAVE CLOSURE PLATES WITH A SEAL WELD.

PRELIMINARY
95% SUBMITTAL

US Army Corps of Engineers
Seattle District

Symbol	Description	Date	Appr.	Symbol	Description
		/ /			

Date: 16 JUN 08
File #: E-56-14-19
Rev.

Designed by: LP
Drawn by: Autoscan, Inc.
Checked by: LC

U.S.ARMY ENGINEER DISTRICT SEATTLE
CORPS OF ENGINEERS
SEATTLE, WASHINGTON

Prepared by: HDR | FISHPRO

ADDITIONAL WATER STORAGE PROJECT
HOWARD HANSON DAM

HOLDING TANK CROWDER DESIGN CRITERIA

GREEN RIVER WASHINGTON

Plate number: MF15
Sheet of

I:\AECDESIGNS\HHAW\OTHER\HDRINC\2008061F\VHHSM-MF15.DGN
DATE AND TIME PLOTTED: 8/6/2008 3:04:27 PM DESIGN FILE: I:\AE

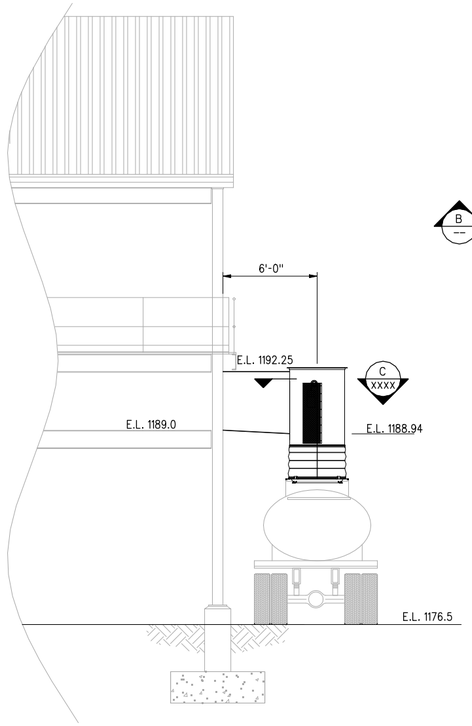

SECTION A

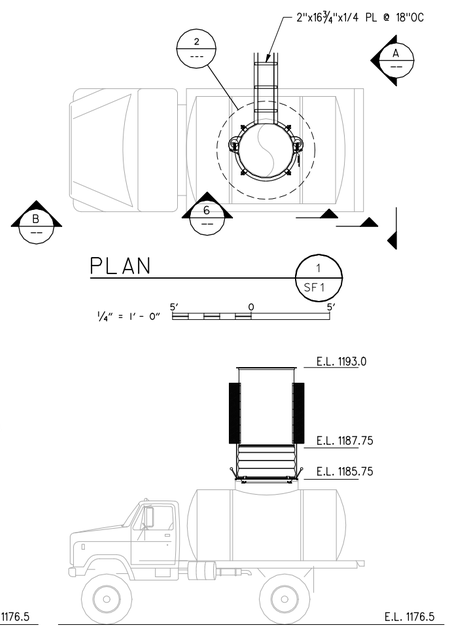

PLAN 1 SF1

1/4" = 1'-0" 5' 0 5'

ELEVATION B

NOTES:
1FISH TRANSFER CHUTE SHALL HAVE A MINIMUM TRAVEL OF 3-FEET

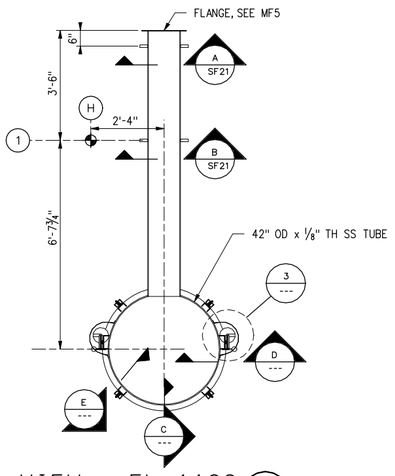

VIEW @ EL 1189 2

½" = 1'-0" 12"6" 0 1' 2' 3' 4' 5'

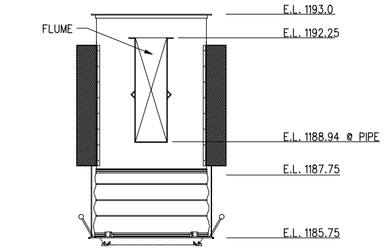

DETAIL 6

½" = 1'-0" 12"6" 0 1' 2' 3' 4' 5'

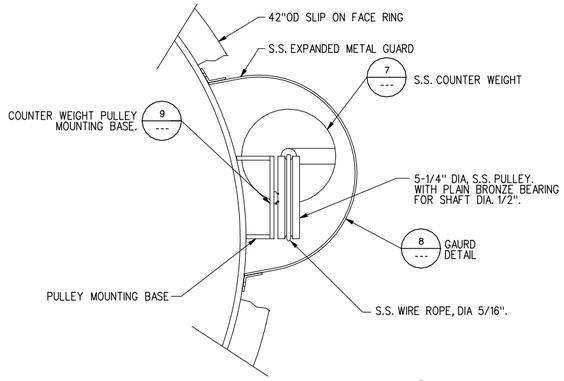

DETAIL 3

3" = 1'-0" 1" 0 3" 6" 9" 12"

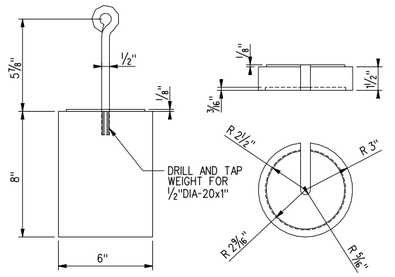

NOTES:
1. COUNTER WEIGHT TO BE CONSTRUCTED OF S.S.
2. THREE (3) SLIP ON WEIGHTS ARE REQUIRED.

DETAIL 7
COUNTER WEIGHT

3" = 1'-0" 1" 0 3" 6" 9" 12"

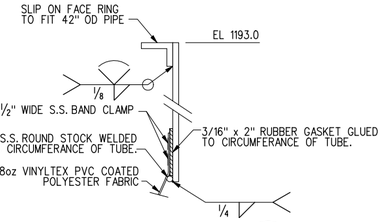

SECTION C

3" = 1'-0" 1" 0 3" 6" 9" 12"

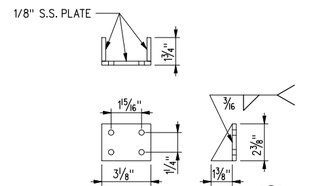

DETAIL 4
TOGGLE CLAMP BASE

3" = 1'-0" 1" 0 3" 6" 9" 12"

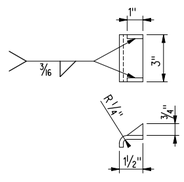

DETAIL 5
TOGGLE CLAMP

3" = 1'-0" 1" 0 3" 6" 9" 12"

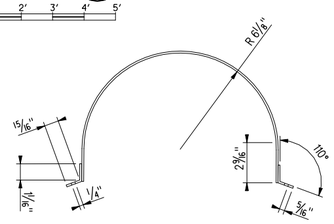

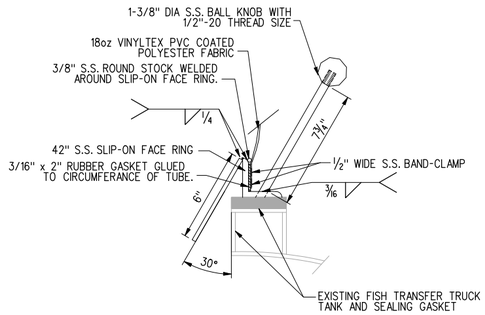

SECTION D

3" = 1'-0" 1" 0 3" 6" 9" 12"

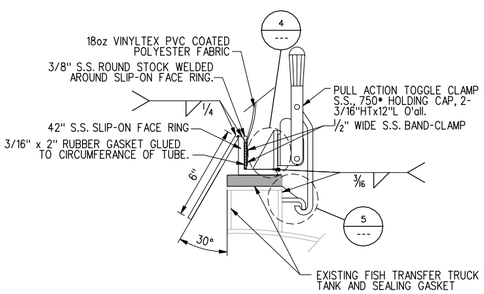

SECTION E

3" = 1'-0" 1" 0 3" 6" 9" 12"

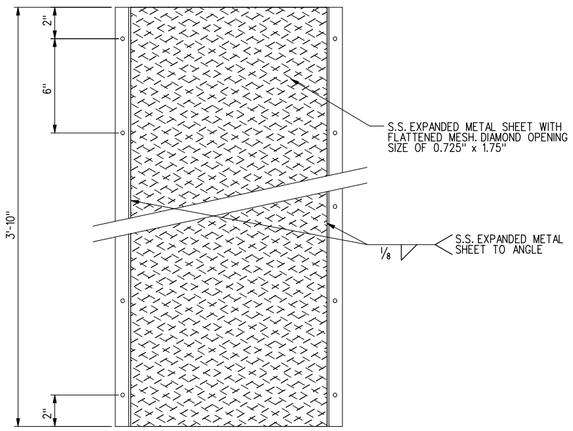

GUARD DETAIL 8

3" = 1'-0" 1" 0 3" 6" 9" 12"

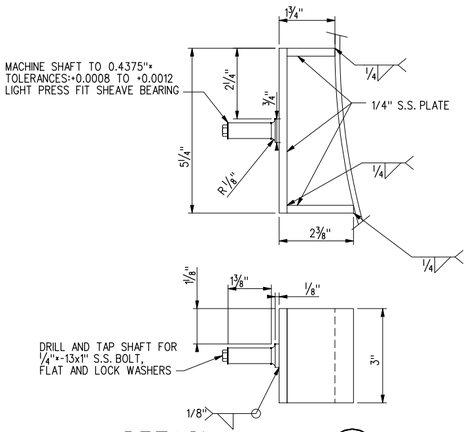

DETAIL 9
PULLEY MOUNTING BASE

6" = 1'-0" 1" 0 3" 6"

PRELIMINARY
95% SUBMITTAL

US Army Corps of Engineers
Seattle District

Symbol	Description	Appr.	Date
		/	/

Designed by: LP
Drawn by: Autoscon, Inc.
Checked by: LC
Date: 16 JUN 08
File • E-56-14-19
Rev.

U.S.ARMY ENGINEER DISTRICT SEATTLE
CORPS OF ENGINEERS
SEATTLE, WASHINGTON
Prepared by: HDR | FISHPRO

ADDITIONAL WATER STORAGE PROJECT
HOWARD HANSON DAM
GREEN RIVER WASHINGTON

TRUCK TANK DOCKING STATION PLAN, SECTIONS AND DETAILS

Plate number: MF16
Sheet of

DATE AND TIME PLOTTED: 8/6/2008 3:04:30 PM DESIGN FILE: I:\AECDESIGNS\HHAM\OTHER\HDRINC\2008061F\VHSM-MF16.DGN

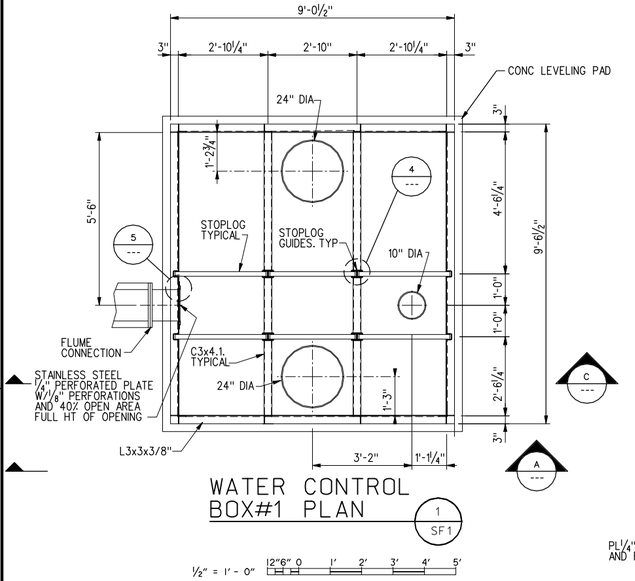

WATER CONTROL BOX#1 PLAN (1 SF1)

½" = 1'-0" 12"6" 0 1' 2' 3' 4' 5'

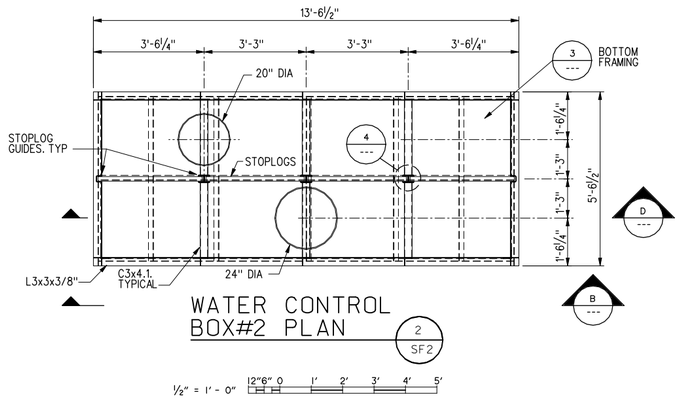

WATER CONTROL BOX#2 PLAN (2 SF2)

½" = 1'-0" 12"6" 0 1' 2' 3' 4' 5'

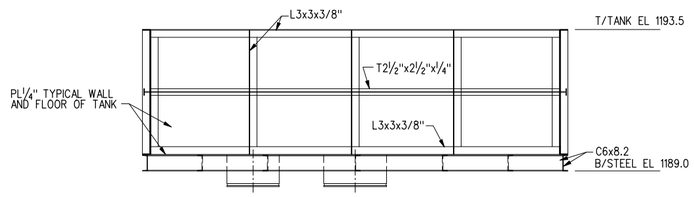

ELEVATION (B)

½" = 1'-0" 12"6" 0 1' 2' 3' 4' 5'

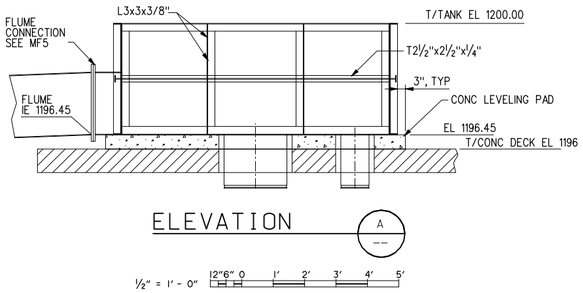

ELEVATION (A)

½" = 1'-0" 12"6" 0 1' 2' 3' 4' 5'

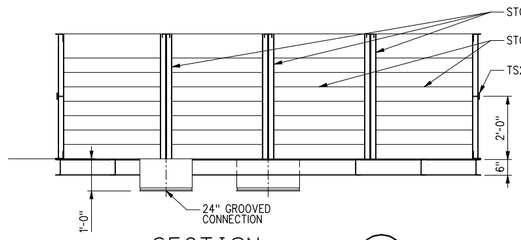

SECTION (D)

½" = 1'-0" 12"6" 0 1' 2' 3' 4' 5'

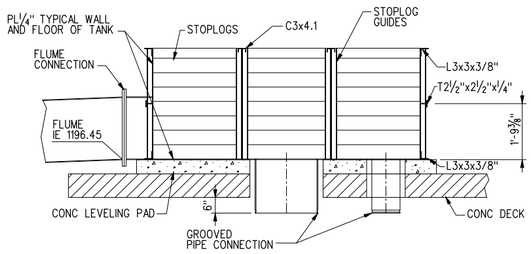

SECTION (C)

½" = 1'-0" 12"6" 0 1' 2' 3' 4' 5'

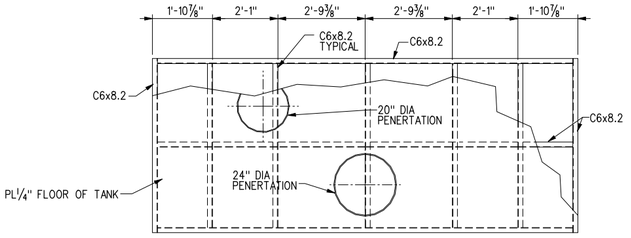

BOTTOM FRAMING (3)

½" = 1'-0" 12"6" 0 1' 2' 3' 4' 5'

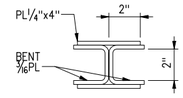

STOPLOG GUIDE (4)

3" = 1'-0" 1" 0 3" 6" 9" 12"

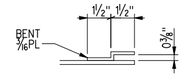

SCREEN GUIDE (5)

3" = 1'-0" 1" 0 3" 6" 9" 12"

PRELIMINARY 95% SUBMITTAL

US Army Corps of Engineers
Seattle District

Symbol	Description	Date	Appr.	Symbol	Description
		/ /			

Date: 16 JUN 08
File #: E-56-14-19
Rev.

Designed by: LP
Drawn by: Autoscan, Inc.
Checked by: LC

U.S.ARMY ENGINEER DISTRICT,SEATTLE
CORPS OF ENGINEERS
SEATTLE, WASHINGTON

Prepared by: HDR | FISHPRO

ADDITIONAL WATER STORAGE PROJECT
HOWARD HANSON DAM
WATER CONTROL STRUCTURE PLANS, SECTIONS AND DETAILS
GREEN RIVER WASHINGTON

Plate number: MF17
Sheet of

DATE AND TIME PLOTTED: 8/6/2008 3:04:39 PM DESIGN FILE: I:\AECDESIGNS\HHAM\OTHER\HDRINC\2008061F\VHHSM-MF17.DGN

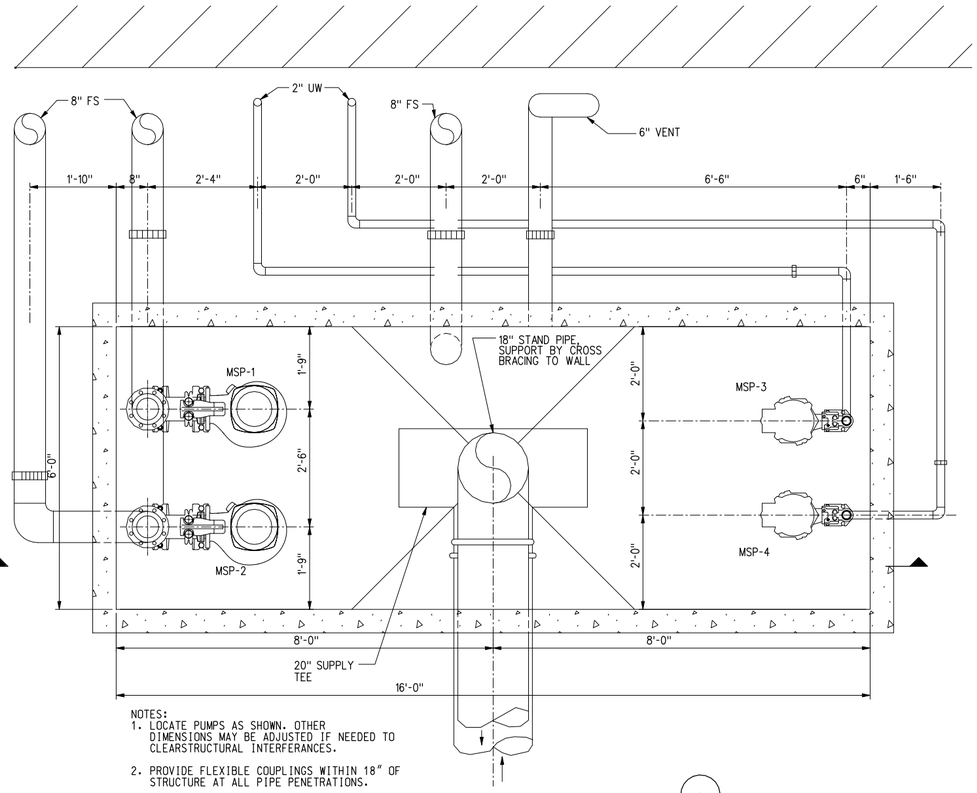

NOTES:
1. LOCATE PUMPS AS SHOWN. OTHER DIMENSIONS MAY BE ADJUSTED IF NEEDED TO CLEARSTRUCTURAL INTERFERANCES.
2. PROVIDE FLEXIBLE COUPLINGS WITHIN 18" OF STRUCTURE AT ALL PIPE PENETRATIONS.

MONITORING STATION
PUMP STATION
1
SF1

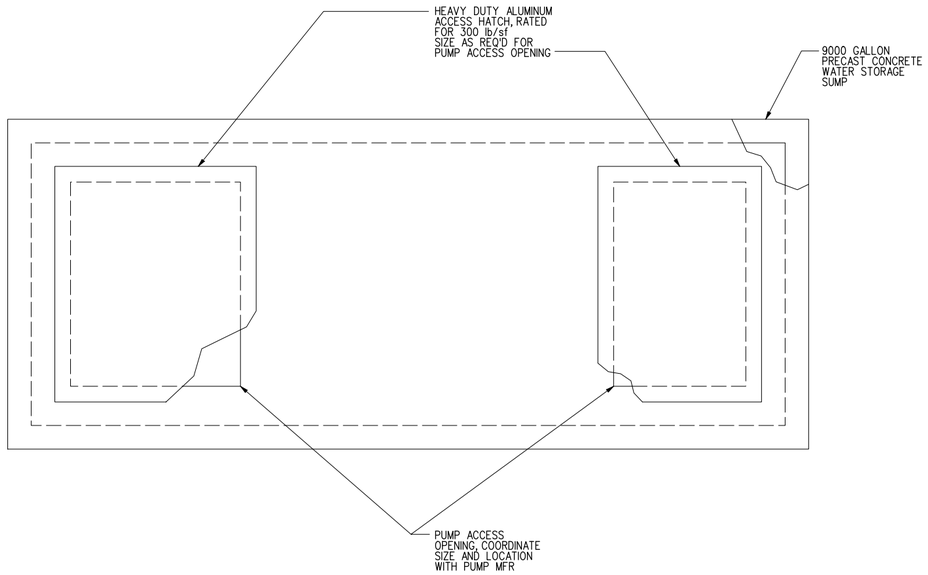

MONITORING STATION
PUMP VAULT
2
--

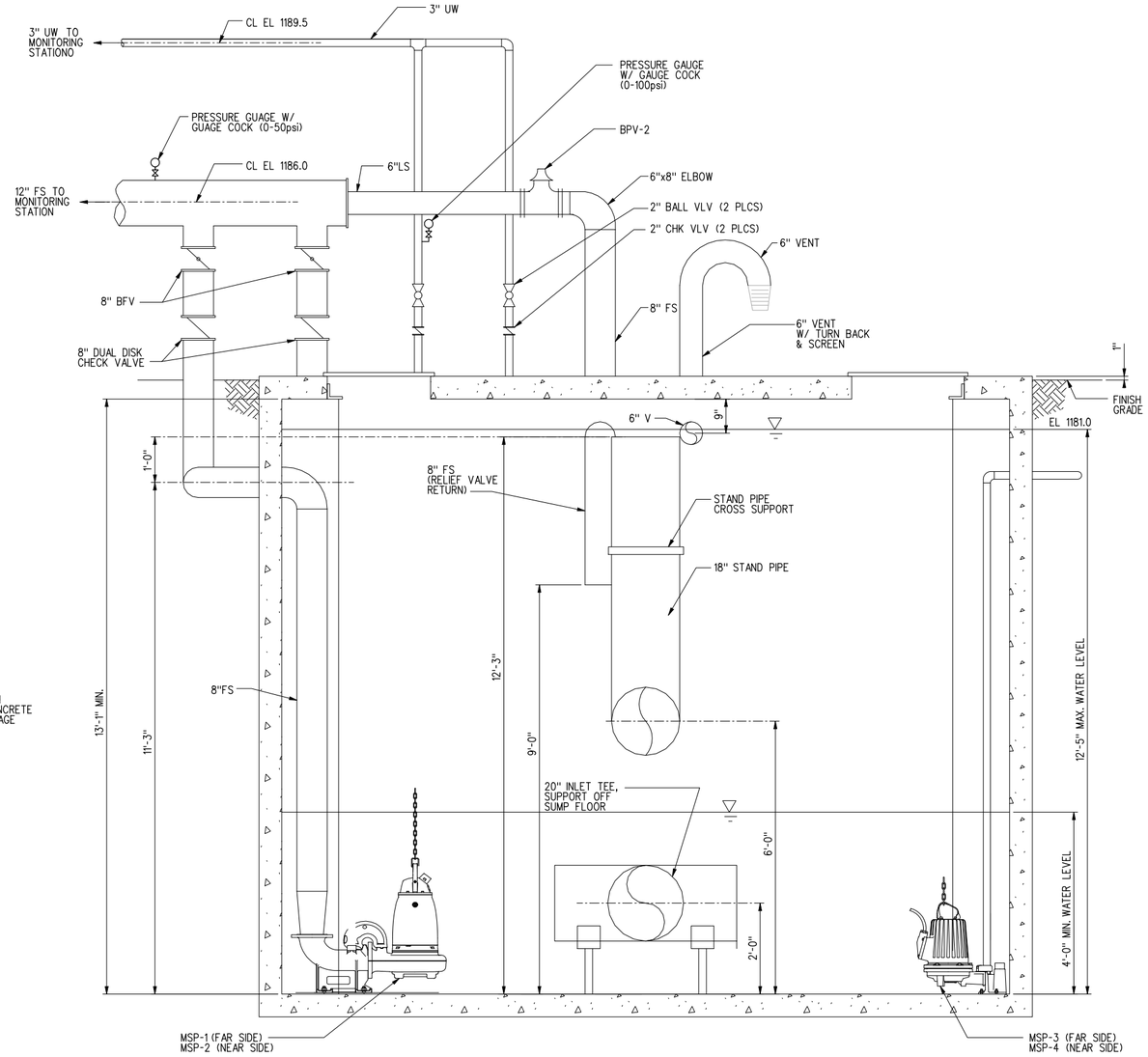

NOTES:
1. PUMP MFR TO PROVIDE RAIL MOUNTING HARDWARE FOR PUMPS.
2. CONTRACTOR TO PROVIDE 1/2" GALVANIZED LIFTING CHAIN AND STAINLESS STEEL RAILS FOR EACH PUMP.

MONITORING STATION
SECTION
A
--

3/4" = 1' - 0" 12" 6" 0 1' 2' 3'

PRELIMINARY
95% SUBMITTAL

US Army Corps of Engineers
Seattle District

Symbol	Description	Date	Appr.	Symbol	Description

Designed by: LP
Drawn by: Autoscan, Inc.
Checked by: LC
Date: 16 JUN 08
File #: E-56-14-19
Rev.

U.S. ARMY ENGINEER DISTRICT, SEATTLE
CORPS OF ENGINEERS
SEATTLE, WASHINGTON

Prepared by: HDR | FISHPRO

ADDITIONAL WATER STORAGE PROJECT
HOWARD HANSON DAM
MONITORING FACILITY
PUMP VAULT PLANS
AND SECTIONS
GREEN RIVER WASHINGTON

Plate number:
MF18
Sheet of

DATE AND TIME PLOTTED: 8/6/2008 3:04:41 PM DESIGN FILE: I:\AECDESIGNS\HHAW\OTHER\HDRINC\20080619\HHSM-MF18.DGN

LEGEND

AD	ANESTHETIC DRAIN PIPING
AS	ANESTHETIC SUPPLY PIPING
FS	FLUME SUPPLY PIPING
LS	LIFE SUPPORT PIPING
UW	UTILITY WATER SUPPLY PIPING
D	DRAIN PIPING
	TRANSFER FLUMES
WSV-X	WATER SUPPLY VALVE
BV-X	FLOW BALANCE VALVE
	MANUALLY OPERATED VALVE
	CHECK VALVE
BPV-X	BACK PRESSURE MAINTAINING VALVE
PRV-X	PRESSURE REGULATING VALVE
NC	NORMALLY CLOSED
DV-X	DRAIN VALVE
PV-X	PRESSURE VESSEL
M	FLOW METER
	PRESSURE GAUGE
PS	PRESSURE SWITCH
FS	FLOW SWITCH
MG	MANUALLY OPERATED GATE
WCG-X	WATER CONTROL GATE
DG-X	DIVERTER GATE
	OVERFLOW WEIR
LS	LEVEL SENSOR
MSP-X	MONITORING FACILITY PUMP
SP	OVERFLOW STAND PIPE
	HOSE BIB OR HYDRANT

ROUTE TO WET WELL

TOWER ROOM AT ELEV 1204

PV-1

PRV-1

BPV-1

MONITORING FACILITY PUMP VAULT

MSP-4

MSP-3

MSP-2

MSP-1

TOWER ROOM AT ELEV 1194

WORKUP TABLE

RECOVERY TANK

ANESTHESIA TANK

BPV-4

BPV-2

MSP-5

ANESTHESIA CIRCULATION TANK

FROM LOWER LEVEL PUMP SUPPLY SYSTEM

TO ANESTHETIC DRAIN SYSTEM

FISH HOPPER

DOCKING STATION

WCG-1

BV-1

WSV-1

WSV-2

FUTURE PIT TAG READER

DG-1

WSV-3

BV-2

WSV-5

BV-4

WSV-6

BV-5

CONNECT TO GRADER WETTING WATER SPRAY DISTRIBUTION MANIFOLD

INLINE FISH GRADER

WATER CONTROL BOX 1

WSV-4

BV-3

FUTURE PIT TAG READER

DV-1 DV-2 DV-3 DV-4 DV-5

WCG-2 WCG-3 WCG-4 WCG-5 WCG-6

HOLDING TANK 5 HOLDING TANK 4 HOLDING TANK 3 HOLDING TANK 2 HOLDING TANK 1

DG-2 DG-3 DG-4

DG-5 DG-6 DG-7 DG-8 DG-9

HOLDING TANK 7 HOLDING TANK 8

WCG-7 WCG-8

DV-6 DV-7

BPV-3

WSV-7

WSV-8 BV-6

HOSE CONNECTION TO TRUCK TANK DRAIN

CONNECTED TO GRADER WETTING WATER SPRAY DISTRIBUTION MANIFOLD (4 PLCS)

WATER CONTROL BOX 2

MONITORING STATION PROCESS FLOW DIAGRAM

PRELIMINARY 95% SUBMITTAL

US Army Corps of Engineers
Seattle District

Symbol	Description	Appr.	Date
			/ /

Date: 16 JUN 08
File # E-56-14-19
Rev.
Designed by: LP
Drawn by: Autoscon, Inc.
Checked by: LC

U.S.ARMY ENGINEER DISTRICT SEATTLE
CORPS OF ENGINEERS
SEATTLE, WASHINGTON
Prepared by: HDR | FISHPRO

ADDITIONAL WATER STORAGE PROJECT
HOWARD HANSON DAM
MONITORING FACILITY PROCESS FLOW DIAGRAM
GREEN RIVER WASHINGTON

Plate number: MF 19
Sheet of

DATE AND TIME PLOTTED: 8/6/2008 3:04:49 PM DESIGN FILE: I:\AECDESIGNS\HHW\OTHER\HDRINC\2008061F\VHSM-MF19.DGN

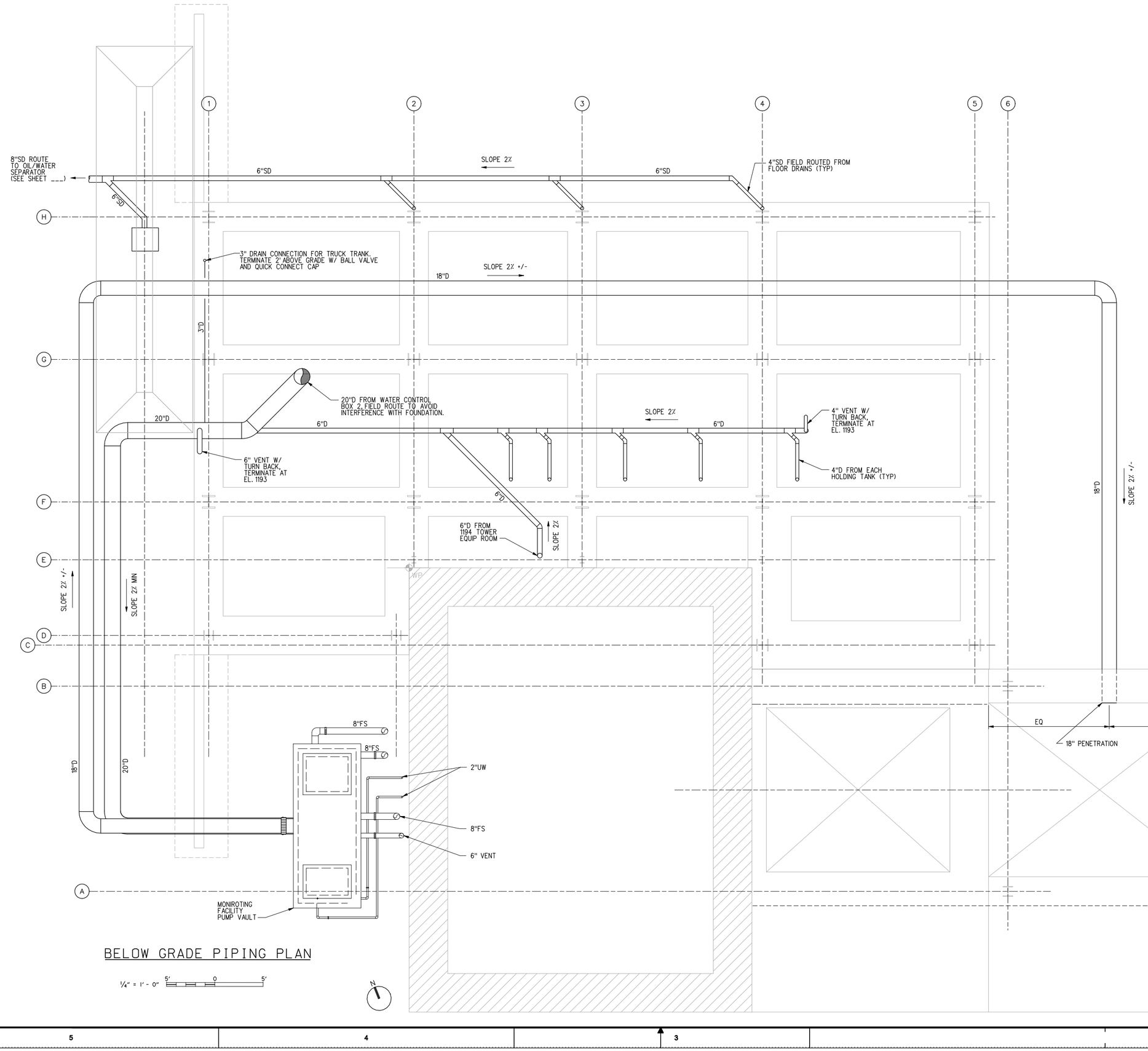

BELOW GRADE PIPING PLAN

1/4" = 1' - 0" 5' 0 5'

PRELIMINARY
95% SUBMITTAL

US Army Corps of Engineers
Seattle District

Symbol	Description	Date	Appr.	Symbol	Description
		/ /			

Designed by: LP
Drawn by: Autoscan, Inc.
Checked by: LC
Date: 16 JUN 08
File: E-56-14-19
Rev.

U.S.ARMY ENGINEER DISTRICT,SEATTLE
CORPS OF ENGINEERS
SEATTLE, WASHINGTON

Prepared by: HDR | FISHPRO

ADDITIONAL WATER STORAGE PROJECT
HOWARD HANSON DAM
GREEN RIVER WASHINGTON

MONITORING FACILITY BELOW GRADE PIPING PLAN

Plate number: MF 20
Sheet of

DATE AND TIME PLOTTED: 8/6/2008 3:04:52 PM DESIGN FILE: I:\AECDESIGNS\HHAA\OTHER\HDRINC\2008061\$\HHSM-MF20.DGN

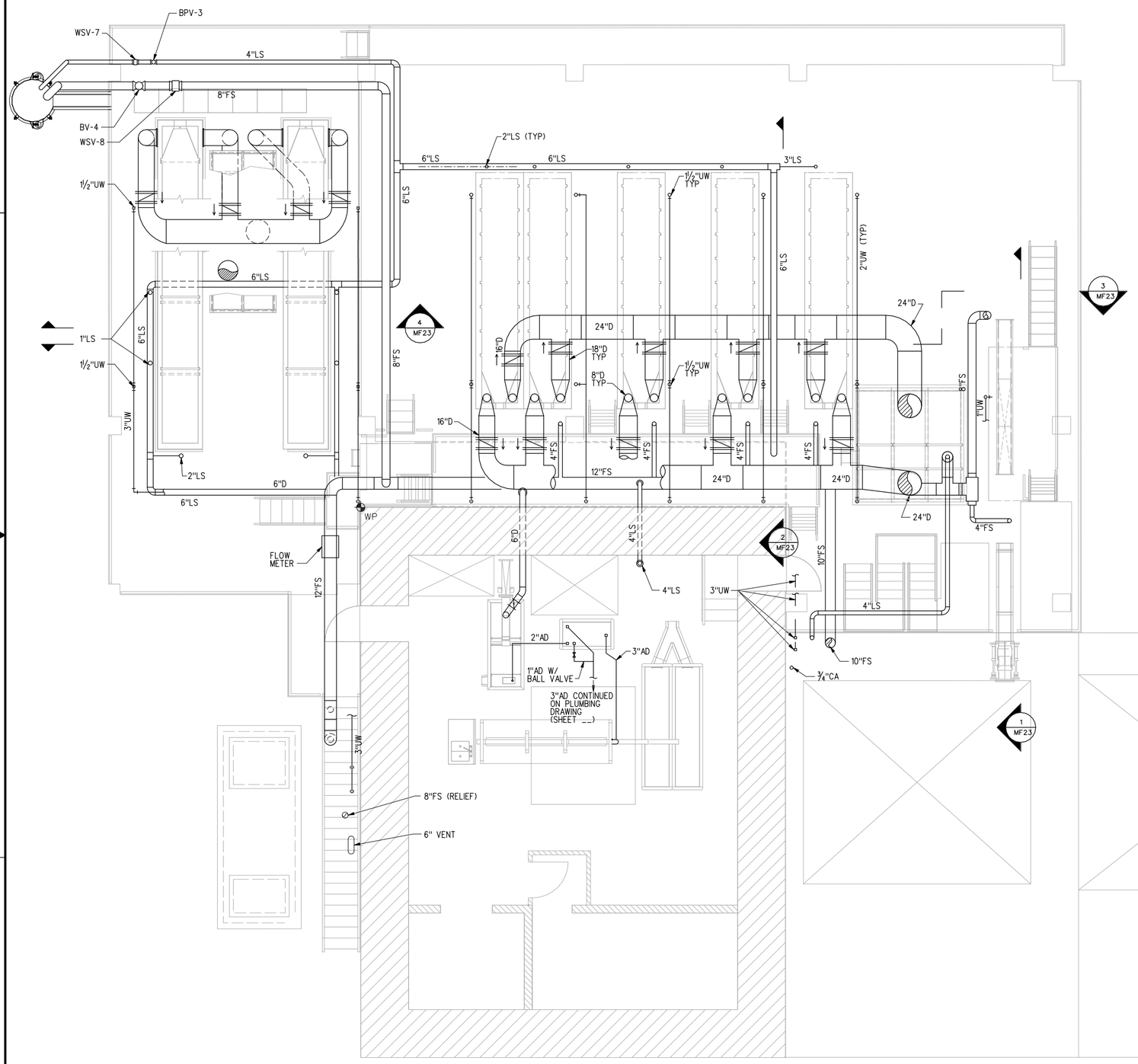

BELOW EL 1196 PIPING PLAN

¼" = 1'-0" 5' 0 5'

NOTES:

1. PIPE ROUTING IS APPROXIMATE AND MAY BE ADJUSTED TO CLEAR STRUCTURAL INTERFERENCES.
2. LOCATIONS OF PIPE PENETRATIONS THROUGH DECKS AND PLATFORMS SHALL BE COORDINATED BY CONTRACTOR. WHERE POSSIBLE PIPING MAY BE FIELD ROUTED WITH ENGINEER APPROVAL TO AVOID INTERFERENCES.
3. DECKING SLAB DRAINS NOT SHOWN. SLAB DRAINS SHALL BE FIELD ROUTED FROM DRAIN LOCATIONS ON THE DECKING TO THE NORTH PERIMETER OF THE DECK. UP TO (3) DECK DRAINS MAY BE ROUTED TO A 4" MAIN DRAIN. THE MINIMUM SLAB DRAIN SIZE AND THE PIPING CONNECTING THE SLAB DRAINS TO THE 4" MAIN PIPING SHALL BE 3". ALL SLAB DRAIN PIPING SHALL SLOPE CONTINUOUSLY TOWARD DISCHARGE AT A MINIMUM SLOPE OF ¼" PER FOOT.
4. PIPING SHALL BE SUPPORTED WITH LATERALLY BRACED TRAPESE SUPPORTS HUNG FROM STRUCTURE MEMBERS UNDER THE DECK, FROM STANTION SUPPORTS OR FORM CONCRETE WALLS UNLESS APPROVED OTHERWISE. PIPING 12" AND LRGER SHALL BE SUPPORTED WITH A MINIMUM SPACING OF ___. PIPING RANGING FROM 4" TO 10" SHALL BE SUPPORTED WITH AMINIMUM SPACING OF ____. PIPING SMALLER THAN 4" SHALL BE SUPPORTED WITH A MINIMUM SPACING OF ___.

PRELIMINARY
95% SUBMITTAL

US Army Corps of Engineers
Seattle District

Symbol	Description	Date	Appr.	Symbol	Description
		/ /			

Date: 16 JUN 08
File • E-56-14-19
Rev.

Designed by: LP
Drawn by: Autoscon, Inc.
Checked by: LC

U.S.ARMY ENGINEER DISTRICT,SEATTLE
CORPS OF ENGINEERS
SEATTLE, WASHINGTON

Prepared by: HDR | FISHPRO

ADDITIONAL WATER STORAGE PROJECT
HOWARD HANSON DAM
GREEN RIVER WASHINGTON

MONITORING FACILITY BELOW EL 1196 PIPING PLAN

Plate number: MF 21
Sheet of

DATE AND TIME PLOTTED: 8/6/2008 3:04:54 PM DESIGN FILE: I:\AECDESIGNS\WHAA\OTHER\HDRINC\20080861\WHSM-MF21.DGN

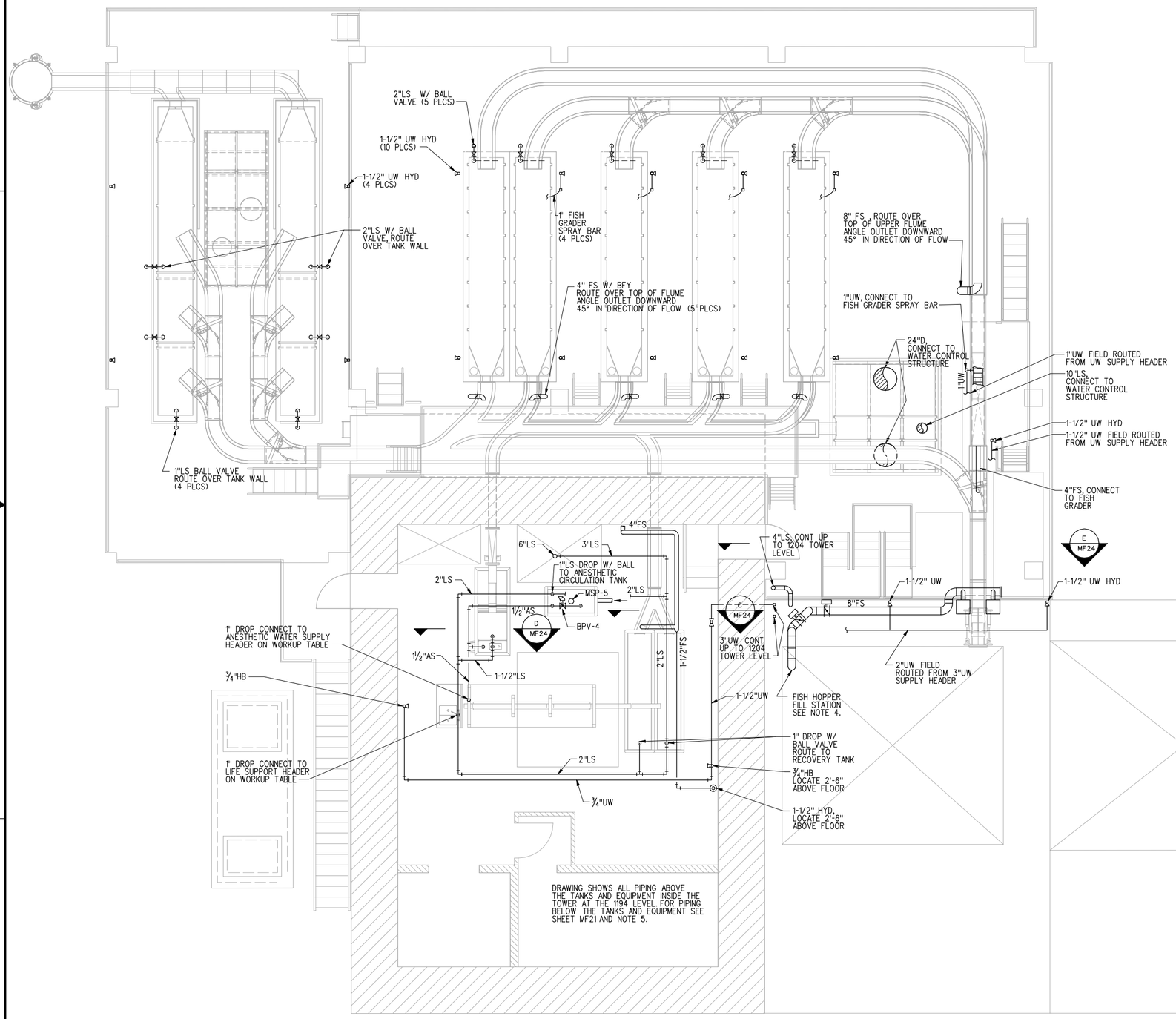

NOTES:

1. PIPE ROUTING IS APPROXIMATE AND MAY BE ADJUSTED TO CLEAR STRUCTURAL INTERFERENCES.
2. LOCATIONS OF PIPE PENETRATIONS THROUGH DECKS AND PLATFORMS SHALL BE COORDINATED BY CONTRACTOR. WHERE POSSIBLE PIPING MAY BE FIELD ROUTED WITH ENGINEER APPROVAL TO AVOID INTERFERENCES.
3. PIPE PENETRATIONS THROUGH GRATING SHALL BE DONE THROUGH BANDED OPENINGS. PIPE PENETRATIONS THROUGH THE CONCRETE DECK SHALL BE AS SHOWN IN DETAIL ___.
4. PIPING AT THE FISH HOPPER FILL STATIONSHALL BE ROUTED OVER THE TOP OF THE HOPPER STRUCTURE TO DISCHARGE INTO THE HOPPER HOLDING AREA. ROUTING SHALL BE COORDINATED WITH, AND SUPPORTED OFF OF STRUCTURAL COLUMNS, GIRTERS AND JOISTS. ROUTING SHALL ALLOW THE FISAH HOPPER TO RAISE TO FULL HEIGHT, AND FILLING OF HOPPER EWLL WHILE FISH HOPPER IS DOCKED.
5. DOMESTIC WATER (HOT AND COLD POTABLE WATER) TO SINK INSIDE THE 1194.0 ELEVATION TOWER LEVEL NOT SHOWN. REFER TO PLUMBING DRAWINGS (SHEET ___) FOR THIS PIPING

PRELIMINARY
95% SUBMITTAL

US Army Corps of Engineers
Seattle District

Symbol	Description	Appr.	Date
			/ /

Designed by: LP
Drawn by: Autoscan, Inc.
Checked by: LC
Date: 16 JUN 08
File: E-56-14-19
Rev.

U.S.ARMY ENGINEER DISTRICT,SEATTLE
CORPS OF ENGINEERS
SEATTLE, WASHINGTON
Prepared by: HDR | FISHPRO

ADDITIONAL WATER STORAGE PROJECT
HOWARD HANSON DAM
GREEN RIVER WASHINGTON

MONITORING FACILITY ABOVE EL 1196 PIPING PLAN

Plate number: MF22
Sheet of

DATE AND TIME PLOTTED: 8/6/2008 3:05:03 PM DESIGN FILE: I:\AECDESIGNS\HHAA\OTHER\HDRINC\20080619\VHHSM-MF22.DGN

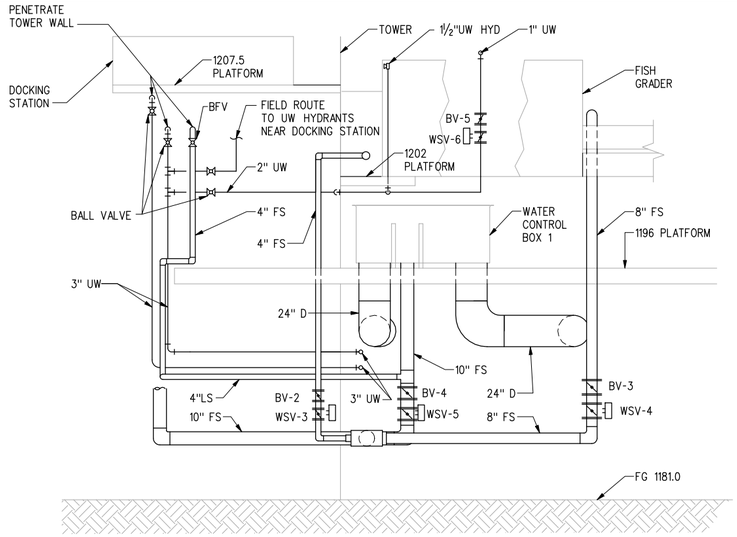

SECTION 1 / MF21

¼" = 1'-0" 5' 0 5'

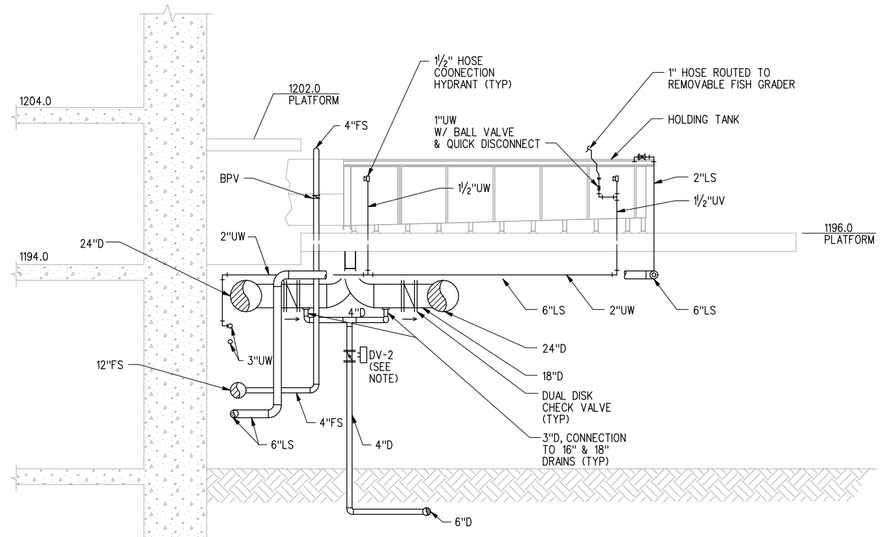

SECTION 2 / MF21

¼" = 1'-0" 5' 0 5'

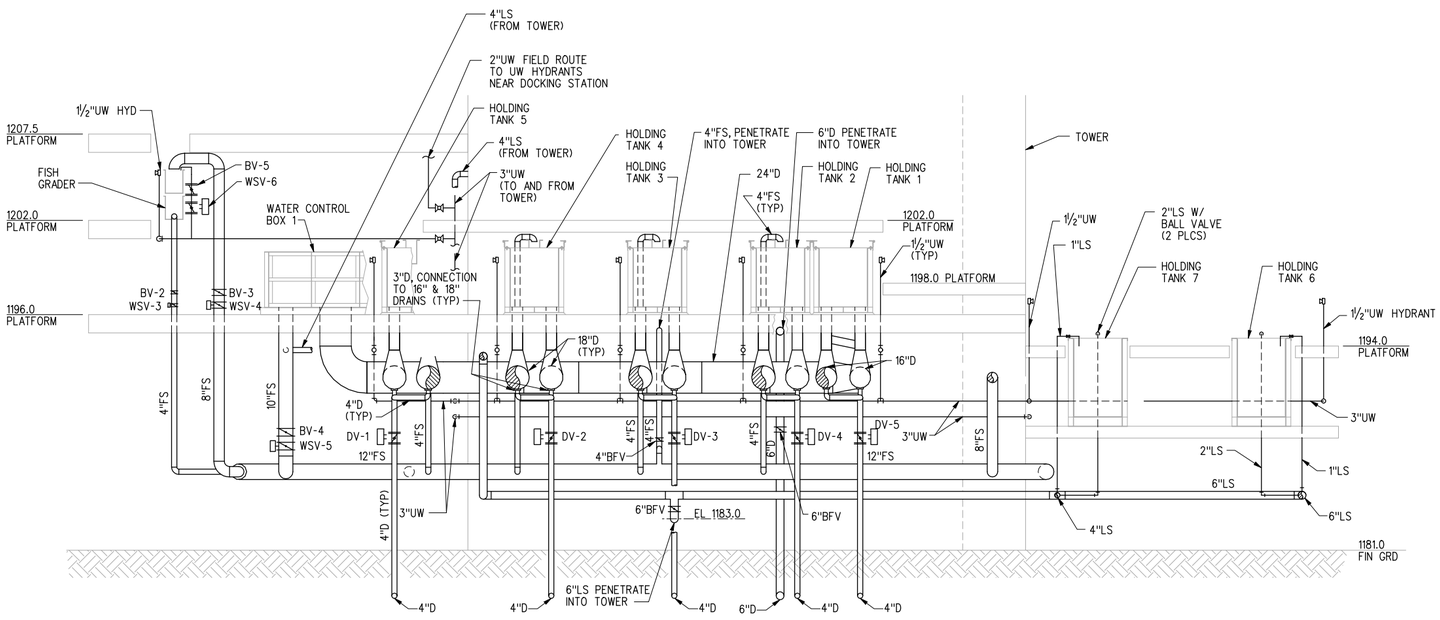

SECTION 3 / MF21

¼" = 1'-0" 5' 0 5'

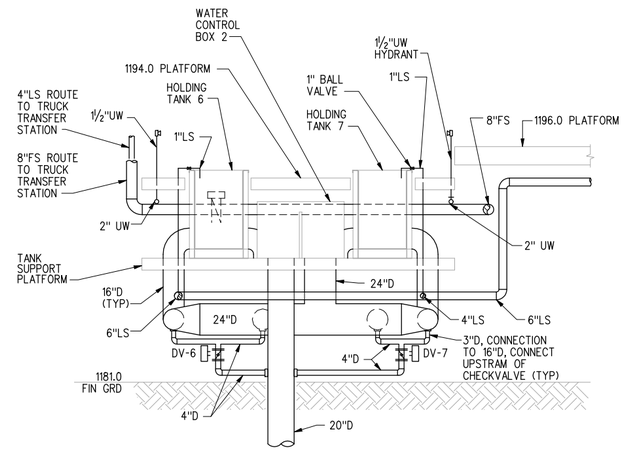

SECTION 4 / MF21

¼" = 1'-0" 5' 0 5'

PRELIMINARY
95% SUBMITTAL

US Army Corps of Engineers
Seattle District

Symbol	Description	Appr.	Date
			/ /

Designed by: LP
Drawn by: Autoscan, Inc.
Checked by: LC
Date: 16 JUN 08
File • E-56-14-19
Rev.

U.S. ARMY ENGINEER DISTRICT, SEATTLE
CORPS OF ENGINEERS
SEATTLE, WASHINGTON

Prepared by: HDR | FISHPRO

ADDITIONAL WATER STORAGE PROJECT
HOWARD HANSON DAM
GREEN RIVER WASHINGTON

PIPING SECTIONS

Plate number: MF23
Sheet of

DATE AND TIME PLOTTED: 8/6/2008 3:05:12 PM DESIGN FILE: I:\AECDESIGNS\HHAW\OTHER\HDRINC\2008061\SHSM-MF23.DGN

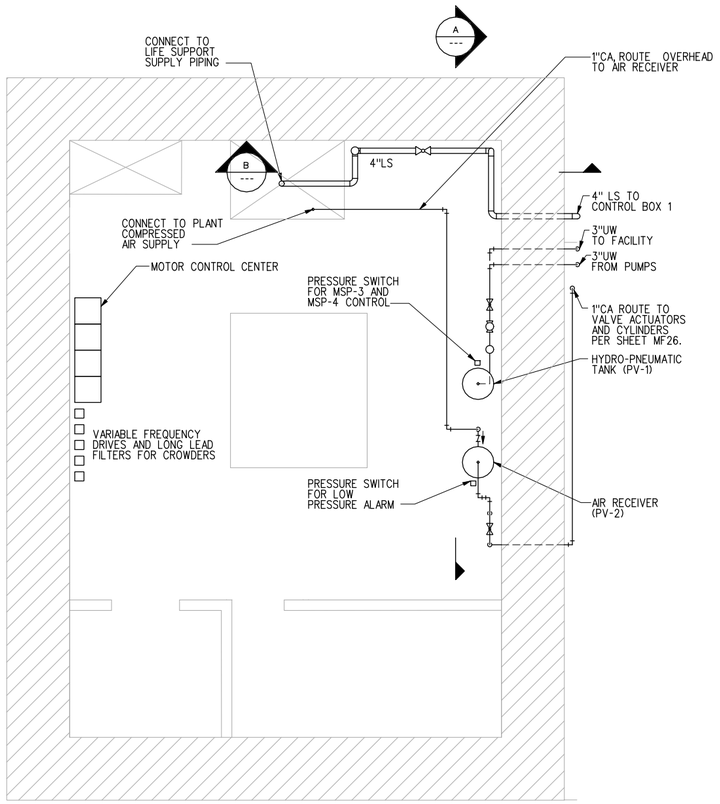

PLAN @ EL 1204.0

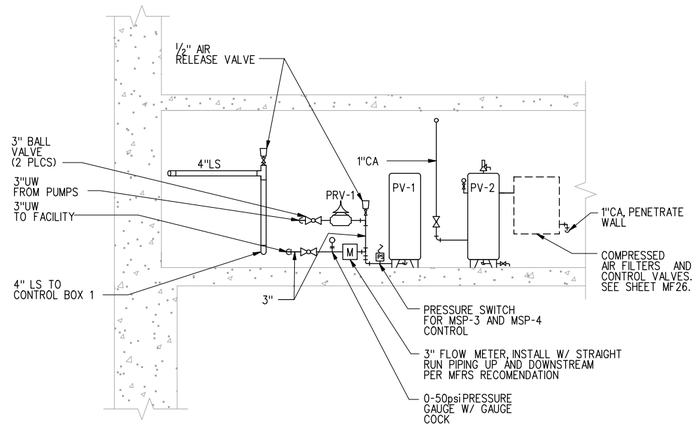

SECTION A

1/4" = 1' - 0" 5' 0 5'

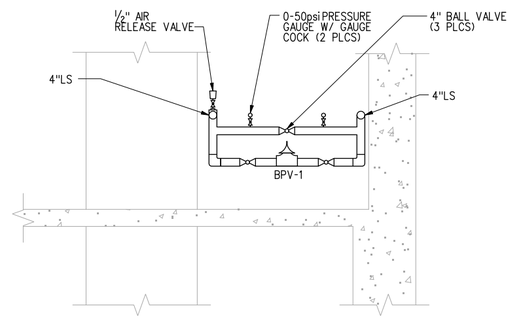

SECTION B

1/4" = 1' - 0" 5' 0 5'

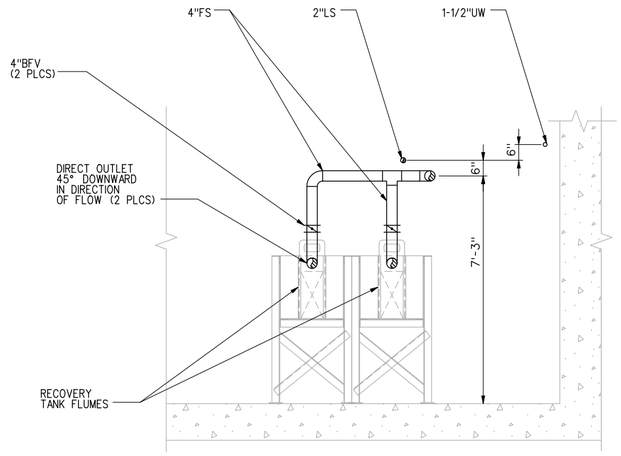

SECTION C
WORKUP ROOM MF22

NOTE:
SUPPORT PIPE HEADERS OF CEILING AND PIPE DROPS OFF TANK OR FLUME WALLS OR LIPS

1/2" = 1' - 0" 12"6" 0 1' 2' 3' 4' 5'

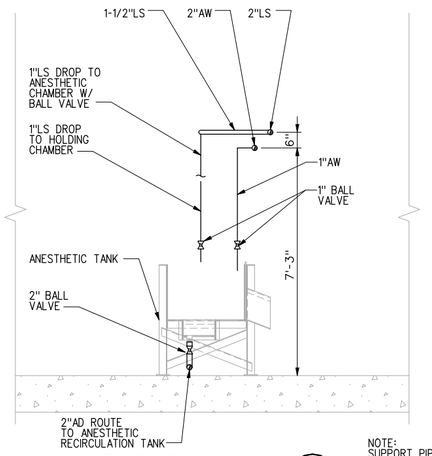

SECTION D
WORKUP ROOM MF22

NOTE:
SUPPORT PIPE HEADERS OF CEILING AND PIPE DROPS OFF TANK WALLS OR LIPS

1/2" = 1' - 0" 12"6" 0 1' 2' 3' 4' 5'

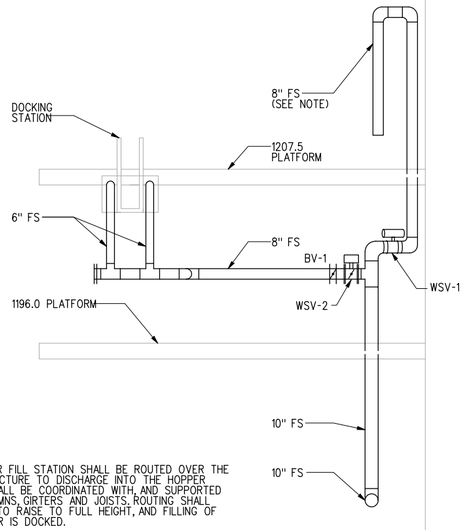

NOTE:
PIPNG AT THE FISH HOPPER FILL STATION SHALL BE ROUTED OVER THE TOP OF THE HOPPER STRUCTURE TO DISCHARGE INTO THE HOPPER HOLDING AREA. ROUTING SHALL BE COORDINATED WITH, AND SUPPORTED OFF OF STRUCTURAL COLUMNS, GIRTERS AND JOISTS. ROUTING SHALL ALLOW THE FISH HOPPER TO RAISE TO FULL HEIGHT, AND FILLING OF HOPPER WHILE FISH HOPPER IS DOCKED.

SECTION E
MF22

1/4" = 1' - 0" 5' 0 5'

PRELIMINARY
95% SUBMITTAL

US Army Corps of Engineers
Seattle District

Symbol	Description	Appr.	Date
			/ /

Designed by: LP
Drawn by: Autoscan, Inc.
Checked by: LC
Date: 16 JUN 08
File #: E-56-14-19
Rev.

U.S.ARMY ENGINEER DISTRICT,SEATTLE
CORPS OF ENGINEERS
SEATTLE, WASHINGTON
Prepared by: HDR | FISHPRO

ADDITIONAL WATER STORAGE PROJECT
HOWARD HANSON DAM
GREEN RIVER WASHINGTON

PIPING
PLANS AND SECTIONS

Plate number:
MF24
Sheet of

DATE AND TIME PLOTTED: 8/6/2008 3:05:15 PM DESIGN FILE: I:\AECDESIGNS\VHHA*\OTHER\HDRINC\2008061F\VHHSM-MF24.DGN

RESERVED

PRELIMINARY
95% SUBMITTAL

US Army Corps of Engineers
Seattle District

Symbol	Description	Date	Appr.
		/ /	

U.S.ARMY ENGINEER DISTRICT,SEATTLE
CORPS OF ENGINEERS
SEATTLE, WASHINGTON

Prepared by: HDR | FISHPRO

Designed by:
Drawn by: Autoscan, Inc.
Checked by:

Date: 16 JUN 08
File • E-56-14-19
Rev.

ADDITIONAL WATER STORAGE PROJECT
HOWARD HANSON DAM

MISCELLANEOUS PIPING SECTIONS AND DETAILS

GREEN RIVER WASHINGTON

Plate number:
MF 25
Sheet of

DATE AND TIME PLOTTED: 8/6/2008 3:05:23 PM DESIGN FILE: I:\AECDESIGNS\HHAW\OTHER\HDRINC\20080619\HHSM-MF25.DGN

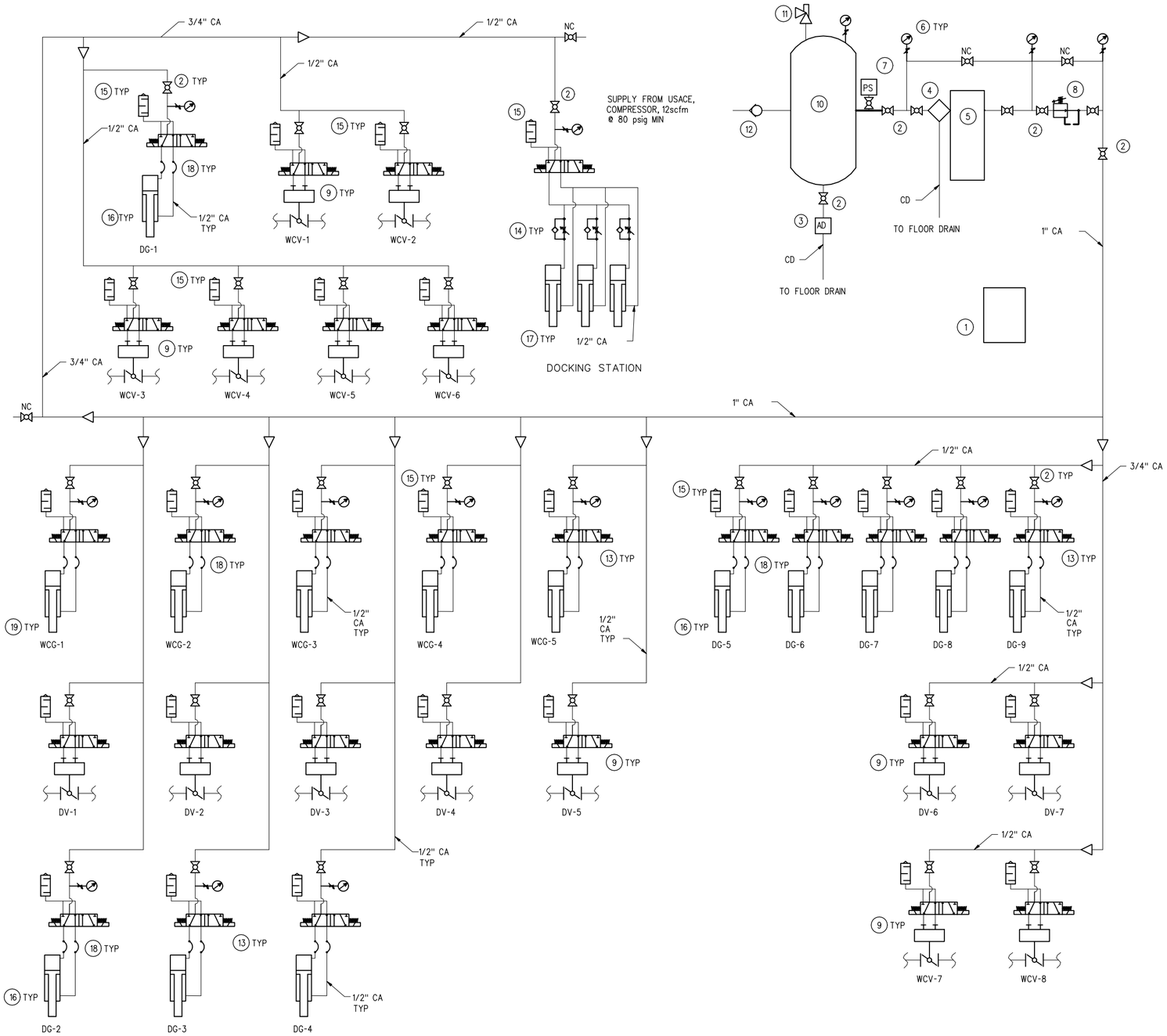

COMPONENT LIST

1. CONTROL PANAL TO OPERATE PNEUMATIC SYSTEM
2. ISOLATION VALVE, SIZE TO MATCH PIPING
3. RECEIVER AUTOMATIC DRAIN
4. SYSTEM PRE-FILTER INTERNAL
5. REFRIGERATED DRYER
6. 0-200 PSI PRESSURE GAUGE w/ GAUGECOCK
7. SYSTEM PRESSURE SWITCH
8. RECEIVER SUPPLY PRESSURE REGULATING VALVE
9. PNEUMATICALY ACTUATED BUTTERFLY VALVE SIZE TO MATCH PIPING
10. 120 GALLON, 200 PSI ASME CODE RECEIVER
11. SYSTEM AIR SAFETY RELIEF VALVE
12. CHECK VALVE
13. PNEUMATIC CONTROL VALVE
14. PNEUMATIC FLOW CONTROL VALVE
15. SYSTEM EXAUST MUFFLER W/ 90-DEG EXHAUST PIPE
16. 3-1/4" S.S. PNEUMATIC CYLINDER W/ 8.5"-STROKE
17. 4" S.S. PNEUMATIC CYLINDER W/ 10" STROKE
18. FLEXIBLE CONNECTION
19. S.S. PNEUMATIC CYLINDER W/ 8"-STROKE. (CYLINDER DIA AS REQUIRED BY GATE MANUFATURER.)

ABBREVIATIONS

AD - AUTOMATIC DRAIN
NC - NORMALLY CLOSED
PS - PRESSURE SWITCH
CA - COMPRESSED AIR PIPING
CD - CONDENSATE DRAIN PIPING
DG - DIVERTER GATE
WCG - WATER CONTROL GATE
WCV - WATER CONTROL VALVE
DV - DRAIN VALVE

PIPING NOTES

1. PROCESS AND INSTRUMENTATION DIAGRAM DOES NOT SHOW ALL EQUIPMENT AND COMPONENTS ASSOCIATED WITH THE PNEUMATIC POWER UNIT. SEE SPECIFICATIONS.
2. PROCESS AND INSTRUMENTATION DIAGRAM DOES NOT SHOW ELECTRICAL REQUIREMENTS OR COMPONENTS ASSOCIATED WITH EQUIPMENT SHOWN. SEE ELECTRICAL DRAWINGS AND SPECIFICATIONS.
3. THE PNEUMATIC SYSTEM P&ID AND MECHANICAL DRAWINGS MAY NOT CALL OUT ALL OF THE FITTINGS, BUSHINGS, PIPING APPURTENANCES AND SUPPORT EQUIPMENT NEEDED FOR THE INSTALLATION. THIS EQUIPMENT SHALL BE INSTALLED WHETHER OR NOT SHOWN ON THE DRAWINGS OR DIAGRAM.
4. WHERE PIPING COMES IN CONTACT WITH DISSIMILAR METAL, ISOLATING MATERIALS SHALL BE USED AT THE CONNECTION TO PREVENT DIRECT CONTACT UNLESS APPROVED BY THE ENGINEER.
5. ALL PIPING SHALL BE CLEANED AND FLUSHED TO REMOVE DIRT AND DEBRIS AFTER ASSEMBLY.
6. PNEUMATICALY OPERATED VALVES SHALL COME WITH SOLENOID VALVES AS A PACKAGE. P&ID IS REPRESENTATIONAL.
7. WHERE THERE ARE LOW POINTS WITHIN THE COMPRESSED AIR SYSTEM A DRAIN VALVE SHALL BE SUPPLIED.
8. AT TERMINALS POINT WITHIN THE COMPRESSED AIR PIPING SYSTEM PROVIDE BLOW DOWN VALVES.

PRELIMINARY
95% SUBMITTAL

US Army Corps of Engineers
Seattle District

Symbol	Description	Date	Appr.	Symbol	Description
		/ /			

Designed by: LP
Drawn by: Autoscan, Inc.
Checked by: LC
Date: 16 JUN 08
File #: E-56-14-19
Rev.

U.S.ARMY ENGINEER DISTRICT,SEATTLE
CORPS OF ENGINEERS
SEATTLE, WASHINGTON

Prepared by: HDR | FISHPRO

ADDITIONAL WATER STORAGE PROJECT
HOWARD HANSON DAM
COMPRESSED AIR SYSTEM P&ID
GREEN RIVER WASHINGTON

Plate number: MF26
Sheet of

DATE AND TIME PLOTTED: 8/6/2008 3:05:35 PM DESIGN FILE: I:\AECDESIGNS\HHAW\OTHER\HDRINC\20080619\HHSM-MF26.DGN

MONITORING STATION PIPING SCHEDULE

FLUID ABBR.	FUNCTION	PIPING MATERIALS (SEE NOTE 1)				FIELD TEST REQUIREMENTS (SEE NOTES 2 AND 3)		
		INDOOR PIPING (SEE NOTES 7 AND 8)		OUTDOOR AND BURIED PIPING (SEE NOTES 7, 8 AND 9)		MINIMUM TEST PRESSURE PSI	TEST MEDIUM	LEAKAGE ALLOWANCE
		2 IN. DIA. AND SMALLER	2-1/2 IN DIA. AND LARGER	2 IN. DIA. AND SMALLER	2-1/2 IN DIA. AND LARGER			
AS	ANESTHETIC SUPPLY	1, 4	1, 4	-	-	20	WATER	NO LEAKAGE ALLOWED
AD	ANESTHETIC DRAIN	1, 5	1, 5	-	-	NOTE 4	WATER	NO LEAKAGE ALLOWED
CA	COMPRESSED AIR	2, 6	2, 6	-	-	200	AIR	NOTE 6
D	DRAIN	-	1, 5	-	1, 3 - NOTE 9	NOTE 4	WATER	NO LEAKAGE ALLOWED
FS	FLUME SUPPLY	1, 4	1, 4		1 - NOTE 9	NOTE 6	WATER	NO LEAKAGE ALLOWED
LS	LIFE SUPPORT	1, 4	1, 4	1 - NOTE 9	1 - NOTE 9	35	WATER	NO LEAKAGE ALLOWED
PHW	POTABLE HOT WATER	6	6	-	-	NOTE 5	WATER	NO LEAKAGE ALLOWED
PCW	POTABLE COLD WATER	6	6	-	-	NOTE 5	WATER	NO LEAKAGE ALLOWED
RD	ROOF DRAIN	-	-	2	2	NOTE 4	WATER	NO LEAKAGE ALLOWED
SD	SLAB DRAIN	-	-	2	2	NOTE 4	WATER	NO LEAKAGE ALLOWED
UW	UTILITY WATER	2, 4	2, 4	2	2	80	WATER	NO LEAKAGE ALLOWED

PIPING MATERIAL SCHEDULE

GROUP NO.	PIPE (SEE NOTES 7 AND 8)	FITTINGS
1	STEEL; BLACK, SCHEDULE 40, ASTM A53	TREADED FITTINGS: 2-1/2 INCH AND SMALLER: MALLEABLE IRON, ANSI B16.3, 150 PSI. THREADED FITTINGS 3 INCH AND LARGER: STEEL ANSI B16.9, 125 PSI. FITTINGS LARGER THAN 4 INCH SHALL BE BUTT WELDED OR FLANGED BLACK STEEL
2	STEEL; GALVANIZED, SCHEDULE 40, ASTM A53	TREADED FITTINGS: 2-1/2 INCH AND SMALLER: MALLEABLE IRON, ANSI B16.3, 150 PSI. THREADED FITTINGS 3 INCH AND LARGER: STEEL ANSI B16.9, 125 PSI. ALL FITTINGS TO BE GALVANIZED
3	WELDED STEEL; AWWA C200, 1/4" WALL	WELDED STEEL, AWWA C200
4	POLYVINYL CHLORIDE; SCHEDULE 40, ASTM D1785 AND ASTM D2665.	POLYVINYL CHLORIDE SCHEDULE 40. NORMAL IMPACT, SOCKET SOLVENT WELDED JOINTS ASTM D2467. TRUE UNIONS.
5	POLYVINYL CHLORIDE; SCHEDULE 80, ASTM D1785.	POLYVINYL CHLORIDE SCHEDULE 80. NORMAL IMPACT, TREADED OR FLANGED JOINTS
6	COPPER; ASTM B88, TYPE L, HARD TEMPERED	WROUGHT COPPER OR CAST BRONZE, SEE SPECIFICATIONS.

NOTES

NOTE 1
PIPING SHALL BE AS INDICATED IN SCHEDULE UNLESS OTHERWISE NOTED ON THE DRAWINGS OR IN THE SPECIFICATIONS

NOTE 2
TEST PRESSURE MEASURED AT LOW POINT IN PIPE. FOR FIELD TEST PROCEDURES AND ADDITIONAL TEST REQUIREMENTS, SEE PIPING SECTION OF SPECIFICATIONS.

NOTE 3
ANY DEVIATION FROM THE PIPING MATERIALS OR FIELD TEST REQUIREMENTS SHOWN WILL BE NOTED IN THE SPECIFICATIONS OR ON THE DRAWINGS.

NOTE 4
STATIC WATER TEST WITH WATER SURFACE 10 FEET ABOVE FLOOR OR FINISHED GRADE

NOTE 5
INSPECTION AND TESTING SHALL BE IN ACCORDANCE WITH APPLICABLE PLUMBING CODE.

NOTE 6
TEST PIPING WITH A SOAPY WATER SOLUTION APPLIED TO JOINTS AND FITTINGS. PRESSURE SHALL BE HELD FOR 2 HOURS. NO EVIDENCE OF LEAKAGE AS NOTED BY PRESSURE DROP OR BUBBLES IN THE SOAPY SOLUTION IS PERMITTED.

NOTE 7
FOR PIPE LINING AND COATING, SEE SPECIFICATIONS.

NOTE 8
EXPOSED PIPING SHALL BE PAINTED IN ACCORDANCE WITH SPECIFICATIONS. COLORS TO BE SELECTED BY OWNER.

NOTE 9
HEAT TRACE AND INSULATE OUTDOOR EXPOSED PIPING AND BURIED PIPING WITH LESS THAN 2.5 FEET OF COVER. SEE HEAT TRACE SCHEDUL AND SPECIFICATIONS FOR HEAT TRACE AND INSULATION REQUIREMENTS.

PRELIMINARY
95% SUBMITTAL

US Army Corps of Engineers
Seattle District

Symbol	Description	Appr.	Date
			/ /

Designed by: LP
Drawn by: Autoscan, Inc.
Checked by: LC
Date: 16 JUN 08
File • E-56-14-19
Rev.

U.S.ARMY ENGINEER DISTRICT,SEATTLE
CORPS OF ENGINEERS
SEATTLE, WASHINGTON
Prepared by: HDR | FISHPRO

ADDITIONAL WATER STORAGE PROJECT
HOWARD HANSON DAM
PIPING SCHEDULE
GREEN RIVER WASHINGTON

Plate number: MF27
Sheet of

DATE AND TIME PLOTTED: 8/6/2008 3:05:46 PM DESIGN FILE: I:\AECDESIGNS\HHAW\OTHER\HDRINC\20080611\VHSM-MF27.DGN

NOTES:

1. MAXIMUM HOISTING VELOCITY WHILE HOPPER IS SUBMERGED IS4.5FT/MIN. ONCE HOPPER IS FREE OF WHAT VELOCITY CAN THEN INCREASE TO 36FT/MIN. MAXIMUM LOWERING VELOCITY IS 72FT/MIN.
2. THE WEIGHT OF THE HOPPER IS 11-TONS WITH AN ADDITION WATER LOAD OF 4.5-TONS.
3. DRIVE MOTORS SHALL HAVE EMERGENCY HOLD BREAKS ATTACHED.
4. MONITORING OF OVERLOAD SHALL BE DONE BY A LOAD MEASURING BOLD LOCATED ON THE SUPPORTING PLATE FOR THE GEAR BOX.
5. THEHOISTING SYSTEM SHALL HAVE LIMIT SWITCHES TO LIMIT THE TOP AND BOTTOM POSITIONS OF THE HOPPER. THE LIMIT SWITCHES WILL BE FLANGE-MOUNTED ON THE ROPE DRUM'S END SHIELD AND DRIVEN BY THE DRUM JOURNAL.
6. SLACK ROPE SECURITY SHALL BE PROVIDED FOR THE HOISTING SYSTEM.
7. HOISTING EQUIPMENT SHALL HAVE THE CAPABILITY TO BE OPERATED IN EITHER MANUAL OR SEMI-AUTOMATIC MODES. ALL FUNCTION OF THE HOISTING SYSTEM SHALL CONTROLABLE WHILE IN MANUAL MODE.

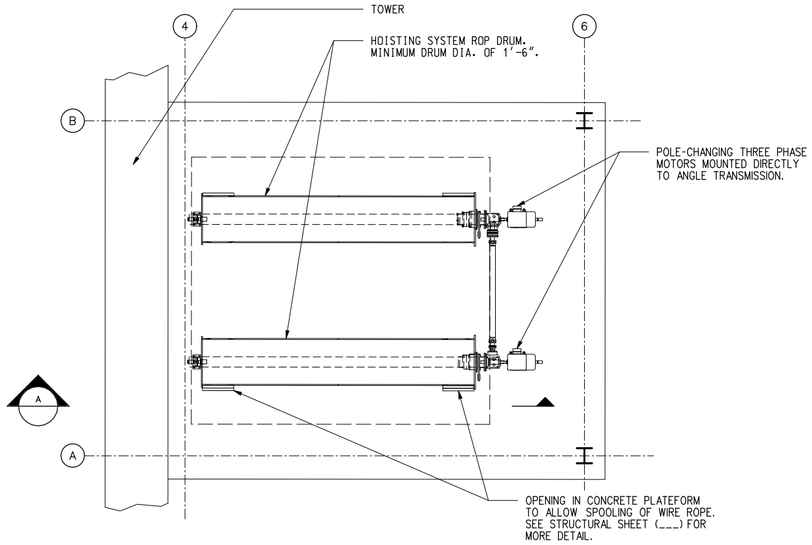

HOISTING PLATEFORM PLAN (1 / SF1)

1/4" = 1'-0" 5' 0 5'

SECTION (A / --)

1/4" = 1'-0" 5' 0 5'

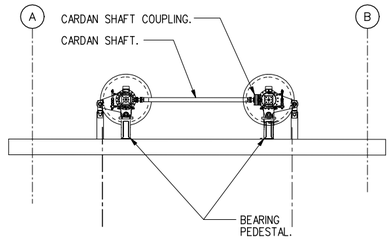

SECTION (B / --)

1/4" = 1'-0" 5' 0 5'

PRELIMINARY
95% SUBMITTAL

US Army Corps of Engineers
Seattle District

Symbol	Description	Date	Appr.	Symbol	Description
		/ /			

Date: 16 JUN 08
File • E-56-14-19
Designed by: LP
Drawn by: Autoscan, Inc.
Checked by: LC
Rev.

U.S. ARMY ENGINEER DISTRICT, SEATTLE
CORPS OF ENGINEERS
SEATTLE, WASHINGTON
Prepared by: HDR | FISHPRO

ADDITIONAL WATER STORAGE PROJECT
HOWARD HANSON DAM
GREEN RIVER WASHINGTON

LIFT HOPPER HOIST DESIGN CRITERIA

Plate number: MF 28
Sheet of

DATE AND TIME PLOTTED: 8/6/2008 3:05:49 PM DESIGN FILE: I:\AECDESIGNS\HHAW\OTHER\HDRINC\2008061\VHHSM-MF28.DGN

MONITORING STATION PUMP SCHEDULE

PUMP NO		MSP-1	MSP-2	MSP-3	MSP-4	MSP-5
SERVICE		FLUME WATER SUPPLY	FLUME WATER SUPPLY	MONITORING STATION UTILITY WATER SUPPLY	MONITORING STATION UTILITY WATER SUPPLY	ANESTHESIA CIRCULATION SYSTEM
PUMP INFORMATION	PUMP TYPE	SUBMERSIBLE	SUBMERSIBLE	SUBMERSIBLE	SUBMERSIBLE	VERTICAL CENTRIFUGAL IMMERSIBLE
	IMPELLER MATERIAL	CAST IRON	CAST IRON	CAST IRON	CAST IRON	CPVC PLASTIC
	DISCHARGE PIPE DIAMETER (IN)	6	6	2	2	1.25
	MOTOR HORSEPOWER	25	25	6	6	0.75
	MOTOR SERVICE FACTOR	1.15	1.15	1.15	1.15	1.15
	MOTOR VOLTAGE	460	460	460	460	115
	MOTOR PHASE	3	3	3	3	1
	RPM	1755	1755	3600	3600	1750
	SHUT OFF HEAD (FT)	105	105	168	168	27.5
	DESIGN FLOW (GM)	1035	1035	75	75	20
	HEAD AT DESIGN FLOW (FT)	62	62	120	120	24
	EFFICIENCY AT DESIGN FLOW	69%	69%	41%	41%	40%
	SECONDARY DESIGN FLOW (GM)	1800	1800	120	120	64
	HEAD AT SECONDARY DESIGN FLOW (FT)	40	40	86	86	12
	EFFICIENCY AT SECONDARY DESIGN FLOW	66%	66%	45%	45%	20%
	MANUFACTURER AND MODEL NO OR EQUIVALENT	FLYGT MODEL NP3153	FLYGT MODEL NP3153	FLYGT MODEL BS2071	FLYGT MODEL BS2071	FILTER PUMP INDUSTRIES P-3/4A-1

MONITORING STATION GATE SCHEDULE

GATE NO	SERVICE	SIZE	GATE TYPE	COMMENTS
WCG-1	FISH HOPPER DOCKING STATION WATER CONTROL	12" WIDE X 8" HIGH	ELECTRICALLY ACTUATED DOWNWARD OPENING GATE	CUSTOM MANUFACTURED FOR APPLICATION, SEE DETAILS
WCG-2	HOLDING TANK 5 TRANSFER GATE	12" WIDE X 8" HIGH	FAST OPENING PNEUMATICALLY ACTUATED UPWARD OPENING GATE	CUSTOM MANUFACTURED FOR APPLICATION, SEE DETAILS
WCG-3	HOLDING TANK 4 TRANSFER GATE	12" WIDE X 8" HIGH	FAST OPENING PNEUMATICALLY ACTUATED UPWARD OPENING GATE	CUSTOM MANUFACTURED FOR APPLICATION, SEE DETAILS
WCG-4	HOLDING TANK 3 TRANSFER GATE	12" WIDE X 8" HIGH	FAST OPENING PNEUMATICALLY ACTUATED UPWARD OPENING GATE	CUSTOM MANUFACTURED FOR APPLICATION, SEE DETAILS
WCG-5	HOLDING TANK 2 TRANSFER GATE	12" WIDE X 8" HIGH	FAST OPENING PNEUMATICALLY ACTUATED UPWARD OPENING GATE	CUSTOM MANUFACTURED FOR APPLICATION, SEE DETAILS
WCG-6	HOLDING TANK 1 TRANSFER GATE	12" WIDE X 8" HIGH	FAST OPENING PNEUMATICALLY ACTUATED UPWARD OPENING GATE	CUSTOM MANUFACTURED FOR APPLICATION, SEE DETAILS
WCG-7	TRUCK TRANSFER HOLDING TANK 7 TRANSFER GATE	12" WIDE X 12" HIGH	ELECTRICALLY ACTUATED UPWARD OPENING GATE	CUSTOM MANUFACTURED FOR APPLICATION, SEE DETAILS
WCG-8	TRUCK TRANSFER HOLDING TANK 6 TRANSFER GATE	12" WIDE X 12" HIGH	ELECTRICALLY ACTUATED UPWARD OPENING GATE	CUSTOM MANUFACTURED FOR APPLICATION, SEE DETAILS
DG-1	HOLDING TANK BYPASS DIVERTER GATE	SEE DETAILS	PNEUMATICALLY ACTUATED - 30 DEGREE DIVERTER GATE	CUSTOM MANUFACTURED FOR APPLICATION, SEE DETAILS
DG-2	HOLDING TANK 5 DIVERTER GATE	SEE DETAILS	PNEUMATICALLY ACTUATED - 45 DEGREE DIVERTER GATE	CUSTOM MANUFACTURED FOR APPLICATION, SEE DETAILS
DG-3	HOLDING TANK 4 DIVERTER GATE	SEE DETAILS	PNEUMATICALLY ACTUATED - 45 DEGREE DIVERTER GATE	CUSTOM MANUFACTURED FOR APPLICATION, SEE DETAILS
DG-4	HOLDING TANK 3 DIVERTER GATE	SEE DETAILS	PNEUMATICALLY ACTUATED - 45 DEGREE DIVERTER GATE	CUSTOM MANUFACTURED FOR APPLICATION, SEE DETAILS
DG-5	TRUCK TRANSFER TANK DIVERTER GATE	SEE DETAILS	PNEUMATICALLY ACTUATED - 45 DEGREE DIVERTER GATE	CUSTOM MANUFACTURED FOR APPLICATION, SEE DETAILS
DG-6	RECOVERY TANK 7A DIVERTER GATE	SEE DETAILS	PNEUMATICALLY ACTUATED - 45 DEGREE DIVERTER GATE	CUSTOM MANUFACTURED FOR APPLICATION, SEE DETAILS
DG-7	RECOVERY TANK 7B DIVERTER GATE	SEE DETAILS	PNEUMATICALLY ACTUATED - 45 DEGREE DIVERTER GATE	CUSTOM MANUFACTURED FOR APPLICATION, SEE DETAILS
DG-8	RECOVERY TANK 6A DIVERTER GATE	SEE DETAILS	PNEUMATICALLY ACTUATED - 45 DEGREE DIVERTER GATE	CUSTOM MANUFACTURED FOR APPLICATION, SEE DETAILS
DG-9	RECOVERY TANK 6B DIVERTER GATE	SEE DETAILS	PNEUMATICALLY ACTUATED - 45 DEGREE DIVERTER GATE	CUSTOM MANUFACTURED FOR APPLICATION, SEE DETAILS

NOTE: MANUALLY OPERATED STOP GATES NOT SHOWN

MONITORING STATION PRESSURE VESSEL SCHEDULE

VESSEL NO	SERVICE	SIZE	PRESSURE RATING	TYPE	COMMENTS
PV-1	MONITORING STATION UTILITY WATER SUPPLY	79 GALLONS	125 PSIG	BLADDER TYPE HYDRO-PNEUMATIC TANK	EPOXY COATING INSIDE AND OUT
PV-2	MONITORING STATION COMPRESSED AIR SUPPLY	120 GALLONS	200 PSIG	AIR RECEIVER	EPOXY COATING INSIDE AND OUT

OUTDOOR PIPE INSULATION & HEAT TRACE SCHEDULE

NOMINAL PIPE DIAMETER (IN)	INSULATION THICKNESS (IN)	HEAT TRACE (WATTS/ FOOT)
1/2"	1/2"	2.5
3/4"	1/2"	3.0
1"	1/2"	3.5
1 1/2"	1/2"	4.5
2"	1/2"	5.0
2 1/2"	1/2"	6.0
3"	1/2"	7.5
3 1/2"	1/2"	8.5
4"	1/2"	9.5
6"	1/2"	5.5
8"	1"	7.5
10"	1"	9.0
12"	1"	10.5
14"	2"	7.0
16"	2"	8.0
18"	2"	8.5
20"	2"	9.0
24"	2"	10.5

PRELIMINARY
95% SUBMITTAL

US Army Corps of Engineers
Seattle District

Symbol	Description	Date
		/ /

Appr.	Symbol	Description

Date: 16 JUN 08
File • E-56-14-19
Rev.

Designed by: LP
Drawn by: Autoscan, Inc.
Checked by: LC

U.S.ARMY ENGINEER DISTRICT SEATTLE
CORPS OF ENGINEERS
SEATTLE, WASHINGTON

Prepared by: HDR | FISHPRO

ADDITIONAL WATER STORAGE PROJECT
HOWARD HANSON DAM

MECHANICAL SCHEDULES

GREEN RIVER WASHINGTON

Plate number:
MF 29
Sheet of

DATE AND TIME PLOTTED: 8/6/2008 3:05:55 PM DESIGN FILE: I:\AECDESIGNS\HHAW\OTHER\HDRINC\2008061F\VHSM-MF29.DGN

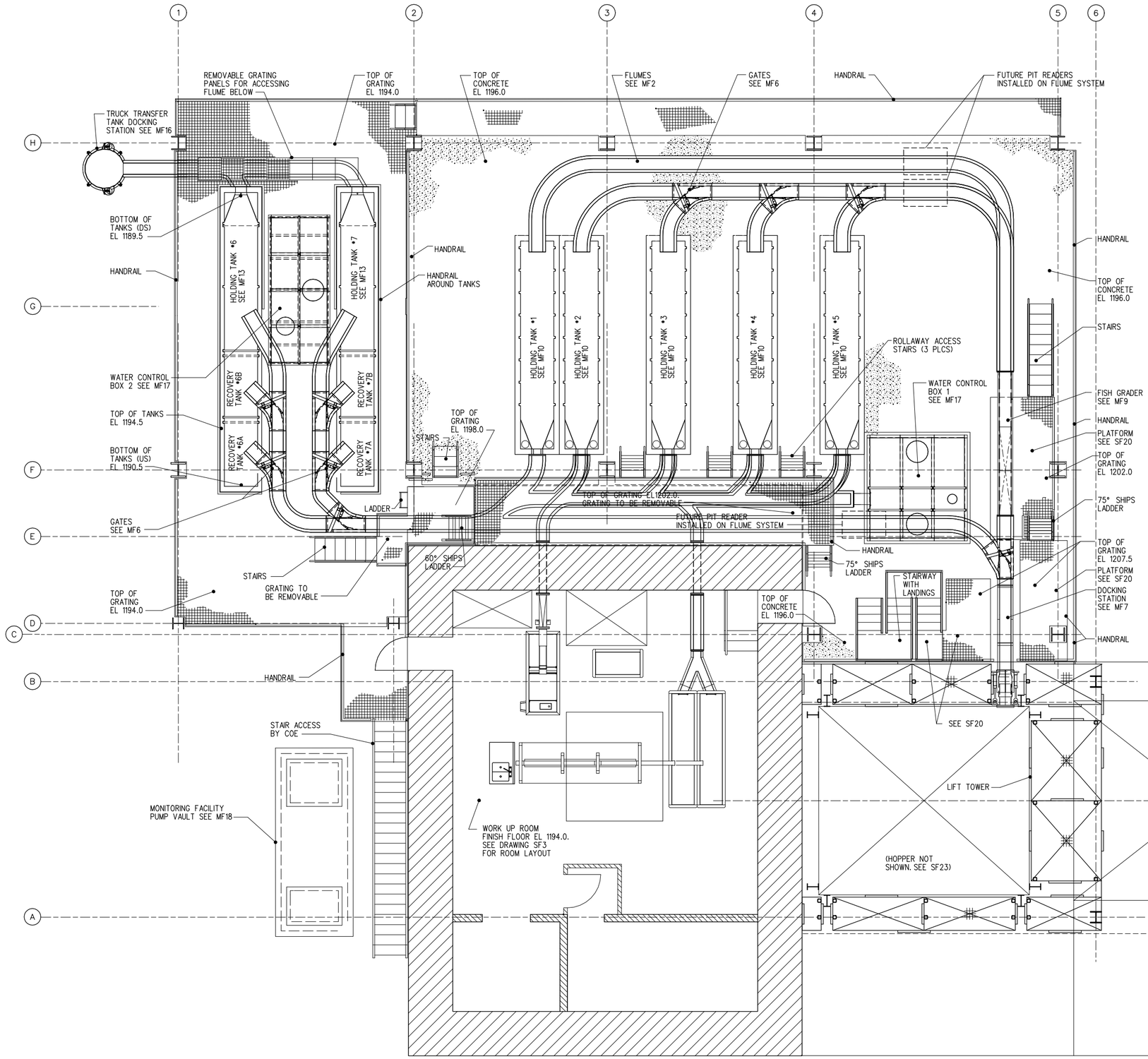

GENERAL ARRANGEMENT PLAN

1/4" = 1'-0" 5' 0 5'

PRELIMINARY
95% SUBMITTAL

US Army Corps of Engineers
Seattle District

Symbol	Description	Date	Appr.	Symbol	Description
		/ /			

Date: 16 JUN 08
File #: E-56-14-19
Rev.

Designed by: JLH
Drawn by: Autoscan, Inc.
Checked by: ED

U.S.ARMY ENGINEER DISTRICT,SEATTLE
CORPS OF ENGINEERS
SEATTLE, WASHINGTON

Prepared by: HDR | FISHPRO

ADDITIONAL WATER STORAGE PROJECT
HOWARD HANSON DAM
GREEN RIVER WASHINGTON

MONITORING FACILITY
GENERAL
ARRANGEMENT PLAN

Plate number: SF1
Sheet of

FILE: I:\ACCDESIGNS\HHAW\OTHER\HDRINC\2008061\VHSM-SF01.DGN
DATE AND TIME PLOTTED: 8/6/2008 3:05:03 PM DESIGN FILE: 1:1

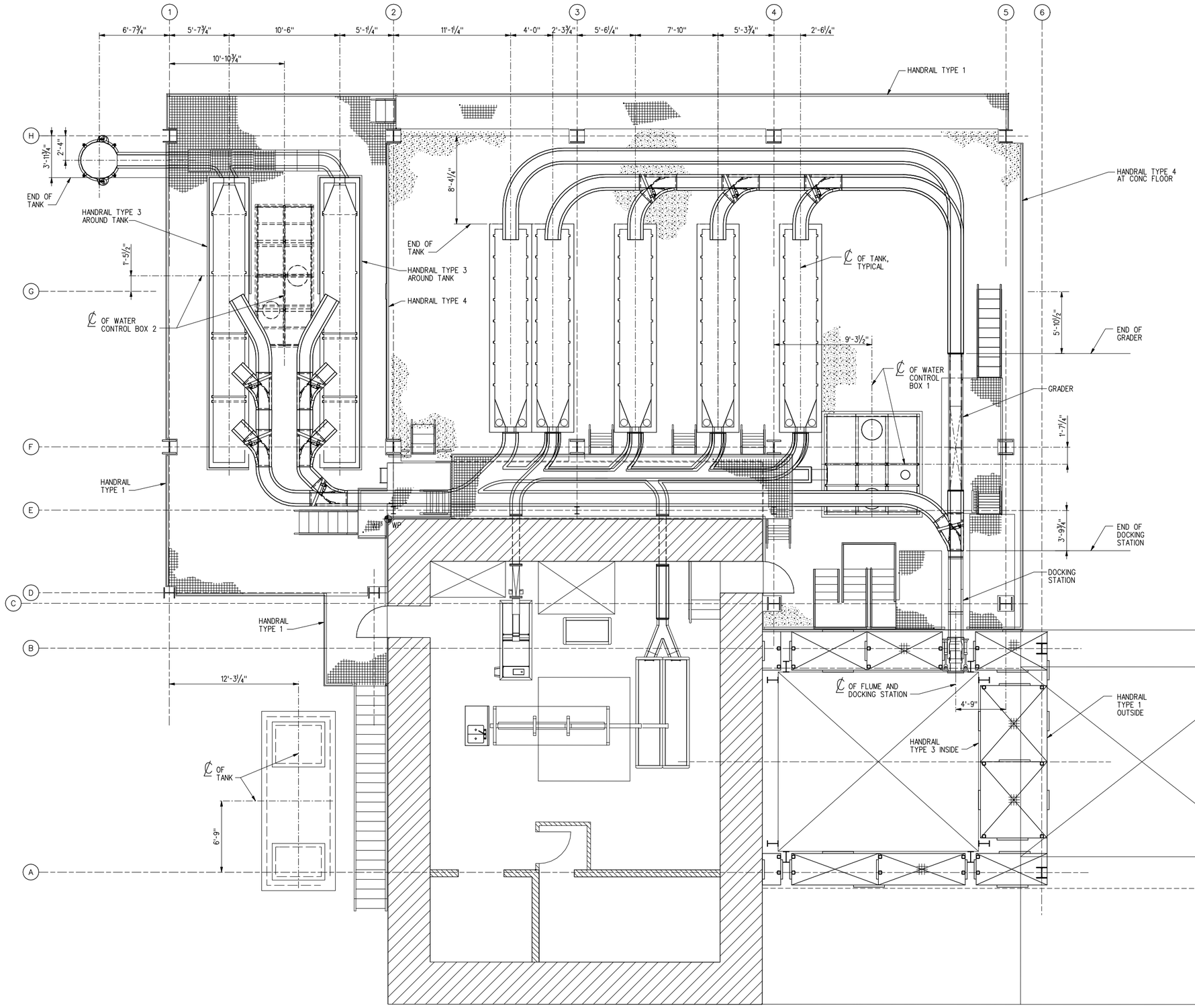

MONITORING FACILITY PLAN

1/4" = 1' - 0" 5' 0 5'

N

PRELIMINARY
95% SUBMITTAL

US Army Corps of Engineers
Seattle District

Symbol	Description	Date	Appr.
		/ /	

Date: 16 JUN 08
File • E-56-14-19
Rev.

Designed by: JLH
Drawn by: Autoscan, Inc.
Checked by: ED

U.S.ARMY ENGINEER DISTRICT,SEATTLE
CORPS OF ENGINEERS
SEATTLE, WASHINGTON

Prepared by: HDR | FISHPRO

ADDITIONAL WATER STORAGE PROJECT
HOWARD HANSON DAM
GREEN RIVER WASHINGTON

MONITORING FACILITY PLAN

Plate number: SF2
Sheet - of -

DATE AND TIME PLOTTED: 8/6/2008 3:05:13 PM DESIGN FILE: I:\AECDESIGNS\HHAW\OTHER\HDRINC\20080611\VHSM-SF02.DGN

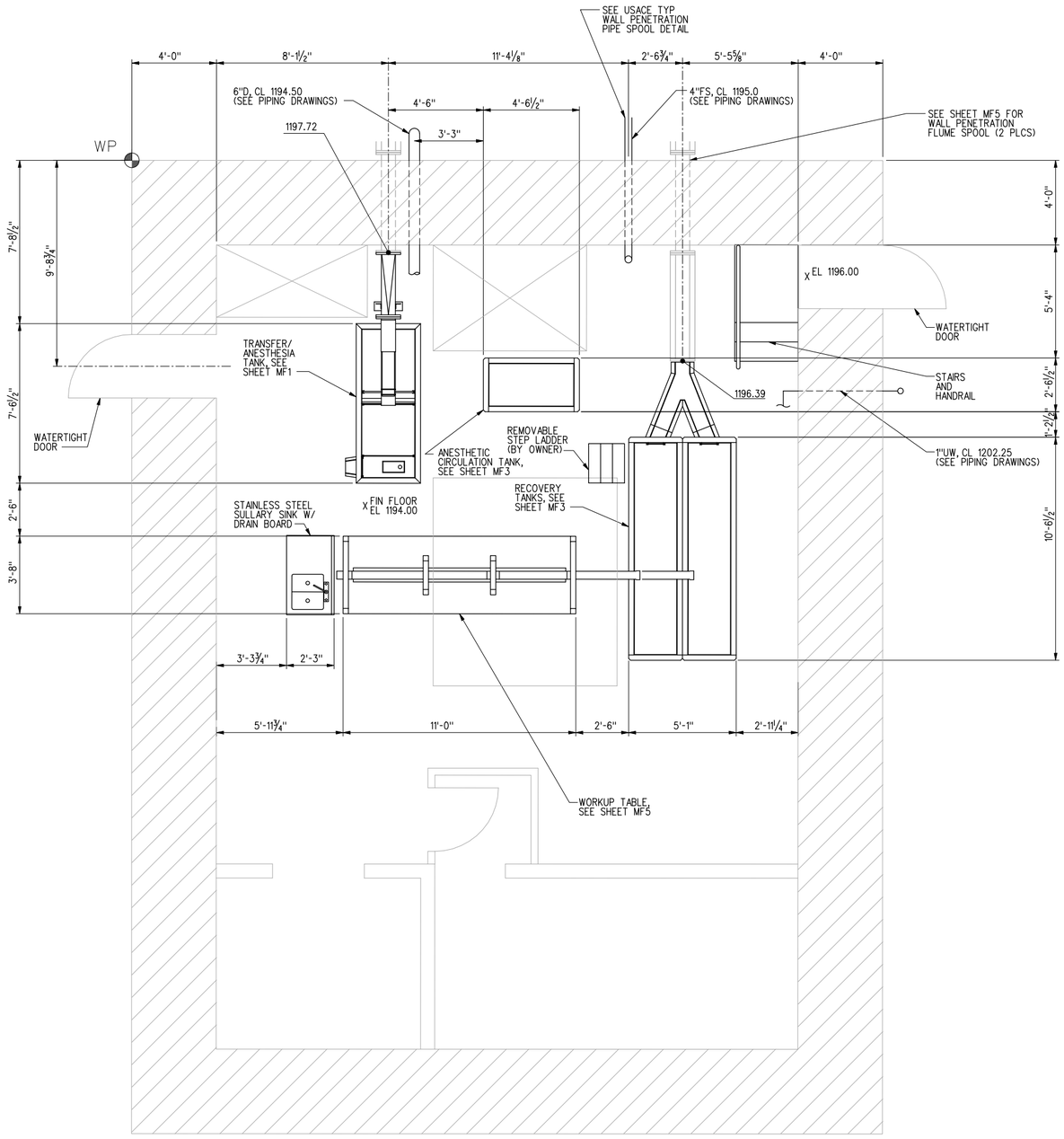

WORKUP ROOM FLOOR PLAN T.O.C. EL 1194.00

⅜" = 1'-0"

PRELIMINARY
95% SUBMITTAL

US Army Corps of Engineers
Seattle District

Symbol	Description	Appr.	Date
			/ /

Designed by: JLH
Drawn by: Autoscan, Inc.
Checked by: ED
Date: 16 JUN 08
File: E-56-14-19
Rev.

U.S.ARMY ENGINEER DISTRICT,SEATTLE
CORPS OF ENGINEERS
SEATTLE, WASHINGTON

Prepared by: HDR | FISHPRO

ADDITIONAL WATER STORAGE PROJECT
HOWARD HANSON DAM
GREEN RIVER

WORKUP ROOM GENERAL ARRANGEMENT

WASHINGTON

Plate number: SF3
Sheet of

DATE AND TIME PLOTTED: 8/6/2008 3:06:27 PM DESIGN FILE: I:\AECDESIGNS\WHAA\OTHER\HDRINC\2008061F\WHSM-SF03.DGN

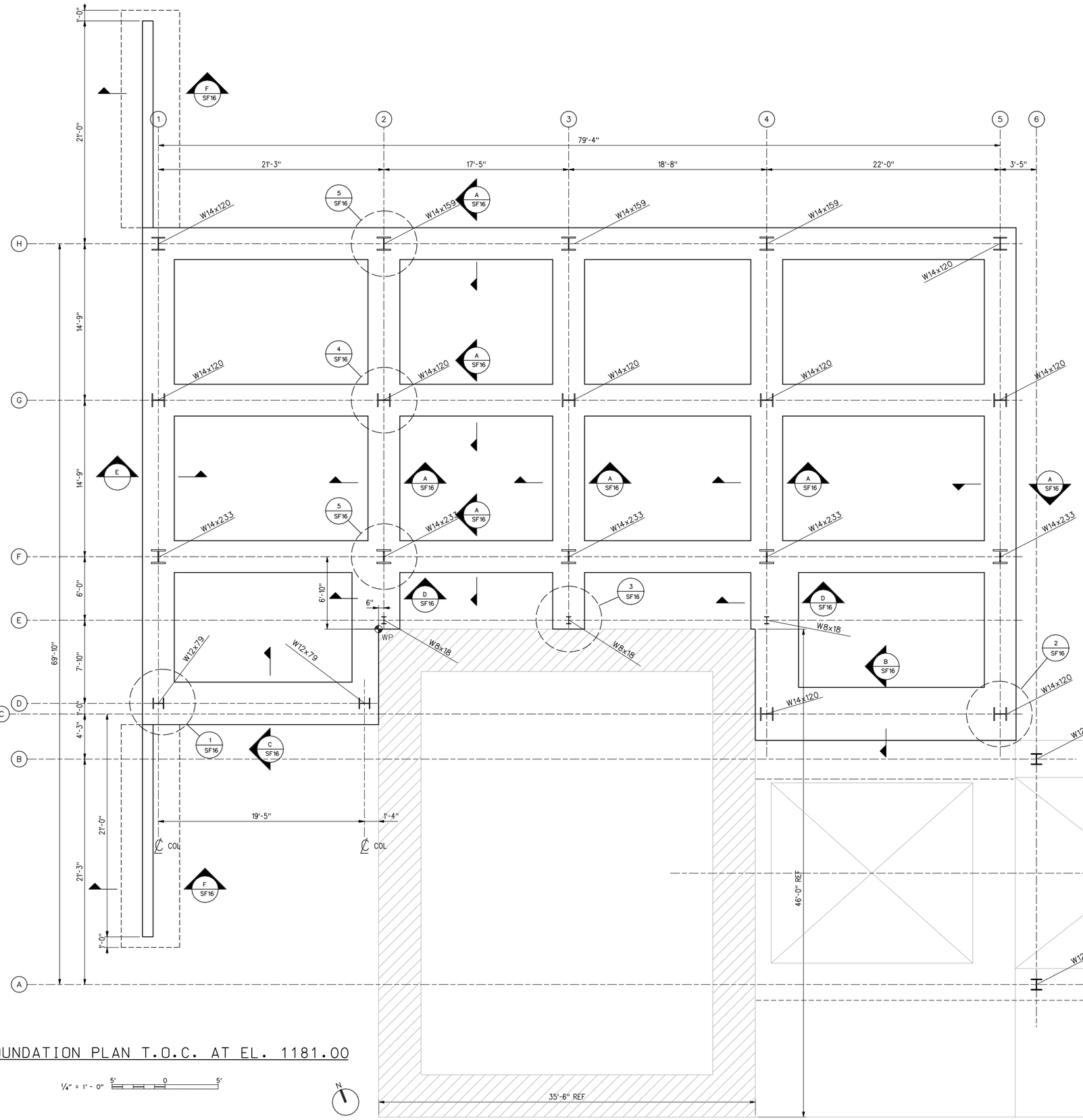

FOUNDATION PLAN T.O.C. AT EL. 1181.00

1/4" = 1' - 0" 5' 0 5'

PRELIMINARY
95% SUBMITTAL

US Army Corps of Engineers
Seattle District

Symbol	Description	Appr.	Date
			/ /

Designed by: JLH
Drawn by: Autoscan, Inc.
Checked by: ED
Date: 16 JUN 08
File: E-56-14-19
Rev.

U.S.ARMY ENGINEER DISTRICT,SEATTLE
CORPS OF ENGINEERS
SEATTLE, WASHINGTON
Prepared by: HDR | FISHPRO

ADDITIONAL WATER STORAGE PROJECT
HOWARD HANSON DAM
GREEN RIVER WASHINGTON

MONITORING FACILITY FOUNDATION PLAN

Plate number: SF 4
Sheet of

DATE AND TIME PLOTTED: 8/6/2008 3:06:35 PM DESIGN FILE: I:\AECDESIGNS\HHAW\OTHER\HDRINC\2008061F\VHSM-SF04.DGN

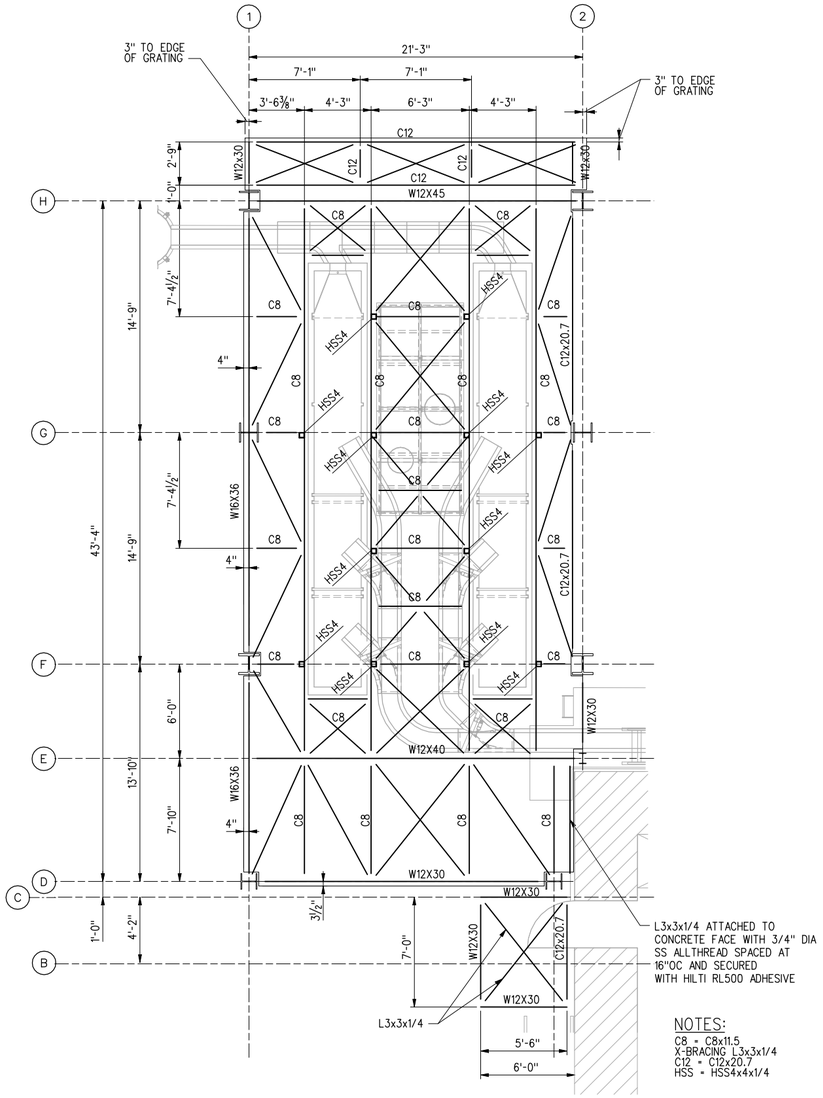

NOTES:
C8 = C8x11.5
X-BRACING L3x3x1/4
C12 = C12x20.7
HSS = HSS4x4x1/4

PARTIAL PLAN @ T.O.G. 1194.00

1/4" = 1' - 0" 5' 0 5'

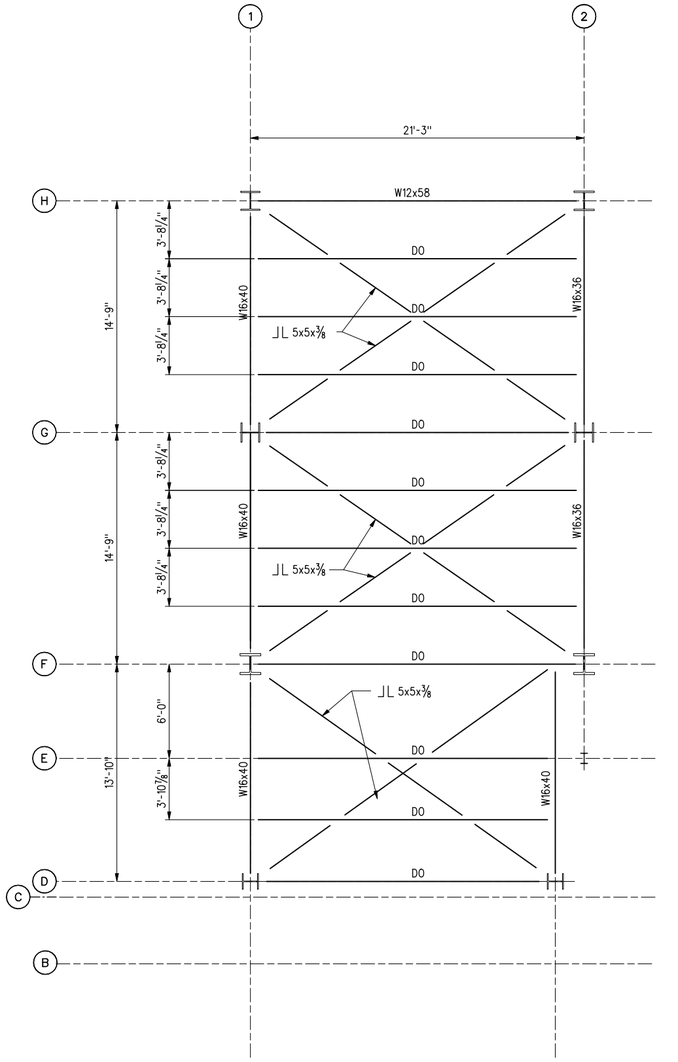

PARTIAL PLAN @ T.O.S. 1189.00

1/4" = 1' - 0" 5' 0 5'

NOTES:
1. REF TO SF6 FOR GENERAL STEEL NOTES AND SF17 FOR TYPICAL DETAILS.

PRELIMINARY
95% SUBMITTAL

US Army Corps of Engineers
Seattle District

Symbol	Description	Appr.	Date
			/ /

U.S.ARMY ENGINEER DISTRICT,SEATTLE
CORPS OF ENGINEERS
SEATTLE, WASHINGTON
Prepared by: HDR | FISHPRO

Designed by: JLH
Drawn by: Autoscan, Inc.
Checked by: ED
Date: 16 JUN 08
File • E-56-14-19
Rev.

ADDITIONAL WATER STORAGE PROJECT
HOWARD HANSON DAM
MONITORING FACILITY
PARTIAL FRAMING PLANS
GREEN RIVER WASHINGTON

Plate number: SF5
Sheet of

DATE AND TIME PLOTTED: 8/6/2008 3:06:38 PM DESIGN FILE: I:\AECDESIGNS\HHAM\OTHER\HDRINC\2008061F\VHHSM-SF05.DGN

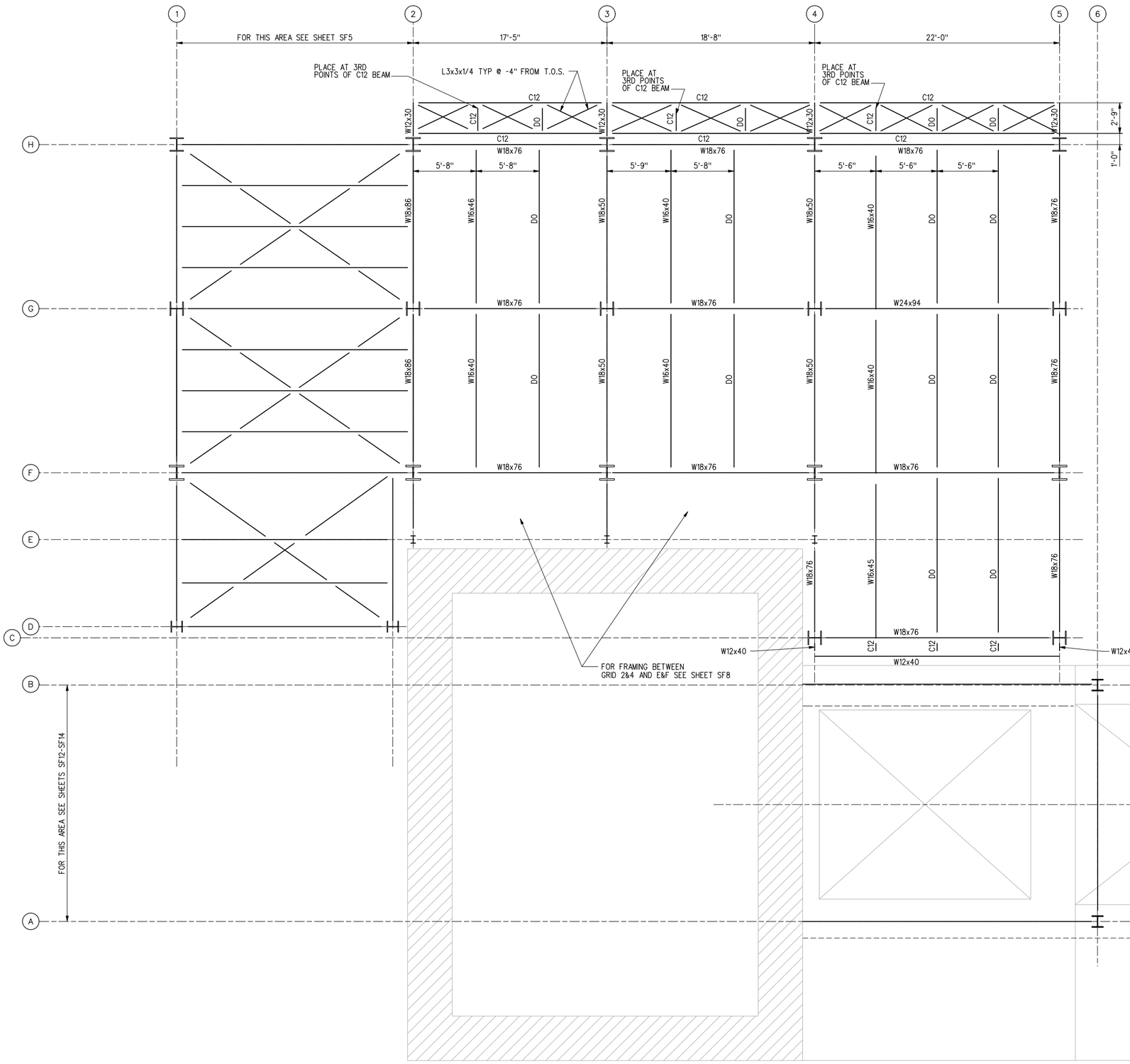

NOTES:

1. ALL WIDE FLANGES TO HAVE $^3/_4$"DIAx6" LONG HEADED STUDS @ 12"oc LOCATED @ CL OF WF.
2. C12 = C12x20.7
3. SEE SF17 FOR TYPICAL FRAMING DETAILS.

STEEL NOTES:

1.) ALL EXISTING DIMENSIONS & ELEVATIONS ARE GIVEN FOR REFERENCE INFORMATION ONLY. THE CONTRACTOR SHALL FIELD VERIFY ALL REFERENCE INFORMATION & EXISTING CONDITIONS THAT MAY AFFECT FABRICATION OR CONSTRUCTION.

2.) MATERIALS, WORKMANSHIP, FABRICATION, ERECTION & CONNECTION DESIGN SHALL CONFORM TO "AISC SPECIFICATIONS FOR THE DESIGN, FABRICATION & ERECTION OF STRUCTURAL STEEL FOR BUILDINGS", NINTH EDITION.

3.) UNLESS NOTED OTHERWISE ON THE DRAWINGS, STRUCTURAL AND MISCELLANEOUS STEEL SHALL CONFORM TO ASTM A36; TUBE STEEL SHALL CONFORM TO ASTM A500, GRADE B; AND PIPE SHALL CONFORM TO ASTM A53, GRADE B.

5.) ALL FRAMED BEAM CONNECTIONS SHALL CONFORM TO TABLE II OR TABLE II COMBINED WITH TABLE III, PART 4 "AISC STEEL CONSTRUCTION MANUAL", NINTH EDITION. THE BEAM CONNECTIONS SHALL BE DESIGNED FOR THE SHEARS GIVEN. IF NO SHEAR IS GIVEN OR OTHERWISE NOTED, USE THE MAXIMUM NUMBER OF BOLTS THE WEB CAN CONTAIN AT 3" SPACING IN A SINGLE VERTICAL LINE. IN ADDITION TO THE SHEAR DESIGN REQUIREMENTS, CONNECTIONS WILL ALSO BE DESIGNED FOR ANY AXIAL LOADS & MOMENTS SHOWN ON THE DRAWINGS. IF NO LOADS ARE SHOWN, NOT LESS THAN TWO BOLTS SHALL BE USED IN ANY CONNECTION. FOR DESIGN PURPOSES, (+) INDICATES TENSION AND (-) INDICATES COMPRESSION ON AXIALLY LOADED MEMBERS.

6.) ALL BOLTED CONNECTIONS SHALL BE BEARING TYPE (THREADS INCLUDED IN THE SHEAR PLANE) MADE WITH $^3/_4$" HIGH STRENGTH BOLTS CONFORMING TO ASTM A325-N, UNLESS NOTED OTHERWISE.

7.) ALL WELDING SHALL BE DONE BY AWS CERTIFIED WELDERS USING ELECTRODES CONFORMING TO AWS SPECIFICATION A5.1 OR 15.5 CLASS E70XX SERIES.

8.) STEEL SURFACE COATING SHAL BE HOT DIPPED GALVANIZING AS PER ASTM A125 AND ASTM A153 FOR FASTENERS. FIELD TOUCH-UP AND REPAIR SHALL BE IN ACCORDANCE WITH ASTM A780, LOW MELTING POINT ZINC ALLOY REPAIR RODS OR POWDER

PLAN AT T.O.S. EL. 1195.08

1/4" = 1'-0" 5' 0 5'

PRELIMINARY
95% SUBMITTAL

US Army Corps of Engineers
Seattle District

Symbol	Description	Date	Appr
		/ /	

Designed by: JLH
Drawn by: Autoscan, Inc.
Checked by: ED
Date: 16 JUN 08
File # E-56-14-19
Rev.

U.S.ARMY ENGINEER DISTRICT,SEATTLE
CORPS OF ENGINEERS
SEATTLE, WASHINGTON
Prepared by: HDR | FISHPRO

ADDITIONAL WATER STORAGE PROJECT
HOWARD HANSON DAM
GREEN RIVER WASHINGTON

MONITORING FACILITY FLOOR FRAMING PLAN

Plate number: SF6
Sheet - of -

DATE AND TIME PLOTTED: 8/6/2008 3:06:40 PM DESIGN FILE: I:\AECDESIGNS\HHAM\OTHER\HDRINC\2008061\HHSM-SF06.DGN

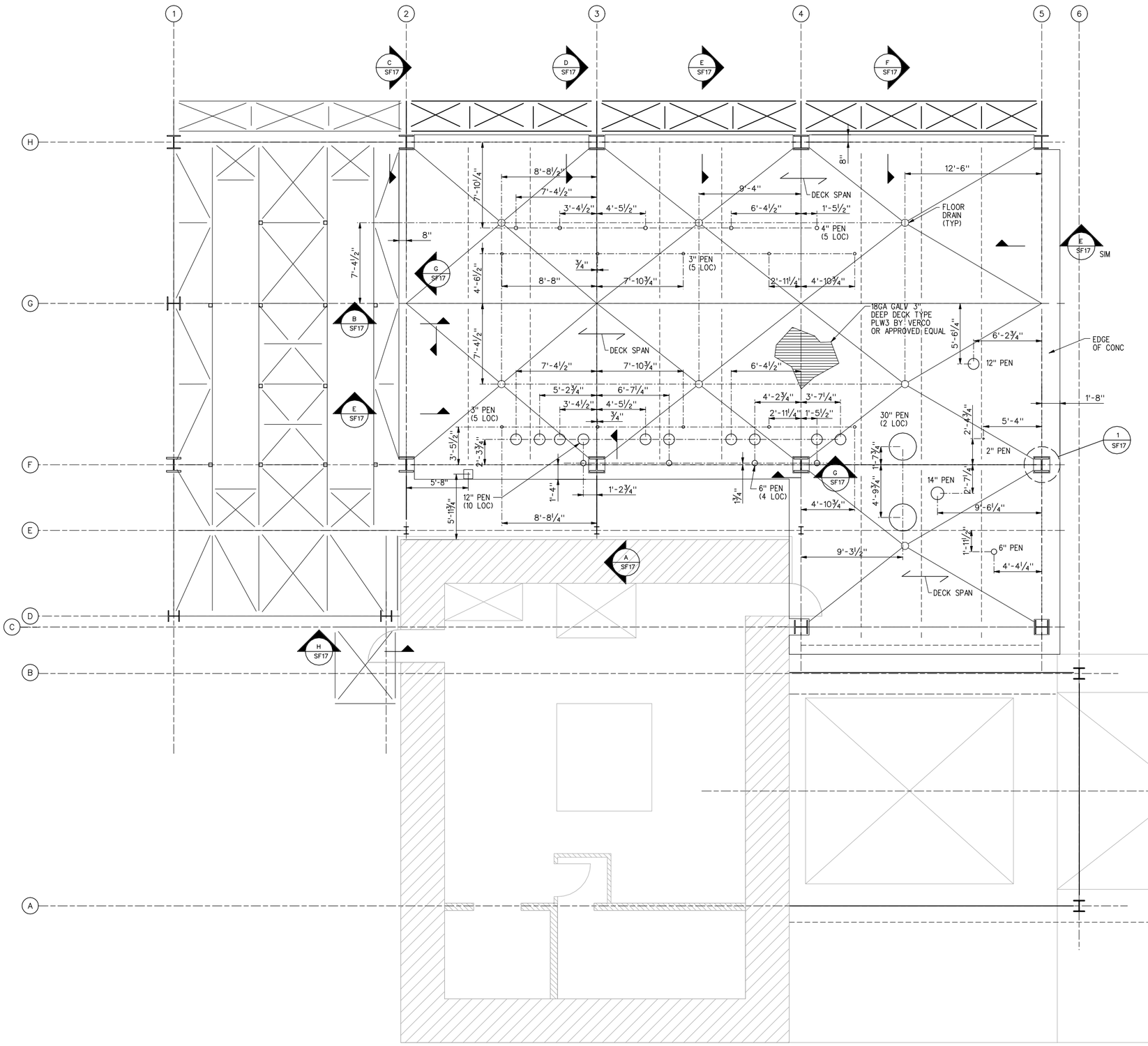

NOTE:
1. PIPING PENETRATIONS TO CONCRETE DECK ARE APPROXIMATE AND SHALL BE COORDINATED WITH PIPING AND EQUIPMENT LAYOUTS BY CONTRACTOR.
2. FLOOR DRAIN RIM EL TO BE 1195.83'.
3. RIDGES TO BE SET ON GRIDS W/ EL 1196.00.
4. SEE DETAIL 2 ON SF17 FOR STEEL DECK ATTACHMENT.

PLAN AT T.O.C. EL. 1196.0

1/4" = 1' - 0" 5' 0 5'

PRELIMINARY
95% SUBMITTAL

US Army Corps of Engineers
Seattle District

Symbol	Description	Date	Appr.	Symbol	Description
		/ /			

Designed by: JLH
Drawn by: Autoscan, Inc.
Checked by: ED
Date: 16 JUN 08
File # E-56-14-19
Rev.

U.S.ARMY ENGINEER DISTRICT,SEATTLE
CORPS OF ENGINEERS
SEATTLE, WASHINGTON

Prepared by: HDR | FISHPRO

ADDITIONAL WATER STORAGE PROJECT
HOWARD HANSON DAM

MONITORING FACILITY CONCRETE FLOOR PLAN

GREEN RIVER WASHINGTON

Plate number: SF7
Sheet - of -

DATE AND TIME PLOTTED: 8/6/2008 3:06:43 PM DESIGN FILE: I:\AECDESIGNS\HHAM\OTHERS\HDRINC\2008061\HHSM-SF07.DGN

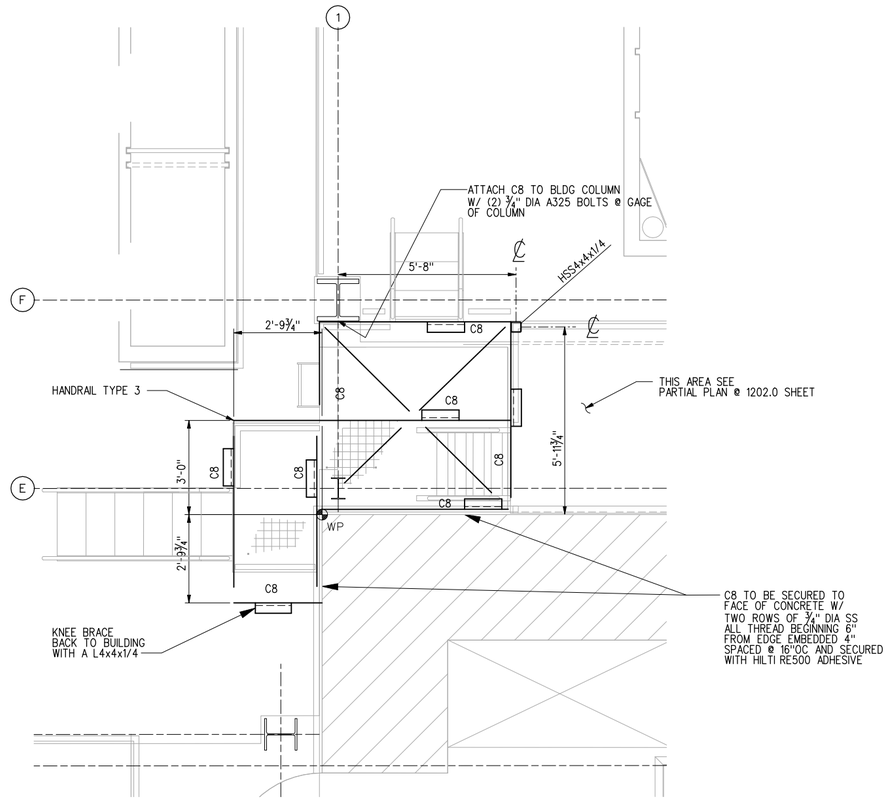

PATRIAL PLAN AT T.O.G. EL 1198.0

½" = 1'-0" 12"6" 0 1' 2' 3' 4' 5'

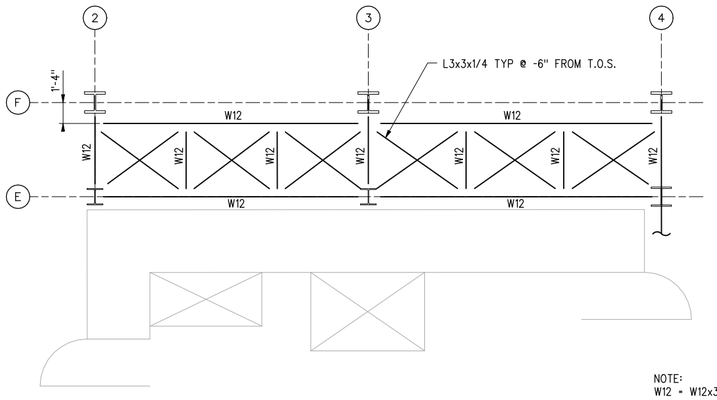

NOTE:
W12 = W12x30

PARTIAL PLAN AT T.O.G. EL. 1194.0

•' = 1'-0" 5' 0 5'

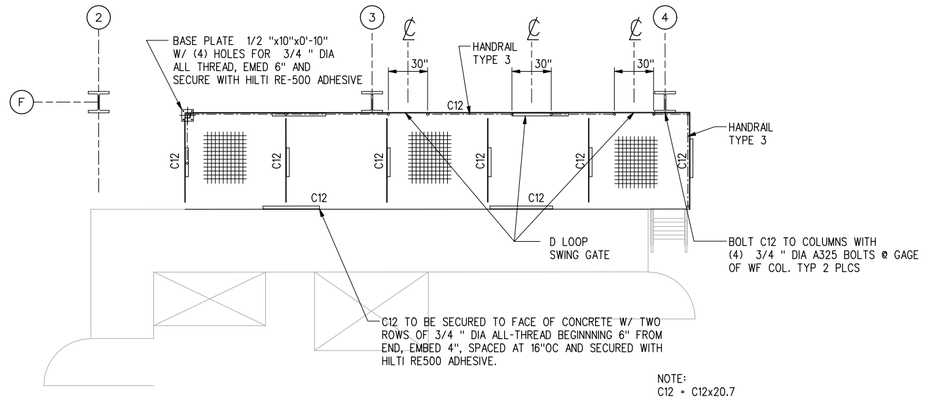

NOTE:
C12 = C12x20.7

PARTIAL PLAN AT T.O.G. EL. 1202.0

•' = 1'-0" 5' 0 5'

PRELIMINARY
95% SUBMITTAL

US Army Corps of Engineers
Seattle District

Symbol	Description	Date
		/ /

Designed by: JLH
Drawn by: Autoscan, Inc.
Checked by: ED
Date: 16 JUN 08
File • E-56-14-19
Rev.

U.S.ARMY ENGINEER DISTRICT,SEATTLE
CORPS OF ENGINEERS
SEATTLE, WASHINGTON

Prepared by: HDR | FISHPRO

ADDITIONAL WATER STORAGE PROJECT
HOWARD HANSON DAM
GREEN RIVER WASHINGTON

MONITORING FACILITY PLATFORM FRAMING PLANS

Plate number: SF8
Sheet of

DATE AND TIME PLOTTED: 8/6/2008 3:06:52 PM DESIGN FILE: I:\AECDESIGNS\HHAW\OTHER\HDRINC\20080619\HHSM-SF08.DGN

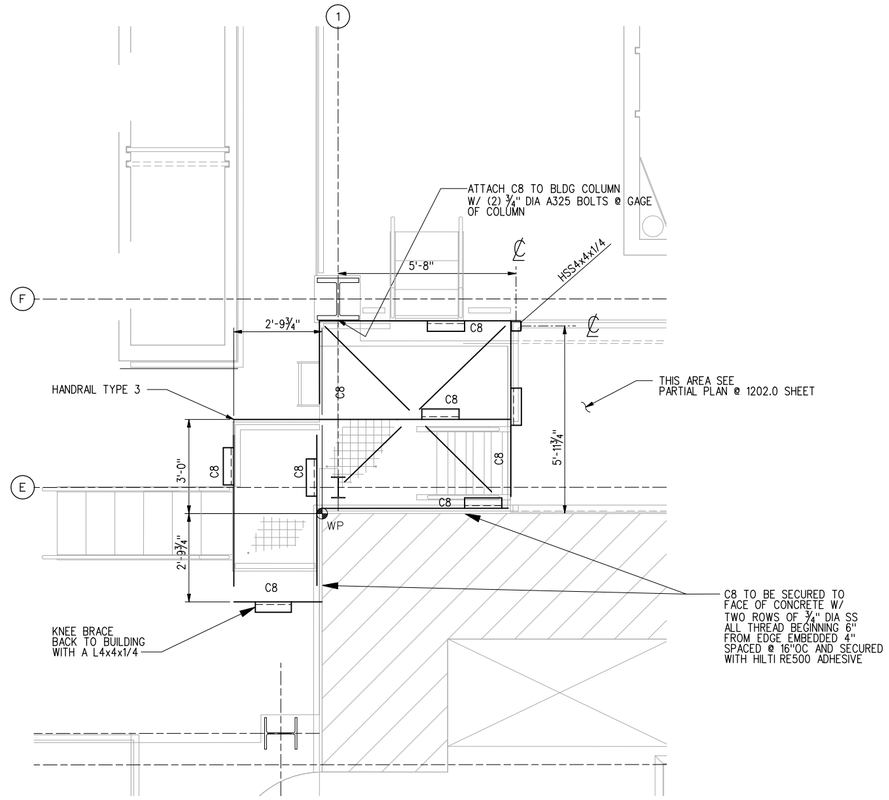

PATRIAL PLAN AT T.O.G. EL 1198.0

1/2" = 1'-0" 12"6" 0 1' 2' 3' 4' 5'

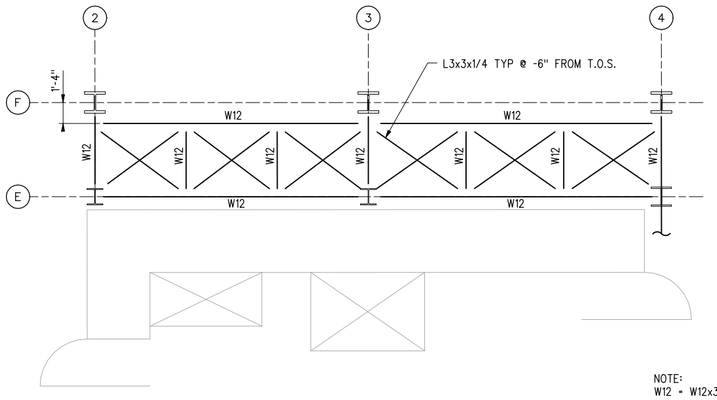

NOTE:
W12 = W12x30

PARTIAL PLAN AT T.O.G. EL. 1194.0

•' = 1'-0" 5' 0 5'

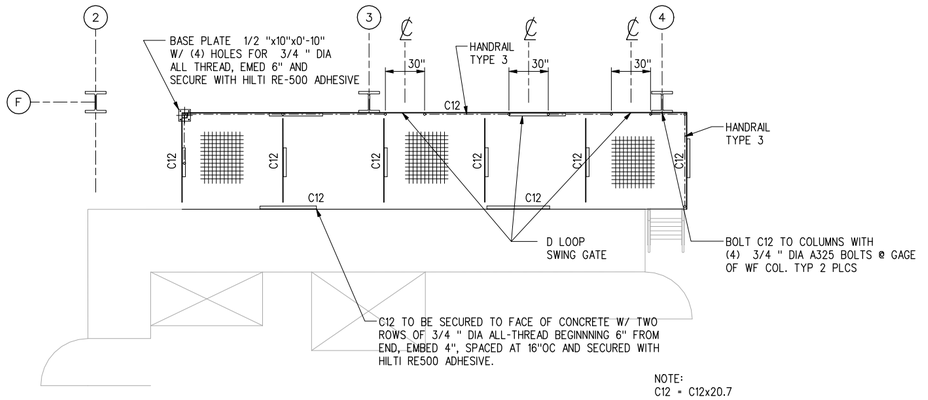

NOTE:
C12 = C12x20.7

PARTIAL PLAN AT T.O.G. EL. 1202.0

•' = 1'-0" 5' 0 5'

PRELIMINARY
95% SUBMITTAL

US Army Corps of Engineers
Seattle District

Symbol	Description	Appr.	Date
			/ /

Designed by: JLH
Drawn by: Autoscan, Inc.
Checked by: ED
Date: 16 JUN 08
File • E-56-14-19
Rev.

U.S.ARMY ENGINEER DISTRICT,SEATTLE
CORPS OF ENGINEERS
SEATTLE, WASHINGTON
Prepared by: HDR | FISHPRO

ADDITIONAL WATER STORAGE PROJECT
HOWARD HANSON DAM
GREEN RIVER WASHINGTON

MONITORING FACILITY PLATFORM FRAMING PLANS

Plate number: SF8
Sheet of

DATE AND TIME PLOTTED: 8/6/2008 3:06:53 PM DESIGN FILE: I:\AECDESIGNS\HHAW\OTHER\HDRINC\20080619\VHSM-SF08.DGN

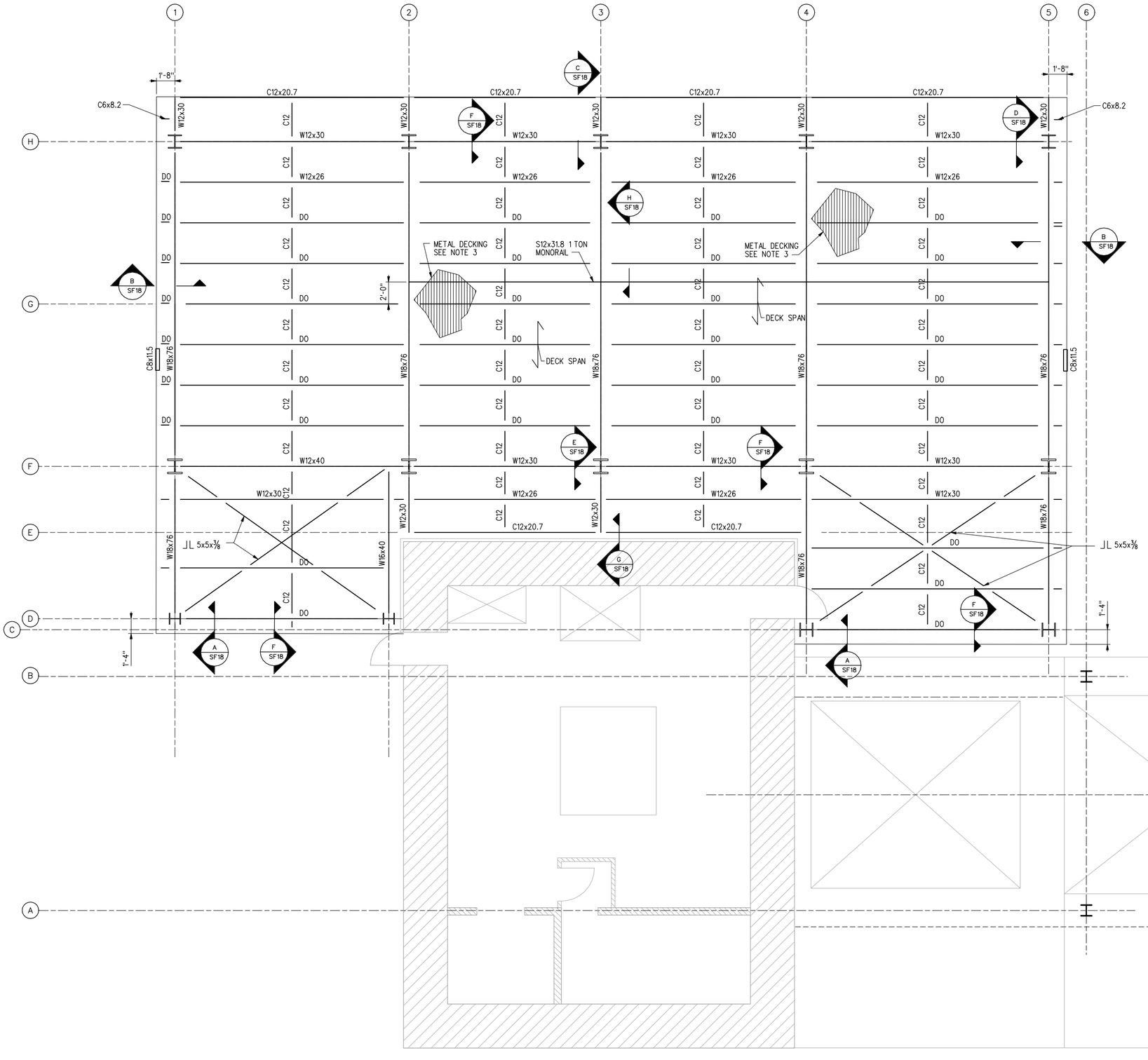

NOTES:

1. SEE SHEET SF17 FOR TYPICAL FRAMING DETAILS.
2. METAL DECKING SHALL BE STAGGARED SO NO SINGLE SEEM FORMS BETWEEN GRID 1 AND 6.
3. METAL DECKING TO BE 20 GAGE PLB-36 BY VERCO. SEE DETAIL 2 ON SF17 FOR ATTACHMENT.

ROOF PLAN

1/4" = 1'-0" 5' 0 5'

NOTES:
C12 = C12x20.7

PRELIMINARY
95% SUBMITTAL

US Army Corps of Engineers
Seattle District

Symbol	Description	Appr.	Date
			/ /

Designed by: JLH
Drawn by: Autoscon, Inc.
Checked by: ED
Date: 16 JUN 08
File: E-56-14-19
Rev.

U.S.ARMY ENGINEER DISTRICT SEATTLE
CORPS OF ENGINEERS
SEATTLE, WASHINGTON
Prepared by: HDR | FISHPRO

ADDITIONAL WATER STORAGE PROJECT
HOWARD HANSON DAM
GREEN RIVER WASHINGTON

MONITORING FACILITY ROOF FRAMING PLAN

Plate number: SF9
Sheet - of -

DATE AND TIME PLOTTED: 8/6/2008 3:07:01 PM DESIGN FILE: I:\AECDESIGNS\HHAW\OTHER\HDRINC\2008061F\VHSM-SF09.DGN

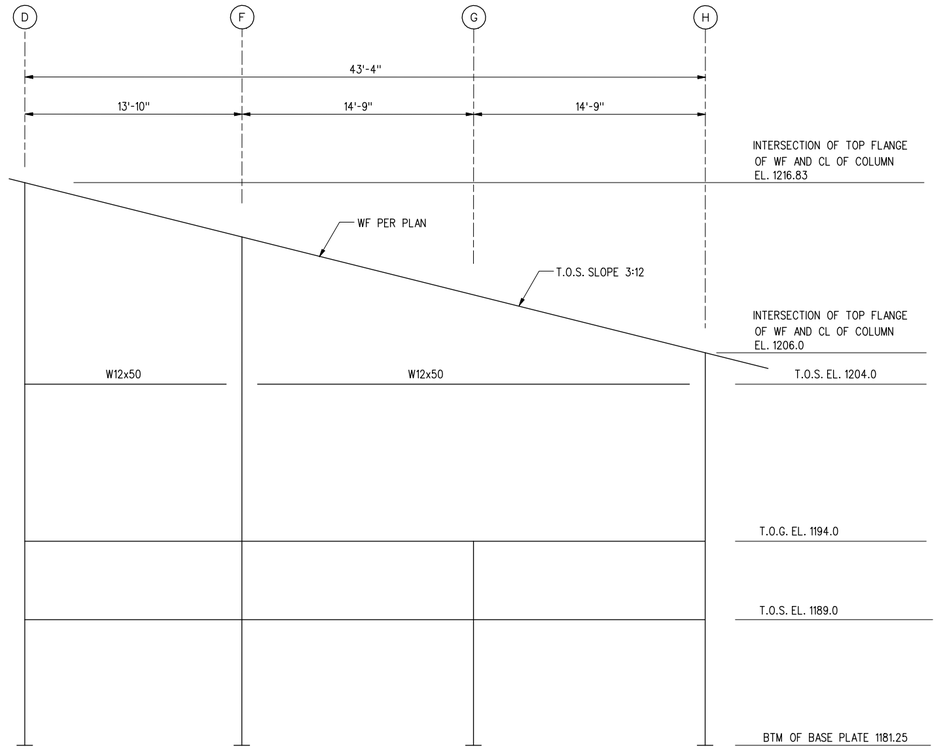

GRID 1 ELEVATON

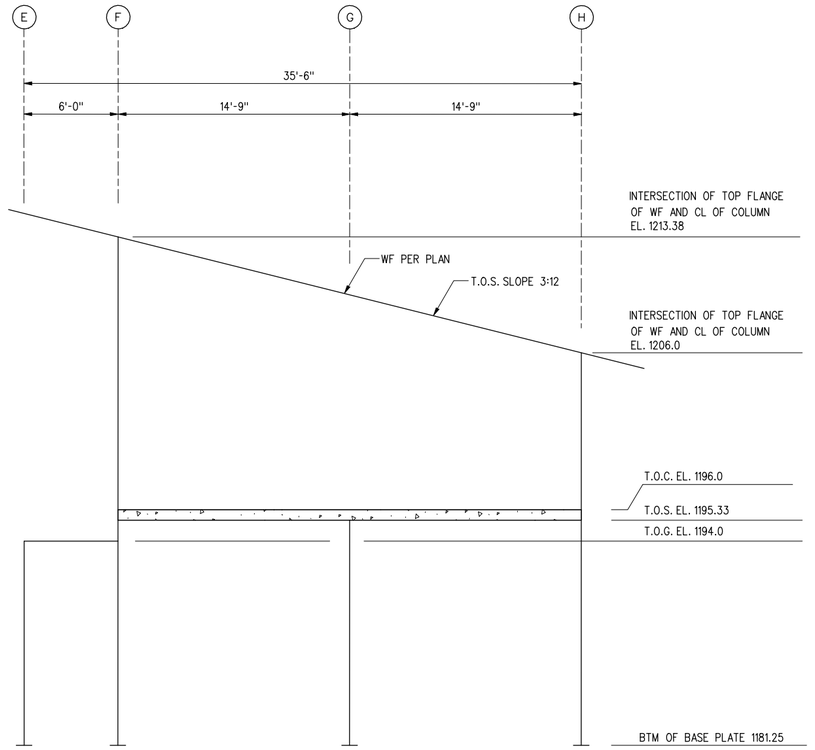

GRID 3 ELEVATON

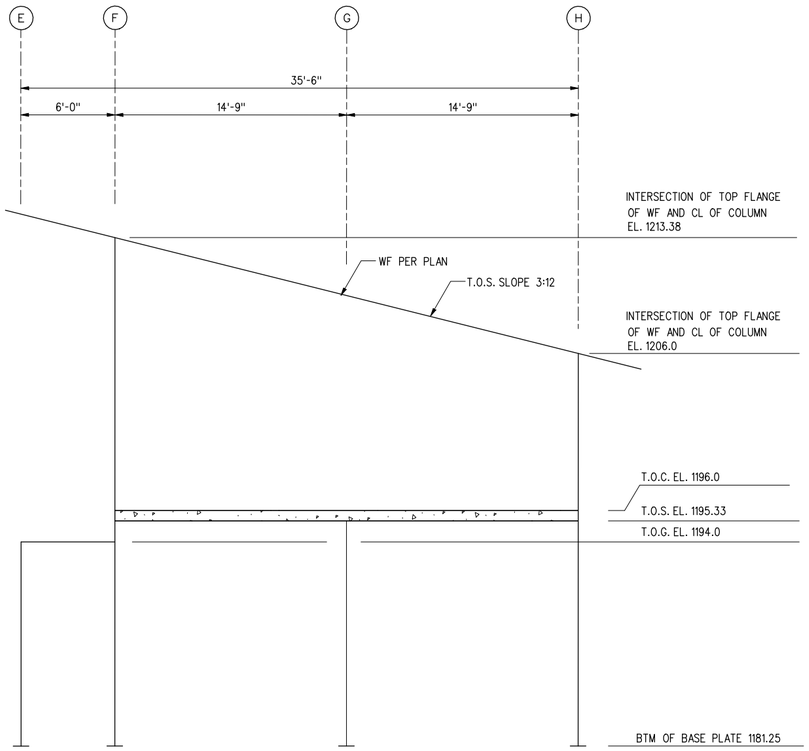

GRID 2 ELEVATON

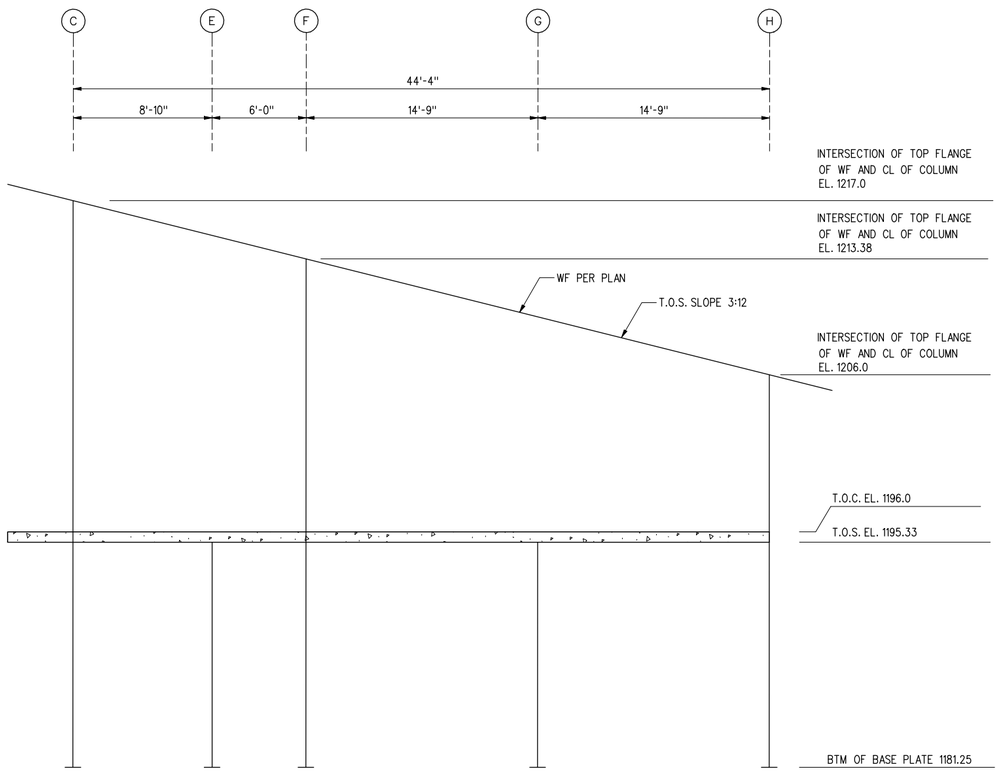

GRID 4 ELEVATON

PRELIMINARY
95% SUBMITTAL

US Army Corps of Engineers
Seattle District

Symbol	Description	Appr.	Date
			/ /

Designed by: JLH
Drawn by: Autoscan, Inc.
Checked by: ED
Date: 16 JUN 08
File • E-56-14-19
Rev.

U.S.ARMY ENGINEER DISTRICT,SEATTLE
CORPS OF ENGINEERS
SEATTLE, WASHINGTON
Prepared by: HDR | FISHPRO

ADDITIONAL WATER STORAGE PROJECT
HOWARD HANSON DAM
GREEN RIVER WASHINGTON

MONITORING FACILITY
SECTIONS I

Plate number:
SF10
Sheet - of -

DATE AND TIME PLOTTED: 8/6/2008 3:07:04 PM DESIGN FILE: I:\AECDESIGNS\HHAW\OTHER\HDRINC\20080619\WHSM-SF10.DGN

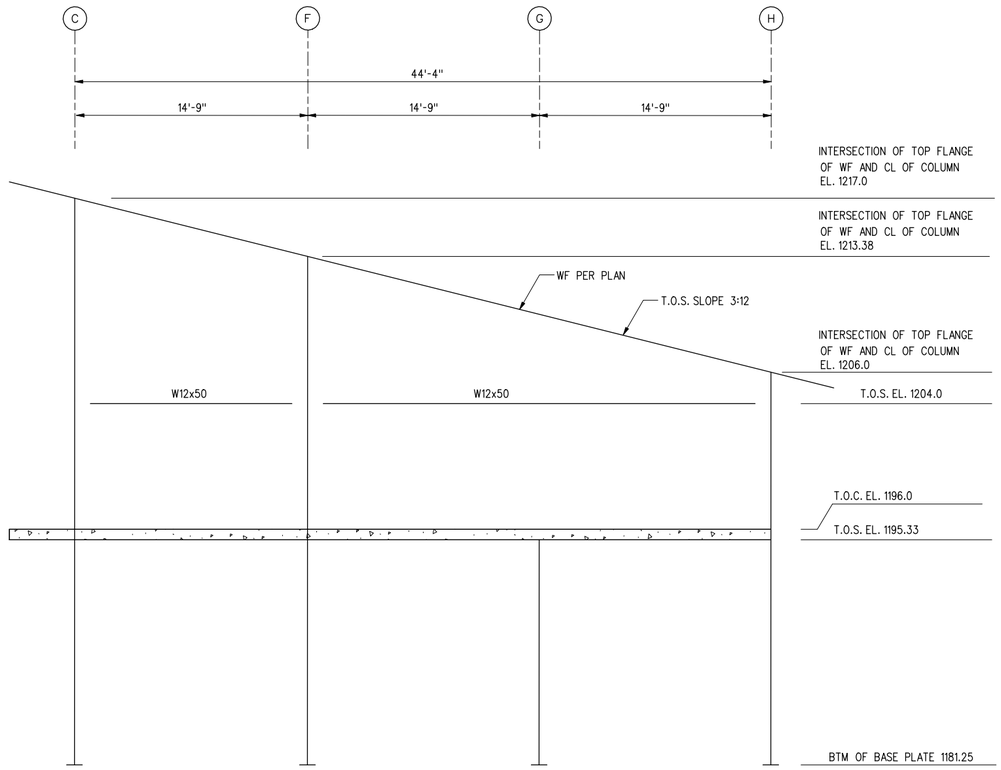

GRID 5 ELEVATON

1/4" = 1'-0" 5' 0 5'

PRELIMINARY
95% SUBMITTAL

US Army Corps of Engineers
Seattle District

Symbol	Description	Date	Appr.
		/ /	

Designed by: JLH
Drawn by: Autoscan, Inc.
Checked by: ED
Date: 16 JUN 08
File • E-56-14-19
Rev.

U.S.ARMY ENGINEER DISTRICT,SEATTLE
CORPS OF ENGINEERS
SEATTLE, WASHINGTON
Prepared by: HDR | FISHPRO

ADDITIONAL WATER STORAGE PROJECT
HOWARD HANSON DAM
MONITORING FACILITY
SECTIONS II
GREEN RIVER WASHINGTON

Plate number:
SF11
Sheet - of -

DATE AND TIME PLOTTED: 8/6/2008 3:07:11 PM DESIGN FILE: I:\AECDESIGNS\HHAW\OTHER\HDRINC\20080619\HHSM-SF11.DGN

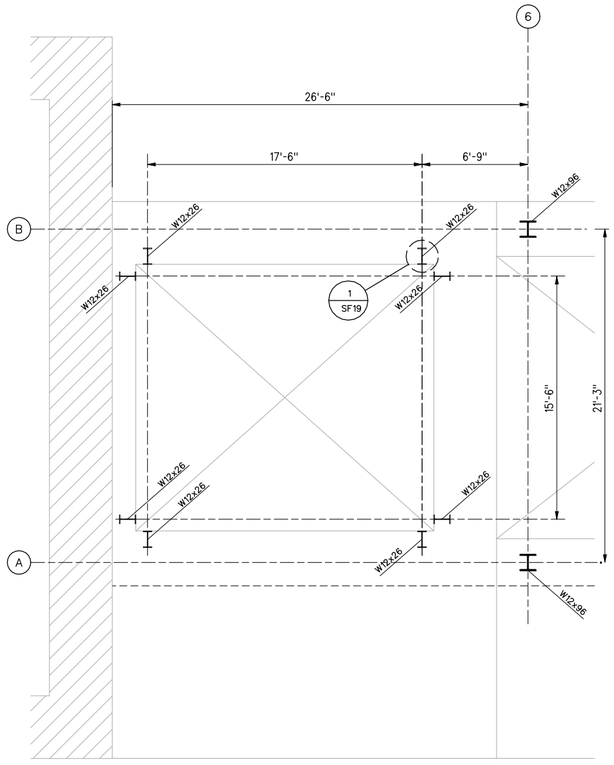

PLAN AT T.O.S. EL. 1181.0

1/4" = 1'-0" 5' 0 5'

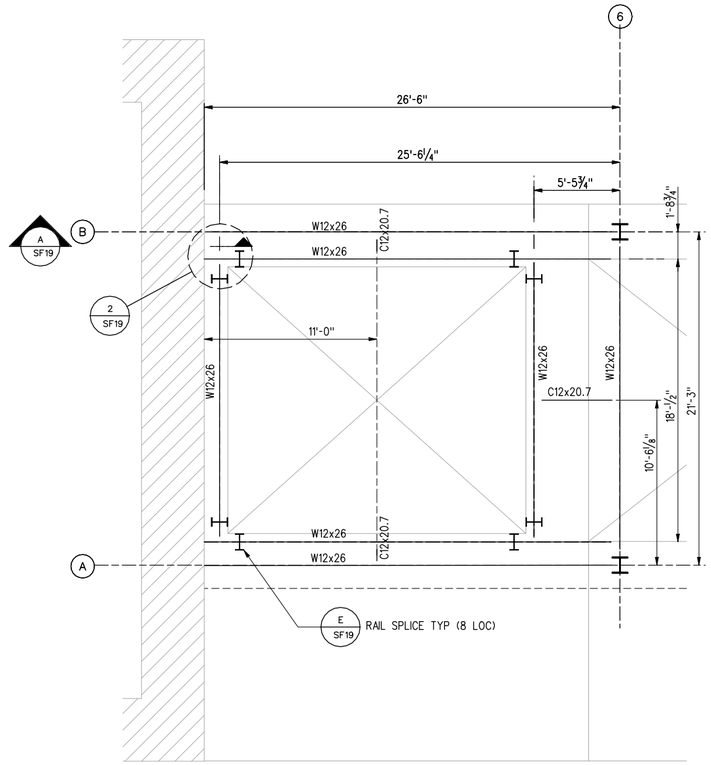

PLAN AT T.O.S. EL. 1193.0

1/4" = 1'-0" 5' 0 5'

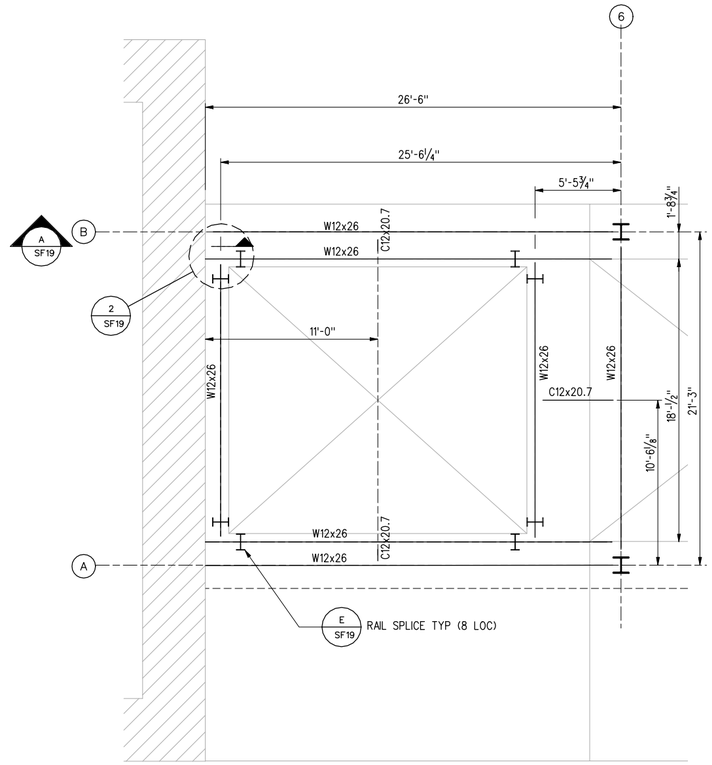

PLAN AT T.O.S. EL. 1205.0

1/4" = 1'-0" 5' 0 5'

NOTES:
SEE SF17 FOR TYPICAL FRAMING DETAILS AND SF6 FOR TYPICAL STEEL NOTES.

PRELIMINARY
95% SUBMITTAL

US Army Corps of Engineers
Seattle District

Symbol	Description	Date	Appr.	Symbol	Description
		/ /			

Designed by: JLH
Drawn by: Autoscan, Inc.
Checked by: ED
Date: 16 JUN 08
File # E-56-14-19
Rev.

U.S.ARMY ENGINEER DISTRICT,SEATTLE
CORPS OF ENGINEERS
SEATTLE, WASHINGTON

Prepared by: HDR | FISHPRO

ADDITIONAL WATER STORAGE PROJECT
HOWARD HANSON DAM
GREEN RIVER WASHINGTON

LIFT TOWER FRAMING PLANS I

Plate number: SF12
Sheet of

DATE AND TIME PLOTTED: 8/6/2008 3:07:13 PM DESIGN FILE: I:\AECDESIGNS\HHAW\OTHER\HDRINC\2008061R\HHSM-SF12.DGN

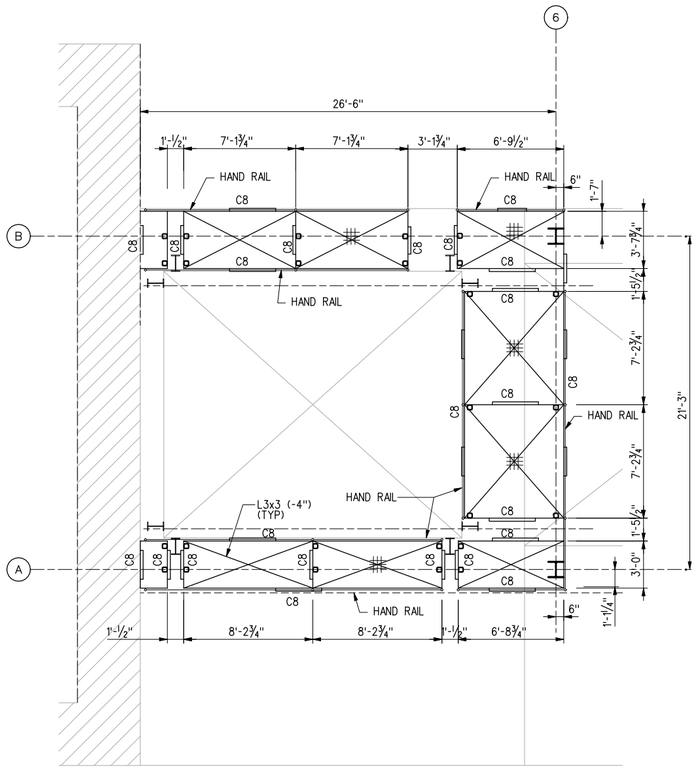

NOTES:
1. C8 = C8x11.5
2. ALL CROSSBRACING TO BE L3x3x1/4
3. USE (2) 3/4" DIA A325 BOLTS @ BOLTED CONNECTION.
4. □= HSS 4x4x1/4
5. BOLT ALL HSS 4x4x1/4 TO T.O.S AT 1205 WITH...

PLAN AT T.O.S. EL. 1207.4

1/4" = 1' - 0" 5' 0 5'

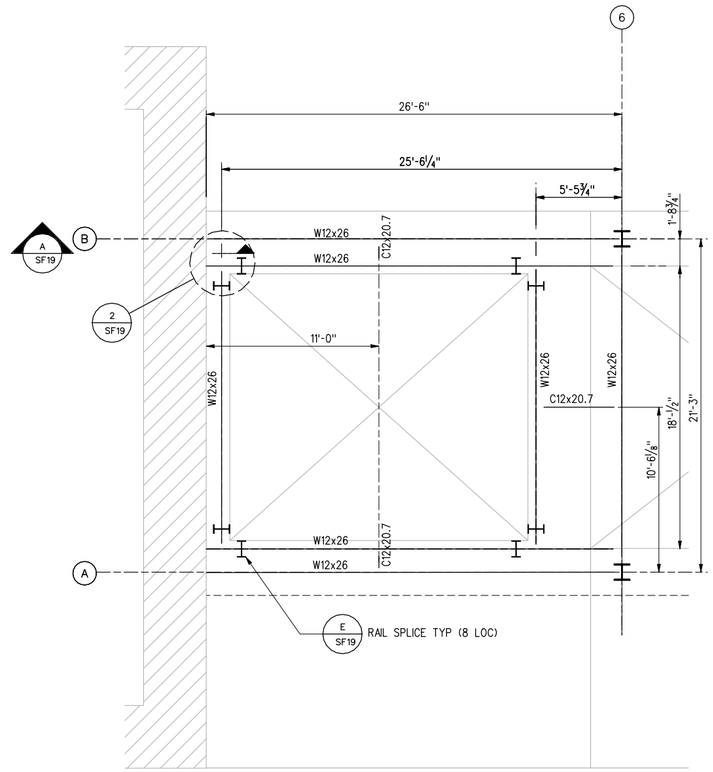

PLAN AT T.O.S. EL. 1218.0

1/4" = 1' - 0" 5' 0 5'

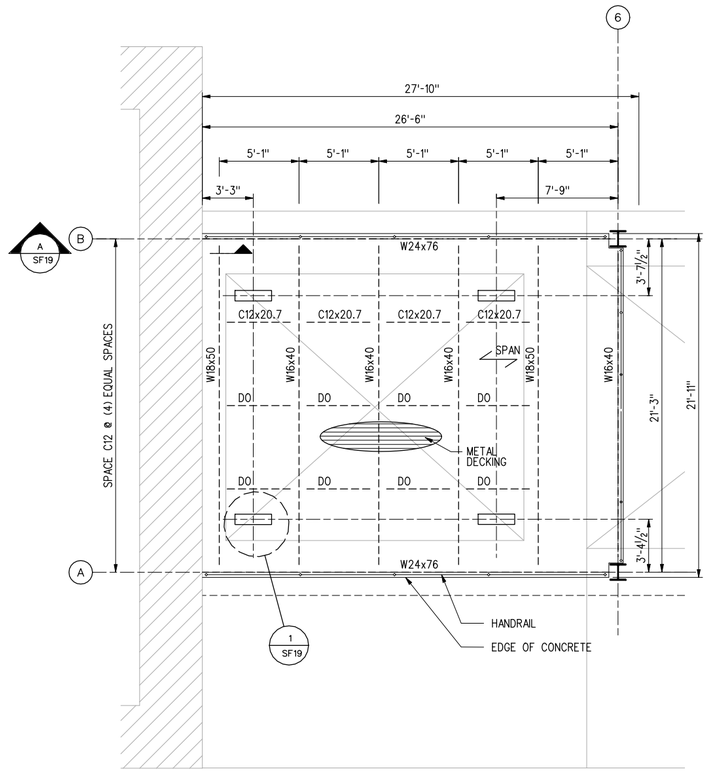

NOTES:
1. METAL DECKING TO BE 18GA 3" DEEP DECK TYPE PLW 3 BY VERCO. SEE DETAIL 2 ON SF17 FOR ATTACHMENT.
2. CONTRACTOR TO COORDINATE EQUIPMENT LOADING & PLACEMENT W/ ENGINEER.

PLAN AT T.O.C. EL. 1228.0

T.O.S. -8.0"

1/4" = 1' - 0" 5' 0 5'

NOTES:
SEE SF17 FOR TYPICAL FRAMING DETAILS AND SF6 FOR TYPICAL STEEL NOTES.

PRELIMINARY
95% SUBMITTAL

US Army Corps of Engineers
Seattle District

Symbol	Description	Date	Appr.
		/ /	

U.S. ARMY ENGINEER DISTRICT, SEATTLE
CORPS OF ENGINEERS
SEATTLE, WASHINGTON
Prepared by: HDR | FISHPRO

Designed by: JLH
Drawn by: Autoscan, Inc.
Checked by: ED
Date: 16 JUN 08
File # E-56-14-19
Rev.

ADDITIONAL WATER STORAGE PROJECT
HOWARD HANSON DAM
GREEN RIVER WASHINGTON

LIFT TOWER FRAMING PLANS II

Plate number: SF13
Sheet of

I:\AECDESIGNS\HHAW\OTHER\HDRINC\2008061\HHSM-SF13.DGN
DATE AND TIME PLOTTED: 8/6/2008 3:07:16 PM DESIGN FILE:

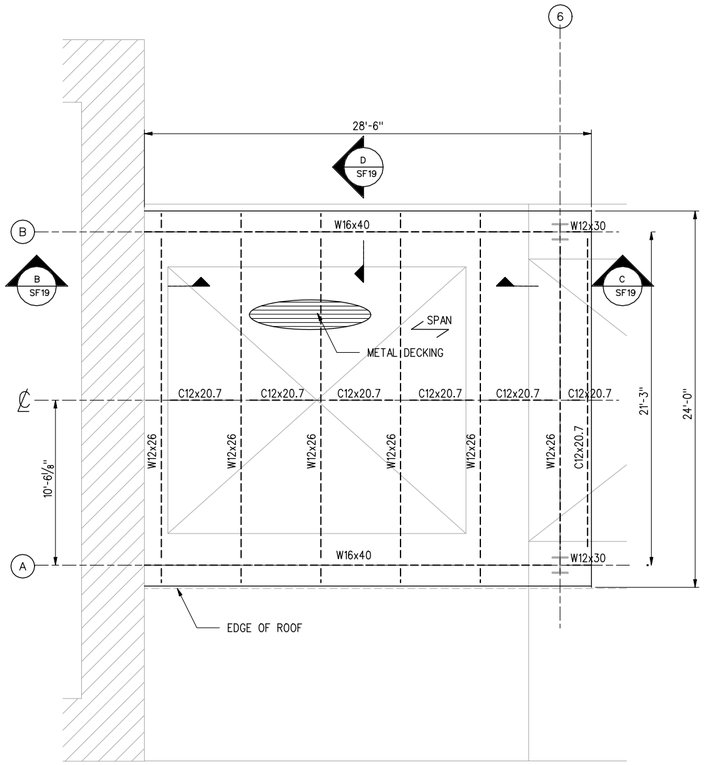

NOTES:
1. METAL DECKING TO BE 20GA PLB-36 BY VERCO.
   SEE DETAIL 2 ON SF17 FOR ATTACHMENT.

TOWER ROOF FRAMING PLAN

1/4" = 1'-0" 5' 0 5'

N

NOTES:
SEE SF17 FOR TYPICAL FRAMING DETAILS AND SF6 FOR TYPICAL STEEL NOTES.

PRELIMINARY
95% SUBMITTAL

US Army Corps of Engineers
Seattle District

Symbol	Description	Date	Appr	Symbol	Description
		/ /			

U.S.ARMY ENGINEER DISTRICT,SEATTLE
CORPS OF ENGINEERS
SEATTLE, WASHINGTON
Prepared by: HDR | FISHPRO

Designed by: JLH
Drawn by: Autoscan, Inc.
Checked by: ED
Date: 16 JUN 08
File • E-56-14-19
Rev.

ADDITIONAL WATER STORAGE PROJECT
HOWARD HANSON DAM
GREEN RIVER WASHINGTON

LIFT TOWER ROOF FRAMING PLAN

Plate number: SF14
Sheet of

DATE AND TIME PLOTTED: 8/6/2008 3:07:24 PM DESIGN FILE: I:\AECDESIGNS\HHAW\OTHER\HDRINC\2008061\SHHSM-SF14.DGN

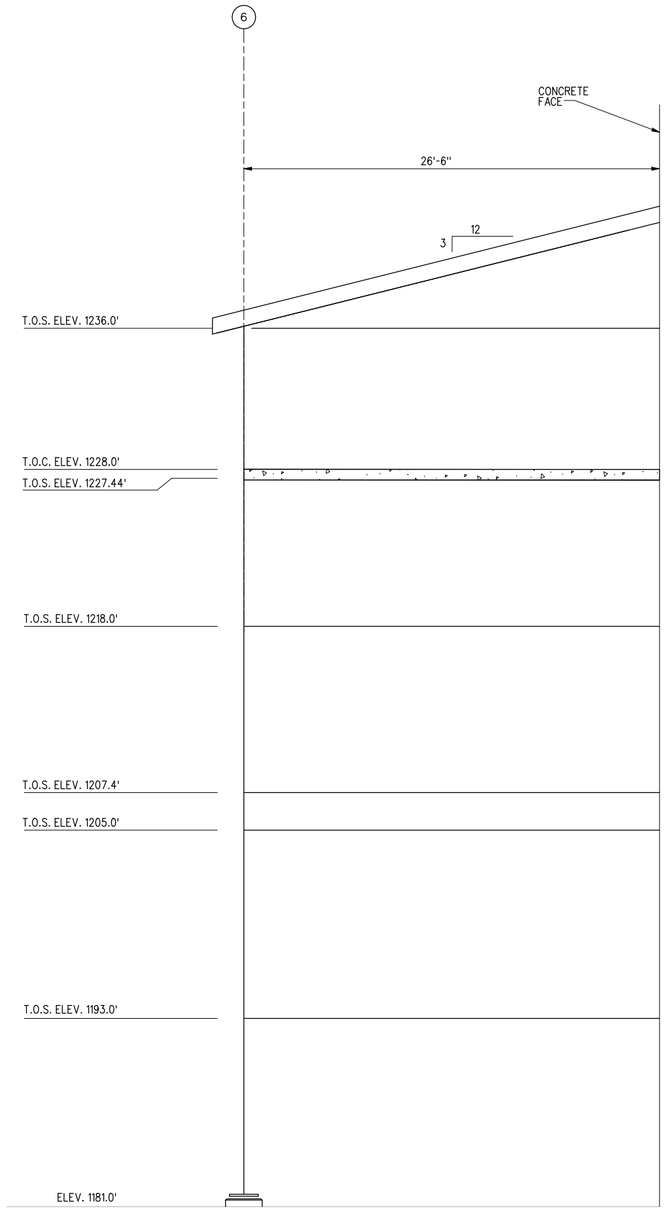

GRID B LOOKING SOUTH

1/4" = 1'-0" 5' 0 5'

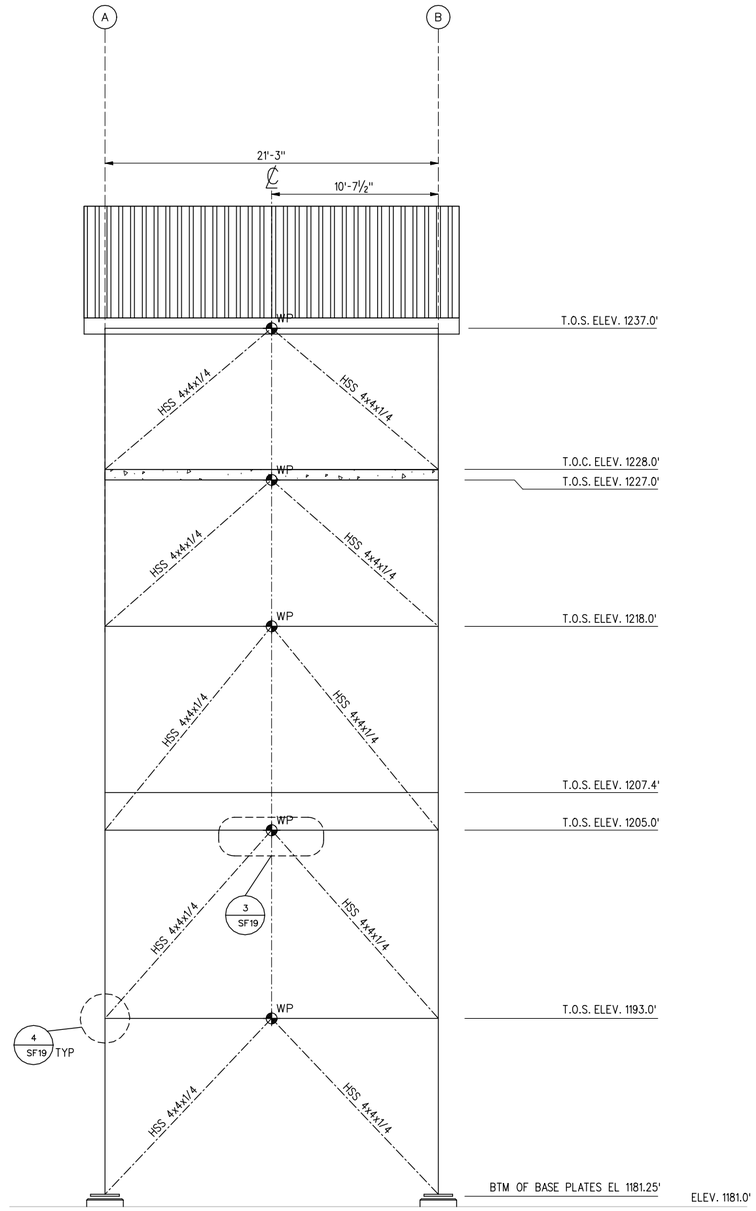

GRID G LOOKING WEST

1/4" = 1'-0" 5' 0 5'

PRELIMINARY
95% SUBMITTAL

US Army Corps of Engineers
Seattle District

Symbol	Description	Date	Appr.	Symbol	Description
		/ /			

Designed by: JLH
Drawn by: Autoscan, Inc.
Checked by: ED
Date: 16 JUN 08
File # E-56-14-19
Rev.

U.S. ARMY ENGINEER DISTRICT, SEATTLE
CORPS OF ENGINEERS
SEATTLE, WASHINGTON

Prepared by: HDR | FISHPRO

ADDITIONAL WATER STORAGE PROJECT
HOWARD HANSON DAM

LIFT TOWER ELEVATIONS

GREEN RIVER WASHINGTON

Plate number: SF15
Sheet of

DATE AND TIME PLOTTED: 8/6/2008 3:07:25 PM DESIGN FILE: I:\AECDESIGNS\HHAW\OTHER\HDRINC\20080615\HHSM-SF15.DGN

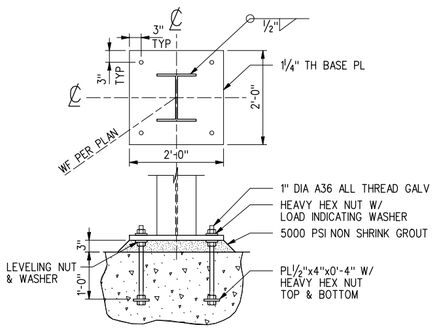

BASE PL DETAIL GRID LINE C (1 SF4)

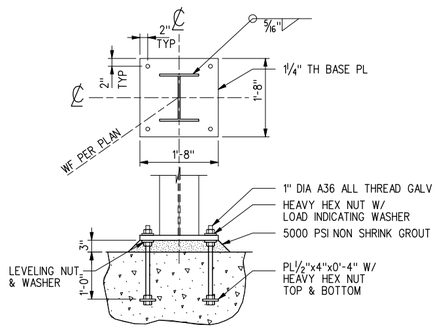

BASE PL DETAIL GRID LINE D (2 SF4)

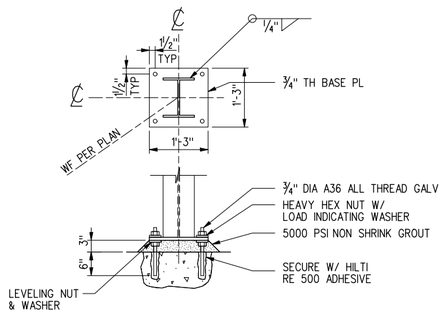

BASE PL DETAIL GRID LINE E (3 SF4)

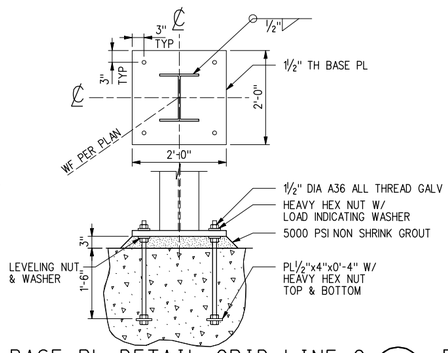

BASE PL DETAIL GRID LINE G (4 SF4)

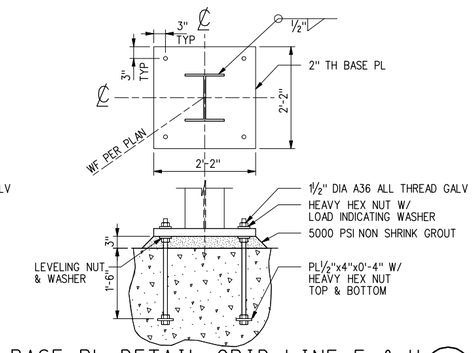

BASE PL DETAIL GRID LINE F & H (5 SF4)

3/4" = 1'-0" 0 1' 2' 3'

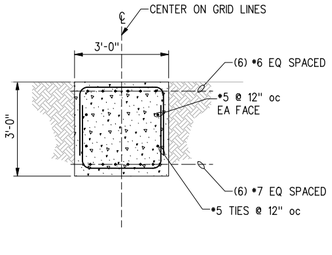

SECTION (A SF4)

1/2" = 1'-0" 12"6" 0 1' 2' 3' 4' 5'

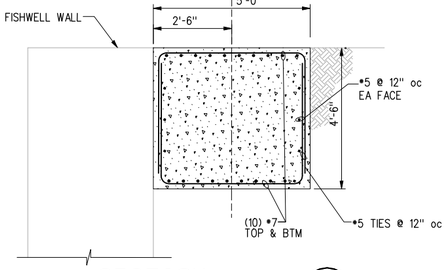

SECTION (B SF4)

1/2" = 1'-0" 12"6" 0 1' 2' 3' 4' 5'

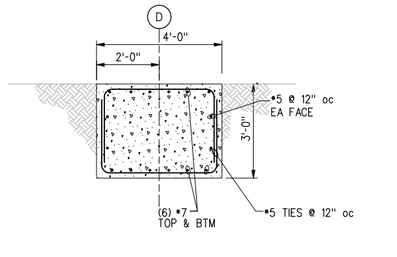

SECTION (C SF4)

1/2" = 1'-0" 12"6" 0 1' 2' 3' 4' 5'

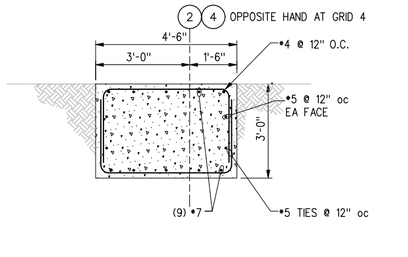

SECTION (D SF4)

1/2" = 1'-0" 12"6" 0 1' 2' 3' 4' 5'

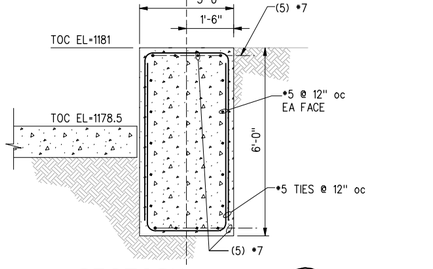

SECTION (E SF4)

•' = 1'-0" 12"6" 0 1' 2' 3' 4' 5'

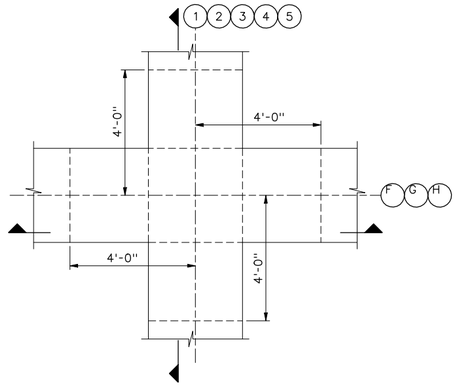

PLAN

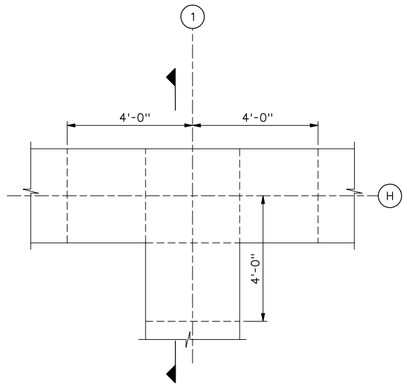

PLAN

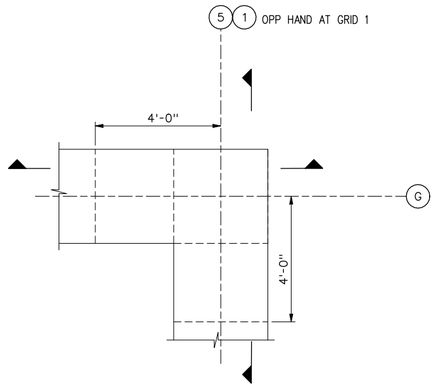

PLAN

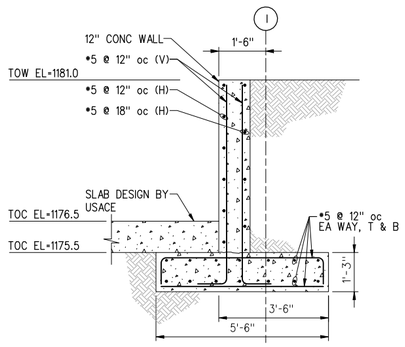

SECTION (F SF4)

•' = 1'-0" 12"6" 0 1' 2' 3' 4' 5'

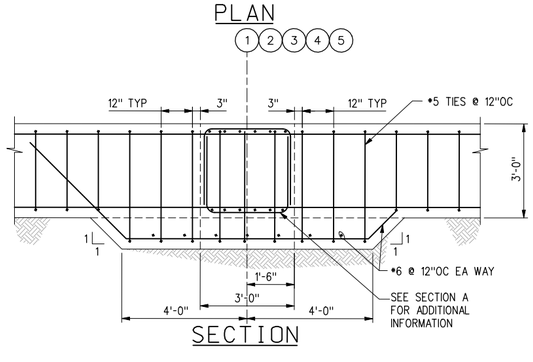

SECTION

TYP DETAIL @ GRADE BEAM INTERSECTIONS

•' = 1'-0" 12"6" 0 1' 2' 3' 4' 5'

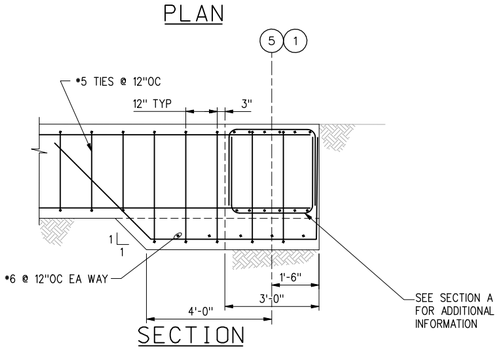

SECTION

TYP DETAIL @ GRADE BEAM INTERSECTIONS

•' = 1'-0" 12"6" 0 1' 2' 3' 4' 5'

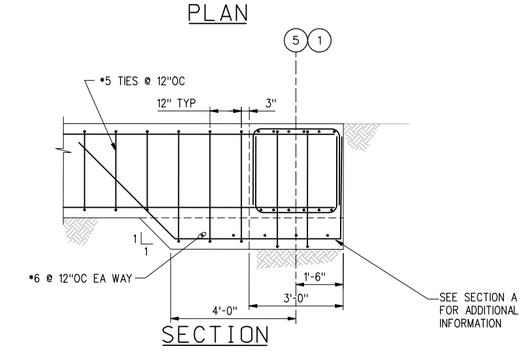

SECTION

TYP DETAIL @ GRADE BEAM INTERSECTIONS

•' = 1'-0" 12"6" 0 1' 2' 3' 4' 5'

PRELIMINARY 95% SUBMITTAL

US Army Corps of Engineers
Seattle District

Symbol	Description	Date	Appr.	Symbol	Description
		/ /			

Designed by: JLH
Drawn by: Autoscan, Inc.
Checked by: ED
Date: 16 JUN 08
File # E-56-14-19
Rev.

U.S.ARMY ENGINEER DISTRICT,SEATTLE
CORPS OF ENGINEERS
SEATTLE, WASHINGTON
Prepared by: HDR | FISHPRO

ADDITIONAL WATER STORAGE PROJECT
HOWARD HANSON DAM
STRUCTURAL FOUNDATION DETAILS
GREEN RIVER WASHINGTON

Plate number: SF16
Sheet of

DATE AND TIME PLOTTED: 8/6/2008 3:07:33 PM DESIGN FILE: I:\AECDESIGNS\HHAW\OTHER\HDRINC\20080619\HHSM-SF16.DGN

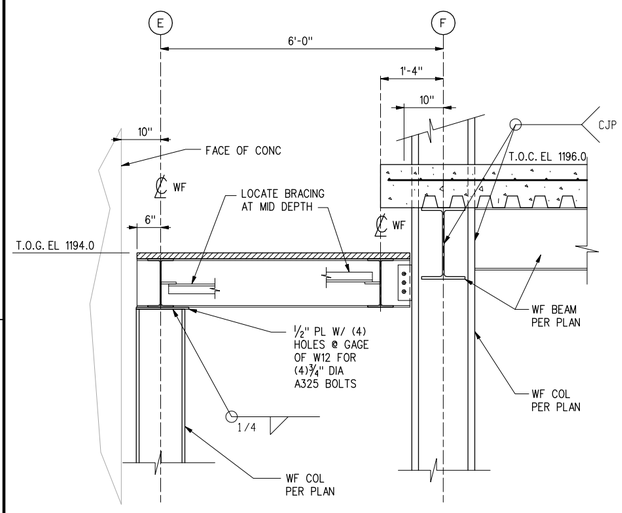

SECTION A SF7

¾" = 1'-0"

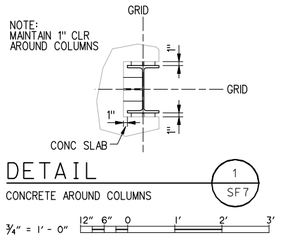

DETAIL 1 SF7

CONCRETE AROUND COLUMNS

¾" = 1'-0"

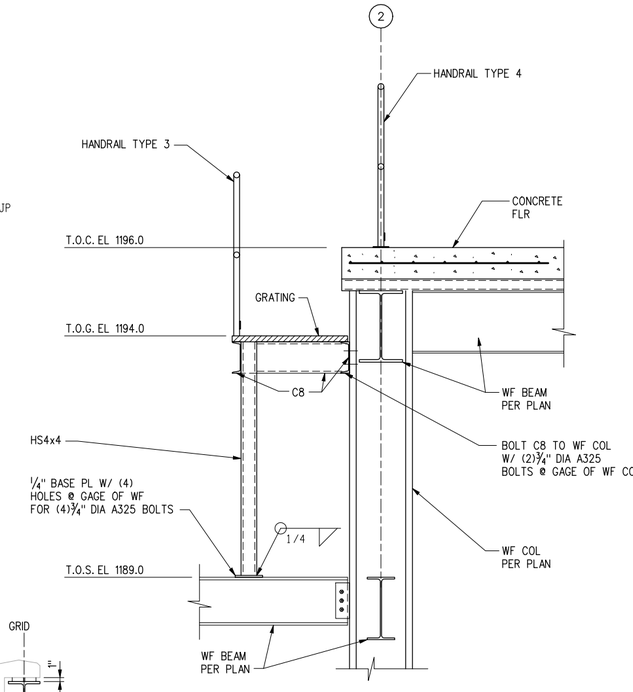

SECTION B SF7

¾" = 1'-0"

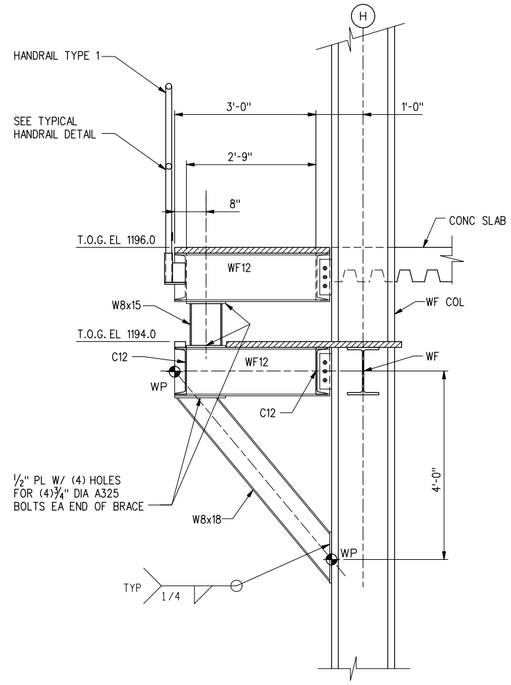

SECTION C SF7

¾" = 1'-0"

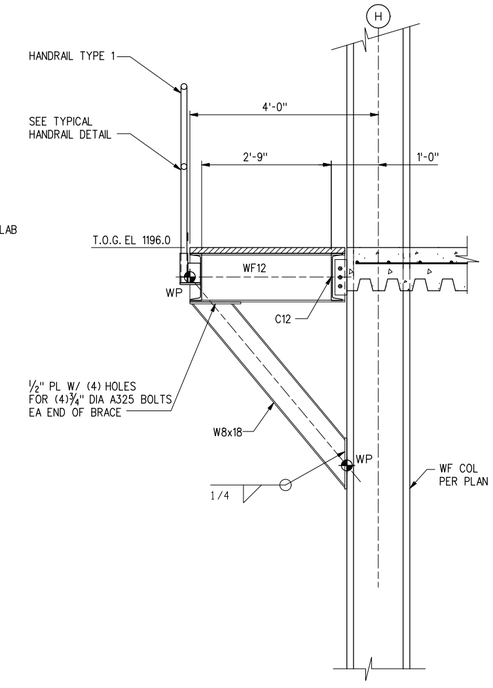

SECTION D SF7

¾" = 1'-0"

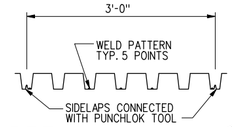

DETAIL 2 SF7

1" = 1'-0"

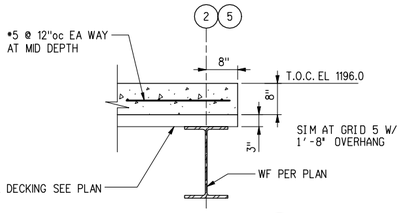

SECTION E SF7

¾" = 1'-0"

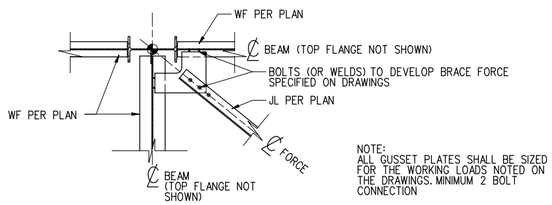

TYPICAL PLAN BRACING CONNECTION

¾" = 1'-0"

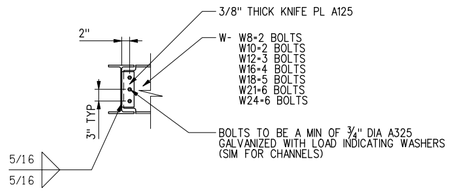

TYPICAL WF CONNECTIONS

¾" = 1'-0"

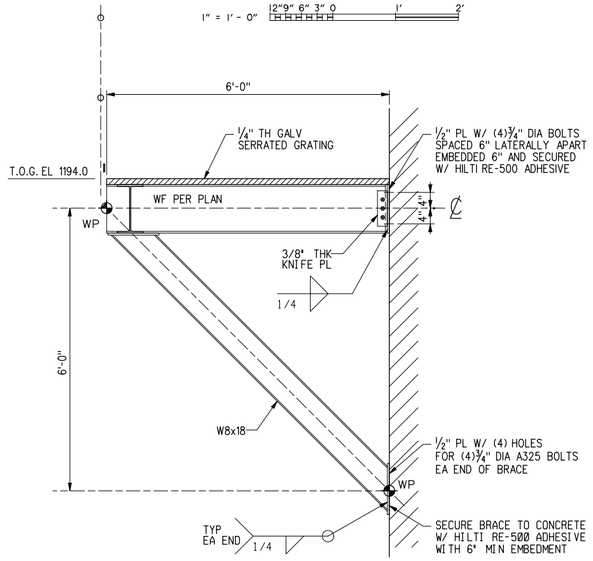

SECTION H SF7

¾" = 1'-0"

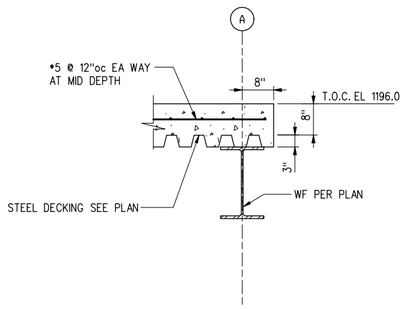

SECTION F SF7

¾" = 1'-0"

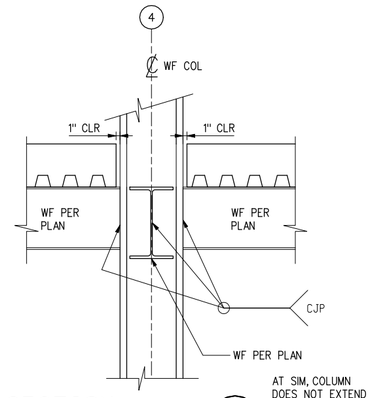

SECTION G SF7

¾" = 1'-0"

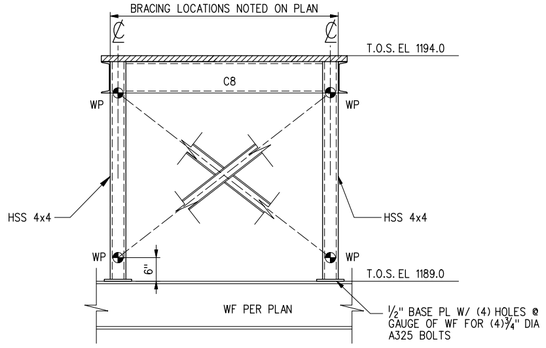

TYPICAL BRACING SECTION

¾" = 1'-0"

PRELIMINARY 95% SUBMITTAL

US Army Corps of Engineers
Seattle District

Symbol	Description	Appr.	Date
		/	/

Designed by: JLH
Drawn by: Autoscan, Inc.
Checked by: ED
Date: 16 JUN 08
File: E-56-14-19
Rev.

U.S.ARMY ENGINEER DISTRICT,SEATTLE CORPS OF ENGINEERS
SEATTLE, WASHINGTON
Prepared by: HDR | FISHPRO

ADDITIONAL WATER STORAGE PROJECT
HOWARD HANSON DAM
GREEN RIVER WASHINGTON

STRUCTURAL FRAMING DETAILS I

Plate number: SF17
Sheet of

DATE AND TIME PLOTTED: 8/6/2008 3:07:36 PM DESIGN FILE: I:\AECDESIGNS\HHAM\OTHER\HDRINC\2008061F\VHHSM-SF17.DGN

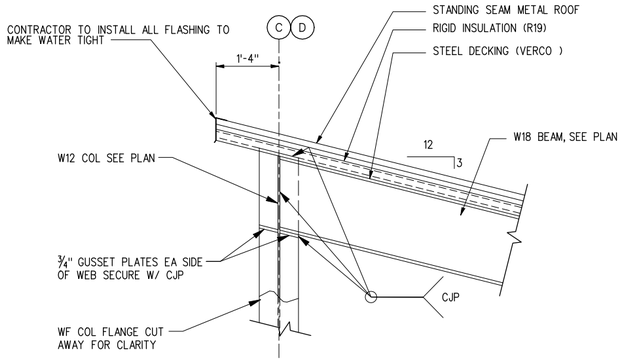

SECTION A SF9

¾" = 1'-0"

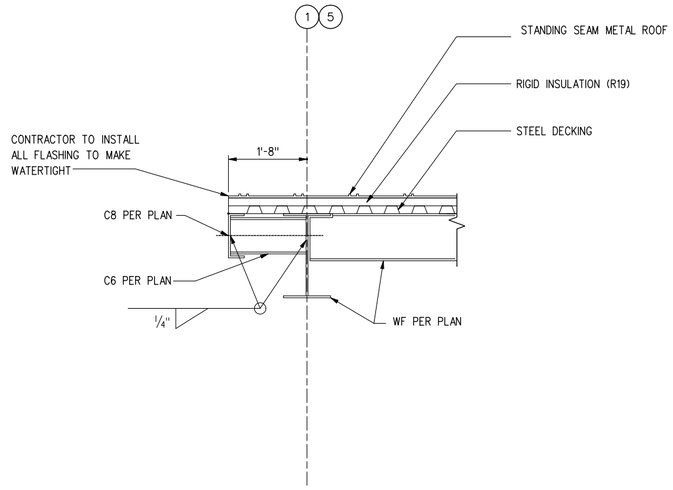

SECTION B SF9

¾" = 1'-0"

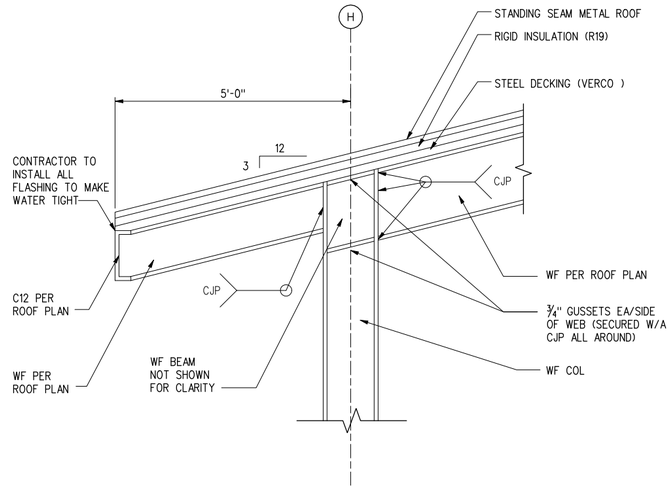

SECTION C SF9

¾" = 1'-0"

SECTION D SF9

¾" = 1'-0"

SECTION E SF9

¾" = 1'-0"

SECTION F SF9

1" = 1'-0"

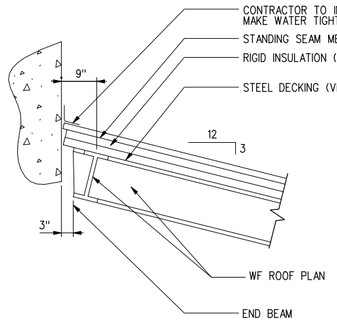

SECTION G SF9

¾" = 1'-0"

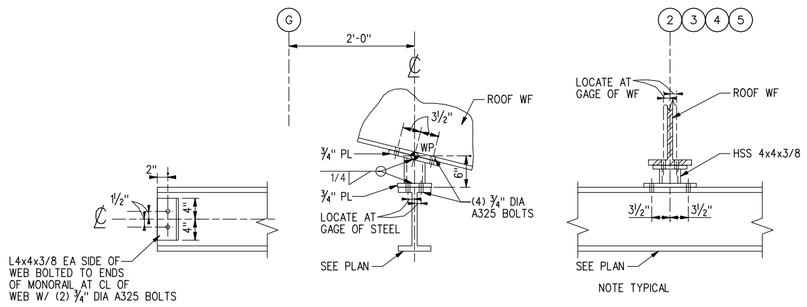

SECTION H SF9

1" = 1'-0"

PRELIMINARY
95% SUBMITTAL

US Army Corps of Engineers
Seattle District

Symbol	Description	Date
Appr.		/ /

U.S.ARMY ENGINEER DISTRICT,SEATTLE
CORPS OF ENGINEERS
SEATTLE, WASHINGTON

Prepared by: HDR | FISHPRO

Designed by: JLH
Drawn by: Autoscan, Inc.
Checked by: ED
Date: 16 JUN 08
File • E-56-14-19
Rev.

ADDITIONAL WATER STORAGE PROJECT
HOWARD HANSON DAM
STRUCTURAL FRAMING DETAILS II
GREEN RIVER WASHINGTON

Plate number:
SF18
Sheet of

DATE AND TIME PLOTTED: 8/6/2008 3:07:45 PM DESIGN FILE: I:\AECDESIGNS\HHAM\OTHER\HDRINC\20080611\VHSM-SF18.DGN

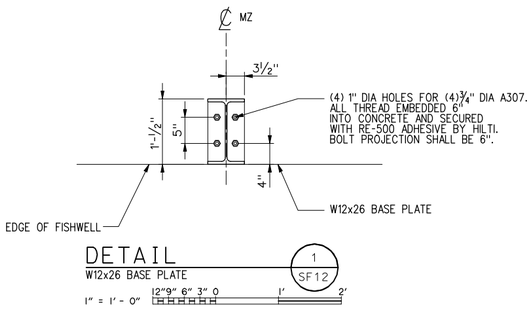

DETAIL 1 SF12
W12x26 BASE PLATE
1" = 1'-0"

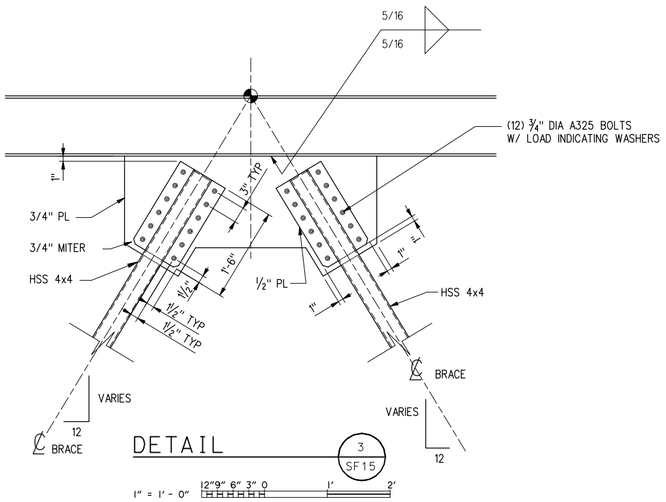

DETAIL 3 SF15
1" = 1'-0"

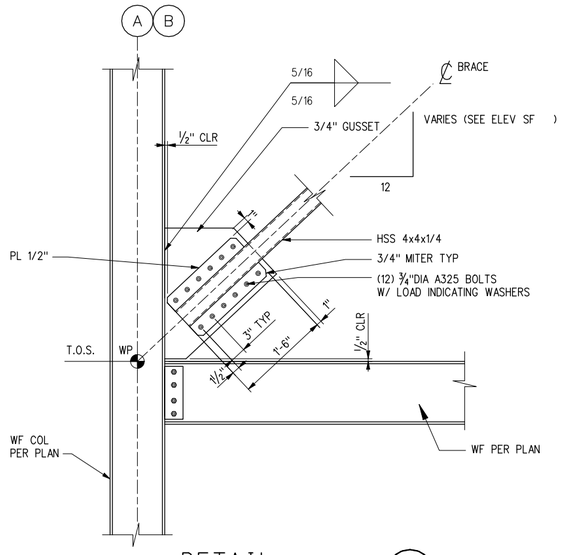

DETAIL 4 SF15
1" = 1'-0"

NOTE:
1. AT GRID B, OPPOSITE HAND
2. SIM ø BASE PL EXCEPTION, NO HORIZONTAL BEAM

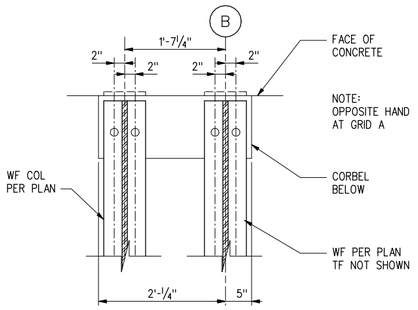

DETAIL 2 SF12
1" = 1'-0"

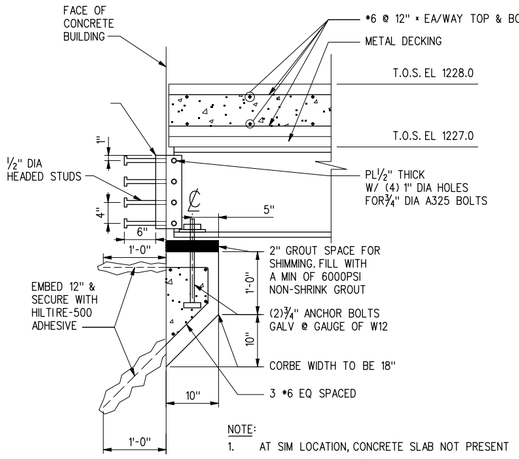

NOTE:
1. AT SIM LOCATION, CONCRETE SLAB NOT PRESENT

SECTION A SF12, SF13
1" = 1'-0"

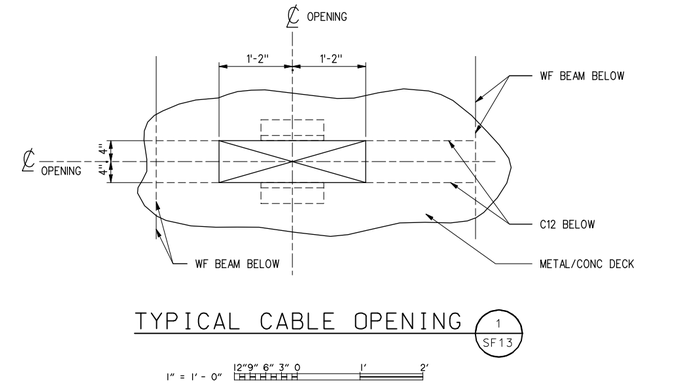

TYPICAL CABLE OPENING 1 SF13
1" = 1'-0"

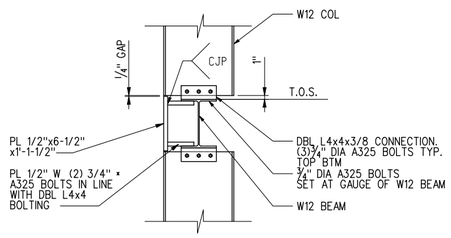

SECTION E SF12, SF13
¾" = 1'-0"

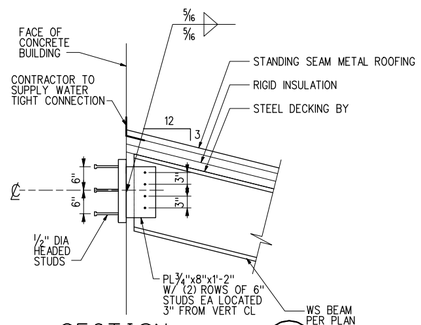

SECTION B SF14
¾" = 1'-0"

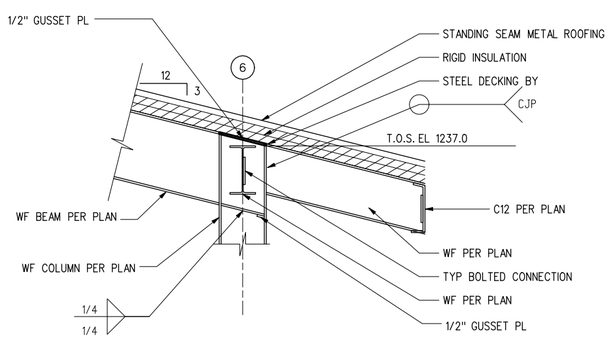

SECTION C SF14
¾" = 1'-0"

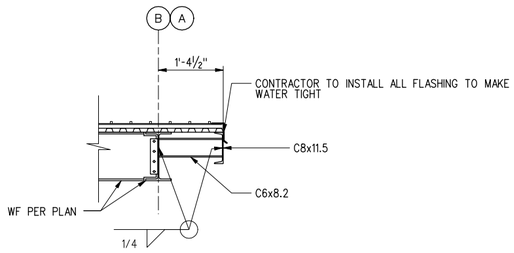

NOTE:
1. AT GRID A, OPPOSITE HAND

SECTION D SF14
¾" = 1'-0"

PRELIMINARY
95% SUBMITTAL

US Army Corps of Engineers
Seattle District

Symbol	Description	Date
Appr.	Symbol	
		/ /
	Description	

Date: 16 JUN 08
File • E-56-14-19
Rev.
Designed by: JLH
Drawn by: Autoscon, Inc.
Checked by: ED

U.S.ARMY ENGINEER DISTRICT SEATTLE
CORPS OF ENGINEERS
SEATTLE, WASHINGTON
Prepared by: HDR | FISHPRO

ADDITIONAL WATER STORAGE PROJECT
HOWARD HANSON DAM
GREEN RIVER WASHINGTON

STRUCTURAL FRAMING DETAILS III

Plate number: SF19
Sheet of

DATE AND TIME PLOTTED: 8/6/2008 3:07:53 PM DESIGN FILE: I:\AECDESIGNS\HHAM\OTHER\HDRINC\2008061F\HHSM-SF19.DGN

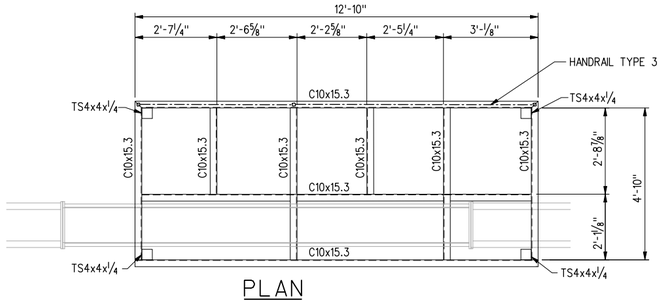

PLAN

½" = 1'-0"

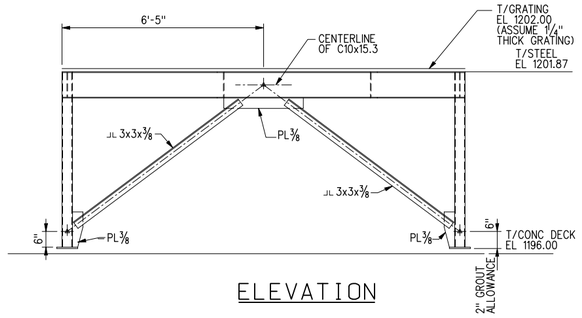

ELEVATION

½" = 1'-0"

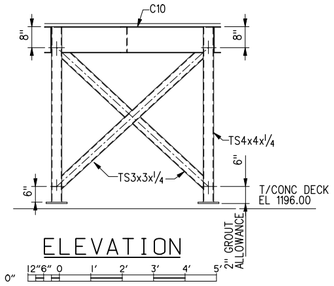

ELEVATION

½" = 1'-0"

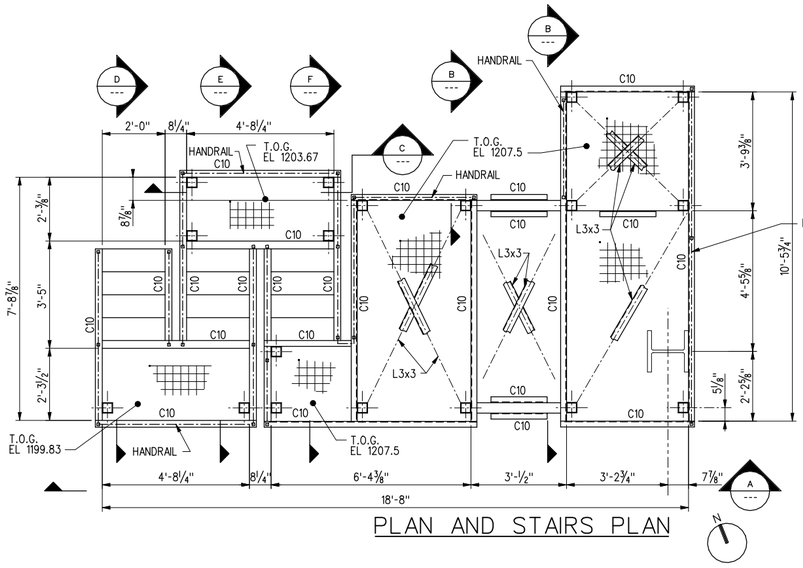

PLAN AND STAIRS PLAN

½" = 1'-0"

NOTES:
C10 = C10x15.3
⊞ = HSS4x4x1/4
L3x3 = L3x3x1/4 LOCATED AT MID DEPTH OF C10
HANDRAIL SHALL BE TYPE 3

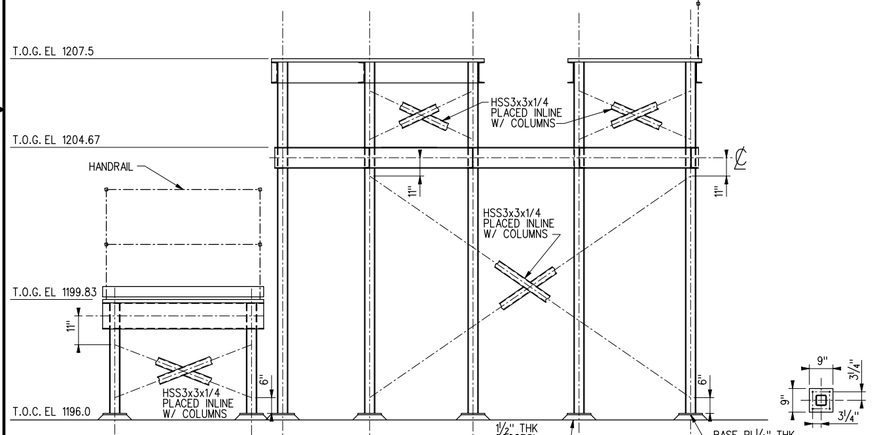

SECTION A

½" = 1'-0"

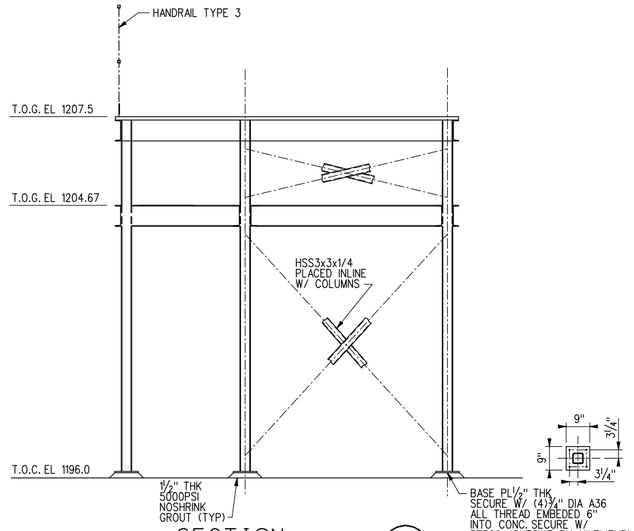

SECTION B

½" = 1'-0"

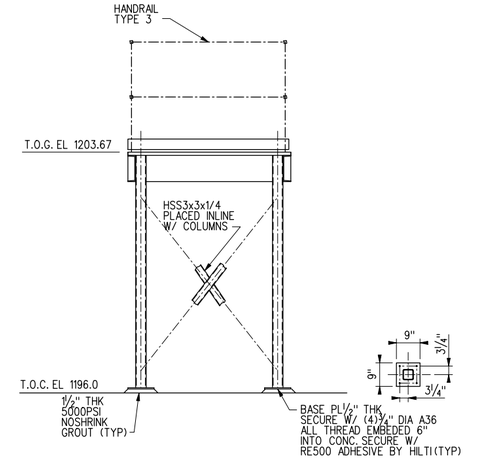

SECTION C

½" = 1'-0"

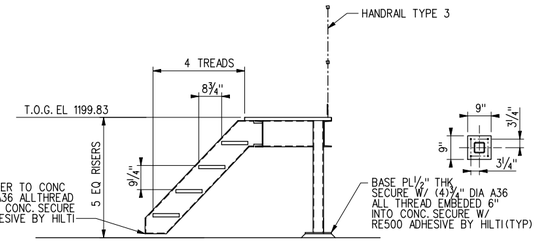

SECTION D

½" = 1'-0"

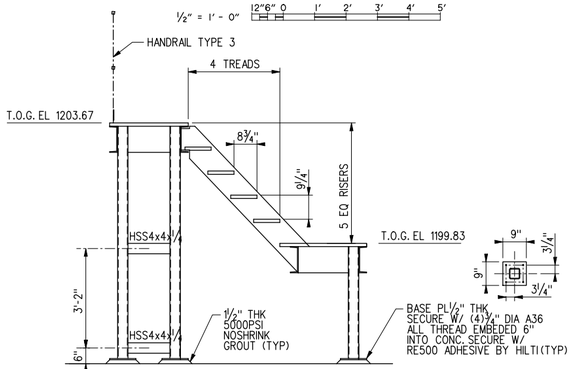

SECTION E

½" = 1'-0"

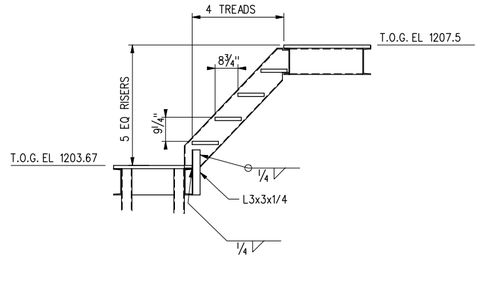

SECTION F

½" = 1'-0"

PRELIMINARY
95% SUBMITTAL

US Army Corps of Engineers
Seattle District

Symbol	Description	Appr.	Date
		/	/

Designed by: ULH
Drawn by: Autoscon, Inc.
Checked by: ED
Date: 16 JUN 08
File: E-56-14-19
Rev.

U.S.ARMY ENGINEER DISTRICT SEATTLE
CORPS OF ENGINEERS
SEATTLE, WASHINGTON
Prepared by: HDR | FISHPRO

ADDITIONAL WATER STORAGE PROJECT
HOWARD HANSON DAM
GREEN RIVER WASHINGTON

MISCELLANEOUS STRUCTURAL DETAILS I

Plate number: SF20
Sheet of

DATE AND TIME PLOTTED: 8/6/2008 3:08:01 PM DESIGN FILE: I:\AECDESIGNS\HHAW\OTHER\HDRINC\2008061F\VHSM-SF20.DGN

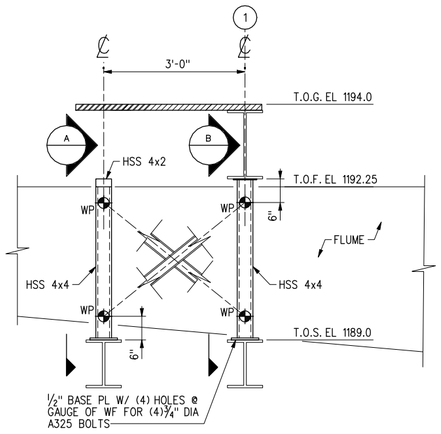

BRACING SECTION ?

¾" = 1'-0"

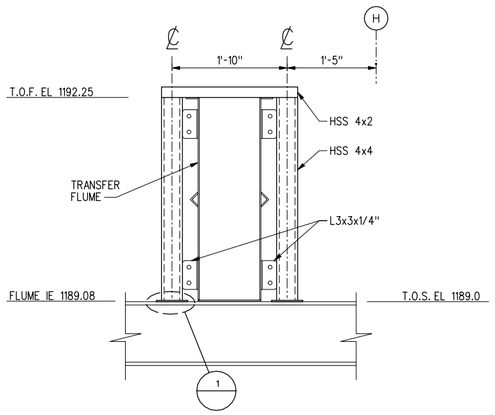

SECTION A SF21, MF16

1" = 1'-0"

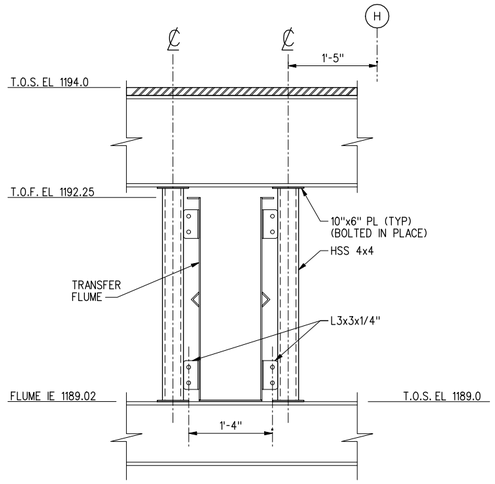

SECTION B SF21, MF16

1" = 1'-0"

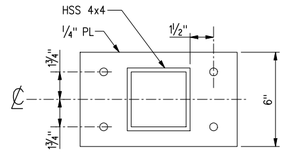

DETAIL 1

3" = 1'-0"

PRELIMINARY
95% SUBMITTAL

US Army Corps of Engineers
Seattle District

Symbol	Description	Date	Appr.	Description
		/ /		

U.S.ARMY ENGINEER DISTRICT,SEATTLE
CORPS OF ENGINEERS
SEATTLE, WASHINGTON

Prepared by: HDR | FISHPRO

Designed by: JEH
Drawn by: Autoscan, Inc.
Checked by:
Date: 16 JUN 08
File • E-56-14-19
Rev.

ADDITIONAL WATER STORAGE PROJECT
HOWARD HANSON DAM
MISCELLANEOUS STRUCTURAL DETAILS II
GREEN RIVER WASHINGTON

Plate number:
SF 21
Sheet of

DATE AND TIME PLOTTED: 8/6/2008 3:08:08 PM DESIGN FILE: I:\AECDESIGNS\HHAW\OTHER\HDRINC\2008061\SHHSM-SF21.DGN

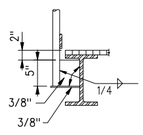

TYPE - 1

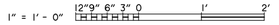

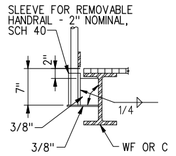

TYPE - 2

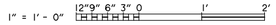



TYPE - 3

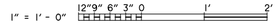

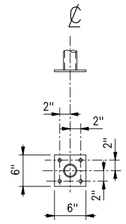

TYPE - 4

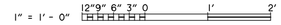

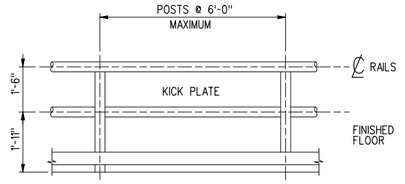

TYP HANDRAIL SPACING

NOTE:
CHECK ALL LAYOUT DRAWINGS FOR INTERFERENCE BETWEEN HANDRAIL & BRACING OR EQUIPMENT, ETC.

NOTES:
1.) HANDRAIL & POSTS TO BE 1-1/2" DIA SCHEDULE 40 STAINLESS STEEL PIPE
2.) WELDED CONSTRUCTION.
3.) ALL SHARP CORNERS & ROUGH EDGES TO BE GROUND SMOOTH AFTER FABRICATION.

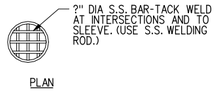

PLAN

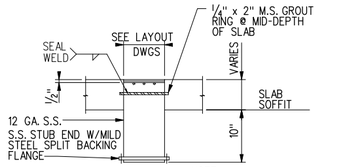

ELEVATION
TYPE - 2

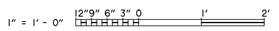

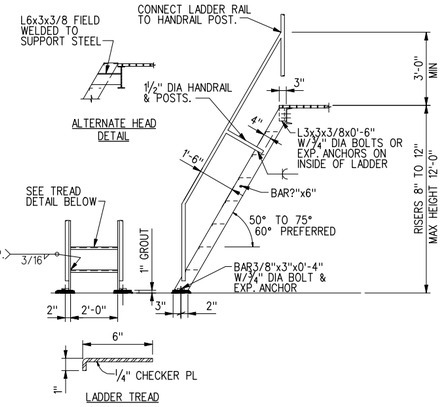

ALTERNATE HEAD DETAIL

LADDER TREAD

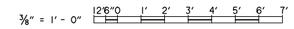

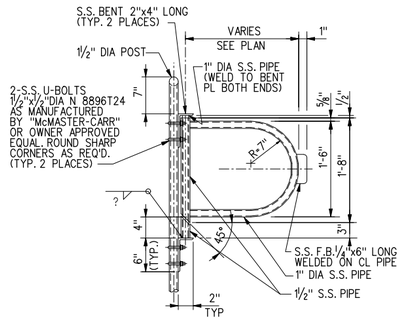

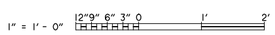

PRELIMINARY
95% SUBMITTAL

US Army Corps of Engineers
Seattle District

Symbol	Description	Date	Appr.	Symbol	Description
		/ /			

U.S.ARMY ENGINEER DISTRICT,SEATTLE
CORPS OF ENGINEERS
SEATTLE, WASHINGTON

Prepared by: HDR | FISHPRO

Designed by: JEH
Drawn by: Autoscan, Inc.
Checked by: ED
Date: 16 JUN 08
File #: E-56-14-19
Rev.

ADDITIONAL WATER STORAGE PROJECT
HOWARD HANSON DAM
GREEN RIVER WASHINGTON

MISCELLANEOUS STRUCTURAL DETAILS III

Plate number:
SF22
Sheet of

DATE AND TIME PLOTTED: 8/6/2008 3:08:10 PM DESIGN FILE: I:\AECDESIGNS\HHAW\OTHER\HDRINC\20080611\VHSM-SF22.DGN

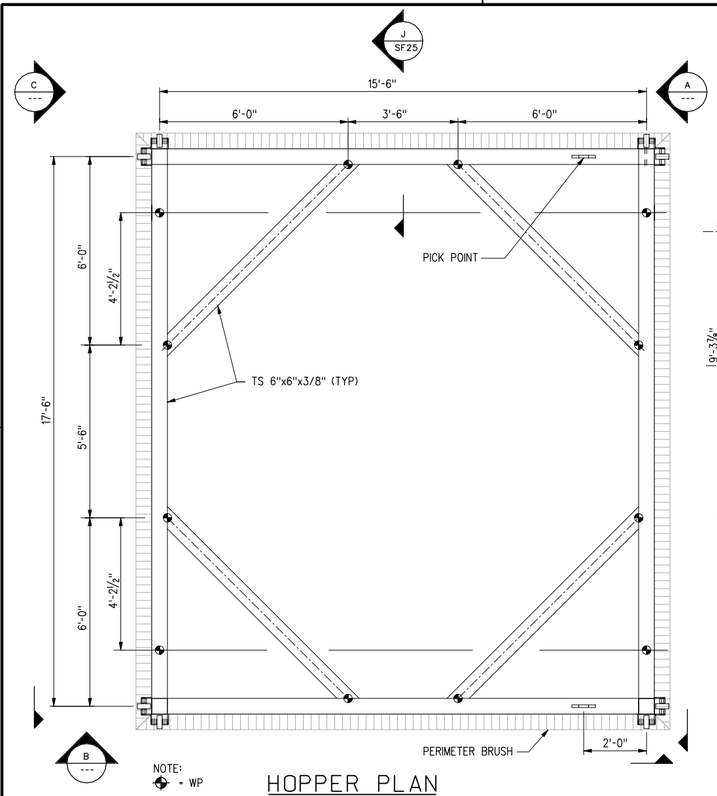

HOPPER PLAN

½" = 1' - 0"

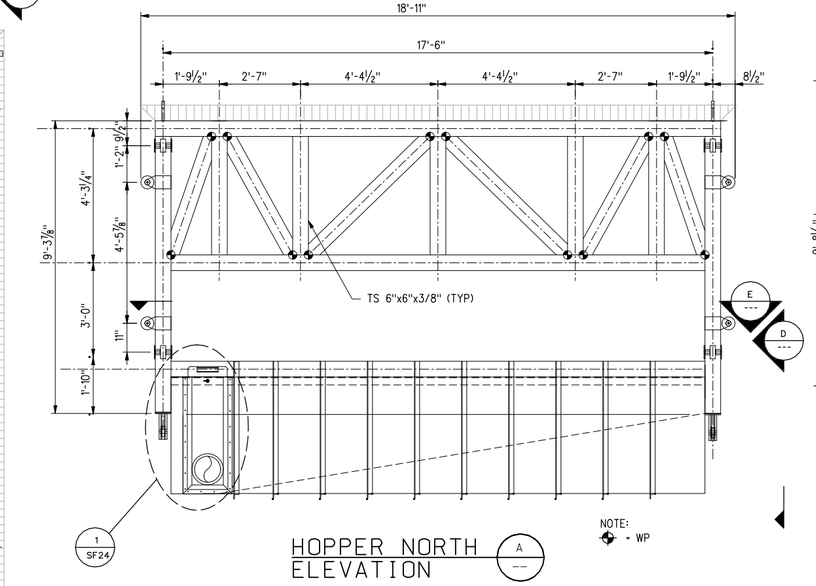

HOPPER NORTH ELEVATION A

½" = 1' - 0"

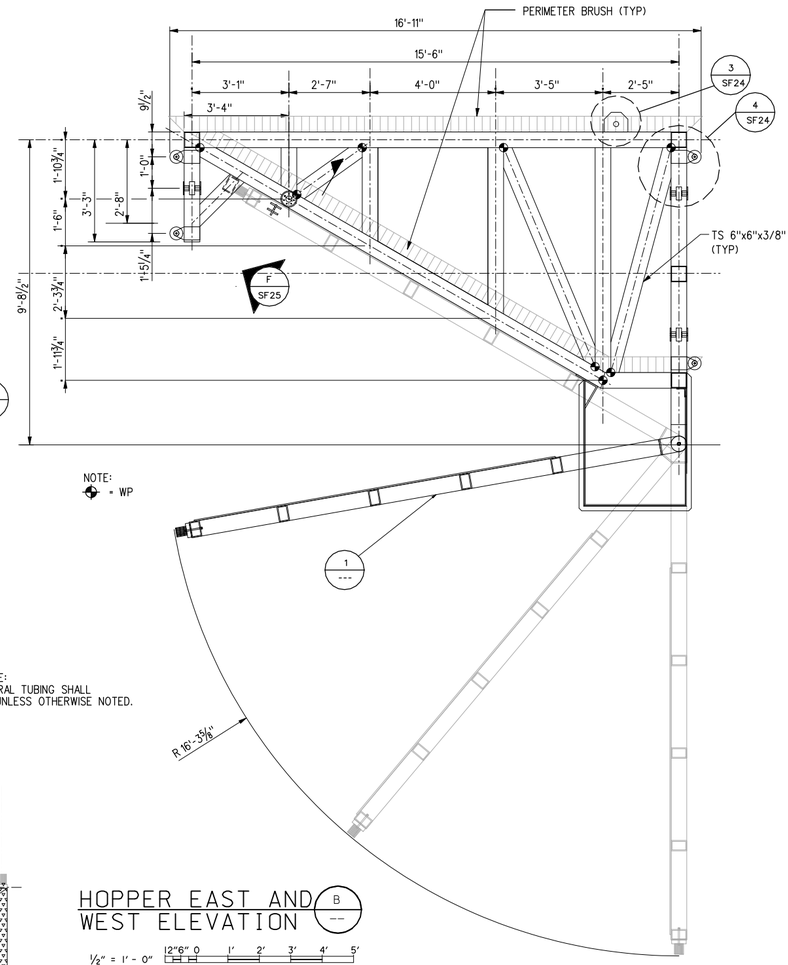

GENERAL NOTE:
ALL STRUCTURAL TUBING SHALL
BE HSS 316 UNLESS OTHERWISE NOTED.

HOPPER EAST AND WEST ELEVATION B

½" = 1' - 0"

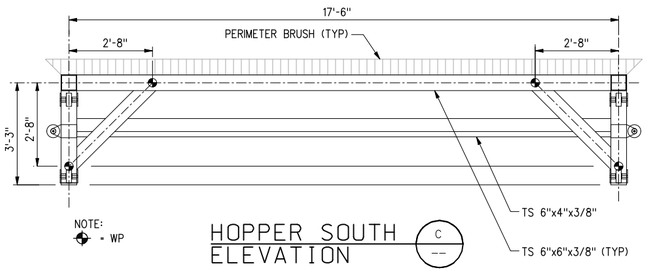

HOPPER SOUTH ELEVATION C

½" = 1' - 0"

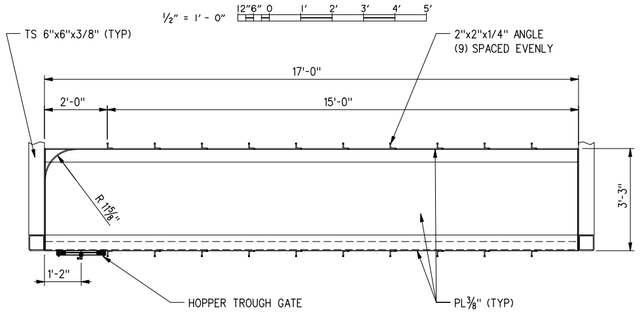

HOPPER BUCKET PLAN E

½" = 1' - 0"

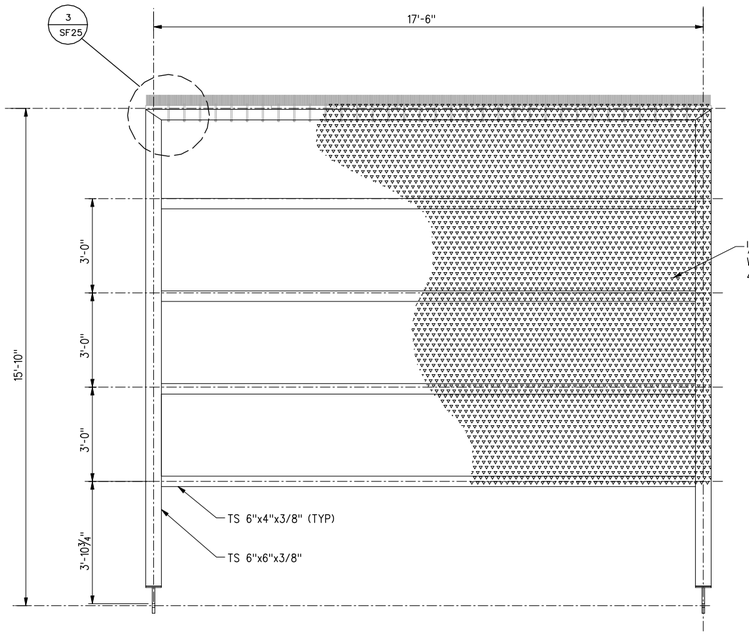

HOPPER DETAIL SWING BOTTOM 1

½" = 1' - 0"

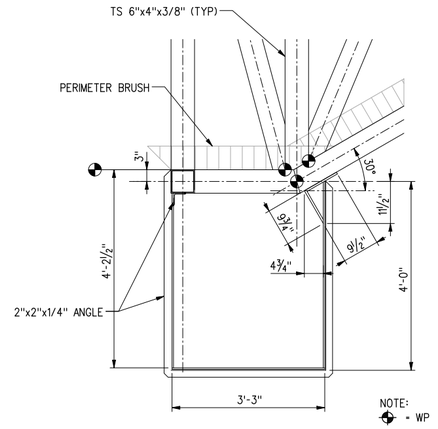

HOPPER BUCKET ELEVATION D

¾" = 1' - 0"

PRELIMINARY
95% SUBMITTAL

US Army Corps of Engineers
Seattle District

Symbol	Description	Appr.	Date
			/ /

Designed by: JLH
Drawn by: Autoscan, Inc.
Checked by: ED
Date: 16 JUN 08
File #: E-56-14-19
Rev.

U.S.ARMY ENGINEER DISTRICT,SEATTLE
CORPS OF ENGINEERS
SEATTLE, WASHINGTON
Prepared by: HDR | FISHPRO

ADDITIONAL WATER STORAGE PROJECT
HOWARD HANSON DAM
GREEN RIVER

LIFT HOPPER STRUCTURAL PLAN, SECTIONS AND DETAILS

WASHINGTON

Plate number:
SF23
Sheet of

DATE AND TIME PLOTTED: 8/6/2008 3:08:18 PM DESIGN FILE: I:\AECDESIGNS\HHAW\OTHER\HDRINC\20080611\VHSM-SF23.DGN

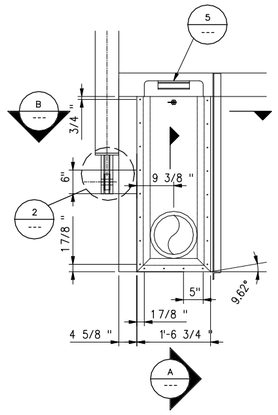

DETAIL 1 / SF23

3/4" = 1'-0"

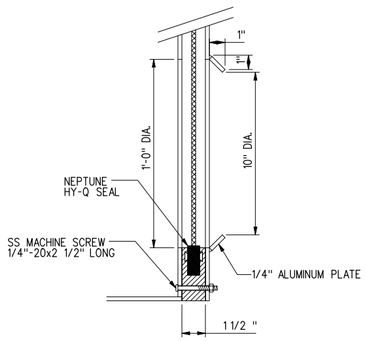

SECTION A / --

3" = 1'-0"

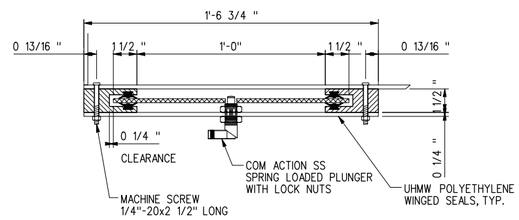

GATE SECTION B / --

3" = 1'-0"

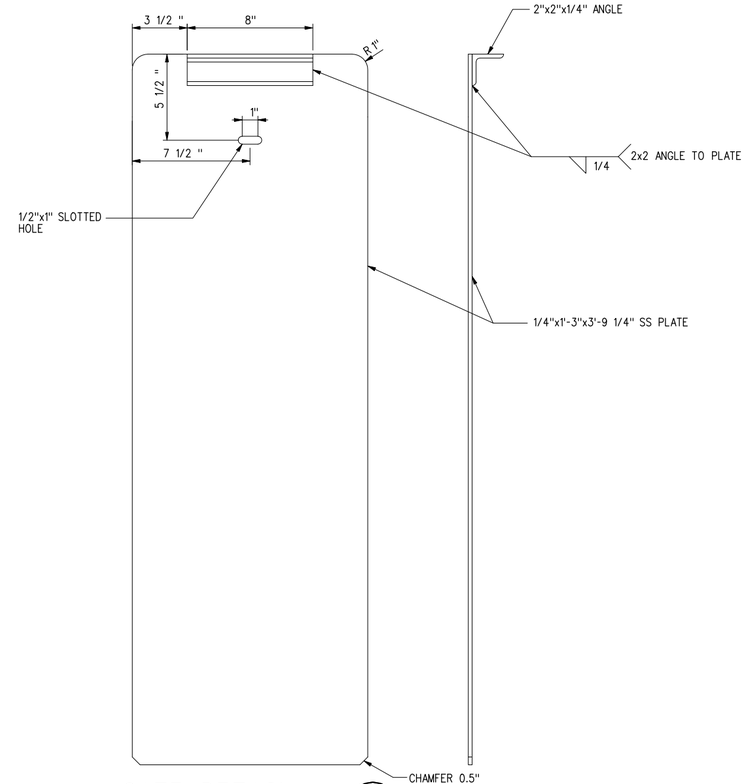

GATE DETAIL 5 / --

3" = 1'-0"

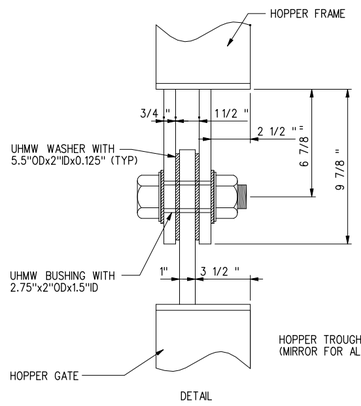

DETAIL

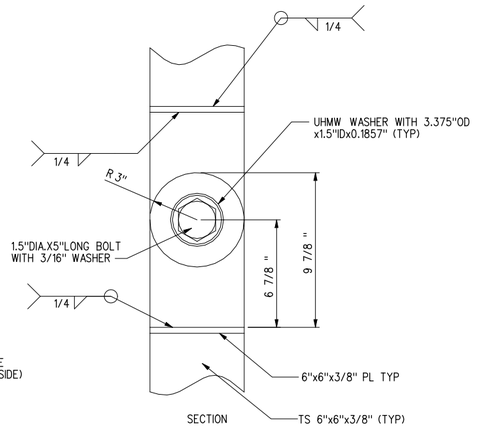

SECTION

HINGE DETAIL 2 / --

3" = 1'-0"

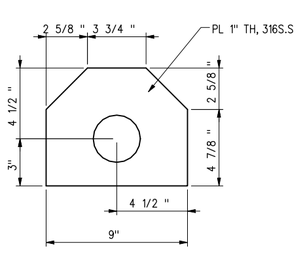

HOPPER FRAME PICK POINT 3 / SF23

3" = 1'-0"

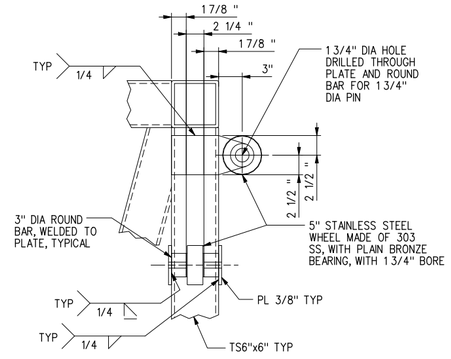

HOPPER DETAIL 4 / SF23

1½" = 1'-0"

PRELIMINARY
95% SUBMITTAL

US Army Corps of Engineers
Seattle District

Symbol	Description	Appr.	Date
			/ /

Designed by: JLH
Drawn by: Autoscan, Inc.
Checked by: ED
Date: 16 JUN 08
File • E-56-14-19
Rev.

U.S.ARMY ENGINEER DISTRICT,SEATTLE
CORPS OF ENGINEERS
SEATTLE, WASHINGTON
Prepared by: HDR | FISHPRO

ADDITIONAL WATER STORAGE PROJECT
HOWARD HANSON DAM
GREEN RIVER WASHINGTON

LIFT HOPPER PLANS AND SECTIONS

Plate number: SF24
Sheet of

DATE AND TIME PLOTTED: 8/6/2008 3:08:23 PM DESIGN FILE: I:\AECDESIGNS\HHAW\OTHER\HDRINC\20080611\VHHSM-SF24.DGN

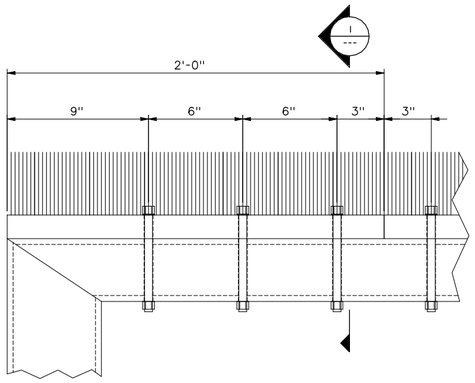

HOPPER DETAIL 3 / SF23

3" = 1'-0" 1" 0 3" 6" 9" 12"

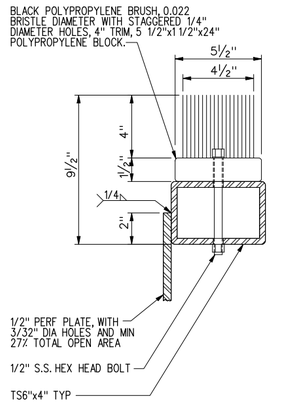

HOPPER SECTION I / --

3" = 1'-0" 1" 0 3" 6" 9" 12"

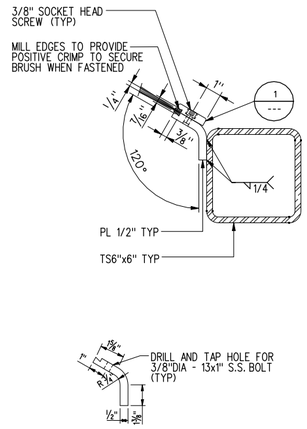

NOTE: BRUSH TO BE CONTINUOUS AROUND PERIMETER OF HOPPER.

HOPPER SECTION J / SF23

3" = 1'-0" 1" 0 3" 6" 9" 12"

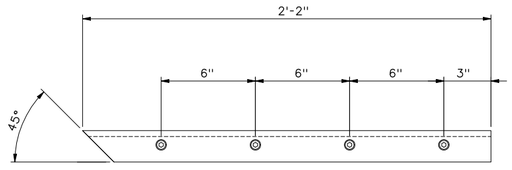

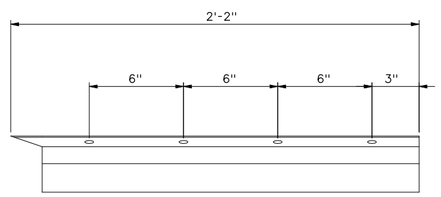

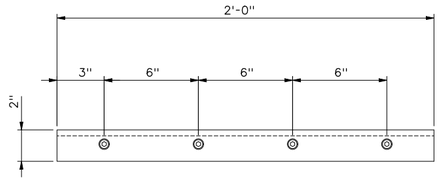

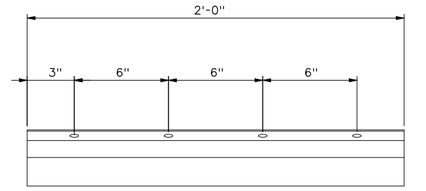

HOPPER DETAIL 1 / --

3" = 1'-0" 1" 0 3" 6" 9" 12"

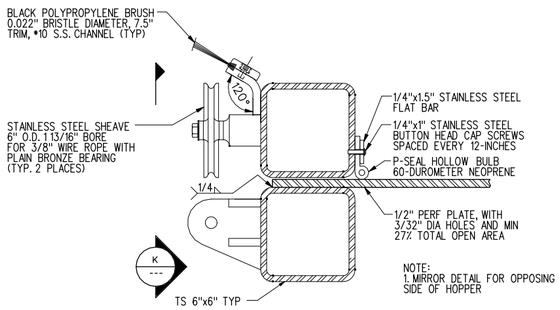

HOPPER DETAIL F / SF23

3" = 1'-0" 1" 0 3" 6" 9" 12"

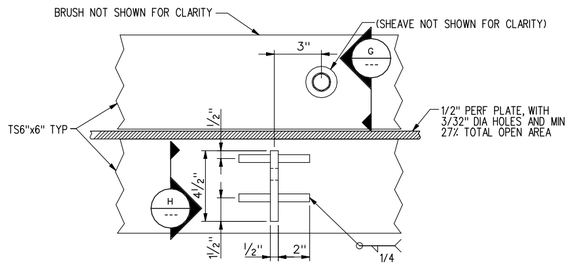

HOPPER ELEVATION K / --

3" = 1'-0" 1" 0 3" 6" 9" 12"

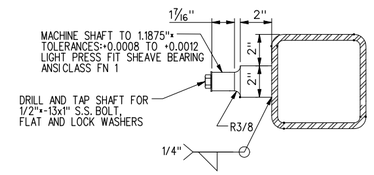

HOPPER SECTION G / --

3" = 1'-0" 1" 0 3" 6" 9" 12"

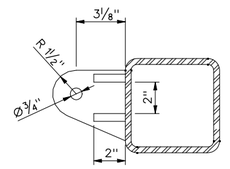

HOPPER SECTION H / --

3" = 1'-0" 1" 0 3" 6" 9" 12"

PRELIMINARY
95% SUBMITTAL

US Army Corps of Engineers
Seattle District

Symbol	Description	Appr.	Date
		/	/

U.S. ARMY ENGINEER DISTRICT, SEATTLE
CORPS OF ENGINEERS
SEATTLE, WASHINGTON

Prepared by: HDR FISHPRO

Designed by: JLH
Drawn by: Autoscan, Inc.
Checked by: ED
Date: 16 JUN 08
File # E-56-14-19
Rev.

ADDITIONAL WATER STORAGE PROJECT
HOWARD HANSON DAM
GREEN RIVER WASHINGTON

LIFT HOPPER DETAILS

Plate number: SF25
Sheet of

DATE AND TIME PLOTTED: 8/6/2008 3:08:34 PM DESIGN FILE: I:\AECDESIGNS\HHAW\OTHER\HDRINC\20080611\VHHSM-SF25.DGN

Howard A. Hanson Dam
Additional Water Storage Project

Section 902 Post Authorization Change Validation Study – Fish Passage

King County, Washington

APPENDIX B-12

2008 95% Geotechnical Baseline Report

Final Integrated Validation Report and

Supplemental Environmental Impact Statement

US Army Corps of Engineers
Seattle District

TACOMA POWER | TACOMA WATER | TACOMA RAIL
TACOMA PUBLIC UTILITIES

APPENDIX B. GEOTECHNICAL BASELINE REPORT AND ADDENDUM

[CONTRACT TITLE]

HOWARD HANSON DAM

FISH PASSAGE FACILITY, ADDITIONAL WATER STORAGE PROJECT

GEOTECHNICAL BASELINE REPORT

3/18/2006

TABLE OF CONTENTS

Part - 1 GENERAL 1
1.1 General Information 1
1.2 Description of Work 1
1.3 Intended Methods 1
1.4 References 2
1.5 Definitions 3
1.6 Sources of Information 3
1.7 Design Team 5
1.8 Geotechnical Explorations 5
Part - 2 GENERAL SITE CONDITIONS 6
2.1 Location and Access 6
2.2 Geologic Background 6
2.3 Surface and Subsurface Materials 7
2.3.1 Bedrock Materials 7
2.3.2 Rock Mass Classification and Slope Stability 8
2.3.3 Bedrock Excavation 11
2.3.4 Unconsolidated Materials 13
2.4 Hydrogeologic Conditions 13
Part - 3 GEOTECHNICAL BASELINE AND CONSTRUCTION CONSIDERATIONS 15
3.1 Rock Mass Reinforcement 15
3.2 Existing Rock Mass Reinforcement 16
3.3 Dewatering 16
3.4 Grouting 17
3.5 Rock Excavation 17
3.5.1 Blasting 17
3.5.2 Mechanical Excavation 17

Table 1 Adopted Rock Properties (Andesite) 20
Table 2. Adopted Rock Properties (Pyroclastite) 20
Table 3. Adopted Rock Properties (Basaltic Andesite) 20

Table 4. Approximate Preferred Orientations of Discontinuities 21
Table 5. RQD Values 21
Table 6. Rock Mass Rating Values 21
Table 7. Q-System Values 22
Table 8. Potential Slope Stability Failures Based on Kinematic Analyses 23
Table 9. Adopted Unconsolidated Materials Properties 24
Table 10. Summary – Geotechnical Baseline Properties 24

Figure 1. Regional Geologic Map. 26
Figure 2. Top of Bedrock Contour Map [To be developed] 27
Figure 3. Average Orientations of Discontinuity Clusters Measured in BHTV Surveys. 28
Figure 4. Peak Particle Velocity vs. Scaled Distance Measured for Excavation Blasting 29

Appendix A. ……A-1
Appendix B. ……B-1

Part - 1 GENERAL

1.1 General Information

This report is part of the contract documents for the Howard Hanson Dam [NAME OF CONTRACT] Contract – Fish Passage Facility, Additional Water Storage Project.

This Geotechnical Baseline Report (GBR) presents the Government's interpretation of the anticipated subsurface conditions to be encountered during the execution of this contract and to record the basis of the design developed in the Drawings and Specifications. This report, and documents and drawings incorporated by reference, shall be considered to be the sole source of the Government's interpretation of the geotechnical conditions for this contract. This report also establishes the geotechnical baseline that serves as a basis for the identification of differing site conditions. The sources of the geotechnical data on which this report is based are referenced in Paragraph 1.6.

In developing the geotechnical criteria used in the design and preparation of the Contract Documents, certain assumptions have been made concerning the contractor's construction methods and performance capabilities. The actual procedures, techniques and craftsmanship employed by the Contractor may result in ground behavior different from that postulated herein.

This report is prepared in three parts: Part 1 provides background information regarding this document, Part 2 gives general background information regarding the project site conditions, and Part 3 establishes the geotechnical baseline and some construction considerations.

1.2 Description of Work

Geotechnical work to be performed under this contract is outlined in the contract Drawings and Specifications. Some, but not all, of the work to be performed includes: rock excavation; overburden excavation; foundation preparation; foundation grouting; operation of a dewatering system; installation, operation, maintenance and monitoring of geotechnical instruments; construction of retaining walls/berms; tunneling; and rock mass stabilization.

1.3 Intended Methods

The contractor shall determine the means and methods for accomplishing the work under this contract. Activities conducted under this contract shall be carried out in accordance with the procedures and practices outlined in the contract. Required specifications for materials and equipment are also included in the contract Drawings and Specifications.

1.4 References

The following references were used in the preparation of this document or in the evaluation of the data presented in this document (to include Appendix A):

- American Society for Testing and Materials, 1995, Standard Test Method for Unconfined Compressive Strength of Intact Rock Core Specimens (D2938-95)
- American Society for Testing and Materials, 1998, Standard Test Method for Laboratory Determination of Water (Moisture) Content of Soil and Rock by Mass (D2216-98)
- Barton, N.R., Lien, R., and Lunde, Jr., 1974, Engineering classification of rock masses for the design of tunnel support. *Rock Mechanics* **6**(4), 189-239.
- Bates, R.L. and J.A. Jackson, 1984, Dictionary of Geological Terms, Third Edition, Doubleday
- Bieniawski, Z.T., 1974, Geomechanics classification of rock masses and its application to Tunneling: Transactions South African Institute Civil Engineering, v. 15, no. 12, p. 335-343.
- Call, R.D., Savely, J.P., and Pakalnis, R., 1982, A simple core orientation technique, Proceedings, Third International Conference on Stability in Surface Mining, Society of Mining Engineers, AIME, Vancouver, Canada, p. 465-481.
- Cooper, H.H., Jr., and C.E. Jacob, 1946, A Generalized Graphical method for Evaluating Formation Constants and Summarizing Well-Field History: Transactions, American Geophysical Union, v. 27, p. 526-534.
- Frizzell, V.A., 1984, Preliminary Geologic Map of the Snoqualmie Pass 1:100,000 Quadrangle, Washington U.S.Geological Survey (USGS) Open File Map 84-693.
- Hammond, P.E., 1963, Structure and stratigraphy of the Keechelus volcanic group and associated Tertiary rocks in the West-Central Cascade Range, Washington, Ph.D. dissertation, University of Washington, 264 p.
- Hoek, E. and Bray, J., 1981, Rock Slope Engineering, Third Edition, Chapman & Hall, Inc.
- International Society of Rock Mechanics, 1981, Suggested Method for Laboratory Determination of direct Shear Strength
- Neuman, S.P., 1975, Analysis of pumping test data from anisotropic unconfined aquifers concerning delayed gravity response: Water Resources research, v. 11, No. 2, p. 329-342.
- Tabore, R. W., et. al. 2000. Geologic map of the Snoqualmie Pass 30x60 minute quadrangle, Washington. U.S. Geological Survey.
- U. S. Army Corps of Engineers, 1983, Earthquake Analysis of Howard Hanson Dam, Design Memorandum No. 26: Seattle District, Seattle, Washington.
- U.S. Army Corps of Engineers, 1994, Rock Foundations (EM 1110-1-2908)
- U. S. Army Corps of Engineers, 1998, Additional Water Supply Project, Final Feasibility Study Report and Final Environmental Impact Statement (EIS), Howard Hanson Dam, Green River, Washington: Seattle District, Seattle, Washington.

- U.S. Department of the Interior, Bureau of Reclamation, 1985, Ground Water Manual, Third Edition, A Water Resources Technical Publication

1.5 Definitions

Definitions of geologic terms are primarily taken from the Dictionary of Geological Terms, edited by Bates and Jackson. Other key words are defined here to insure their meaning is clear.

- *Aphanitic*. Textural term applied to any fine-grained igneous rock whose constituents are too small to be distinguished by the unaided eye.
- *Ash*. Pyroclastic material under 2 mm in diameter.
- *Autobreccia*. Syn-depositional texture developed through the non-uniform cooling of a volcanic flow. The outer margins of the flow cool more rapidly and are subsequently incorporated into the remainder of the flow as solid fragments from 2 mm to greater than 64 mm.
- *Blocks/Bombs*. Pyroclastic material greater than 64 mm in diameter.
- *Glaciolacustrine*. General classification of sediments derived from or deposited in glacial lakes.
- *Hypabyssal*. General adjective applied to minor intrusions such as sills and dikes which have crystallized under conditions intermediate between plutonic and extrusive.
- *Lapilli*. Pyroclastic material between 2 mm and 64 mm.
- *Lapilli Tuff*. Pyroclastic rock composed of roughly equal parts of lapilli and ash.
- *Moraine*. Unstratified sediments deposited directly by the actions of glacial ice. Sediments typically include a mixture of clay, silt, sand, gravel, and boulders.
- *Porphyritic*. Textural term applied to an igneous rock which contains some constituents which are visible to the naked eye. The remainder of the constituents are aphanitic.
- *Pyroclastic Rock*. Any primary rock composed of solid materially explosively or aerially ejected from a volcanic vent.
- *Scaled Distance*. The distance in feet from the center of a blast hole to another location (e.g., structure ore instrument) divided by the square root of the weight of explosives detonated within an 8 millisecond delay.
- *Tuff*. Pyroclastic rock predominately composed of volcanic ash.
- *Tuff Breccia*. Pyroclastic rock composed of roughly equal parts blocks/bombs and lapilli or ash.

1.6 Sources of Information

Geotechnical data used in the preparation of this report are presented in the Appendices and are summarized in part from the following documents:

NORCAL Geophysical Consultants, 2000, Borehole Geophysical Logging Survey, Cofferdam and Fish Collection Facility, Howard Hanson Dam, King County, Green River, Washington. Contract No. DACW67-99-M-0436.

NORCAL Geophysical Consultants, 2001, Borehole Geophysical Logging Survey – Boreholes 01-DD-222 through 01-DD-230, Cofferdam and Fish Collection Facility, Howard Hanson Dam, King county, Green River, Washington. Contract No. DACW67-99-M-0436.

NORCAL Geophysical Consultants, 2003, Borehole Geophysical Logging Survey – Borings 03-DD-231 through 03-DD-238, Cofferdam and Fish Collection Facility, Howard Hanson Dam, King county, Green River, Washington. Contract No. DACW67-03-P-2125.

Shannon & Wilson, Inc., 2002, Final Report: Instrumentation Installation Summary, Outlet Tunnel. Howard Hanson Dam, Eagle Gorge, Washington. Contract No. DACA67-02-0201, Task Order No. 1. November 2002.

Shannon & Wilson, Inc., 2004a, 100% (Final) Geotechnical Report Excavation and Tunnel Rock Support Analyses and Recommendations. Howard Hanson Dam Fish Bypass Facility, Eagle Gorge, Washington. Contract No. DACW67-00-D-2002, Task Order Nos. 8, 9, and 11. February 2004.

Shannon & Wilson, Inc., 2004b, Geotechnical Report Excavation and Tunnel Rock Laboratory Testing of Rock and Analysis of Fish Passage Facility Excavation, Rock Pillar, and Outlet Tunnel Stability. Howard Hanson Dam Fish Bypass Facility, Eagle Gorge, Washington. Contract No. DACW67-00-D-2002, Task Order 7. March 2004.

Shannon & Wilson, Inc., 2004c, Additional Geotechnical Borehole Data Collection and Analyses. Howard Hanson Dam Fish Bypass Facility, Eagle Gorge, Washington. Contract No. DACW67-02-D-0201, Task Order 2. April 2004.

Shannon & Wilson, Inc., 2005a, Existing Structures Instrumentations Systems Performance and Data Evaluation Interim Report. Howard Hanson Dam Fish Bypass Facility, Eagle Gorge, Washington. Contract No. DACW67-02-D-0201, Task Order 4. February 2005.

Shannon & Wilson, Inc., 2005b, Results of Geophysical Determination of Steel Set Locations in the Outlet Tunnel Liner. Howard Hanson Dam Fish Bypass Facility, Eagle Gorge, Washington. Contract No. W912DW-05-D-1021, Task Order 3. September 2005.

U.S. Army Corps of Engineers, 1963, Howard A. Hanson Dam Foundation Report, Rock Fill Dam, Spillway and Outlet Works, Green River, Washington: Seattle District, Seattle, Washington

U.S. Army Corps of Engineers, 2004a, Post-Test Blast Report 1150 Bench Blasting for Cofferdam/Excavation, Juvenile Fish Passage Facility, Howard Hanson Dam, Washington.

U.S. Army Corps of Engineers, 2004b, Guide Wall Exploratory Drilling, Juvenile Fish Passage Facility, Howard Hanson Dam, Washington.

U.S. Army Corps of Engineers, 2006a, Post-Area 1B Excavation Blasting Report for Cofferdam/Excavation, Juvenile Fish Passage Facility, Howard Hanson Dam, Washington. [Document in preparation.]

U.S. Army Corps of Engineers, 2006b, Post-Area 1C Excavation to Elevation 1074 Blasting Report for Cofferdam/Excavation, Juvenile Fish Passage Facility, Howard Hanson Dam, Washington. [Document to be completed after work is accomplished.]

U.S. Army Corps of Engineers, 2006c, Fish Passage Facility Cofferdam/Excavation contract foundation mapping report, Juvenile Fish Passage Facility, Howard Hanson Dam, Washington. [Document to be completed after work is accomplished.]

1.7 Design Team

The Seattle District U.S. Army Corps of Engineers, in conjunction with Shannon & Wilson, Inc. and Inca Engineers Inc., performed the design work for this contract.

1.8 Geotechnical Explorations

Between 1994 and 2004, U.S. Army Corps of Engineers personnel conducted a series of exploration programs in support of the Howard Hanson Dam – Fish Passage Facility project. These programs included field and laboratory based investigations. Field investigations included geologic mapping of surface outcrops, drilling and logging of approximately 60 borings, borehole packer and groundwater pumping tests, topographic and sediment bathymetry of the left abutment, excavation of four shallow test pits, and borehole geophysics. Acoustic televiewer, optical televiewer, caliper, temperature-fluid conductivity, heat-pulse flow meter, sonic profile surveys, and ground penetrating radar were the geophysical methods typically employed.

Laboratory investigations included petrographic analyses of thin sections and laboratory tests on select rock core samples. Laboratory tests included unconfined compressive strength, splitting tensile strength, and direct shear tests.

Borehole locations are shown in **Figure 5** and boring logs are presented in Appendix B.

Part - 2 GENERAL SITE CONDITIONS

2.1 Location and Access

Howard Hanson Dam (HHD) is located on the Green River, within the Green River Watershed, approximately 35 miles southeast of Seattle, Washington. Access to the Green River Watershed, and therefore the project site, is restricted. Information on arranging access to the project site can be found in the contract Specifications. Directions to the site are included on the cover of the contract Drawings.

2.2 Geologic Background

The dam spans a narrow rock canyon located 5 miles inside the western Cascade margin. To the east, the Cascade Range rises sharply to elevations over 7,000 feet. The Cascades in this part of Washington are largely composed of a complex assemblage of lava flows, pyroclastic deposits, and fluvial sedimentary deposits. Intrusive igneous rocks are present, but to a lesser extent than those mentioned above. The igneous bedrock in the vicinity of the dam was deposited during the Oligocene (approximately 24 to 36 million years ago) primarily sub-aerially and was later uplifted during the Pliocene (5 million years ago) to form the Cascade Range. This uplift was accompanied by Pliocene and Pleistocene (1 million years ago) volcanism that formed the major Cascade volcanoes such as Mt. Rainier.

The ancestral Green River was tributary to the Cedar River drainage prior to the glaciation of the Puget Sound Lowland. Before the last glacial event the river flowed out of the North Fork Valley to the Cedar. During the Pleistocene, glacial ice extended eastward up into the alpine valley headwaters. The ice and associated glacial deposits (moraine and glaciolacustrine) diverted the proto-Green River from its North Fork Valley. The diverted river flowed on a bedrock floor at elevation 1,000 feet in the river gorge. This gorge is presently buried north of the dam site. The nearest (southwest) rim of the ancestral valley is located several hundred feet northeast of the right abutment of HHD.

During subsequent interglacial periods, the Green River cut its channel approximately 150 feet deeper resulting in over steepened side slopes and collapse of the eastern valley side. Several episodes of deposition, erosion, and landsliding may have followed. The present gorge beneath the dam was cut as a result of river blockage by the last massive slide off the northeast valley wall. Today this landslide is a major landform forming part of the right abutment of HHD.

The present North Cascade Range was uplifted during the Pliocene by a series of complex folds and faults. One such fault is the west-northwest trending Green River fault (also mapped as the Lemolo fault) located approximately 1,500 feet north of the dam (**Figure 1**). Active during the Miocene and/or Pliocene, the fault shows about 4,000 feet of right-lateral, oblique slip displacement. The width of the fault zone is unknown, although between the area of the dam site and the mountain front, the Green River preferentially follows the weak/fractured zone of this fault trace. Several structural folds are present along the south side of the Green River

fault. A landslide at the right (north) abutment obscures the fault trace at the dam. The fault zone probably contributed to the landslide based on the proximity of hydrothermally altered, weaker rock comprising the fault zone. In this area of the Washington Cascades, most major faults strike northwest and dip southwest. Although the strike of the Green River fault west of the dam site reflects this trend, east of the dam site the Green River fault exhibits an east-west trend.

The project site is underlain by bedrock composed of a series of Tertiary age volcanic rocks. Locally, these rocks are known as the Ohanapecosh Formation. Geologic maps of the area suggest the dam site lies within the western extent of a structural nose of an east-west trending, eastward plunging syncline. The axis of the syncline generally trends parallel to the Green River fault. Regional dip of the bedrock is roughly 45 to 50 degrees to the east.

2.3 Surface and Subsurface Materials

Both bedrock and unconsolidated materials are located on-site. Results from the geotechnical explorations identified in Section 1.8 were used to characterize the properties of these materials. The characteristics of these materials are outlined in the following section.

2.3.1 Bedrock Materials

Bedrock within the project area is entirely igneous in origin and includes volcanic flows, shallow intrusions, and pyroclastic deposits. A top-of-rock contour map is included as **Figure 2** for excavation estimation purposes. For the purposes of this project, three informal units have been differentiated: andesite, pyroclastite, and basaltic andesite. A description of each unit and the adopted rock properties are discussed below. Rock mass characterization is discussed in section 2.3.2.

1) Andesite. The Andesite unit accounts for approximately 70 percent of the bedrock volume and is comprised of aphanitic and porphyritic flows and hypabyssal intrusions of intermediate composition. The unit is largely unweathered, of moderate strength, moderately hard to hard, dense, and light to dark gray to dark green. Autobreccia textures are commonly (greater than 50% by volume) displayed within the unit. Discontinuities within the unit include both primary and secondary features. Primary discontinuities are limited to occasional flow banding which does not affect unit stability. Secondary discontinuities are limited to the moderately abundant to abundant fractures. Fracture characteristics are discussed in the closing paragraph of this section. The adopted rock properties for the Andesite are provided in Table 1.

2) Pyroclastite. The bedrock component attributable to the Pyroclastite unit is roughly 20 percent of the volume. The unit is comprised of basaltic andesite to andesite pyroclastic deposits (tuffs, lapilli tuffs, and tuff breccias). Deposits are light gray to dark gray to buff, soft to moderately hard, and of low to moderate strength. Weathering has strongly impacted surface outcrops but has had little impact on subsurface rocks. The pervasive alteration present within the unit can be inferred as the reason for the unit's rapid deterioration upon exposure to the atmosphere. Discontinuities within the unit include primary depositional features and secondary structures. Primary features do

not affect the unit's stability. Secondary fractures within the Pyroclastite unit share the same characteristics as the other units but are more difficult to discern due to the nature of the unit. Fracture characteristics are discussed in the closing paragraph of this section. The adopted rock properties of the Pyroclastite are provided in Table 2.

3) Basaltic Andesite. The Basaltic Andesite unit, the youngest bedrock unit in the project area, makes up approximately 10 percent of the bedrock volume. Occurrences of the unit are in the form of dikes, sills, and thin flows. Rocks within the unit are dark gray to black, of moderate to high strength, moderately hard to hard, dense, and blocky. Weathering is minimal and alteration is minimal to moderate. Discontinuities are limited to the abundant secondary fractures. Fracture characteristics are discussed in the closing paragraph of this section. The adopted rock properties of the Basaltic Andesite are provided in Table 3.

Secondary structures within all three bedrock units share common characteristics. Fracture spacing ranges from tenths of inches to several feet. Fracture aperture ranges from less than 0.1 mm to greater than 5.0 mm with some fractures healed or partially healed with calcite. Chlorite, calcite, and pyrite are the three most common fracture coatings. Slickenside fractures have been identified in all three units but are most common within the Basaltic Andesite unit.

2.3.2 Rock Mass Classification and Slope Stability

The following section addresses the anticipated excavation rock slope stability and the parameters used in anticipating slope stability.

2.3.2.1 Discontinuities – Orientation and Condition

Throughout the course of the exploration programs identified in section 1.8, data has been collected regarding the frequency, orientation, and condition of discontinuities in the rock mass.

Orientations of discontinuities were measured in core borings using geophysical logging techniques (optical and acoustic borehole televiewers) and along surface outcrops and drill core using conventional mapping and logging techniques. To assess the uniformity of joint orientations, approximately 1,200 discontinuities were analyzed using stereonets following the recommendations by Call, et al. Although a broad spectrum of discontinuity orientations were observed, only statistically significant clusters of data points were selected as preferred joint orientations. The selected preferred joint orientations are listed here and the mean pole orientations are shown in **Figure 3**. The approximate orientations of these discontinuity sets are listed in Table 4.

2.3.2.2 Rock Mass Ratings

Three rock mass classification methods were used to determine the overall quality of the rock mass for engineering purposes. The methods used were the Rock Quality Designation (RQD), Rock Mass Rating (RMR), and Tunnel Quality Index (Q-system) methods. Each of these methods is discussed in the following sections.

1) RQD. The RQD method is expressed as a ratio of the sum of intact core pieces greater than four inches in length to the total length of the core run. This is a quick and easy way to quantify the frequency and intensity of discontinuities within a rock mass and is used as a parameter in the other classification methods discussed here. Bedrock within the project area has an average RQD of 81.3%. Average RQD by unit is as follows: Andesite – 85.4%, Pyroclastite – 90.1%, Basaltic Andesite – 67.8%. A qualitative rating of rock quality by RQD percentage is listed in Table 5.

2) RMR. The RMR system was proposed by Bieniawski (1973) and initially used for tunneling conditions. The RMR system considers six parameters:

- Uniaxial compressive strength of the intact rock
- RQD
- Spacing of discontinuities
- Condition of discontinuities
- Ground water conditions
- Orientation of discontinuities

The above parameters are dependent on the rock mass condition and quality. The last two parameters, however, are also dependent on the location and orientation of the proposed structure with respect to depth of the groundwater table and the orientation of the discontinuities. For this report, 'completely dry' groundwater conditions and 'very favorable' joint orientations have been assumed. There are five rock mass classes, ranging from class I for 'very good rock' (RMR of 81 to 100) to class V for 'very poor rock' (RMR less than 20). The average RMR for bedrock at the project site is 67.2. By unit, the average RMR are 68.9 for the Andesite, 65.7 for the Pyroclastite, and 62.5 for the Basaltic Andesite. For all units, the minimum RMR is 37.0 and the maximum RMR is 87.0. A qualitative rating of rock quality by RMR is listed in Table 6.

3) Q-System. The Q-system was proposed by Barton, Lien, and Lunde (1974) and was developed specifically for tunnel support systems, but has been expanded for other rock excavation applications. The Q-system uses the following equation:

$Q = (RQD/J_n) * (J_r/J_a) * (J_w/SRF)$

where

- RQD - Rock Quality Designation
- J_n - Joint set number dependent on the number of discontinuity sets
- J_r - Joint roughness number dependent on roughness of the most unfavorable discontinuity
- J_a - Joint alteration number dependent on the degree of alteration or filling along the weakest discontinuity
- J_w - Joint water reduction number dependent on water flow
- SRF - Stress reduction factor.

Within the Q-system, rock mass quality is divided into nine classes ranging from "exceptionally poor" to "exceptionally good". A modified Q system was used for this project. The modified Q does not consider J_w or SRF (i.e., these factors are set to 1 in the equation above), as these two factors can vary significantly depending on the type, size and location of the structure. Q values for bedrock within the project area had a geometric mean of 12.1 with a data range between 0 and 666.7. Geometric mean Q values for the Andesite, Pyroclastite, and Basaltic Andesite units respectively are 11.8, 21.4, and 3.8. A qualitative rating of rock quality by Q value is listed in Table 7.

The three rock mass classifications were conducted for each core run for all exploratory borings. Rock mass ratings were developed from boring log, core photograph, and geophysical data. These ratings, and associated rock classes and descriptions, are presented in Appendix A.

2.3.2.3 Excavation Slope Stability (Rock Block Stability)

During construction of the excavation, discrete rock blocks with dimensions that are much less than the height of the slope will daylight in the slope. The stability of these blocks and the necessity for the installation of rock reinforcement were evaluated by performing both kinematic and limiting equilibrium analyses. Kinematic analyses were performed to evaluate whether the potential rock blocks will fall out of the slope due only to geometry and the limiting equilibrium analyses were conducted to evaluate the stability of the rock blocks and estimate rock reinforcement requirements. Modes of potential rock slope instability, results of the kinematic analyses, and results of the limiting equilibrium analyses are discussed here.

1) Modes of Rock Slope Instability. The typical modes of rock slope instability are described below.

a) *Circular Failures*. Circular failures occur in highly weathered, altered, or fractured rock masses. In this failure mode, the rock mass behaves as a soil and shear planes do not follow a single discrete structure or combination of discrete structures.

b) *Plane Shear Failures*. Plane shear failures consist of a block of rock sliding on a single discontinuity, such as a joint, bedding plane, geologic contact, or fault dipping into the excavation. The stability of the slope is dependent upon the following: (i) the orientation of the discontinuity with respect to that of the excavation, (ii) the shear strength of the discontinuity, (iii) the weight of the block, and (iv) the pressure due to water on the base of the block or in joints that could form tension cracks behind the rock face.

c) *Simple Wedge Failures*. A simple wedge failure consists of a block of rock sliding on two discontinuities that intersect such that the intersection of the discontinuities plunges into the excavation. The stability of the slope is dependent upon the same factors that determine stability for the plane shear type failure.

d) *Toppling Failures*. Blocks of rocks that are formed by vertical or high angle discontinuities, such as joints that dip into the slope form toppling failures. Toppling can also occur where overhangs are created by poor blasting practice or the disintegration of weak, non-durable rock at the toe of the slope.

Possible modes of failure at the project site are plane shear, simple wedge and toppling. Circular failure within the rock excavation is unlikely.

2) Kinematic Analyses. The results of the kinematic analyses are listed in the table below and indicate the following:

a) For the north slope, the principal failure modes would likely consist of toppling and wedge failure.

b) For the west and south slopes, all modes of failure are possible.

c) For the intake channel slopes, the most likely failures would be plane shear and wedge failures.

d) For the attraction water conduit (AWC) tunnel and personnel access tunnel, the most likely mode of failure is wedge failure.

Potential failure modes for each slope and the two tunnels are summarized in Table 8. These potential modes of failure are based on the preferred joint orientations discussed in section 2.3.2.1 of this document.

3) Limiting Equilibrium Analysis. Based on the predominant joint orientations, a limiting equilibrium analysis was conducted for each of the potential failure mechanisms identified in item number 2 of this section. In general, when the expected water condition in the slope is not known, rock wedges and plane shear failure surfaces with a dry factor of safety equal to approximately 2.0 will remain stable even under the most severe groundwater pressure conditions (Hoek and Bray, 1980). Wedges and plane shear failure surfaces with factors of safety of less than 2.0 are potentially unstable, and rock wedges with factors of safety less than 1.0 for assumed dry conditions would be unstable under even the most favorable groundwater conditions.

Rock blocks in either the wedge or plane shear failure modes with computed factors of safety less than 2.0 are likely to occur in all excavation slopes. In addition, the west slope may contain rock blocks in orientations that have computed factors of safety equal to or less than 1.0. This indicates that for the west slope, rock blocks could be expected to be unstable, even if there were no water pressure in joints that bound the rock blocks.

2.3.3 Bedrock Excavation

Bedrock excavation in the vicinity of the FPF has previously been accomplished using both controlled blasting and mechanical excavation with a hoe ram. A comparison of rates of rock production for blasting versus mechanical excavation is difficult to quantify due to excavation delays caused by other project requirements and changes in rock support techniques from one type of excavation activity to the other. During blasting, an average of approximately [This value will be developed at a future date] yards^3 of rock were excavated per day and approximately [This value will be developed at a future date] yards^3 of rock were excavated per day using mechanical excavation. These daily rates include rock support (i.e., shotcrete/wire mesh, rock bolts and weepholes) and were accomplished working two ten-hour shifts per day.

2.3.3.1 Blasting

Blasting has been used to excavate rock along the approach channel to the FPF, within the cofferdam footprint, and within the excavation for the FPF. The effects of each blast were recorded dynamically by the following types of instruments: crack meters, strain gages, sister bar type strain gages, piezometers and geophones. Static readings were recorded before and after each blast with the following types of instruments: crack meters, extensometers, inclinometers, liquid level system, piezometers, sister bar-type strain gages, strain gages, and geophones.

Instruments were located on existing critical structures and on or within the bedrock in the vicinity of the FPF excavation. The Government has installed instrumentation to monitor the effects of construction activities on the existing critical project structures. Instruments have also been installed by a previous contractor to monitor the effects of construction activities on the stability of the rock mass. The locations of all instruments (USACE and contractor installed) are shown on the contract drawings. Instrumentation data can be provided upon request.

Threshold and limiting values for all instruments have been established in the contract specifications. These values have been set to prevent damage to the existing structures and to provide protection of workers from rock fall within the excavation. A summary of the effects of blasting on the existing critical structures instrumentation is given in the three post blasting reports listed in Section 1.6.

Threshold and limiting values have not been exceeded during blasting events for any instruments. Geophones, which measure peak particle velocity (PPV) during a blast, have typically responded closer to their respective threshold values than other instruments. A correlation between the scaled distance of a blast and the peak particle velocity is generally a useful tool predicting the peak particle velocity at a given distance from a blast. This relationship typically takes the following form:

$PPV = K(D_s)^m$

where,

- PPV – peak particle velocity (in/sec)
- K and m are site attenuation constants
- D_s = scaled distance ($ft/lb^{0.5}$)

Figure 4 shows the maximum measured peak particle velocity versus scaled distance from blasts conducted to date. Scaled distances were generally determined using the shortest distance to the instrument through rock/ concrete beginning at the closest blast hole to the instrument. If the shortest distance included a gap through air, the shortest distance through rock/concrete was used instead.

A hand fit correlation through the data was made to insure that most PPV values fall below the correlation line, especially at small scaled distances where the PPV is predicted to be the highest. For this fit, K = 400 and m = -1.9 and PPV is predicted to equal 16 in/sec at a scaled distance of 5.45 $ft/lb^{0.5}$ and exceed 6 in/sec at a scaled distance of 9.13 $ft/lb^{0.5}$.

2.3.4 Unconsolidated Materials

Unconsolidated materials within the project area are limited to the slope above the existing access road and in the area of the contract wastewater recycling setup and include both fill and native materials. The fill consists of randomly placed silty, sandy, gravels (GP-GM). Native materials are moderately dense silty, sandy gravels (GP-GM) and soft to medium stiff clayey silts (ML). Standard penetration test (SPT) blow counts for all unconsolidated materials averaged 7.8 blows per foot. The minimum and maximum SPT blow counts per foot are 6.5 and 10.5, respectively. Adopted properties for the unconsolidated materials are listed in Table 9.

2.4 Hydrogeologic Conditions

Groundwater within the project area primarily originates from the south slope and flows towards the north. The dam reservoir has had little impact on the area groundwater volume or flow direction prior to construction activities. Groundwater is located within the relatively impervious bedrock and flow is therefore largely controlled by discontinuities. Permeability within the rock depends on the spacing, orientation, width, filling, and interconnectivity of these discontinuities. Packer tests were conducted to measure the hydraulic conductivity of discrete zones within boreholes. Long-term pumping tests were conducted to measure bulk hydraulic conductivity of the rock mass.

1) Packer Testing. Upon completion of exploration boreholes, each borehole was hydraulically pressure tested. Each pressure test consisted of two phases. The first phase consisted of a flow test that was immediately followed by a duration test – the second phase. Results of the pressure tests were used in estimating the bedrock hydraulic conductivity. Testing was performed using a double packer assembly separated by 20 feet, a water pressure gauge and a flow meter. The lower-most zone for each boring was tested with a single packer assembly. Calculated values of hydraulic conductivity varied considerably and included a number of horizons with artesian conditions. Hydraulic conductivity calculations followed the procedures outlined on page 259 of the Bureau of Reclamation's Ground Water Manual. The hydraulic conductivity for zones without artesian conditions ranged from 0.001 ft/day to 9.80 ft/day with an average hydraulic conductivity of 0.74 ft/day.

2) Pumping Tests. Two pumping tests, on separate wells, were conducted to determine bulk bedrock hydraulic conductivity. One pumping test was conducted over a 48-hour period and the other over a 72-hour period. Prior to each pumping test, a step test was conducted to determine the optimum pumping rate. Test wells were then pumped for 48/72 hours with a 48/72 hour recovery test. The pumping well and selected available open boreholes were monitored for every segment of the tests. Test results were analyzed using the Neuman (1975) unconfined method and the Cooper-Jacob (1946) method to determine the hydraulic conductivity (ft/day) for the rock mass between the pumped well and observation wells. Based on the methods of Neuman, the average rock mass hydraulic conductivity is 1.87 ft/day. Based on the Cooper-Jacob methods, the average rock mass hydraulic conductivity is 1.80 ft/day.

Average hydraulic conductivity values for both the packer testing and the pumping tests are on the same order of magnitude indicating that at a scale greater than the distance between exploration boreholes and beyond the packer spacing (i.e., greater than 20 feet), the fracture connectivity may approximate a porous medium. However, rock discontinuities are the primary source of rock hydraulic conductivity, and borings drilled through discontinuities will produce flowing water if the surface of the borehole is below the pressure head in the discontinuity.

Artesian conditions have been encountered within the project area during geotechnical explorations. Artesian conditions are encountered over discrete intervals and are typically relieved by further drilling. The majority of the artesian conditions encountered have been between the 1,070 ft. and 1,130 ft. elevations. Discrete zones of moderately pressurized groundwater can be expected during the excavation process.

Part - 3 GEOTECHNICAL BASELINE AND CONSTRUCTION CONSIDERATIONS

This section sets forth the baseline geotechnical conditions that are anticipated to prevail at the FPF construction site. These baseline conditions will form the basis of determining if changed geotechnical conditions are present at the site. Table 10 summarize the physical baseline properties from Part - 2 of this document for the surface and subsurface materials present at the site.

This following sections address baseline conditions and specific construction considerations affected by the geotechnical properties identified in Part - 2 of this document. This includes only a very limited number of considerations and should not be viewed as the extent of potential considerations.

3.1 Rock Mass Reinforcement

Based on the nature of the bedrock in the area of excavation and the presence of existing critical structures, a number of soil and rock mass reinforcement measures are required to support the rock slope excavation as detailed in the contract Drawings and the Sspecifications. The rock support required by the contract Drawings and Specifications is designed to support the rock under the influence of gravity to a factor of safety of 2 and is not intended to support additional loads that may be imposed by contractor activities that are a result of the contractors chosen means and methods for construction.

1) *Scaling*. Rock scaling will be conducted immediately following excavation of a given area. Scaling will remove any loose, hanging, or potentially dangerous rock that may create a dangerous environment. Due to the nearly random orientation of fractures within the rock mass, scaling is a particularly important, and perhaps difficult, step in the rock mass reinforcement. Where encountered, rocks of the Pyroclastite unit degrade very rapidly upon exposure and increase the difficulty in preparing a suitable rock surface, both for engineered slopes and foundation preparation. The addition of shotcrete should be conducted in a timely manner as required in the contract Drawings and Specifications to prevent degradation and the need for rescaling.

2) *Rock Anchors and Rock Dowels*. Tensioned (anchors) and untensioned (dowels) rock bolts will be used during construction to provide rock and/or structural support. Information regarding anchor materials, location, installation methods and tolerances, and stressing is included in the contract Drawings and Sections 02490 and 02491 of the Specifications. Based on the results of the Watertightness Test, rock bolts bore holes may or may not be required to be grouted and re-drilled prior to installing the rock bolt. The government estimates that 40% of the rock bolt borings will require grouting and redrilling prior to the installation of the rock bolts. When the dewatering system is operating as designed, flowing water from rock bolt holes should be minimal. Without the dewatering system running, approximately [This value will be developed at a future date]% of rock bolt holes will likely have flowing water and require additional measures to allow proper placement of grout.

4) *Shotcrete*. Shotcrete will be used as a slope stability measure on soil and rock slopes. The required materials, preparation and placement methods, and curing and testing requirements are outlined in section 03371 of the contract Specifications. With the dewatering system operational as specified in the contract Drawings and specifications, there should be no groundwater from weep holes or rock bolt holes to interfere with shotcrete placement. If the dewatering system is not operational, then ?? gpm/sqft of rock face of water from weep holes and/or rock bolt holes should be anticipated. During the cold season from [month] to [month] there will be an average of [number of days] days per month when air temperatures will be below 40 degrees F for a portion of a day and the contractor will need to provide means (e.g., covers and heaters) to keep shotcrete above the specified minimum curing temperature. During the remainder of the year, and average of [number of days] days per month will have temperatures below the specified curing temperature.

5) *Welded Wire Fabric*. Welded wire fabric will be used as a slope stability measure on any rock slopes excavated under this contract that are temporary and will require further excavation at a later date.

6) *Weep Holes*. Weep holes will be used to mitigate pore water pressures in the excavation slopes. Section 02491 of the contract Specifications provides details on the location, orientation and tolerances required.

3.2 Existing Rock Mass Reinforcement

Rock mass reinforcement measures, primarily rock bolts, are present in areas to be excavated. The vast majority of the rock bolts encountered will be between the 1,070 and 1,140 foot elevations, as represented in figures 6 and 7.

3.3 Dewatering

The dewatering system outlined in the contract Drawings and Specifications was designed to serve a threefold purpose: 1) keep the excavation dry for excavation and construction, 2) reduce the hydrostatic pressure on rock discontinuities intersecting excavation slopes, and 3) reduce uplift pressures under the cofferdam prior to construction of the FPF.

Estimated flows into the excavation have been calculated from the hydraulic conductivity values calculated from the packer and pumping tests. These flows may be anywhere from 80 to 2,800 gallons per minute (gpm). An analysis of data collected from the pumping tests indicates that water is moving from the south towards the north across the FPF site. Contributions of water from the reservoir itself were relatively insignificant during pumping tests. Foundation grouting of the left abutment of the cofferdam, beneath the cofferdam, beneath the existing outlet tower and under the existing outlet tower seismic retrofit was conducted to further reduce the hydraulic connection between the aquifer and the reservoir.

The dewatering system is conservatively designed in that it is designed to stop flows into the excavation assuming a flow rate of 2,800 gpm. Eight deep dewatering wells can each accommodate up to 300 gpm (for a total of 2,400 gpm), and the 10 relief wells

can accommodate an additional 400 gpm. [These statistics will be updated with the actual well performance data once the wells have been installed and tested.]

Groundwater pressure head elevations within the footprint of the FPF excavation typically range from 1145 to 1150 feet under non-pumping conditions, non-inundated pool conditions, and away from the rock face where drain holes influence the rock mass water pressure heads.

3.4 Grouting

Grouting will be conducted to reduce seepage to the personnel access tunnel excavation and provide additional strength to the rock mass between the existing outlet tunnel and the FPF excavation. Details regarding the grouting materials and methods can be found in the contract Drawings and Specifications, section 02251a.

Based on original dam construction grouting activities and previous FPF construction grouting, average rock grout takes for the construction foundation and left abutment were 0.1 and 0.2 sacks of Portland cement (94 lbs.) per linear foot, respectively. Grout takes are based on an assumed borehole outside diameter of four inches. Cement to water content within the original grout varied from 4:1 to 1:1 depending on the results of borehole water pressure tests and grout take during grouting. Rock grout takes encountered during the execution of this contract are expected to be consistent with the above grout takes except in the rock pillar between the proposed excavation and the existing outlet tunnel where grout takes will be 0.6 sacks of Portland cement (94 lbs.) per linear foot.

3.5 Rock Excavation

Blasting and mechanical excavation are both acceptable options for rock removal (see contract specifications) that have been used effectively at the site. The following sections describe the baseline conditions for these two rock excavation activities.

3.5.1 Blasting

Conditions at the site for blasting are favorable. When blasts are prepared so that the scaled distance to the nearest existing structure per delay is greater than 5.45 ft/lbs^0.5 the PPV will be less than 16 in/sec. When blasts are prepared so that the scaled distance to the radial gate trunnions and/or the spillway structure per delay is greater than 9.13 ft/lbs^0.5 the PPV will be less than 6 in/sec. Overbreak of one to two feet on the final blasted face is common due to randomly oriented and unpredictably located rock discontinuities. An average rate of rock excavation using controlled blasting of [This value will be developed at a future date] ydr^3/day is achievable at the site assuming two 10-hour shifts per day and the coincident installation of rock support with excavation..

3.5.2 Mechanical Excavation

Mechanical excavation has been used successfully at the site. Using [describe equipment specifications], a rate of [This value will be developed at a future date]

yd^3/day can be achieved. This rate of rock excavation includes the installation of rock support and assumes two 10-hour shifts per day.

TABLES

Table 1 Adopted Rock Properties (Andesite)

Property	Range	Average (One Std Deviation)
Specific Gravity (Bulk Dry)	2.50 to 2.60	
Moist Unit Weight (pcf)	136.1 to 205.1	
Unconfined Compressive Strength (psi)	2,230 to 27,130	7,363 (4,260)
Shear Strength at 50 psi Normal (psi/phi)	27/29 to 95/62	
Tensile Strength (psi)	413 to 2,540	1,360 (807)
Poisson's Ratio	0.0019 to 0.4325	0.2661 (0.0873)

pcf – pounds per cubic foot
phi – internal angle of friction
psi – pounds per square inch

Table 2. Adopted Rock Properties (Pyroclastite)

Property	Range	Average (One Std Deviation)
Specific Gravity (Bulk Dry)	2.25 to 2.35	
Moist Unit Weight (pcf)	136.1 to 152.4	
Unconfined Compressive Strength (psi)	1,710 to 4,260	3,190 (1,072)
Shear Strength at 50 psi Normal (psi/phi)	33/23 to 34/16	
Poisson's Ratio	0.25 to 0.50	0.335 (0.101)

pcf – pounds per cubic foot
phi – internal angle of friction
psi – pounds per square inch

Table 3. Adopted Rock Properties (Basaltic Andesite)

Property	Range	Average (One Std Deviation)
Specific Gravity (Bulk Dry)	2.60 to 2.65	
Moist Unit Weight (pcf)	159.2 to 170.4	
Unconfined Compressive Strength (psi)	4,730 to 10,390	8,140 (3,003)
Shear Strength at 50 psi Normal (psi/phi)	31/31	
Tensile Strength (psi)	not available	

pcf – pounds per cubic foot
phi – internal angle of friction
psi – pounds per square inch

Table 4. Approximate Preferred Orientations of Discontinuities

Joint Set Designation	Dip Direction (degrees)	Dip (degrees)
J1	215	90
J2	135	45
J3	75	50
J4	10	25
J5	240	53
J6	295	55
J7	155	20

Table 5. RQD Values

RQD (%)	≤ 25	25 ≤ 50	50 ≤ 75	75 ≤ 90	90 ≤ 100
Rock Quality	Very Poor	Poor	Fair	Good	Excellent

Table 6. Rock Mass Rating Values

Rating	100 - 81	80 - 61	60 - 41	40 - 21	< 20
Class No.	I	II	III	IV	V
Description	Very good rock	Good rock	Fair rock	Poor rock	Very poor rock

Table 7. Q-System Values

Rating	Description
0.001-0.01	Exceptionally Poor
0.01-0.1	Extremely Poor
0.1-1	Very Poor
1-6	Poor
6-10	Fair
10-60	Good
60-100	Very Good
100-600	Extremely Good
600-1000	Exceptionally Good

Table 8. Potential Slope Stability Failures Based on Kinematic Analyses

Slope Face	Slope Orientation		Permissible Failure Mechanisms	Joint Sets	Factor of Safety (dry conditions)
	Dip Direction (degrees)	Slope Angle (degrees)			
North	203	85	Toppling Wedge Wedge	J1 J2 & J5 J7 & J5	-- 1.51 2.41
West	135	85	Toppling Plane Shear Wedge Wedge	J6 J2 J2 & J3 J7 & J3	-- 0.84 0.96 2.37
South	23	85	Toppling Plane Shear Wedge	J1 J4 J6 & J3	-- 1.80 2.83
Intake Channel	0	85	Plane Shear Wedge	J4 J6 & J3	1.80 2.83
AWC Tunnel	NA	NA	Wedge	[data TBI]	[data TBI]
Personnel Access Tunnel	NA	NA	Wedge	[data TBI]	[data TBI]

Table 9. Adopted Unconsolidated Materials Properties

Type	Classification	Unit Weight (dry)	Shear Strength (ϕ, c)[1]
Fill Materials	GP-GM	125 lb/ft3	35°, 0
Native Materials	GP-GM	133 lb/ft3	37°, 0
Native Materials	ML	100 lb/ft3	27°, 100

[1] estimated values based on material classification
ϕ – internal angle of friction (phi)
c – cohesion (in pounds per square foot)

Table 10. Summary – Geotechnical Baseline Properties

Property	Andesite	Pyro-clastite	Basaltic Andesite	GP-GM Fill	GP-GM Native	ML Native
Spec. Gravity (bulk dry)	2.55[1]	2.30[1]	2.63[1]	--	--	--
Weight (dry, pcf)	--	--	--	125.0	133.0	100.0
Weight (moist, pcf)	170.6[1]	145.8[1]	164.8[1]	--	--	--
Unconfined Compr. Strength (psi)	7,363[1]	3,190[1]	8,140[1]	--	--	--
Shear Strength at 50 psi (psi/phi)	52/45[1]	33/20[1,3]	31/31[1]	--	--	--
Shear Strength (phi/c)	--	--	--	35°/0[2]	37°/0[2]	27°/100[2]
Tensile Strength (psi)	1,360[1]	--	--	--	--	--
Poisson's Ratio	0.266[1]	--	--	--	--	--
RQD (%)	85.4[1]	90.1[1]	67.8[1]	n/a	n/a	n/a
RMR	68.9[1]	65.7[1]	62.5[1]	n/a	n/a	n/a
Q	11.8[4]	21.4[4]	3.8[4]	n/a	n/a	n/a
Hydraulic Cond. (ft/day)	<2	<2	<2	--	--	--

[1] Average values – actual values my vary as much as 20 percent
[2] Estimated values based on material classification
[3] Test conducted at 45 psi vs 50 psi
[4] Geometric mean, not arithmetic mean
pcf – pounds per cubic foot
phi – internal angle of friction
psi – pounds per square inch
c – cohesion (in pounds per square foot)

FIGURES

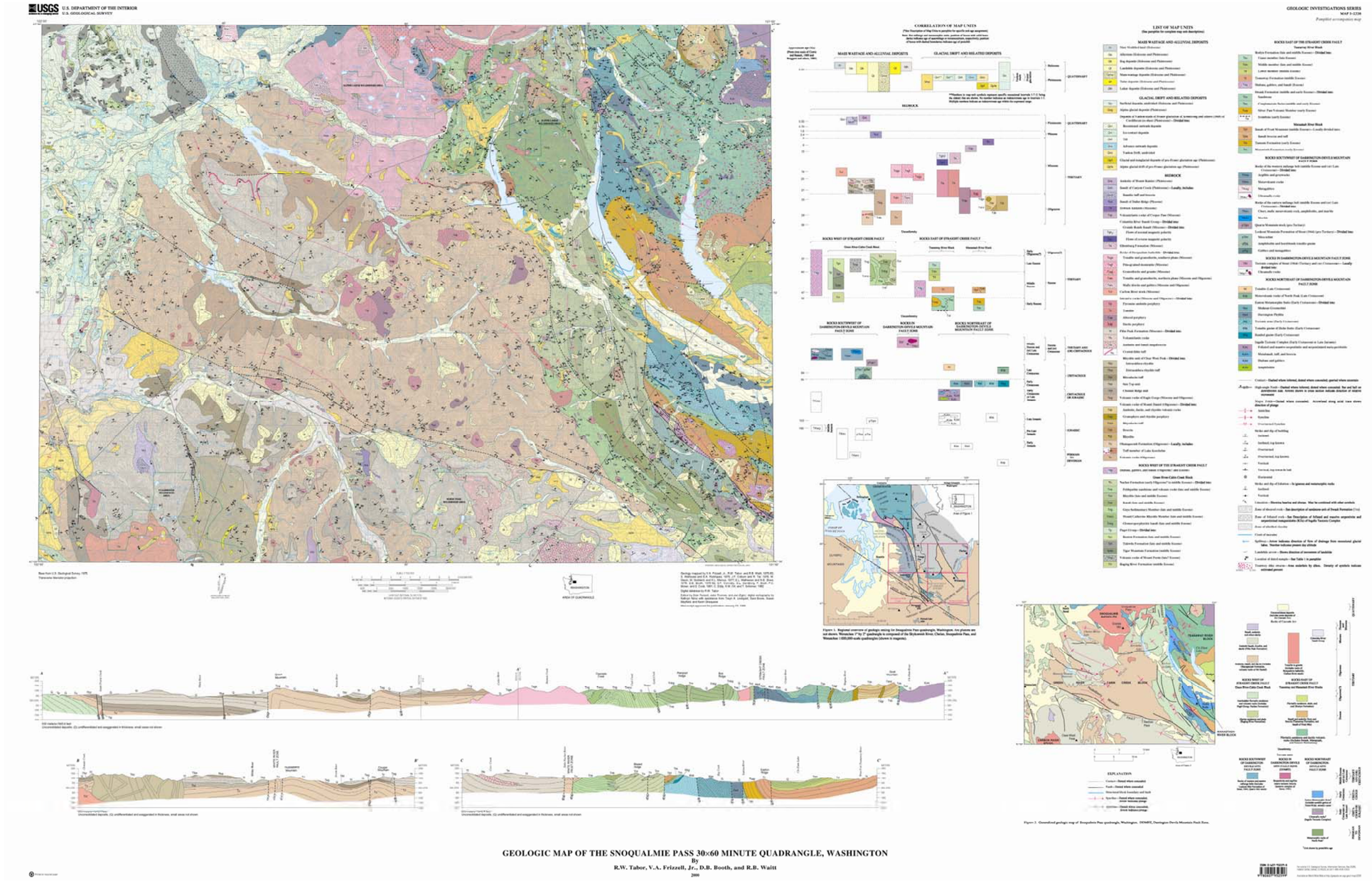

Figure 1. Regional Geologic Map.

Figure 2. Top of Bedrock Contour Map

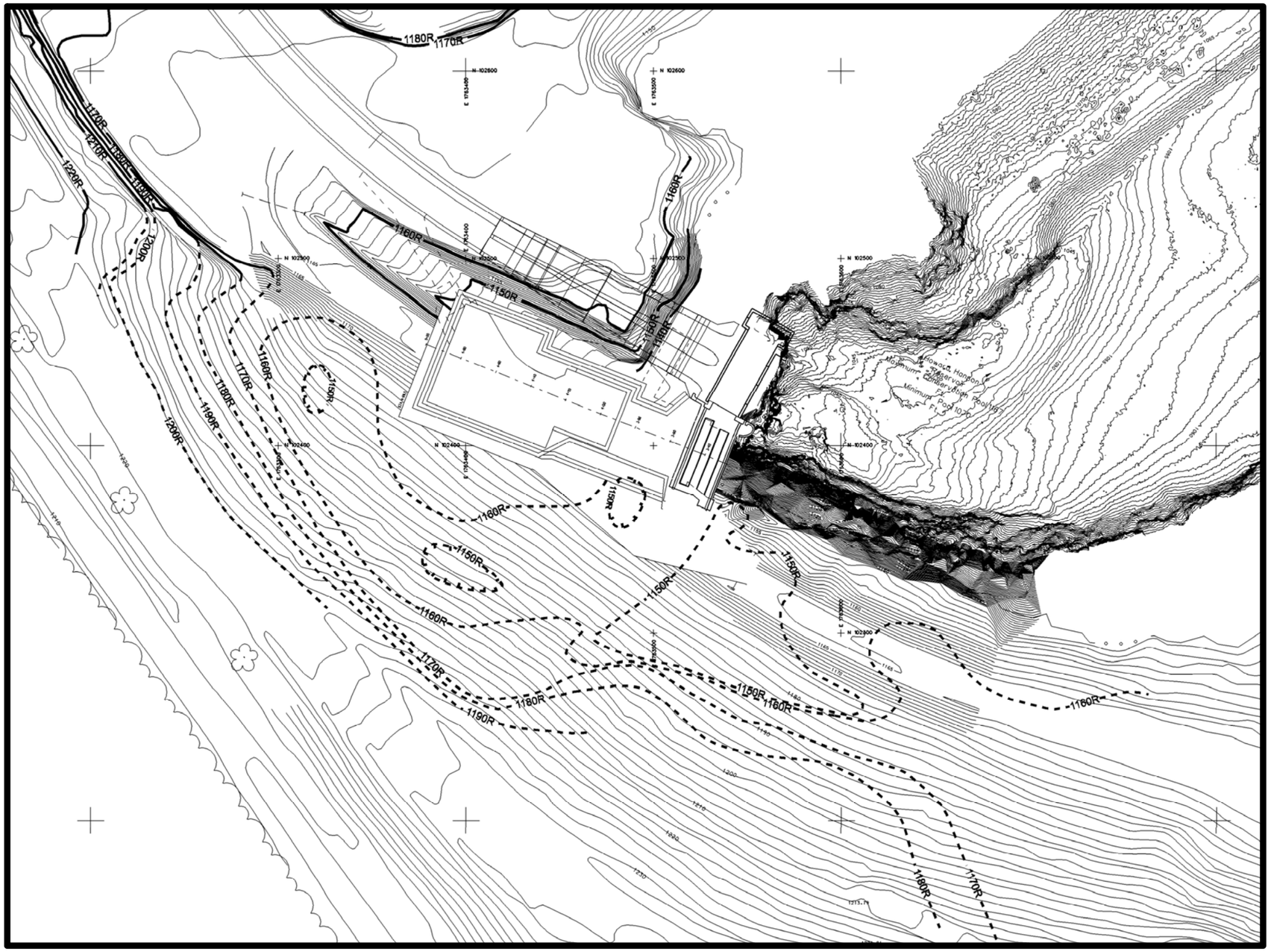

Legend

1220 — Ground Surface Elevation (feet)

~~1160R~~ — Top of Rock Surface Elevation (feet). Dashed where hidden, solid at surface.

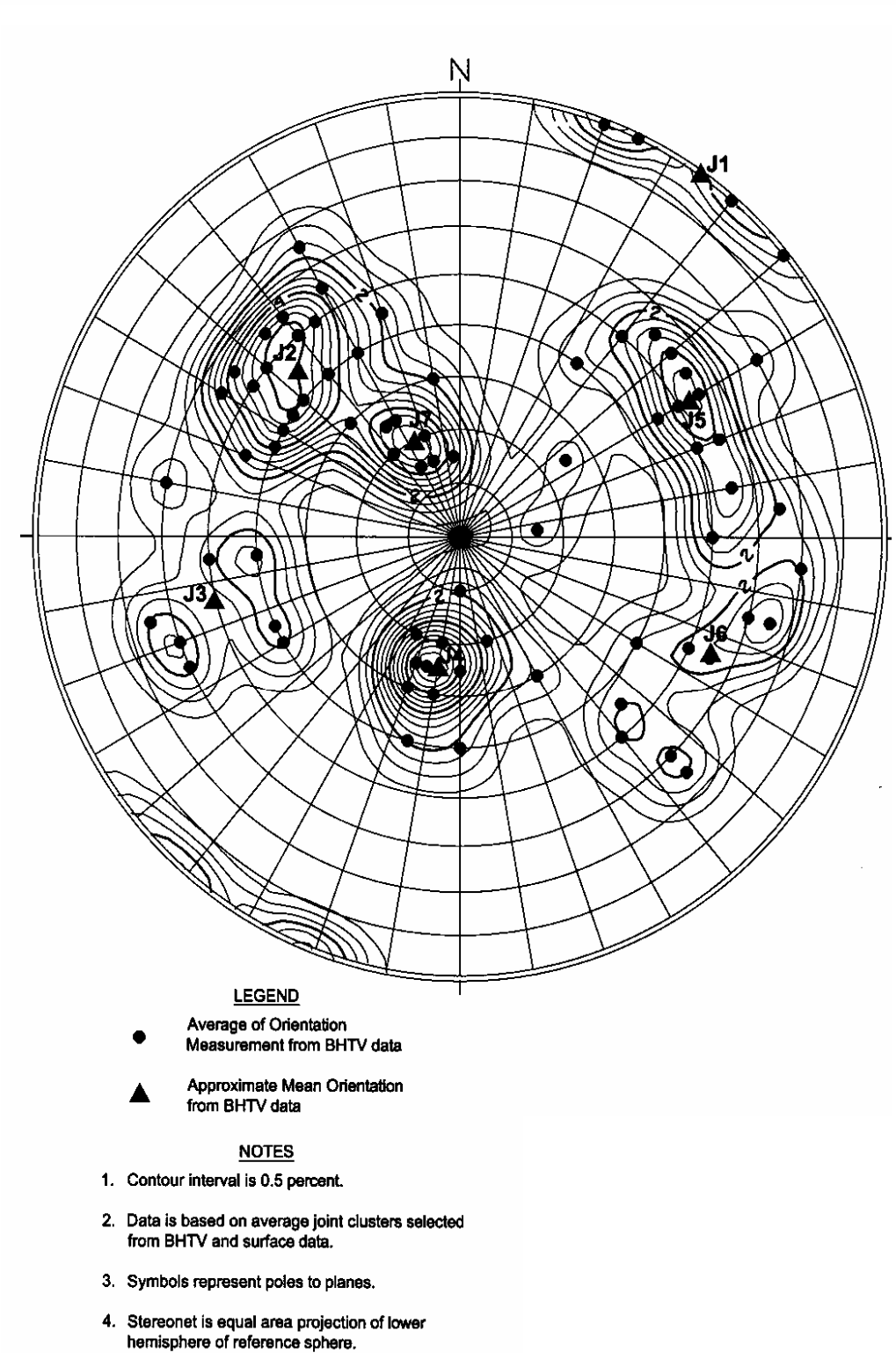

Figure 3. Average Orientations of Discontinuity Clusters Measured in BHTV Surveys.

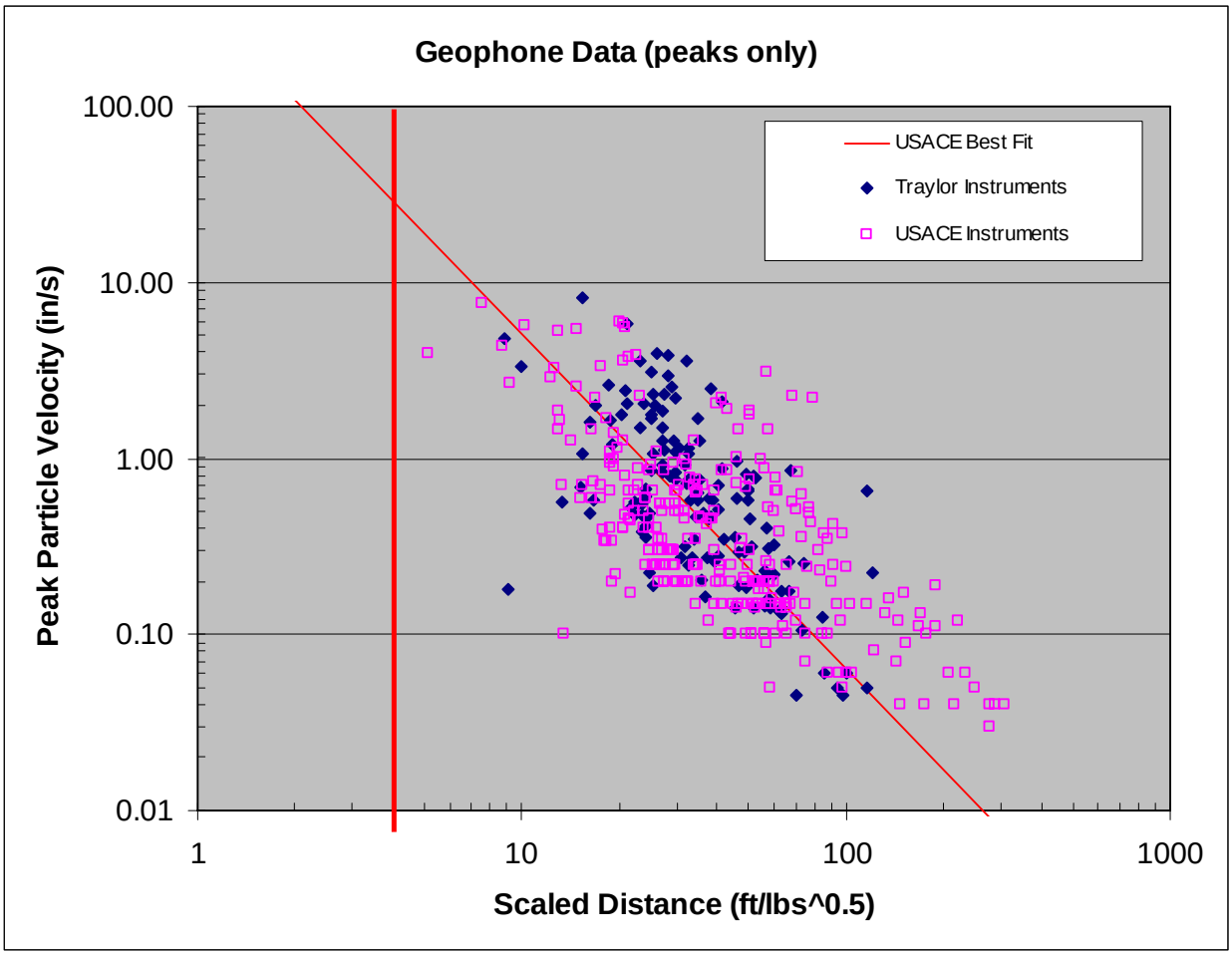

Figure 4. Peak Particle Velocity vs. Scaled Distance Measured for Excavation Blasting

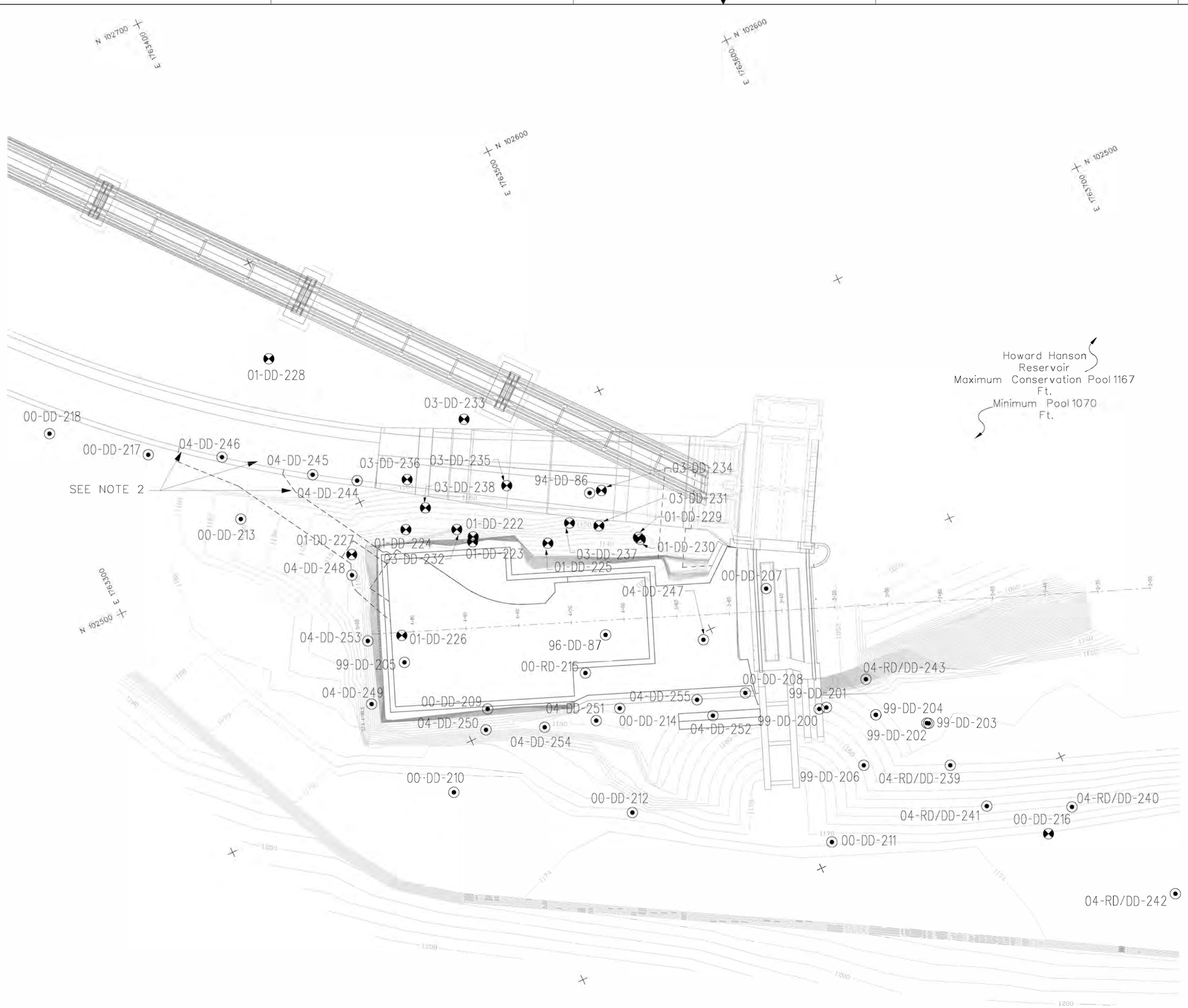

FIGURE 5. BORING LOCATION PLAN

US Army Corps of Engineers
Seattle District

Symbol	Description	Appr.	Date

Designed by: DANIELSON
Drawn by: SWANSON
Checked by: SMITH
Date: 25 JUN 08
File: E-66-5-51
Rev.:

U.S.ARMY ENGINEER DISTRICT, SEATTLE
CORPS OF ENGINEERS
SEATTLE, WASHINGTON
Prepared by:

HOWARD HANSON DAM
AWS PROJECT, FISH PASSAGE FACILITY
FINAL EXCAVATION AND TUNNELING

BOREHOLE LOCATION PLAN

GREEN RIVER WASHINGTON

Plate number:
B-101
Sheet of

DATE AND TIME PLOTTED: 6/30/2008 3:40:01 PM
DESIGN FILE: I:\ACEDesigns\HHW2\Geotechnical\HHW2B-101L.DGN

Appendix A

This appendix contains much of the geotechnical data collected during the explorations mentioned in Section 1.8 of the GBR. The data is presented in the following tables:

Table A1	Unconfined Compressive Strength Test Results
Table A2	Direct Shear Test Results
Table A3	Splitting Tensile Strength Results
Table A4	Compression (P) and Shear (S) Wave Velocities and Poisson's Ratio
Table A5	Joint Condition Data
Table A6	Rock Mass Ratings
Table A7	Packer Test Hydraulic Conductivity Calculations
Table A8	Pumping Test Hydraulic Conductivity Averages

Tables A1 through A3 provide data obtained through laboratory testing of selected rock core samples. Consult the references in section 1.4 of the GBR for information on the laboratory procedures involved.

Table A4 displays full waveform sonic geophysical data collected during borehole geophysical surveys. Measured compressional (P) and shear (S) wave velocities were selected at four foot intervals within each borehole and were used in the calculation of Poisson's Ration (ν) as follows:

$$\nu = (V_p^2-2V_s^2)/2(V_p^2-V_s^2)$$

Where V_p and V_s equal the compressional and shear wave velocities, respectively, in feet per second.

Tables A5 through A8 provide field based observations regarding rock mass competency and project area hydrogeology. This data is discussed in Parts 2 and 3 of the GBR.

TABLE A1 - Unconfined Compressive Strength Test Results

Boring ID	Depth (ft bgs)		Rock Type	Moist Unit Weight (pcf)	Unconfined Compressive Strength (psi)	Young's Modulus (ksi)
	from	to				
94-DD-80	139.3	-	Andesite	150.8	5410	-
94-DD-81	175.2	-	Andesite	162.6	8790	-
94-DD-81	187.5	-	Andesite	165.1	9170	-
94-DD-85	6.5	6.8	Andesite	-	3670*	670
94-DD-85	13.6	13.9	Andesite	-	4630*	2110
94-DD-85	15	15.4	Andesite	-	8740	-
94-DD-85	19	19.4	Andesite	-	27130	-
94-DD-85	24.7	25	Andesite	-	12440	3260
94-DD-85	25	25.3	Andesite	-	12060	3420
94-DD-86	24	24.7	Andesite	-	6830	-
94-DD-86	39.3	40	Andesite	-	7870	-
99-DD-201	49.6	52	Andesite	-	6391	214
99-DD-201	83.5	85.8	Andesite	-	4743	132
99-DD-201	114.2	115.5	Andesite	-	3542	167
99-DD-201	164.3	165.7	Andesite	-	11721	563
99-DD-203	142.2	144	Andesite	-	3021	127
99-DD-203	155.6	157.3	Andesite	-	5829	261
99-DD-203	173.3	174.9	Andesite	-	8838	357
99-DD-204	141.7	143.6	Andesite	-	4369	245
99-DD-204	147.6	148.6	Andesite	-	6104	300
99-DD-204	152	152.9	Andesite	-	8326	435
99-DD-204	158	159.5	Andesite	-	10560	406
99-DD-204	169.9	171.6	Andesite	-	3995	233
99-DD-204	178.3	179.9	Andesite	-	8576	327
99-DD-204	181.7	183.2	Andesite	-	12170	561
99-DD-204	185.5	186.9	Andesite	-	13107	625
99-DD-205	162.95	163.44	Andesite	-	7910	-
99-DD-205	163.45	163.9	Andesite	-	7426	-
99-DD-205	163.9	164.35	Andesite	-	5452	-
99-DD-205	166	166.45	Andesite	-	9415	-
99-DD-205	171.95	172.45	Andesite	-	6893	-
99-DD-205	172.45	172.9	Andesite	-	5670	-
00-DD-207	29.8	29.1	Andesite	146.5	3070	-
00-DD-207	40.6	41.2	Andesite	145.9	6810	-
00-DD-207	75.7	76.5	Andesite	154	11170	-
00-DD-207	91.75	92.7	Andesite	166.9	5390	-
00-DD-209	7.8	8.6	Andesite	155.4	7310	-
99-DD-209	30.8	31.4	Andesite	136.1	4830	-
99-DD-209	59	59.8	Andesite	173.3	9730	-
99-DD-209	85.75	86.4	Andesite	148.3	2230	-
99-DD-209	100	100.5	Andesite	147.6	4280	-
01-DD-222	61.33	62.01	Andesite	155.9	20360	-
01-DD-223	15.6	16.7	Andesite	154	5710	-
01-DD-223	48.7	49.5	Andesite	160.3	6130	-
T 01-DD-223	70.5	71	Andesite	148.8	4580	-

TABLE A1 - Unconfined Compressive Strength Test Results

Boring ID	Depth (ft bgs) from	Depth (ft bgs) to	Rock Type	Moist Unit Weight	Unconfined Compressive	Young's Modulus
01-DD-223	107.3	108.6	Andesite	138	3170	-
01-DD-224	120.9	121.5	Basaltic Andesite	168.7	9300	-
01-DD-224	135.4	136.5	Basaltic Andesite	159.2	4730	-
01-DD-226	39.4	40.1	Andesite	142.7	3750	-
01-DD-226	58.9	59.5	Andesite	147	4720	-
01-DD-226	82.25	83	Andesite	153.2	7630	-
01-DD-227	105	105.5	Andesite	148.5	6120	-
01-DD-227	119.5	120.3	Andesite	150.1	7110	-
01-DD-227	129.3	129.8	Andesite	145.4	3840	-
01-DD-227	142.6	143.3	Andesite	147.4	6370	-
01-DD-228	115.1	116.6	Andesite	205.1	2730	-
01-DD-228	128.8	129.8	Andesite	167.7	5020	-
01-DD-228	142	142.9	Andesite	158.8	7220	-
01-DD-230	41.5	42	Andesite	157.4	3160	-
01-DD-230	100	100.5	Basaltic Andesite	170.4	10390	-
03-DD-237	92.4	92.8	Pyroclastite	146.6	3280	2670
03-DD-237	114.2	114.6	Pyroclastite	150.2	4260	-
03-DD-231	35.0	35.4	Pyroclastite	139.1	1710	-
03-DD-231	112.4	112.9	Pyroclastite	139.3	3510	-

Notes:
*Specimen had hairline crack before test.

bgs - below ground surface

Unconfined Compressive Strength corrected in accordance with ASTM D-2938 for cores with a length to diameter ratio of less than 2.

Boring 94-DD-80 is not located on any of the drawings or figures and is located at WA State coordinates 1763725.70 E and 102238.22 N.

TABLE A2 - Direct Shear Test Results

Borehole	Interval (ft bgs)		Bedrock Material	Normal	Shear	Friction
	from	to		Stress (psi)	Stress (psi)	Angle (phi)
99-DD-205	153.3	154	Andesite	50	66	52.64
99-DD-205	179.5	180	Andesite	50	46	42.8
99-DD-205	183.5	184	Andesite	50	44	41.54
99-DD-205	184.5	185.5	Andesite	50	95	62.14
99-DD-205	153.3	154	Andesite	100	100	44.89
99-DD-205	179.5	180	Andesite	100	84	39.86
99-DD-205	183.5	184	Andesite	100	79	38.17
99-DD-205	184.5	185.5	Andesite	100	146	55.55
99-DD-205	153.3	154	Andesite	150	178	49.82
99-DD-205	179.5	180	Andesite	150	111	36.48
99-DD-205	183.5	184	Andesite	150	107	35.6
99-DD-205	184.5	185.5	Andesite	150	180	50.13
00-DD-209	172.5	173	Andesite	50	50	45.23
00-DD-209	161.5	-	Andesite	50	53	46.61
00-DD-209	172.5	173	Andesite	100	84	40.16
00-DD-209	161.5	-	Andesite	100	76	37.27
00-DD-209	172.5	173	Andesite	150	115	37.5
00-DD-209	161.5	-	Andesite	150	98	33.16
01-DD-222	21.4	22.3	Andesite	15	12	38.66
01-DD-222	47	48	Andesite	15	23	56.89
01-DD-222	21.4	22.3	Andesite	50	27	28.37
01-DD-222	47	48	Andesite	50	47	43.23
01-DD-222	21.4	22.3	Andesite	150	69	24.7
01-DD-222	47	48	Andesite	150	125	39.81
01-DD-223	49.4	50.3	Andesite	15	31	64.18
01-DD-223	49.4	50.3	Andesite	50	73	55.59
01-DD-223	49.4	50.3	Andesite	150	167	48.07
01-DD-224	135.4	136.5	Basaltic Andesite	15	9	30.96
01-DD-224	135.4	136.5	Basaltic Andesite	50	31	31.8
01-DD-224	135.4	136.5	Basaltic Andesite	150	79	27.77
01-DD-226	21.15	21.5	Andesite	15	10	33.69
01-DD-226	21.15	21.5	Andesite	50	40	38.66
01-DD-226	21.15	21.5	Andesite	150	145	44.03
01-DD-228	142	142.9	Andesite	15	9	30.96
01-DD-228	142	142.9	Andesite	50	35	34.99
01-DD-228	142	142.9	Andesite	150	79	27.77
03-DD-233	109.3	-	Pyroclastite	15	15.3	
03-DD-233	109.3	-	Pyroclastite	45		
03-DD-233	109.3	-	Pyroclastite	200		
03-DD-234	44.4	-	Pyroclastite	15		
03-DD-234	44.4	-	Pyroclastite	45	34.4	
03-DD-234	44.4	-	Pyroclastite	200		
03-DD-237	99.2	-	Pyroclastite	15		
03-DD-237	99.5	-	Pyroclastite	15		
03-DD-237	99.2	-	Pyroclastite	45	33.9	
03-DD-237	99.5	-	Pyroclastite	45		
03-DD-237	99.2	-	Pyroclastite	200		
03-DD-237	99.5	-	Pyroclastite	200	121.7	

TABLE A3 - Splitting Tensile Strength Test Results

Borehole	Interval (ft bgs)		Bedrock	Tensile
	from	to	Material	Strength (psi)
94-DD-85*	10.1	10.5	Andesite	500
94-DD-85	10.5	10.8	Andesite	440
94-DD-85*	11.7	12	Andesite	110
99-DD-201	144	145.8	Andesite	2438
99-DD-201	154	155.6	Andesite	2540
99-DD-201	169.2	171	Andesite	2538
99-DD-201	187.2	188.7	Andesite	933
99-DD-203	137	138	Andesite	413
99-DD-203	142.2	144	Andesite	741
99-DD-203	155.6	157.3	Andesite	755
99-DD-203	173.3	174.9	Andesite	1059
99-DD-204	118.3	179.9	Andesite	993
99-DD-204	141.7	143.6	Andesite	641
99-DD-204	152	152.9	Andesite	2008
99-DD-204	158	159.5	Andesite	1358
99-DD-204	169.9	171.6	Andesite	1056
99-DD-204	185.5	186.9	Andesite	2476

*Specimen had a hyperbolic open seam before test.

TABLE A4 - Compresional (P) and Shear (S) Wave Velocities and Poisson's Ratio

Borehole	Depth (ft bgs)	Bedrock Material	P-wave Vp (ft/s)	S-wave Vs (ft/s)	Poisson's Ratio
99-DD-201	96	Andesite	11400	6500	0.2591
99-DD-201	100	Andesite	11100	6500	0.2391
99-DD-201	104	Andesite	12800	6100	0.3531
99-DD-201	108	Andesite	14200	5900	0.3957
99-DD-201	112	Andesite	13250	6850	0.3176
99-DD-201	124	Andesite	12800	5950	0.3622
99-DD-201	128	Andesite	13500	6050	0.3743
99-DD-201	132	Andesite	12750	7100	0.2753
99-DD-201	136	Andesite	14250	7900	0.2781
99-DD-201	140	Andesite	17250	8500	0.3397
99-DD-201	144	Andesite	16600	7300	0.3801
99-DD-201	148	Andesite	15400	6800	0.3789
99-DD-201	152	Andesite	17600	8550	0.3456
99-DD-201	156	Andesite	16600	9400	0.264
99-DD-201	160	Andesite	16250	8250	0.3264
99-DD-201	164	Andesite	15600	7600	0.3444
99-DD-201	168	Andesite	14600	7500	0.3208
99-DD-201	172	Andesite	11500	7150	0.1849
99-DD-201	176	Andesite	12100	7100	0.2374
99-DD-201	180	Andesite	12850	7900	0.1962
99-DD-201	184	Andesite	12250	7850	0.1516
99-DD-204	68	Andesite	9900	5400	0.2882
99-DD-204	72	Andesite	10400	5750	0.2799
99-DD-204	76	Andesite	10600	5750	0.2915
99-DD-204	80	Andesite	10700	7000	0.1259
99-DD-204	84	Andesite	13250	7900	0.2242
99-DD-204	88	Andesite	17150	9500	0.2787
99-DD-204	92	Andesite	13400	7900	0.2336
99-DD-204	108	Andesite	9800	6700	0.0612
99-DD-204	124	Andesite	14700	7400	0.3303
99-DD-204	128	Andesite	16400	8100	0.3387
99-DD-204	132	Andesite	17200	8750	0.3254
99-DD-204	136	Andesite	15600	5500	0.429
99-DD-204	140	Andesite	9700	6400	0.1145
99-DD-204	148	Andesite	12900	7750	0.2176
99-DD-204	152	Andesite	14500	8350	0.2519
99-DD-204	156	Andesite	14300	7500	0.3103
99-DD-204	160	Andesite	14250	9200	0.1426
99-DD-204	164	Andesite	15100	9750	0.1425
99-DD-204	168	Andesite	13850	7500	0.2925
99-DD-204	172	Andesite	14500	8350	0.2519
99-DD-204	176	Andesite	14900	8300	0.275
99-DD-204	180	Andesite	14950	8900	0.2255
99-DD-204	184	Andesite	14000	8100	0.2484
99-DD-204	188	Andesite	12200	6300	0.3182
99-DD-204	192	Andesite	12100	6450	0.3015

TABLE A4 - Compresional (P) and Shear (S) Wave Velocities and Poisson's Ratio

Borehole	Depth (ft bgs)	Bedrock Material	P-wave Vp (ft/s)	S-wave Vs (ft/s)	Poisson's Ratio
99-DD-204	196	Andesite	13350	7600	0.2603
99-DD-205	16	Andesite	10200	5150	0.3289
99-DD-205	20	Andesite	9500	5100	0.2976
99-DD-205	24	Andesite	9950	5050	0.3265
99-DD-205	28	Andesite	11000	7450	0.0763
99-DD-205	36	Andesite	13400	7850	0.2387
99-DD-205	40	Andesite	13300	6050	0.3695
99-DD-205	44	Andesite	13400	7500	0.2719
99-DD-205	52	Andesite	12750	7800	0.201
99-DD-205	60	Andesite	11200	7600	0.0733
99-DD-205	64	Andesite	12200	7350	0.2151
99-DD-205	72	Andesite	11000	7450	0.0763
99-DD-205	76	Andesite	11300	6950	0.1958
99-DD-205	80	Andesite	11050	6850	0.1879
99-DD-205	88	Andesite	12500	6500	0.3147
99-DD-205	92	Andesite	13300	7800	0.2379
99-DD-205	96	Andesite	12250	7200	0.2361
99-DD-205	100	Andesite	11800	7100	0.2163
99-DD-205	104	Andesite	12400	7200	0.2457
99-DD-205	108	Andesite	14200	6500	0.3675
99-DD-205	112	Andesite	12700	6100	0.3501
99-DD-205	116	Andesite	11150	5650	0.3273
99-DD-205	120	Andesite	11300	5800	0.3212
99-DD-205	128	Andesite	10100	6500	0.1465
99-DD-205	132	Andesite	10700	6600	0.1929
99-DD-205	136	Andesite	11100	6900	0.1851
99-DD-205	140	Andesite	11250	6950	0.1914
99-DD-205	144	Andesite	11250	6850	0.2054
99-DD-205	148	Andesite	11100	6750	0.2066
99-DD-205	152	Andesite	10950	6800	0.1861
99-DD-205	156	Andesite	11550	6650	0.2521
99-DD-205	160	Andesite	10900	7700	0.0019
99-DD-205	168	Andesite	11650	7000	0.2175
99-DD-205	172	Andesite	12050	7350	0.2038
99-DD-205	176	Andesite	11700	7800	0.1
99-DD-205	184	Andesite	10750	6500	0.2118
00-DD-209	12	Andesite	10050	5450	0.2917
00-DD-209	16	Andesite	10000	5450	0.2887
00-DD-209	20	Andesite	10200	5500	0.295
00-DD-209	24	Andesite	10150	5500	0.2922
00-DD-209	28	Andesite	10050	5500	0.2862
00-DD-209	32	Andesite	9900	5450	0.2826
00-DD-209	36	Andesite	10000	5750	0.253
00-DD-209	40	Andesite	9650	5650	0.2392
00-DD-209	44	Andesite	10300	6750	0.1236
00-DD-209	56	Andesite	14500	8150	0.2691

TABLE A4 - Compresional (P) and Shear (S) Wave Velocities and Poisson's Ratio

Borehole	Depth (ft bgs)	Bedrock Material	P-wave Vp (ft/s)	S-wave Vs (ft/s)	Poisson's Ratio
00-DD-209	60	Andesite	14250	7700	0.2938
00-DD-209	64	Andesite	14500	5000	0.4325
00-DD-209	68	Andesite	14450	5700	0.4079
00-DD-209	72	Andesite	13600	5800	0.3888
00-DD-209	76	Andesite	12800	6200	0.3467
00-DD-209	80	Andesite	12000	6000	0.3333
00-DD-209	84	Andesite	12350	5950	0.3489
00-DD-209	88	Andesite	13150	5550	0.3916
00-DD-209	92	Andesite	10850	5600	0.3184
00-DD-209	96	Andesite	10450	5850	0.2718
00-DD-209	100	Andesite	11950	7050	0.2331
00-DD-209	104	Andesite	10750	6700	0.1824
00-DD-209	108	Andesite	10850	6750	0.1843
00-DD-209	112	Andesite	11100	6900	0.1851
00-DD-209	116	Andesite	11450	7050	0.1947
00-DD-209	120	Andesite	11350	7000	0.1931
00-DD-209	124	Andesite	11650	7150	0.1979
00-DD-209	128	Andesite	11500	7100	0.192
00-DD-209	132	Andesite	12000	7850	0.126
00-DD-209	140	Andesite	10800	6850	0.1635
00-DD-209	144	Andesite	11050	6900	0.1804
00-DD-209	148	Andesite	11100	6850	0.1925
00-DD-209	152	Andesite	12000	7200	0.2188
00-DD-209	156	Andesite	13650	8100	0.2282
00-DD-209	160	Andesite	16700	6900	0.3971
00-DD-209	164	Andesite	16350	6950	0.3897
00-DD-217	40	Andesite	13050	7900	0.2108
00-DD-217	44	Andesite	13500	7850	0.2446
00-DD-217	48	Andesite	14650	8550	0.2417
00-DD-217	52	Andesite	14600	8350	0.257
00-DD-217	56	Andesite	15250	6850	0.3736
00-DD-217	60	Andesite	15950	7150	0.3743
00-DD-217	64	Andesite	15350	6750	0.3801
00-DD-217	68	Andesite	14750	6450	0.3818
00-DD-217	72	Andesite	13900	5800	0.3946
00-DD-217	76	Andesite	15250	5700	0.4188
00-DD-217	80	Andesite	13600	6450	0.3549
00-DD-217	84	Andesite	13350	6500	0.3446
00-DD-217	88	Andesite	13550	6450	0.3535
00-DD-217	92	Andesite	15250	6750	0.3782
00-DD-217	96	Andesite	13100	6450	0.34
00-DD-217	100	Andesite	12050	5900	0.3423
00-DD-217	104	Andesite	12650	5400	0.3886
00-DD-217	108	Andesite	12050	5800	0.3492
00-DD-217	112	Andesite	11150	6700	0.2174
00-DD-217	116	Andesite	11350	6750	0.2264

TABLE A4 - Compresional (P) and Shear (S) Wave Velocities and Poisson's Ratio

Borehole	Depth (ft bgs)	Bedrock Material	P-wave Vp (ft/s)	S-wave Vs (ft/s)	Poisson's Ratio
00-DD-217	132	Andesite	14000	9050	0.1411
03-DD-231	57.4	Pyroclastite	-	-	0.29
03-DD-231	93.7	Pyroclastite	-	-	0.26
03-DD-234	103.7	Pyroclastite	-	-	0.25
03-DD-237	55.7	Pyroclastite	-	-	0.29
03-DD-237	92.8	Pyroclastite	-	-	0.42
03-DD-237	99.6	Pyroclastite	-	-	0.5

TABLE A5 - Joint Condition Data

Boring	Depth, ft		Persistance		Separation		Roughness		Infilling		Weathering		Total
ID	From	To	Length	Rating	Aperture	Rating	Description	Rating	Description	Rating	Class	Rating	Rating
99-DD-205	0	6	3 -10 m	2	<0.1 mm	5	Rough	5	Hard, <5mm	4	SW	5	21
99-DD-205	6	11	3 -10 m	2	<0.1 mm	5	Rough	5	Soft, <5mm	2	SW	5	19
99-DD-205	11	13	3 -10 m	2	<0.1 mm	5	Rough	5	Hard, <5mm	4	SW	5	21
99-DD-205	13	18	3 -10 m	2	<0.1 mm	5	Sl R/Sm	2	Hard, >5mm	2	SW	5	16
99-DD-205	18	23	3 -10 m	2	<0.1 mm	5	Sl R/Sm	2	Hard, <5mm	4	SW	5	18
99-DD-205	23	25	3 -10 m	2	<0.1 mm	5	Rough	5	Hard, <5mm	4	U	6	22
99-DD-205	25	30	3 -10 m	2	<0.1 mm	5	Rough	5	Hard, >5mm	2	U	6	20
99-DD-205	30	32	3 -10 m	2	<0.1 mm	5	Sl. Rough	3	Hard, >5mm	2	U	6	18
99-DD-205	32	37	3 -10 m	2	<0.1 mm	5	Rough	5	Hard, <5mm	4	U	6	22
99-DD-205	37	38	3 -10 m	2	<0.1 mm	5	Sl R/Sm	2	Hard, >5mm	2	U	6	17
99-DD-205	38	43	3 -10 m	2	<0.1 mm	5	Sl R/Sm	2	Hard, <5mm	4	U	6	19
99-DD-205	43	48	3 -10 m	2	<0.1 mm	5	Sl R/Sm	2	Hard, >5mm	2	U	6	17
99-DD-205	48	53	3 -10 m	2	<0.1 mm	5	Sl R/Sm	2	Hard, <5mm	4	U	6	19
99-DD-205	53	58	3 -10 m	2	<0.1 mm	5	Rough	5	Hard, >5mm	2	U	6	20
99-DD-205	58	63	3 -10 m	2	<0.1 mm	5	Sl R/Sm	2	Hard, <5mm	4	U	6	19
99-DD-205	63	68	3 -10 m	2	<0.1 mm	5	Sl. Rough	3	Hard, >5mm	2	U	6	18
99-DD-205	68	73	3 -10 m	2	<0.1 mm	5	Sl R/Sm	2	Hard, <5mm	4	U	6	19
99-DD-205	73	78	3 -10 m	2	<0.1 mm	5	V. Rough	6	None	6	U	6	25
99-DD-205	78	83	3 -10 m	2	<0.1 mm	5	V. Rough	6	None	6	U	6	25
99-DD-205	83	88	3 -10 m	2	<0.1 mm	5	Rough	5	Hard, >5mm	2	U	6	20
99-DD-205	88	93	3 -10 m	2	<0.1 mm	5	Sl R/Sm	2	Hard, <5mm	4	U	6	19
99-DD-205	93	98	3 -10 m	2	<0.1 mm	5	Sl R/Sm	2	Hard, <5mm	4	U	6	19
99-DD-205	98	103	3 -10 m	2	<0.1 mm	5	Smooth	1	Hard, <5mm	4	U	6	18
99-DD-205	103	108	3 -10 m	2	<0.1 mm	5	Rough	5	Hard, <5mm	4	U	6	22
99-DD-205	108	113	3 -10 m	2	<0.1 mm	5	Sl R/Sm	2	None	6	U	6	21
99-DD-205	113	118	3 -10 m	2	<0.1 mm	5	Rough	5	Hard, >5mm	2	U	6	20
99-DD-205	118	123	3 -10 m	2	<0.1 mm	5	Rough	5	Hard, >5mm	2	U	6	20
99-DD-205	123	128	3 -10 m	2	<0.1 mm	5	Sl R/Sm	2	Hard, >5mm	2	U	6	17
99-DD-205	128	133	3 -10 m	2	<0.1 mm	5	Sl R/Sm	2	Hard, <5mm	4	U	6	19
99-DD-205	133	138	3 -10 m	2	<0.1 mm	5	Sl. Rough	3	Hard, <5mm	4	U	6	20
99-DD-205	138	143	3 -10 m	2	<0.1 mm	5	Rough	5	Hard, <5mm	4	U	6	22

TABLE A5 - Joint Condition Data

Boring ID	Depth, ft		Persistance		Separation		Roughness		Infilling		Weathering		Total Rating
	From	To	Length	Rating	Aperture	Rating	Description	Rating	Description	Rating	Class	Rating	
99-DD-205	143	148	3 -10 m	2	<0.1 mm	5	Rough	5	None	6	U	6	24
99-DD-205	148	153	3 -10 m	2	<0.1 mm	5	Sl. Rough	3	Hard, >5mm	2	U	6	18
99-DD-205	153	158	3 -10 m	2	<0.1 mm	5	Sl R/Sm	2	Hard, <5mm	4	U	6	19
99-DD-205	158	162.9	3 -10 m	2	<0.1 mm	5	Rough	5	Hard, >5mm	2	U	6	20
99-DD-205	162.9	168	3 -10 m	2	<0.1 mm	5	Rough	5	None	6	U	6	24
99-DD-205	168	173	3 -10 m	2	<0.1 mm	5	Rough	5	None	6	U	6	24
99-DD-205	173	178	3 -10 m	2	<0.1 mm	5	Sl R/Sm	2	Hard, <5mm	4	U	6	19
99-DD-205	178	183	3 -10 m	2	<0.1 mm	5	Rough	5	None	6	U	6	24
99-DD-205	183	188	3 -10 m	2	<0.1 mm	5	Rough	5	Hard, >5mm	2	U	6	20
99-DD-205	188	193	3 -10 m	2	<0.1 mm	5	Rough	5	Hard, <5mm	4	U	6	22
99-DD-209	0	5	3 -10 m	2	<0.1 mm	5	Smooth	1	None	6	U	6	20
99-DD-209	5	10	3 -10 m	2	<0.1 mm	5	Rough	5	Soft, <5mm	2	SW	5	19
99-DD-209	10	15	3 -10 m	2	<0.1 mm	5	Rough	5	Hard, <5mm	4	SW	5	21
99-DD-209	15	20	3 -10 m	2	<0.1 mm	5	Smooth	1	None	6	MW	3	17
99-DD-209	20	25	3 -10 m	2	<0.1 mm	5	Smooth	1	None	6	MW	3	17
99-DD-209	25	30	3 -10 m	2	<0.1 mm	5	Smooth	1	None	6	U	6	20
99-DD-209	30	35	3 -10 m	2	<0.1 mm	5	Sl. Rough	3	None	6	U	6	22
99-DD-209	35	40	3 -10 m	2	<0.1 mm	5	Rough	5	None	6	U	6	24
99-DD-209	40	45	3 -10 m	2	<0.1 mm	5	Sl. Rough	3	None	6	SW	5	21
99-DD-209	45	50	3 -10 m	2	<0.1 mm	5	Sl. Rough	3	Soft, <5mm	2	SW	5	17
99-DD-209	50	55	3 -10 m	2	<0.1 mm	5	Rough	5	Soft, <5mm	2	SW	5	19
99-DD-209	55	60	3 -10 m	2	<0.1 mm	5	Rough	5	None	6	SW	5	23
99-DD-209	60	65	3 -10 m	2	1-5 mm	1	Sl R/Sm	2	None	6	SW	5	16
99-DD-209	65	70	3 -10 m	2	1-5 mm	1	Rough	5	Hard, >5mm	2	U	6	16
99-DD-209	70	75	3 -10 m	2	<0.1 mm	5	Rough	5	Hard, <5mm	4	SW	5	21
99-DD-209	75	80	3 -10 m	2	<0.1 mm	5	Rough	5	Hard, <5mm	4	SW	5	21
99-DD-209	80	85	3 -10 m	2	<0.1 mm	5	Rough	5	None	6	SW	5	23
99-DD-209	85	90	3 -10 m	2	<0.1 mm	5	Rough	5	Soft, <5mm	2	SW	5	19
99-DD-209	90	95	3 -10 m	2	<0.1 mm	5	Rough	5	Soft, <5mm	2	U	6	20
99-DD-209	95	100	3 -10 m	2	1-5 mm	1	Rough	5	Hard, <5mm	4	U	6	18
99-DD-209	100	105	3 -10 m	2	None	6	Rough	5	None	6	SW	5	24

TABLE A5 - Joint Condition Data

Boring ID	Depth, ft		Persistance		Separation		Roughness		Infilling		Weathering		Total Rating
	From	To	Length	Rating	Aperture	Rating	Description	Rating	Description	Rating	Class	Rating	
99-DD-209	105	110	3 -10 m	2	None	6	Rough	5	None	6	SW	5	24
99-DD-209	110	115	3 -10 m	2	None	6	Rough	5	None	6	SW	5	24
99-DD-209	115	120	3 -10 m	2	None	6	Rough	5	None	6	U	6	25
99-DD-209	120	125	3 -10 m	2	None	6	Rough	5	None	6	U	6	25
99-DD-209	125	130	3 -10 m	2	None	6	Rough	5	None	6	U	6	25
99-DD-209	130	135	3 -10 m	2	None	6	Rough	5	Soft, <5mm	2	SW	5	20
99-DD-209	135	140	3 -10 m	2	<0.1 mm	5	Rough	5	None	6	U	6	24
99-DD-209	140	145	3 -10 m	2	<0.1 mm	5	Rough	5	Soft, <5mm	2	MW	3	17
99-DD-209	145	150	3 -10 m	2	<0.1 mm	5	Rough	5	Hard, <5mm	4	SW	5	21
99-DD-209	150	155	3 -10 m	2	<0.1 mm	5	Rough	5	Hard, <5mm	4	SW	5	21
99-DD-209	155	160	3 -10 m	2	<0.1 mm	5	Rough	5	Hard, <5mm	4	SW	5	21
99-DD-209	160	164	3 -10 m	2	<0.1 mm	5	Rough	5	Hard, <5mm	4	SW	5	21
99-DD-209	164	169	3 -10 m	2	.1 -1 mm	4	Rough	5	Soft, >5mm	0	SW	5	16
99-DD-209	169	174	3 -10 m	2	.1 -1 mm	4	Rough	5	Soft, >5mm	0	SW	5	16
99-DD-209	174	175	3 -10 m	2	.1 -1 mm	4	Rough	5	Soft, >5mm	0	SW	5	16
99-DD-209	174	180	3 -10 m	2	.1 -1 mm	4	Rough	5	Soft, <5mm	2	SW	5	18
00-DD-213	0	2.1	3 -10 m	2	<0.1 mm	5	Rough	5	Hard, <5mm	4	MW	3	19
00-DD-213	2.1	5	3 -10 m	2	<0.1 mm	5	Rough	5	Hard, <5mm	4	U	6	22
00-DD-213	5	8.9	3 -10 m	2	<0.1 mm	5	Rough	5	Hard, <5mm	4	U	6	22
00-DD-213	8.9	13.9	3 -10 m	2	<0.1 mm	5	Rough	5	Hard, <5mm	4	U	6	22
00-DD-213	13.9	15	3 -10 m	2	<0.1 mm	5	Rough	5	Hard, <5mm	4	U	6	22
00-DD-213	15	20	3 -10 m	2	<0.1 mm	5	Sl. Rough	3	Soft, <5mm	2	U	6	18
00-DD-213	20	20.8	3 -10 m	2	.1 -1 mm	4	Sl. Rough	3	Soft, <5mm	2	U	6	17
00-DD-213	20.8	25	3 -10 m	2	.1 -1 mm	4	Sl. Rough	3	Soft, <5mm	2	U	6	17
00-DD-213	25	27.7	3 -10 m	2	1-5 mm	1	Smooth	1	Soft, <5mm	2	U	6	12
00-DD-213	27.7	32.8	3 -10 m	2	.1 -1 mm	4	Rough	5	Soft, <5mm	2	U	6	19
00-DD-213	32.8	35	3 -10 m	2	.1 -1 mm	4	Rough	5	Soft, <5mm	2	U	6	19
00-DD-213	35	39.7	3 -10 m	2	1-5 mm	1	Smooth	1	Soft, <5mm	2	U	6	12
00-DD-213	39.7	43	3 -10 m	2	1-5 mm	1	Smooth	1	Soft, <5mm	2	U	6	12
00-DD-213	43	45	3 -10 m	2	1-5 mm	1	Smooth	1	Soft, <5mm	2	U	6	12
00-DD-213	45	49.3	3 -10 m	2	.1 -1 mm	4	Sl. Rough	3	Hard, <5mm	4	U	6	19

TABLE A5 - Joint Condition Data

Boring ID	Depth, ft		Persistance		Separation		Roughness		Infilling		Weathering		Total Rating
	From	To	Length	Rating	Aperture	Rating	Description	Rating	Description	Rating	Class	Rating	
00-DD-213	49.3	54.4	3 -10 m	2	<0.1 mm	5	Rough	5	Hard, >5mm	2	U	6	20
00-DD-213	54.4	59.4	3 -10 m	2	<0.1 mm	5	Sl. Rough	3	Hard, >5mm	2	U	6	18
00-DD-213	59.4	64.4	3 -10 m	2	<0.1 mm	5	Sl. Rough	3	Hard, <5mm	4	U	6	20
00-DD-213	64.4	69.2	3 -10 m	2	<0.1 mm	5	Rough	5	Hard, >5mm	2	U	6	20
00-DD-213	69.2	74.2	3 -10 m	2	None	6	Rough	5	Hard, <5mm	4	U	6	23
00-DD-213	74.2	75	3 -10 m	2	None	6	Sl R/Sm	2	None	6	U	6	22
00-DD-213	75	80	3 -10 m	2	None	6	Rough	5	None	6	U	6	25
00-DD-213	80	84.7	3 -10 m	2	<0.1 mm	5	Rough	5	Hard, <5mm	4	U	6	22
00-DD-213	84.7	89.8	3 -10 m	2	.1 -1 mm	4	Rough	5	Hard, <5mm	4	U	6	21
00-DD-213	89.8	94.9	3 -10 m	2	<0.1 mm	5	Rough	5	Hard, <5mm	4	U	6	22
00-DD-213	94.9	100	3 -10 m	2	.1 -1 mm	4	Rough	5	Hard, >5mm	2	U	6	19
00-DD-213	100	105	3 -10 m	2	<0.1 mm	5	Rough	5	Hard, <5mm	4	U	6	22
00-DD-213	105	110	3 -10 m	2	<0.1 mm	5	Rough	5	Hard, <5mm	4	U	6	22
00-DD-213	110	115	3 -10 m	2	<0.1 mm	5	Rough	5	Hard, <5mm	4	U	6	22
00-DD-213	115	120	3 -10 m	2	<0.1 mm	5	Rough	5	Hard, <5mm	4	U	6	22
00-DD-213	120	125	3 -10 m	2	1-5 mm	1	Rough	5	Soft, <5mm	2	U	6	16
00-DD-213	125	130	3 -10 m	2	<0.1 mm	5	Rough	5	Hard, <5mm	4	U	6	22
00-DD-213	130	135	3 -10 m	2	<0.1 mm	5	Rough	5	Hard, <5mm	4	U	6	22
00-DD-213	135	140	3 -10 m	2	<0.1 mm	5	Rough	5	Hard, <5mm	4	U	6	22
00-DD-213	140	145	3 -10 m	2	<0.1 mm	5	Rough	5	Hard, <5mm	4	U	6	22
00-DD-214	0	5	3 -10 m	2	<0.1 mm	5	Rough	5	None	6	MW	3	21
00-DD-214	5	10	3 -10 m	2	<0.1 mm	5	Rough	5	None	6	U	6	24
00-DD-214	10	15	3 -10 m	2	<0.1 mm	5	Rough	5	None	6	MW	3	21
00-DD-214	15	20	3 -10 m	2	<0.1 mm	5	Rough	5	None	6	SW	5	23
00-DD-214	20	25	3 -10 m	2	<0.1 mm	5	Rough	5	None	6	U	6	24
00-DD-214	25	30	3 -10 m	2	<0.1 mm	5	Rough	5	None	6	U	6	24
00-DD-214	30	35	3 -10 m	2	<0.1 mm	5	Rough	5	None	6	U	6	24
00-DD-214	35	40	3 -10 m	2	<0.1 mm	5	Rough	5	None	6	U	6	24
00-DD-214	40	45	3 -10 m	2	<0.1 mm	5	Rough	5	None	6	U	6	24
00-DD-214	45	50	3 -10 m	2	<0.1 mm	5	Rough	5	None	6	U	6	24
00-DD-214	50	55	3 -10 m	2	<0.1 mm	5	Rough	5	None	6	SW	5	23

TABLE A5 - Joint Condition Data

Boring ID	Depth, ft		Persistance		Separation		Roughness		Infilling		Weathering		Total Rating
	From	To	Length	Rating	Aperture	Rating	Description	Rating	Description	Rating	Class	Rating	
00-DD-214	55	60	3 -10 m	2	.1 -1 mm	4	Rough	5	Hard, <5mm	4	SW	5	20
00-DD-214	60	65	3 -10 m	2	.1 -1 mm	4	Rough	5	Hard, <5mm	4	SW	5	20
00-DD-214	65	70	3 -10 m	2	<0.1 mm	5	Rough	5	None	6	SW	5	23
00-DD-214	70	75	3 -10 m	2	<0.1 mm	5	Rough	5	None	6	SW	5	23
00-DD-214	75	78.9	3 -10 m	2	<0.1 mm	5	Rough	5	None	6	SW	5	23
00-DD-214	78.9	84.1	3 -10 m	2	<0.1 mm	5	Rough	5	None	6	SW	5	23
00-DD-214	84.1	89.3	3 -10 m	2	<0.1 mm	5	Rough	5	None	6	SW	5	23
00-DD-214	89.3	94.4	3 -10 m	2	<0.1 mm	5	Rough	5	Hard, <5mm	4	SW	5	21
00-DD-214	94.4	99.4	3 -10 m	2	<0.1 mm	5	Rough	5	Hard, <5mm	4	SW	5	21
00-DD-214	99.4	103.2	3 -10 m	2	.1 -1 mm	4	Rough	5	Hard, <5mm	4	SW	5	20
00-DD-214	103.2	105.7	3 -10 m	2	<0.1 mm	5	Rough	5	None	6	SW	5	23
00-DD-214	105.7	110.8	3 -10 m	2	<0.1 mm	5	Rough	5	None	6	SW	5	23
00-DD-214	110.8	115	3 -10 m	2	<0.1 mm	5	Rough	5	None	6	SW	5	23
00-DD-214	115	120	3 -10 m	2	<0.1 mm	5	Rough	5	None	6	SW	5	23
00-DD-214	120	125	3 -10 m	2	<0.1 mm	5	Rough	5	None	6	SW	5	23
00-DD-214	125	130	3 -10 m	2	None	6	Rough	5	Soft, <5mm	2	U	6	21
00-DD-214	130	135	3 -10 m	2	.1 -1 mm	4	Rough	5	Soft, <5mm	2	SW	5	18
00-DD-214	135	140	3 -10 m	2	<0.1 mm	5	Rough	5	Hard, <5mm	4	SW	5	21
00-DD-214	140	145	3 -10 m	2	.1 -1 mm	4	Rough	5	Soft, <5mm	2	SW	5	18
00-DD-214	145	150	3 -10 m	2	.1 -1 mm	4	Rough	5	Soft, <5mm	2	SW	5	18
00-DD-214	150	155	3 -10 m	2	<0.1 mm	5	Rough	5	None	6	SW	5	23
00-DD-214	155	160	3 -10 m	2	<0.1 mm	5	Rough	5	None	6	SW	5	23
00-DD-214	160	165	3 -10 m	2	<0.1 mm	5	Rough	5	None	6	SW	5	23
00-DD-214	165	170	3 -10 m	2	<0.1 mm	5	Rough	5	None	6	U	6	24
00-DD-217	0	5	3 -10 m	2	<0.1 mm	5	Rough	5	None	6	U	6	24
00-DD-217	5	10	3 -10 m	2	<0.1 mm	5	Rough	5	None	6	U	6	24
00-DD-217	10	15	3 -10 m	2	<0.1 mm	5	Rough	5	None	6	U	6	24
00-DD-217	15	20	3 -10 m	2	<0.1 mm	5	Rough	5	None	6	U	6	24
00-DD-217	20	24.5	3 -10 m	2	<0.1 mm	5	Rough	5	None	6	U	6	24
00-DD-217	24.5	29.6	3 -10 m	2	<0.1 mm	5	Rough	5	None	6	U	6	24
00-DD-217	29.6	34.9	3 -10 m	2	<0.1 mm	5	Rough	5	None	6	U	6	24

TABLE A5 - Joint Condition Data

Boring ID	Depth, ft		Persistance		Separation		Roughness		Infilling		Weathering		Total Rating
	From	To	Length	Rating	Aperture	Rating	Description	Rating	Description	Rating	Class	Rating	
00-DD-217	34.9	39.9	3 -10 m	2	<0.1 mm	5	Rough	5	None	6	U	6	24
00-DD-217	39.9	45	3 -10 m	2	<0.1 mm	5	Rough	5	None	6	U	6	24
00-DD-217	45	50	3 -10 m	2	<0.1 mm	5	Rough	5	None	6	U	6	24
00-DD-217	50	54.6	3 -10 m	2	<0.1 mm	5	Rough	5	None	6	U	6	24
00-DD-217	54.6	55	3 -10 m	2	<0.1 mm	5	Rough	5	None	6	U	6	24
00-DD-217	55	60	3 -10 m	2	<0.1 mm	5	Rough	5	None	6	U	6	24
00-DD-217	60	65	3 -10 m	2	<0.1 mm	5	Rough	5	None	6	U	6	24
00-DD-217	65	70	3 -10 m	2	<0.1 mm	5	Rough	5	None	6	U	6	24
00-DD-217	70	75	3 -10 m	2	<0.1 mm	5	Rough	5	None	6	U	6	24
00-DD-217	75	80	3 -10 m	2	<0.1 mm	5	Rough	5	None	6	U	6	24
00-DD-217	80	85	3 -10 m	2	<0.1 mm	5	Rough	5	None	6	U	6	24
00-DD-217	85	90	3 -10 m	2	<0.1 mm	5	Rough	5	None	6	U	6	24
00-DD-217	90	95	3 -10 m	2	<0.1 mm	5	Rough	5	None	6	U	6	24
00-DD-217	95	100	3 -10 m	2	<0.1 mm	5	Rough	5	None	6	U	6	24
00-DD-217	100	105	3 -10 m	2	<0.1 mm	5	Rough	5	None	6	U	6	24
00-DD-217	105	110	3 -10 m	2	<0.1 mm	5	Rough	5	None	6	U	6	24
00-DD-217	110	115	3 -10 m	2	<0.1 mm	5	Rough	5	None	6	U	6	24
00-DD-217	115	120	3 -10 m	2	<0.1 mm	5	Rough	5	None	6	U	6	24
00-DD-217	120	125	3 -10 m	2	<0.1 mm	5	Rough	5	None	6	U	6	24
00-DD-217	125	130	3 -10 m	2	<0.1 mm	5	Rough	5	None	6	U	6	24
00-DD-217	130	135	3 -10 m	2	<0.1 mm	5	Rough	5	None	6	U	6	24
00-DD-217	135	140	3 -10 m	2	<0.1 mm	5	Rough	5	None	6	U	6	24
00-DD-217	140	143.5	3 -10 m	2	<0.1 mm	5	Rough	5	None	6	U	6	24
00-DD-217	143.5	145	3 -10 m	2	<0.1 mm	5	Rough	5	None	6	U	6	24
00-DD-217	145	150	3 -10 m	2	<0.1 mm	5	Rough	5	None	6	U	6	24
00-DD-217	150	150	3 -10 m	2	<0.1 mm	5	Rough	5	None	6	U	6	24
00-DD-218	2.1	5	3 -10 m	2	<0.1 mm	5	Rough	5	None	6	U	6	24
00-DD-218	5	10	3 -10 m	2	<0.1 mm	5	Rough	5	None	6	U	6	24
00-DD-218	10	15	3 -10 m	2	<0.1 mm	5	Rough	5	None	6	U	6	24
00-DD-218	15	20	3 -10 m	2	<0.1 mm	5	Rough	5	None	6	U	6	24
00-DD-218	20	25	3 -10 m	2	<0.1 mm	5	Rough	5	None	6	U	6	24

TABLE A5 - Joint Condition Data

Boring ID	Depth, ft		Persistance		Separation		Roughness		Infilling		Weathering		Total Rating
	From	To	Length	Rating	Aperture	Rating	Description	Rating	Description	Rating	Class	Rating	
00-DD-218	25	30	3 -10 m	2	<0.1 mm	5	Rough	5	None	6	U	6	24
00-DD-218	30	35	3 -10 m	2	<0.1 mm	5	Rough	5	None	6	U	6	24
00-DD-218	35	40	3 -10 m	2	<0.1 mm	5	Rough	5	None	6	U	6	24
00-DD-218	40	45	3 -10 m	2	<0.1 mm	5	Rough	5	None	6	U	6	24
00-DD-218	45	50	3 -10 m	2	<0.1 mm	5	Rough	5	None	6	U	6	24
00-DD-218	50	55	3 -10 m	2	<0.1 mm	5	Rough	5	None	6	U	6	24
00-DD-218	55	60	3 -10 m	2	<0.1 mm	5	Rough	5	None	6	U	6	24
00-DD-218	60	65	3 -10 m	2	<0.1 mm	5	Rough	5	None	6	U	6	24
00-DD-218	65	70	3 -10 m	2	<0.1 mm	5	Rough	5	None	6	U	6	24
00-DD-218	70	75	3 -10 m	2	<0.1 mm	5	Rough	5	None	6	U	6	24
00-DD-218	75	80	3 -10 m	2	<0.1 mm	5	Rough	5	None	6	U	6	24
00-DD-218	80	85	3 -10 m	2	<0.1 mm	5	Rough	5	None	6	U	6	24
00-DD-218	85	90	3 -10 m	2	<0.1 mm	5	Rough	5	None	6	U	6	24
00-DD-218	90	95	3 -10 m	2	<0.1 mm	5	Rough	5	None	6	U	6	24
00-DD-218	95	100	3 -10 m	2	<0.1 mm	5	Rough	5	None	6	U	6	24
00-DD-218	100	103	3 -10 m	2	<0.1 mm	5	Rough	5	None	6	U	6	24
00-DD-218	103	105	3 -10 m	2	<0.1 mm	5	Rough	5	None	6	U	6	24
00-DD-218	105	110	3 -10 m	2	<0.1 mm	5	Rough	5	None	6	U	6	24
00-DD-218	110	115	3 -10 m	2	<0.1 mm	5	Rough	5	None	6	U	6	24
00-DD-218	115	120	3 -10 m	2	<0.1 mm	5	Rough	5	None	6	U	6	24
00-DD-218	120	125	3 -10 m	2	<0.1 mm	5	Rough	5	None	6	U	6	24
00-DD-218	125	130	3 -10 m	2	<0.1 mm	5	Rough	5	None	6	U	6	24
00-DD-218	130	135	3 -10 m	2	<0.1 mm	5	Rough	5	None	6	U	6	24
00-DD-218	135	140	3 -10 m	2	<0.1 mm	5	Sl. Rough	3	None	6	U	6	22
00-DD-218	140	144.5	3 -10 m	2	<0.1 mm	5	Rough	5	None	6	U	6	24
00-DD-218	144.5	145	3 -10 m	2	<0.1 mm	5	Rough	5	None	6	U	6	24
00-DD-218	145	150	3 -10 m	2	<0.1 mm	5	Rough	5	None	6	U	6	24
01-DD-222	0	1.9											
01-DD-222	1.9	4.6	3 -10 m	2	.1 -1 mm	4	Sl. Rough	3	Hard, <5mm	4	U	6	19
01-DD-222	4.6	5.7	3 -10 m	2	None	6	Sl R/R	4	None	6	U	6	24
01-DD-222	5.7	7.8	3 -10 m	2	None	6	Sl. Rough	3	None	6	U	6	23

TABLE A5 - Joint Condition Data

Boring ID	Depth, ft		Persistance		Separation		Roughness		Infilling		Weathering		Total Rating
	From	To	Length	Rating	Aperture	Rating	Description	Rating	Description	Rating	Class	Rating	
01-DD-222	7.8	12	3 -10 m	2	.1 -1 mm	4	Sl R/Sm	2	Hard, <5mm	4	U	6	18
01-DD-222	12	17	3 -10 m	2	None	6	Sl. Rough	3	None	6	U	6	23
01-DD-222	17	21.1	3 -10 m	2	.1 -1 mm	4	Sl R/R	4	Hard, <5mm	4	U	6	20
01-DD-222	21.1	26.3	3 -10 m	2	None	6	Sl R/Sm	2	None	6	U	6	22
01-DD-222	26.3	31.4	3 -10 m	2	None	6	Sl R/R	4	None	6	U	6	24
01-DD-222	31.4	36.5	3 -10 m	2	.1 -1 mm	4	Sl R/Sm	2	Hard, <5mm	4	U	6	18
01-DD-222	36.5	41.6	3 -10 m	2	None	6	Sl. Rough	3	None	6	U	6	23
01-DD-222	41.6	46.7	3 -10 m	2	None	6	Sl. Rough	3	None	6	U	6	23
01-DD-222	46.7	51.8	3 -10 m	2	None	6	Sl. Rough	3	None	6	U	6	23
01-DD-222	51.8	56.9	3 -10 m	2	None	6	Sl R/Sm	2	None	6	U	6	22
01-DD-222	56.9	62	3 -10 m	2	None	6	Sl. Rough	3	None	6	U	6	23
01-DD-222	62	67.1	3 -10 m	2	None	6	Sl. Rough	3	None	6	U	6	23
01-DD-222	67.1	72	3 -10 m	2	None	6	Sl R/Sm	2	None	6	U	6	22
01-DD-222	72	77.2	3 -10 m	2	None	6	Sl R/Sm	2	None	6	U	6	22
01-DD-222	77.2	82	3 -10 m	2	.1 -1 mm	4	Sl R/Sm	2	Hard, <5mm	4	U	6	18
01-DD-222	82	85.8	3 -10 m	2	.1 -1 mm	4	Sl. Rough	3	Soft, <5mm	2	U	6	17
01-DD-222	85.8	91	3 -10 m	2	.1 -1 mm	4	Sl R/Sm	2	Soft, <5mm	2	U	6	16
01-DD-222	91	95.1	3 -10 m	2	None	6	Sl R/Sm	2	None	6	U	6	22
01-DD-222	95.1	100.3	3 -10 m	2	None	6	Sl R/Sm	2	None	6	U	6	22
01-DD-222	100.3	105.4	3 -10 m	2	None	6	Sl. Rough	3	None	6	U	6	23
01-DD-222	105.4	106.9	3 -10 m	2	None	6	Sl R/Sm	2	None	6	U	6	22
01-DD-222	106.9	109.5	3 -10 m	2	None	6	Sl. Rough	3	None	6	U	6	23
01-DD-222	109.5	110.3	3 -10 m	2	.1 -1 mm	4	Slick.	0	Hard, <5mm	4	U	6	16
01-DD-222	110.3	115.5	3 -10 m	2	None	6	Sl. Rough	3	None	6	U	6	23
01-DD-222	115.5	117.7	3 -10 m	2	None	6	Sl R/Sm	2	None	6	U	6	22
01-DD-222	117.7	122	3 -10 m	2	None	6	Sl R/Sm	2	None	6	U	6	22
01-DD-222	122	125.4	3 -10 m	2	None	6	Sl R/Sm	2	None	6	U	6	22
01-DD-223	0	2.1											0
01-DD-223	2.1	6.5	3 -10 m	2	None	6	Sl. Rough	3	None	6	U	6	23
01-DD-223	6.5	10.6	3 -10 m	2	None	6	Sl. Rough	3	None	6	U	6	23
01-DD-223	10.6	13.5	3 -10 m	2	.1 -1 mm	4	Rough	5	Hard, <5mm	4	U	6	21

TABLE A5 - Joint Condition Data

Boring ID	Depth, ft		Persistance		Separation		Roughness		Infilling		Weathering		Total Rating
	From	To	Length	Rating	Aperture	Rating	Description	Rating	Description	Rating	Class	Rating	
01-DD-223	13.5	18.6	3 -10 m	2	None	6	Sl. Rough	3	None	6	U	6	23
01-DD-223	18.6	23.5	3 -10 m	2	None	6	Sl. Rough	3	None	6	U	6	23
01-DD-223	23.5	28.5	3 -10 m	2	.1 -1 mm	4	Sl. Rough	3	Soft, <5mm	2	U	6	17
01-DD-223	28.5	33.5	3 -10 m	2	None	6	Sl R/Sm	2	None	6	U	6	22
01-DD-223	33.5	38.7	3 -10 m	2	None	6	Sl. Rough	3	None	6	U	6	23
01-DD-223	38.7	43.5	3 -10 m	2	None	6	Sl. Rough	3	None	6	U	6	23
01-DD-223	43.5	48.7	3 -10 m	2	.1 -1 mm	4	Sl R/R	4	Soft, <5mm	2	U	6	18
01-DD-223	48.7	53.5	3 -10 m	2	.1 -1 mm	4	Sl R/Sm	2	None	6	U	6	20
01-DD-223	53.5	58.7	3 -10 m	2	.1 -1 mm	4	Sl R/Sm	2	Hard, <5mm	4	U	6	18
01-DD-223	58.7	63.5	3 -10 m	2	None	6	Sl R/Sm	2	None	6	U	6	22
01-DD-223	63.5	68.6	3 -10 m	2	>5 mm	0	Sl R/Sm	2	Hard, >5mm	2	U	6	12
01-DD-223	68.6	73.2	3 -10 m	2	None	6	V. Rough	6	None	6	U	6	26
01-DD-223	73.2	78.4	3 -10 m	2	.1 -1 mm	4	Sl R/R	4	Hard, <5mm	4	U	6	20
01-DD-223	78.4	83.5	3 -10 m	2	.1 -1 mm	4	Sl R/Sm	2	Hard, <5mm	4	U	6	18
01-DD-223	83.5	88.6	3 -10 m	2	.1 -1 mm	4	Sl R/Sm	2	Soft, <5mm	2	U	6	16
01-DD-223	88.6	93.5	3 -10 m	2	None	6	Sl. Rough	3	None	6	U	6	23
01-DD-223	93.5	98.6	3 -10 m	2	.1 -1 mm	4	Sl. Rough	3	Hard, <5mm	4	U	6	19
01-DD-223	98.6	103.5	3 -10 m	2	.1 -1 mm	4	V. Rough	6	None	6	U	6	24
01-DD-223	103.5	108.6	3 -10 m	2	None	6	Sl R/R	4	Hard, <5mm	4	U	6	22
01-DD-223	108.6	113.3	3 -10 m	2	.1 -1 mm	4	Sl. Rough	3	Soft, <5mm	2	U	6	17
01-DD-223	113.3	118.3	3 -10 m	2	.1 -1 mm	4	Sl. Rough	3	Hard, <5mm	4	U	6	19
01-DD-223	118.3	123.5	3 -10 m	2	.1 -1 mm	4	Sl R/R	4	Hard, <5mm	4	U	6	20
01-DD-223	123.5	128.7	3 -10 m	2	None	6	Sl. Rough	3	None	6	U	6	23
01-DD-223	128.7	131.4	3 -10 m	2	.1 -1 mm	4	Sl R/Sm	2	Hard, <5mm	4	U	6	18
01-DD-224	1.1	1.5											0
01-DD-224	1.5	4.3	3 -10 m	2	.1 -1 mm	4	Rough	5	None	6	U	6	23
01-DD-224	4.3	9	3 -10 m	2	None	6	Sl R/Sm	2	None	6	U	6	22
01-DD-224	9	12.5	3 -10 m	2	.1 -1 mm	4	Sl. Rough	3	Hard, <5mm	4	U	6	19
01-DD-224	12.5	17.5	3 -10 m	2	.1 -1 mm	4	Sl R/Sm	2	Hard, <5mm	4	U	6	18
01-DD-224	17.5	22.5	3 -10 m	2	None	6	Sl R/Sm	2	None	6	U	6	22
01-DD-224	22.5	27.5	3 -10 m	2	.1 -1 mm	4	Sl R/Sm	2	Hard, <5mm	4	U	6	18

TABLE A5 - Joint Condition Data

Boring ID	Depth, ft		Persistance		Separation		Roughness		Infilling		Weathering		Total Rating
	From	To	Length	Rating	Aperture	Rating	Description	Rating	Description	Rating	Class	Rating	
01-DD-224	27.5	32.5	3 -10 m	2	.1 -1 mm	4	Sl R/Sm	2	Hard, <5mm	4	U	6	18
01-DD-224	32.5	37.5	3 -10 m	2	.1 -1 mm	4	Sl R/Sm	2	None	6	U	6	20
01-DD-224	37.5	42.5	3 -10 m	2	None	6	Sl R/Sm	2	None	6	U	6	22
01-DD-224	42.5	47.5	3 -10 m	2	None	6	Sl. Rough	3	None	6	U	6	23
01-DD-224	47.5	52.7	3 -10 m	2	.1 -1 mm	4	Sl R/Sm	2	None	6	U	6	20
01-DD-224	52.7	57.7	3 -10 m	2	.1 -1 mm	4	Sl R/Sm	2	Hard, <5mm	4	U	6	18
01-DD-224	57.7	62.5	3 -10 m	2	None	6	Sl R/Sm	2	None	6	U	6	22
01-DD-224	62.5	67.4	3 -10 m	2	.1 -1 mm	4	Sl R/Sm	2	Hard, <5mm	4	U	6	18
01-DD-224	67.4	72.5	3 -10 m	2	None	6	Sl R/Sm	2	Hard, <5mm	4	U	6	20
01-DD-224	72.5	77.7	3 -10 m	2	None	6	Sl R/Sm	2	None	6	U	6	22
01-DD-224	77.7	82.5	3 -10 m	2	.1 -1 mm	4	Sl. Rough	3	Hard, <5mm	4	U	6	19
01-DD-224	82.5	87.7	3 -10 m	2	.1 -1 mm	4	Sl R/Sm	2	Hard, <5mm	4	U	6	18
01-DD-224	87.7	92.5	3 -10 m	2	None	6	Sl R/Sm	2	None	6	U	6	22
01-DD-224	92.5	97.7	3 -10 m	2	None	6	Sl. Rough	3	None	6	U	6	23
01-DD-224	97.7	102.5	3 -10 m	2	None	6	Sl R/Sm	2	None	6	U	6	22
01-DD-224	102.5	107.6	3 -10 m	2	.1 -1 mm	4	Sl R/Sm	2	None	6	U	6	20
01-DD-224	107.6	112.5	3 -10 m	2	.1 -1 mm	4	Sl R/Sm	2	Hard, <5mm	4	U	6	18
01-DD-224	112.5	115.4	3 -10 m	2	None	6	Sl R/Sm	2	Soft, <5mm	2	U	6	18
01-DD-224	115.4	120.6	3 -10 m	2	None	6	Smooth	1	None	6	U	6	21
01-DD-224	120.6	124.4	3 -10 m	2	None	6	Sl R/Sm	2	None	6	U	6	22
01-DD-224	124.4	129.6	3 -10 m	2	None	6	Sl R/Sm	2	None	6	U	6	22
01-DD-224	129.6	134.6	3 -10 m	2	None	6	Sl. Rough	3	None	6	U	6	23
01-DD-224	134.6	139.8	3 -10 m	2	None	6	Sl. Rough	3	None	6	U	6	23
01-DD-224	139.8	145	3 -10 m	2	None	6	Smooth	1	None	6	U	6	21
01-DD-224	145	150.2	3 -10 m	2	None	6	Sl. Rough	3	None	6	U	6	23
01-DD-225	0	1.3											0
01-DD-225	1.3	3.3	3 -10 m	2	None	6	Sl R/Sm	2	None	6	U	6	22
01-DD-225	3.3	5.4	3 -10 m	2	.1 -1 mm	4	Sl R/R	4	Soft, <5mm	2	SW	5	17
01-DD-225	5.4	8.1	3 -10 m	2	.1 -1 mm	4	Sl R/Sm	2	Hard, <5mm	4	U	6	18
01-DD-225	8.1	10.4	3 -10 m	2	.1 -1 mm	4	Smooth	1	Hard, <5mm	4	U	6	17
01-DD-225	10.4	15	3 -10 m	2	None	6	Sl R/Sm	2	None	6	U	6	22

TABLE A5 - Joint Condition Data

Boring ID	Depth, ft		Persistance		Separation		Roughness		Infilling		Weathering		Total Rating
	From	To	Length	Rating	Aperture	Rating	Description	Rating	Description	Rating	Class	Rating	
01-DD-225	15	20.2	3 -10 m	2	.1 -1 mm	4	Sl R/Sm	2	None	6	U	6	20
01-DD-225	20.2	25.3	3 -10 m	2	None	6	Sl R/Sm	2	None	6	U	6	22
01-DD-225	25.3	28.5	3 -10 m	2	.1 -1 mm	4	Sl R/Sm	2	Hard, <5mm	4	U	6	18
01-DD-225	28.5	33.5	3 -10 m	2	.1 -1 mm	4	Sl R/Sm	2	Soft, <5mm	2	U	6	16
01-DD-225	33.5	38.4	3 -10 m	2	.1 -1 mm	4	Sl R/Sm	2	Hard, <5mm	4	U	6	18
01-DD-225	38.4	41	3 -10 m	2	None	6	Sl R/Sm	2	None	6	U	6	22
01-DD-225	41	46.2	3 -10 m	2	.1 -1 mm	4	Sl R/Sm	2	None	6	U	6	20
01-DD-225	46.2	47.8	3 -10 m	2	None	6	Sl. Rough	3	Hard, <5mm	4	SW	5	20
01-DD-225	47.8	50.5	3 -10 m	2	None	6	Sl R/Sm	2	None	6	HW	1	17
01-DD-225	50.5	55.4	3 -10 m	2	None	6	Sl R/Sm	2	None	6	U	6	22
01-DD-225	55.4	60.4	3 -10 m	2	.1 -1 mm	4	Slick.	0	None	6	U	6	18
01-DD-225	60.4	65.5	3 -10 m	2	.1 -1 mm	4	Sl. Rough	3	Soft, <5mm	2	U	6	17
01-DD-225	65.5	70.5	3 -10 m	2	.1 -1 mm	4	Sl R/Sm	2	Hard, <5mm	4	U	6	18
01-DD-225	70.5	75.7	3 -10 m	2	None	6	Sl R/Sm	2	None	6	U	6	22
01-DD-225	75.7	79.6	3 -10 m	2	None	6	Sl R/Sm	2	None	6	U	6	22
01-DD-225	79.6	81.9	3 -10 m	2	None	6	Smooth	1	None	6	U	6	21
01-DD-225	81.9	85.6	3 -10 m	2	None	6	Slick.	0	None	6	U	6	20
01-DD-225	85.6	90.8	3 -10 m	2	None	6	Sl R/Sm	2	Soft, >5mm	0	U	6	16
01-DD-225	90.8	92.2	3 -10 m	2	.1 -1 mm	4	Smooth	1	Hard, <5mm	4	U	6	17
01-DD-225	92.2	94.7	3 -10 m	2	None	6	Smooth	1	None	6	U	6	21
01-DD-225	94.7	95.7	3 -10 m	2	None	6	Smooth	1	None	6	U	6	21
01-DD-225	95.7	98.7	3 -10 m	2	None	6	Sl R/Sm	2	None	6	U	6	22
01-DD-225	98.7	100.1	3 -10 m	2	.1 -1 mm	4	Sl R/Sm	2	Soft, <5mm	2	U	6	16
01-DD-225	100.1	104.6	3 -10 m	2	None	6	V. Rough	6	Soft, <5mm	2	U	6	22
01-DD-225	104.6	106.1	3 -10 m	2	None	6	V. Rough	6	None	6	U	6	26
01-DD-225	106.1	108	3 -10 m	2	None	6	Smooth	1	None	6	U	6	21
01-DD-225	108	110.6	3 -10 m	2	None	6	Sl R/Sm	2	None	6	U	6	22
01-DD-225	110.6	115.7	3 -10 m	2	None	6	Sl R/Sm	2	None	6	U	6	22
01-DD-225	115.7	120.7	3 -10 m	2	None	6	Smooth	1	None	6	U	6	21
01-DD-225	120.7	123.4	3 -10 m	2	None	6	Smooth	1	None	6	U	6	21
01-DD-225	123.4	127.3	3 -10 m	2	None	6	Sl R/Sm	2	None	6	U	6	22

TABLE A5 - Joint Condition Data

Boring ID	Depth, ft		Persistance		Separation		Roughness		Infilling		Weathering		Total Rating
	From	To	Length	Rating	Aperture	Rating	Description	Rating	Description	Rating	Class	Rating	
01-DD-225	127.3	130.4	3 -10 m	2	None	6	Sl R/Sm	2	None	6	U	6	22
01-DD-225	130.4	135.1	3 -10 m	2	None	6	Sl. Rough	3	None	6	U	6	23
01-DD-225	135.1	139.7	3 -10 m	2	None	6	Sl. Rough	3	None	6	U	6	23
01-DD-225	139.7	144.6	3 -10 m	2	None	6	Sl R/Sm	2	None	6	U	6	22
01-DD-225	144.6	149.6	3 -10 m	2	.1 -1 mm	4	Sl R/Sm	2	Hard, <5mm	4	U	6	18
01-DD-226	0	1											0
01-DD-226	1	1.7	3 -10 m	2	None	6	V. Rough	6	None	6	U	6	26
01-DD-226	1.7	4.3	3 -10 m	2	None	6	V. Rough	6	None	6	U	6	26
01-DD-226	4.3	7.7	3 -10 m	2	None	6	V. Rough	6	None	6	U	6	26
01-DD-226	7.7	12.5	3 -10 m	2	.1 -1 mm	4	Sl. Rough	3	None	6	U	6	21
01-DD-226	12.5	17.6	3 -10 m	2	.1 -1 mm	4	Sl R/Sm	2	None	6	U	6	20
01-DD-226	17.6	22.7	3 -10 m	2	None	6	Sl R/Sm	2	None	6	U	6	22
01-DD-226	22.7	27.8	3 -10 m	2	.1 -1 mm	4	Sl. Rough	3	None	6	U	6	21
01-DD-226	27.8	33	3 -10 m	2	None	6	Sl. Rough	3	None	6	U	6	23
01-DD-226	33	38.1	3 -10 m	2	None	6	V. Rough	6	None	6	U	6	26
01-DD-226	38.1	43	3 -10 m	2	None	6	V. Rough	6	None	6	U	6	26
01-DD-226	43	48.2	3 -10 m	2	.1 -1 mm	4	Sl. Rough	3	Hard, <5mm	4	U	6	19
01-DD-226	48.2	53	3 -10 m	2	.1 -1 mm	4	Sl. Rough	3	Hard, <5mm	4	U	6	19
01-DD-226	53	58	3 -10 m	2	.1 -1 mm	4	Sl. Rough	3	None	6	U	6	21
01-DD-226	58	63	3 -10 m	2	None	6	Sl. Rough	3	None	6	U	6	23
01-DD-226	63	68.2	3 -10 m	2	None	6	Sl R/R	4	None	6	U	6	24
01-DD-226	68.2	73	3 -10 m	2	.1 -1 mm	4	Sl R/Sm	2	None	6	U	6	20
01-DD-226	73	78	3 -10 m	2	None	6	Sl R/Sm	2	Hard, <5mm	4	U	6	20
01-DD-226	78	83	3 -10 m	2	.1 -1 mm	4	Sl R/Sm	2	Hard, <5mm	4	U	6	18
01-DD-226	83	88.2	3 -10 m	2	.1 -1 mm	4	Sl R/Sm	2	Hard, <5mm	4	U	6	18
01-DD-226	88.2	93	3 -10 m	2	.1 -1 mm	4	Sl. Rough	3	Hard, <5mm	4	U	6	19
01-DD-226	93	98	3 -10 m	2	None	6	V. Rough	6	None	6	U	6	26
01-DD-226	98	103	3 -10 m	2	None	6	V. Rough	6	None	6	U	6	26
01-DD-226	103	108.1	3 -10 m	2	None	6	V. Rough	6	None	6	U	6	26
01-DD-226	108.1	113	3 -10 m	2	.1 -1 mm	4	Sl R/Sm	2	Soft, <5mm	2	U	6	16
01-DD-226	113	118.2	3 -10 m	2	.1 -1 mm	4	V. Rough	6	None	6	U	6	24

TABLE A5 - Joint Condition Data

Boring ID	Depth, ft		Persistance		Separation		Roughness		Infilling		Weathering		Total Rating
	From	To	Length	Rating	Aperture	Rating	Description	Rating	Description	Rating	Class	Rating	
01-DD-226	118.2	123	3 -10 m	2	.1 -1 mm	4	V. Rough	6	None	6	U	6	24
01-DD-226	123	128	3 -10 m	2	.1 -1 mm	4	Sl. Rough	3	Soft, <5mm	2	U	6	17
01-DD-226	128	133	3 -10 m	2	.1 -1 mm	4	Sl R/Sm	2	Soft, <5mm	2	U	6	16
01-DD-226	133	138.2	3 -10 m	2	.1 -1 mm	4	Rough	5	Hard, <5mm	4	U	6	21
01-DD-226	138.2	143	3 -10 m	2	.1 -1 mm	4	Sl. Rough	3	None	6	U	6	21
01-DD-226	143	148	3 -10 m	2	None	6	V. Rough	6	None	6	U	6	26
01-DD-226	148	153	3 -10 m	2	None	6	V. Rough	6	None	6	U	6	26
01-DD-226	153	158.1	3 -10 m	2	None	6	Sl R/Sm	2	None	6	U	6	22
01-DD-226	158.1	163.2	3 -10 m	2	.1 -1 mm	4	Sl R/R	4	Soft, <5mm	2	U	6	18
01-DD-226	163.2	165	3 -10 m	2	None	6	V. Rough	6	None	6	U	6	26
01-DD-227	0	2.3											0
01-DD-227	2.3	4.6	3 -10 m	2	None	6	Slick.	0	None	6	U	6	20
01-DD-227	4.6	8.5	3 -10 m	2	.1 -1 mm	4	Smooth	1	Hard, <5mm	4	U	6	17
01-DD-227	8.5	11.1	3 -10 m	2	.1 -1 mm	4	Sl R/Sm	2	None	6	U	6	20
01-DD-227	11.1	14	3 -10 m	2	.1 -1 mm	4	Sl R/Sm	2	Hard, <5mm	4	U	6	18
01-DD-227	14	19	3 -10 m	2	.1 -1 mm	4	Slick.	0	Hard, <5mm	4	U	6	16
01-DD-227	19	22.9	3 -10 m	2	None	6	Slick.	0	None	6	U	6	20
01-DD-227	22.9	27.9	3 -10 m	2	None	6	Sl R/Sm	2	None	6	U	6	22
01-DD-227	27.9	33.1	3 -10 m	2	.1 -1 mm	4	Sl R/Sm	2	Soft, <5mm	2	U	6	16
01-DD-227	33.1	38.3	3 -10 m	2	None	6	Sl R/Sm	2	None	6	U	6	22
01-DD-227	38.3	43.3	3 -10 m	2	None	6	Sl R/Sm	2	None	6	U	6	22
01-DD-227	43.3	48.5	3 -10 m	2	.1 -1 mm	4	Slick.	0	Soft, <5mm	2	U	6	14
01-DD-227	48.5	53.7	3 -10 m	2	.1 -1 mm	4	Sl. Rough	3	Soft, <5mm	2	U	6	17
01-DD-227	53.7	58.9	3 -10 m	2	.1 -1 mm	4	Sl R/R	4	Hard, <5mm	4	U	6	20
01-DD-227	58.9	64	3 -10 m	2	.1 -1 mm	4	Sl. Rough	3	None	6	U	6	21
01-DD-227	64	69.1	3 -10 m	2	.1 -1 mm	4	Smooth	1	Hard, <5mm	4	U	6	17
01-DD-227	69.1	74.1	3 -10 m	2	.1 -1 mm	4	Sl R/Sm	2	Hard, <5mm	4	U	6	18
01-DD-227	74.1	79.3	3 -10 m	2	.1 -1 mm	4	Sl. Rough	3	Soft, <5mm	2	U	6	17
01-DD-227	79.3	84.4	3 -10 m	2	.1 -1 mm	4	Sl R/Sm	2	Soft, <5mm	2	U	6	16
01-DD-227	84.4	89.5	3 -10 m	2	.1 -1 mm	4	Sl. Rough	3	Hard, <5mm	4	U	6	19
01-DD-227	89.5	94.5	3 -10 m	2	.1 -1 mm	4	Sl R/Sm	2	Hard, <5mm	4	U	6	18

TABLE A5 - Joint Condition Data

Boring ID	Depth, ft		Persistance		Separation		Roughness		Infilling		Weathering		Total Rating
	From	To	Length	Rating	Aperture	Rating	Description	Rating	Description	Rating	Class	Rating	
01-DD-227	94.5	99.6	3 -10 m	2	.1 -1 mm	4	Sl. Rough	3	Hard, <5mm	4	U	6	19
01-DD-227	99.6	104.5	3 -10 m	2	.1 -1 mm	4	Smooth	1	Soft, <5mm	2	U	6	15
01-DD-227	104.5	109.6	3 -10 m	2	.1 -1 mm	4	V. Rough	6	None	6	U	6	24
01-DD-227	109.6	114.5	3 -10 m	2	.1 -1 mm	4	Sl R/Sm	2	None	6	U	6	20
01-DD-227	114.5	119.5	3 -10 m	2	.1 -1 mm	4	Smooth	1	Hard, <5mm	4	U	6	17
01-DD-227	119.5	122.5	3 -10 m	2	.1 -1 mm	4	Sl. Rough	3	Hard, <5mm	4	U	6	19
01-DD-227	122.5	127.7	3 -10 m	2	None	6	Smooth	1	None	6	U	6	21
01-DD-227	127.7	132.9	3 -10 m	2	None	6	Sl. Rough	3	None	6	U	6	23
01-DD-227	132.9	138.1	3 -10 m	2	.1 -1 mm	4	Sl R/Sm	2	Soft, <5mm	2	U	6	16
01-DD-227	138.1	143.3	3 -10 m	2	.1 -1 mm	4	Sl. Rough	3	Hard, <5mm	4	U	6	19
01-DD-227	143.3	148.3	3 -10 m	2	.1 -1 mm	4	Sl. Rough	3	Hard, <5mm	4	U	6	19
01-DD-227	148.3	150	3 -10 m	2	.1 -1 mm	4	Smooth	1	Soft, <5mm	2	U	6	15
01-DD-228	0	2.6	3 -10 m	2	.1 -1 mm	4	Sl R/Sm	2	None	6	MW	3	17
01-DD-228	2.6	2.8	3 -10 m	2	None	6	V. Rough	6	None	6	MW	3	23
01-DD-228	2.8	3.9	3 -10 m	2	.1 -1 mm	4	Rough	5	None	6	SW	5	22
01-DD-228	3.9	9	3 -10 m	2	.1 -1 mm	4	Sl R/Sm	2	None	6	U	6	20
01-DD-228	9	13.3	3 -10 m	2	.1 -1 mm	4	Sl R/Sm	2	Hard, <5mm	4	U	6	18
01-DD-228	13.3	18.4	3 -10 m	2	None	6	Sl R/Sm	2	None	6	U	6	22
01-DD-228	18.4	23.6	3 -10 m	2	None	6	Sl. Rough	3	None	6	U	6	23
01-DD-228	23.6	27.3	3 -10 m	2	.1 -1 mm	4	Sl. Rough	3	None	6	U	6	21
01-DD-228	27.3	32.3	3 -10 m	2	None	6	V. Rough	6	None	6	U	6	26
01-DD-228	32.3	37.4	3 -10 m	2	.1 -1 mm	4	Sl. Rough	3	None	6	U	6	21
01-DD-228	37.4	42.6	3 -10 m	2	.1 -1 mm	4	Sl. Rough	3	None	6	U	6	21
01-DD-228	42.6	47.7	3 -10 m	2	None	6	Sl. Rough	3	None	6	U	6	23
01-DD-228	47.7	52.7	3 -10 m	2	.1 -1 mm	4	Sl. Rough	3	Soft, <5mm	2	U	6	17
01-DD-228	52.7	57.7	3 -10 m	2	None	6	Sl. Rough	3	None	6	U	6	23
01-DD-228	57.7	62.9	3 -10 m	2	.1 -1 mm	4	Sl. Rough	3	Soft, <5mm	2	U	6	17
01-DD-228	62.9	68.1	3 -10 m	2	.1 -1 mm	4	Sl. Rough	3	Soft, <5mm	2	U	6	17
01-DD-228	68.1	73.2	3 -10 m	2	None	6	Sl R/Sm	2	None	6	U	6	22
01-DD-228	73.2	78.4	3 -10 m	2	None	6	V. Rough	6	None	6	U	6	26
01-DD-228	78.4	83.6	3 -10 m	2	None	6	Slick.	0	None	6	U	6	20

TABLE A5 - Joint Condition Data

Boring ID	Depth, ft		Persistance		Separation		Roughness		Infilling		Weathering		Total Rating
	From	To	Length	Rating	Aperture	Rating	Description	Rating	Description	Rating	Class	Rating	
01-DD-228	83.6	87.3	3 -10 m	2	None	6	Sl. Rough	3	None	6	U	6	23
01-DD-228	87.3	92.5	3 -10 m	2	None	6	Smooth	1	None	6	U	6	21
01-DD-228	92.5	94.9	3 -10 m	2	None	6	Sl R/Sm	2	Soft, <5mm	2	U	6	18
01-DD-228	94.9	98.7	3 -10 m	2	None	6	Smooth	1	None	6	U	6	21
01-DD-228	98.7	99.7	3 -10 m	2	None	6	V. Rough	6	Soft, <5mm	2	U	6	22
01-DD-228	99.7	104	3 -10 m	2	None	6	Rough	5	None	6	U	6	25
01-DD-228	104	106.6	3 -10 m	2	.1 -1 mm	4	Slick.	0	Soft, <5mm	2	U	6	14
01-DD-228	106.6	111.8	3 -10 m	2	None	6	Smooth	1	None	6	U	6	21
01-DD-228	111.8	113.7	3 -10 m	2	.1 -1 mm	4	Slick.	0	None	6	U	6	18
01-DD-228	113.7	118.7	3 -10 m	2	None	6	Sl R/Sm	2	None	6	U	6	22
01-DD-228	118.7	121.9	3 -10 m	2	None	6	Sl. Rough	3	None	6	U	6	23
01-DD-228	121.9	127	3 -10 m	2	None	6	Sl R/Sm	2	None	6	U	6	22
01-DD-228	127	131.8	3 -10 m	2	.1 -1 mm	4	Sl. Rough	3	Hard, <5mm	4	U	6	19
01-DD-228	131.8	136.3	3 -10 m	2	None	6	Sl. Rough	3	None	6	U	6	23
01-DD-228	136.3	141.5	3 -10 m	2	None	6	Sl. Rough	3	None	6	U	6	23
01-DD-228	141.5	146.7	3 -10 m	2	None	6	Sl. Rough	3	None	6	U	6	23
01-DD-228	146.7	151.9	3 -10 m	2	.1 -1 mm	4	Sl R/R	4	Soft, <5mm	2	U	6	18
01-DD-228	151.9	157	3 -10 m	2	None	6	Slick.	0	None	6	U	6	20
01-DD-228	157	162	3 -10 m	2	None	6	Sl R/Sm	2	None	6	U	6	22
01-DD-228	162	164.5	3 -10 m	2	.1 -1 mm	4	Sl R/Sm	2	None	6	U	6	20
01-DD-229	0	1.5											0
01-DD-229	1.5	2.5	3 -10 m	2	None	6	V. Rough	6	None	6	SW	5	25
01-DD-229	2.5	4.7	3 -10 m	2	None	6	V. Rough	6	None	6	SW	5	25
01-DD-229	4.7	5.3	3 -10 m	2	None	6	V. Rough	6	None	6	SW	5	25
01-DD-229	5.3	8.5	3 -10 m	2	None	6	Sl R/R	4	None	6	U	6	24
01-DD-229	8.5	11	3 -10 m	2	None	6	Sl R/Sm	2	None	6	U	6	22
01-DD-229	11	16.1	3 -10 m	2	None	6	Sl R/Sm	2	None	6	U	6	22
01-DD-229	16.1	21	3 -10 m	2	None	6	Sl R/R	4	None	6	U	6	24
01-DD-229	21	26	3 -10 m	2	None	6	Sl R/Sm	2	None	6	U	6	22
01-DD-229	26	31	3 -10 m	2	.1 -1 mm	4	Sl R/Sm	2	Hard, <5mm	4	U	6	18
01-DD-229	31	35	3 -10 m	2	.1 -1 mm	4	Sl R/Sm	2	Hard, <5mm	4	U	6	18

TABLE A5 - Joint Condition Data

Boring ID	Depth, ft		Persistance		Separation		Roughness		Infilling		Weathering		Total Rating
	From	To	Length	Rating	Aperture	Rating	Description	Rating	Description	Rating	Class	Rating	
01-DD-229	35	40	3 -10 m	2	None	6	Sl R/Sm	2	None	6	U	6	22
01-DD-229	40	45.1	3 -10 m	2	.1 -1 mm	4	Sl R/Sm	2	Soft, <5mm	2	U	6	16
01-DD-229	45.1	47.7	3 -10 m	2	None	6	Sl. Rough	3	None	6	U	6	23
01-DD-229	47.7	51	3 -10 m	2	None	6	Sl R/R	4	None	6	U	6	24
01-DD-229	51	55.3	3 -10 m	2	None	6	Sl. Rough	3	None	6	U	6	23
01-DD-230	0	4.1	3 -10 m	2	.1 -1 mm	4	Sl. Rough	3	Hard, <5mm	4	U	6	19
01-DD-230	4.1	8.3	3 -10 m	2	.1 -1 mm	4	Sl. Rough	3	None	6	U	6	21
01-DD-230	8.3	13.3	3 -10 m	2	.1 -1 mm	4	Sl R/Sm	2	Hard, <5mm	4	U	6	18
01-DD-230	13.3	17.6	3 -10 m	2	None	6	Sl. Rough	3	None	6	U	6	23
01-DD-230	17.6	21	3 -10 m	2	None	6	Sl. Rough	3	None	6	U	6	23
01-DD-230	21	26	3 -10 m	2	.1 -1 mm	4	Sl R/Sm	2	None	6	U	6	20
01-DD-230	26	27.3	3 -10 m	2	None	6	Sl R/Sm	2	None	6	U	6	22
01-DD-230	27.3	31	3 -10 m	2	None	6	Sl R/Sm	2	None	6	U	6	22
01-DD-230	31	36.1	3 -10 m	2	None	6	Sl R/Sm	2	None	6	U	6	22
01-DD-230	36.1	41	3 -10 m	2	.1 -1 mm	4	Sl R/R	4	Hard, <5mm	4	U	6	20
01-DD-230	41	46.2	3 -10 m	2	.1 -1 mm	4	Sl R/Sm	2	Hard, <5mm	4	U	6	18
01-DD-230	46.2	51	3 -10 m	2	.1 -1 mm	4	Sl R/R	4	Soft, <5mm	2	U	6	18
01-DD-230	51	56.2	3 -10 m	2	None	6	Sl R/Sm	2	None	6	U	6	22
01-DD-230	56.2	61	3 -10 m	2	None	6	Sl. Rough	3	None	6	U	6	23
01-DD-230	61	65.9	3 -10 m	2	None	6	Sl R/Sm	2	None	6	U	6	22
01-DD-230	65.9	71	3 -10 m	2	None	6	Sl R/Sm	2	None	6	U	6	22
01-DD-230	71	76.2	3 -10 m	2	None	6	Sl R/Sm	2	None	6	U	6	22
01-DD-230	76.2	81	3 -10 m	2	None	6	Sl R/Sm	2	None	6	U	6	22
01-DD-230	81	86	3 -10 m	2	.1 -1 mm	4	Sl R/Sm	2	Soft, <5mm	2	U	6	16
01-DD-230	86	89.9	3 -10 m	2	.1 -1 mm	4	Smooth	1	Soft, <5mm	2	U	6	15
01-DD-230	89.9	95	3 -10 m	2	.1 -1 mm	4	Sl R/Sm	2	Hard, <5mm	4	U	6	18
01-DD-230	95	97.1	3 -10 m	2	None	6	Smooth	1	None	6	U	6	21
01-DD-230	97.1	101	3 -10 m	2	.1 -1 mm	4	Smooth	1	Soft, <5mm	2	U	6	15
01-DD-230	101	104.8	3 -10 m	2	.1 -1 mm	4	Smooth	1	Soft, <5mm	2	U	6	15
01-DD-230	104.8	107	3 -10 m	2	None	6	Sl R/Sm	2	Soft, <5mm	2	U	6	18
01-DD-230	107	109.9	3 -10 m	2	.1 -1 mm	4	Smooth	1	Soft, <5mm	2	U	6	15

TABLE A5 - Joint Condition Data

Boring ID	Depth, ft		Persistance		Separation		Roughness		Infilling		Weathering		Total Rating
	From	To	Length	Rating	Aperture	Rating	Description	Rating	Description	Rating	Class	Rating	
04-DD-247	0.0	4.0	-	3	-	5	-	4	-	5	-	6	23
04-DD-247	4.0	9.0	-	3	-	5	-	4	-	2	-	6	20
04-DD-247	9.0	12.3	-	3	-	5	-	5	-	4	-	6	23
04-DD-247	12.3	14.0	-	3	-	5	-	5	-	4	-	6	23
04-DD-247	14.0	16.0	-	3	-	5	-	3	-	4	-	6	21
04-DD-247	16.0	19.0	-	3	-	5	-	5	-	4	-	6	23
04-DD-247	19.0	24.0	-	3	-	5	-	5	-	2	-	6	21
04-DD-247	24.0	29.0	-	3	-	5	-	6	-	4	-	6	24
04-DD-247	29.0	34.0	-	3	-	5	-	3	-	4	-	6	21
04-DD-247	34.0	38.0	-	3	-	5	-	3	-	4	-	6	21
04-DD-247	38.0	39.0	-	3	-	5	-	4	-	4	-	6	22
04-DD-247	39.0	43.3	-	3	-	5	-	5	-	2	-	6	21
04-DD-247	43.3	44.0	-	6	-	6	-	6	-	6	-	6	30
04-DD-247	44.0	49.0	-	3	-	5	-	3	-	4	-	6	21
04-DD-247	49.0	51.1	-	3	-	5	-	6	-	6	-	6	26
04-DD-247	51.1	54.0	-	3	-	5	-	6	-	2	-	6	22
04-DD-247	54.0	59.0	-	3	-	5	-	5	-	4	-	6	23
04-DD-247	59.0	64.0	-	3	-	5	-	5	-	4	-	6	23
04-DD-247	64.0	69.0	-	3	-	5	-	5	-	3	-	6	22
04-DD-247	69.0	74.0	-	3	-	5	-	5	-	4	-	6	23
04-DD-247	74.0	79.0	-	3	-	5	-	6	-	4	-	6	24
04-DD-247	79.0	84.0	-	3	-	5	-	5	-	4	-	6	23
04-DD-247	84.0	88.0	-	3	-	5	-	4	-	3	-	6	21
04-DD-247	88.0	89.0	-	6	-	6	-	6	-	6	-	6	30
04-DD-247	89.0	94.0	-	3	-	5	-	4	-	2	-	6	20
04-DD-247	94.0	99.0	-	3	-	5	-	5	-	2	-	6	21
04-DD-247	99.0	104.0	-	3	-	5	-	5	-	5	-	6	24
04-DD-248	0.7	5.5	-	3	-	5	-	5	-	4	-	6	23
04-DD-248	5.5	10.5	-	3	-	5	-	4	-	4	-	6	22
04-DD-248	10.5	15.5	-	3	-	5	-	3	-	4	-	6	21
04-DD-248	15.5	20.5	-	3	-	5	-	5	-	4	-	6	23

TABLE A5 - Joint Condition Data

Boring ID	Depth, ft		Persistance		Separation		Roughness		Infilling		Weathering		Total Rating
	From	To	Length	Rating	Aperture	Rating	Description	Rating	Description	Rating	Class	Rating	
04-DD-248	20.5	23.0	-	6	-	6	-	6	-	6	-	6	30
04-DD-248	23.0	25.5	-	6	-	6	-	6	-	6	-	6	30
04-DD-248	25.5	30.5	-	3	-	5	-	5	-	2	-	6	21
04-DD-248	30.5	35.5	-	3	-	5	-	5	-	4	-	6	23
04-DD-248	35.5	40.5	-	3	-	5	-	5	-	4	-	6	23
04-DD-248	40.5	45.5	-	3	-	5	-	5	-	2	-	6	21
04-DD-248	45.5	50.5	-	3	-	5	-	5	-	0	-	6	19
04-DD-248	50.5	55.5	-	3	-	5	-	5	-	4	-	6	23
04-DD-248	55.5	60.5	-	3	-	5	-	5	-	4	-	6	23
04-DD-248	60.5	65.5	-	3	-	5	-	5	-	4	-	6	23
04-DD-248	65.5	68.0	-	3	-	5	-	5	-	4	-	6	23
04-DD-248	68.0	70.5	-	3	-	5	-	5	-	6	-	6	25
04-DD-248	70.5	75.5	-	3	-	5	-	5	-	4	-	6	23
04-DD-248	75.5	80.5	-	3	-	5	-	5	-	6	-	6	25
04-DD-248	80.5	85.5	-	3	-	5	-	3	-	4	-	6	21
04-DD-248	85.5	90.5	-	3	-	5	-	1	-	4	-	6	19
04-DD-248	90.5	95.5	-	3	-	5	-	5	-	4	-	6	23
04-DD-248	95.5	100.5	-	3	-	5	-	5	-	4	-	6	23
04-DD-248	100.5	105.5	-	6	-	6	-	6	-	6	-	6	30
04-DD-248	105.5	110.5	-	3	-	5	-	5	-	2	-	6	21
04-DD-248	110.5	115.5	-	3	-	5	-	3	-	4	-	6	21
04-DD-248	115.5	120.5	-	6	-	6	-	6	-	6	-	6	30
04-DD-248	120.5	125.5	-	3	-	5	-	5	-	4	-	6	23
04-DD-248	125.5	130.5	-	3	-	5	-	5	-	4	-	6	23
04-DD-248	130.5	135.5	-	3	-	5	-	5	-	4	-	6	23
04-DD-248	135.5	140.5	-	3	-	5	-	5	-	6	-	6	25
04-DD-248	140.5	143.0	-	3	-	5	-	5	-	4	-	6	23
04-DD-249	0.7	5.5	-	3	-	5	-	5	-	2	-	6	21
04-DD-249	5.5	10.5	-	3	-	5	-	5	-	4	-	6	23
04-DD-249	10.5	15.5	-	3	-	5	-	5	-	4	-	6	23
04-DD-249	15.5	20.5	-	3	-	5	-	4	-	4	-	6	22

TABLE A5 - Joint Condition Data

Boring ID	Depth, ft		Persistance		Separation		Roughness		Infilling		Weathering		Total Rating
	From	To	Length	Rating	Aperture	Rating	Description	Rating	Description	Rating	Class	Rating	
04-DD-249	20.5	25.5	-	3	-	5	-	3	-	4	-	6	21
04-DD-249	25.5	30.5	-	3	-	5	-	5	-	6	-	6	25
04-DD-249	30.5	35.5	-	3	-	5	-	5	-	6	-	6	25
04-DD-249	35.5	40.5	-	3	-	5	-	5	-	4	-	6	23
04-DD-249	40.5	45.5	-	3	-	5	-	3	-	2	-	6	19
04-DD-249	45.5	50.5	-	3	-	5	-	3	-	3	-	6	20
04-DD-249	50.5	55.5	-	3	-	5	-	5	-	4	-	6	23
04-DD-249	55.5	60.5	-	3	-	5	-	5	-	6	-	6	25
04-DD-249	60.5	62.7	-	6	-	6	-	6	-	6	-	6	30
04-DD-249	62.7	65.5	-	6	-	6	-	6	-	6	-	6	30
04-DD-249	65.5	70.5	-	3	-	5	-	6	-	4	-	6	24
04-DD-249	70.5	75.5	-	3	-	5	-	5	-	3	-	6	22
04-DD-249	75.5	80.5	-	6	-	6	-	6	-	6	-	6	30
04-DD-249	80.5	85.5	-	6	-	6	-	6	-	6	-	6	30
04-DD-249	85.5	90.5	-	6	-	6	-	6	-	6	-	6	30
04-DD-249	90.5	95.5	-	6	-	6	-	6	-	6	-	6	30
04-DD-249	95.5	100.5	-	3	-	5	-	4	-	3	-	6	21
04-DD-249	100.5	105.5	-	3	-	5	-	5	-	3	-	6	22
04-DD-249	105.5	110.5	-	3	-	5	-	5	-	0	-	6	19
04-DD-249	110.5	115.5	-	3	-	5	-	4	-	2	-	6	20
04-DD-249	115.5	120.5	-	3	-	5	-	5	-	4	-	6	23
04-DD-249	120.5	125.5	-	3	-	5	-	5	-	4	-	6	23
04-DD-249	125.5	130.0	-	3	-	5	-	5	-	4	-	6	23
04-DD-249	130.0	135.0	-	3	-	5	-	5	-	4	-	6	23
04-DD-249	135.0	140.0	-	3	-	5	-	4	-	4	-	6	22
04-DD-249	140.0	142.5	-	3	-	5	-	2	-	4	-	6	20
04-DD-250	2.0	5.0	-	3	-	5	-	4	-	4	-	6	22
04-DD-250	5.0	10.0	-	3	-	5	-	4	-	5	-	6	23
04-DD-250	10.0	15.0	-	6	-	6	-	6	-	6	-	6	30
04-DD-250	15.0	20.0	-	3	-	5	-	5	-	6	-	6	25
04-DD-250	20.0	21.1	-	6	-	6	-	6	-	6	-	6	30

TABLE A5 - Joint Condition Data

Boring ID	Depth, ft		Persistance		Separation		Roughness		Infilling		Weathering		Total Rating
	From	To	Length	Rating	Aperture	Rating	Description	Rating	Description	Rating	Class	Rating	
04-DD-250	21.1	25.0	-	3	-	5	-	5	-	2	-	6	21
04-DD-250	25.0	30.0	-	3	-	5	-	5	-	4	-	6	23
04-DD-250	30.0	35.0	-	3	-	5	-	3	-	0	-	6	17
04-DD-250	35.0	40.0	-	3	-	5	-	3	-	4	-	6	21
04-DD-250	40.0	45.0	-	3	-	5	-	5	-	2	-	6	21
04-DD-250	45.0	50.0	-	3	-	5	-	5	-	0	-	6	19
04-DD-250	50.0	55.0	-	3	-	5	-	3	-	3	-	6	20
04-DD-250	55.0	60.0	-	3	-	5	-	4	-	2	-	6	20
04-DD-250	60.0	65.0	-	3	-	5	-	4	-	4	-	6	22
04-DD-250	65.0	70.0	-	3	-	5	-	4	-	4	-	6	22
04-DD-250	70.0	75.0	-	3	-	5	-	5	-	6	-	6	25
04-DD-250	75.0	80.0	-	3	-	5	-	5	-	4	-	6	23
04-DD-250	80.0	85.0	-	3	-	5	-	5	-	6	-	6	25
04-DD-250	85.0	90.0	-	3	-	5	-	5	-	4	-	6	23
04-DD-250	90.0	95.0	-	3	-	5	-	5	-	4	-	6	23
04-DD-250	95.0	100.0	-	6	-	6	-	6	-	6	-	6	30
04-DD-250	100.0	105.0	-	6	-	6	-	6	-	6	-	6	30
04-DD-250	105.0	110.0	-	3	-	5	-	6	-	2	-	6	22
04-DD-250	110.0	115.0	-	3	-	5	-	5	-	0	-	6	19
04-DD-250	115.0	120.0	-	3	-	5	-	5	-	4	-	6	23
04-DD-250	120.0	125.0	-	3	-	5	-	5	-	2	-	6	21
04-DD-250	125.0	130.0	-	3	-	5	-	5	-	4	-	6	23
04-DD-250	130.0	135.0	-	3	-	5	-	5	-	2	-	6	21
04-DD-250	135.0	140.0	-	3	-	5	-	6	-	4	-	6	24
04-DD-251	0.0	4.0	-	3	-	5	-	0	-	0	-	6	14
04-DD-251	4.0	7.8	-	3	-	5	-	3	-	0	-	6	17
04-DD-251	10.0	14.2	-	3	-	5	-	4	-	6	-	6	24
04-DD-251	14.2	19.2	-	3	-	5	-	5	-	4	-	6	23
04-DD-251	19.2	22.1	-	3	-	5	-	5	-	6	-	6	25
04-DD-251	22.1	24.2	-	6	-	6	-	6	-	6	-	6	30
04-DD-251	24.2	29.2	-	3	-	5	-	1	-	3	-	6	18

TABLE A5 - Joint Condition Data

Boring ID	Depth, ft		Persistance		Separation		Roughness		Infilling		Weathering		Total Rating
	From	To	Length	Rating	Aperture	Rating	Description	Rating	Description	Rating	Class	Rating	
04-DD-251	29.2	34.2	-	3	-	5	-	5	-	4	-	6	23
04-DD-251	34.2	39.2	-	3	-	5	-	4	-	6	-	6	24
04-DD-251	39.2	44.2	-	3	-	5	-	1	-	2	-	6	17
04-DD-251	44.2	49.2	-	3	-	5	-	3	-	4	-	6	21
04-DD-251	49.2	54.2	-	3	-	5	-	3	-	4	-	6	21
04-DD-251	54.2	59.2	-	3	-	5	-	1	-	4	-	6	19
04-DD-251	59.2	64.2	-	3	-	5	-	4	-	2	-	6	20
04-DD-251	64.2	69.2	-	3	-	5	-	4	-	4	-	6	22
04-DD-251	69.2	73.5	-	3	-	5	-	2	-	4	-	6	20
04-DD-251	73.5	74.2	-	3	-	5	-	6	-	4	-	6	24
04-DD-251	74.2	79.2	-	3	-	5	-	5	-	4	-	6	23
04-DD-251	79.2	84.2	-	3	-	5	-	3	-	2	-	6	19
04-DD-251	84.2	89.2	-	3	-	5	-	5	-	4	-	6	23
04-DD-251	89.2	94.2	-	3	-	5	-	2	-	2	-	6	18
04-DD-251	94.2	99.2	-	3	-	5	-	3	-	5	-	6	22
04-DD-251	99.2	104.2	-	3	-	5	-	3	-	4	-	6	21
04-DD-251	104.2	109.2	-	3	-	5	-	4	-	2	-	6	20
04-DD-251	109.2	114.2	-	3	-	5	-	5	-	4	-	6	23
04-DD-251	114.2	119.2	-	3	-	5	-	3	-	4	-	6	21
04-DD-251	119.2	124.2	-	3	-	5	-	5	-	4	-	6	23
04-DD-251	124.2	129.2	-	3	-	5	-	4	-	4	-	6	22
04-DD-251	129.2	134.2	-	3	-	5	-	5	-	5	-	6	24
04-DD-251	134.2	139.2	-	3	-	5	-	2	-	2	-	6	18
04-DD-251	139.2	144.2	-	3	-	5	-	5	-	6	-	6	25
04-DD-252	0.0	4.3	-	3	-	5	-	5	-	6	-	6	25
04-DD-252	4.3	9.3	-	3	-	5	-	4	-	4	-	6	22
04-DD-252	9.3	14.3	-	3	-	5	-	6	-	6	-	6	26
04-DD-252	14.3	19.3	-	3	-	5	-	5	-	6	-	6	25
04-DD-252	19.3	24.3	-	3	-	5	-	5	-	6	-	6	25
04-DD-252	24.3	29.3	-	3	-	5	-	4	-	6	-	6	24
04-DD-252	29.3	34.3	-	3	-	5	-	4	-	6	-	6	24

TABLE A5 - Joint Condition Data

Boring ID	Depth, ft		Persistance		Separation		Roughness		Infilling		Weathering		Total Rating
	From	To	Length	Rating	Aperture	Rating	Description	Rating	Description	Rating	Class	Rating	
04-DD-252	34.3	39.3	-	3	-	5	-	5	-	2	-	6	21
04-DD-252	39.3	44.3	-	3	-	5	-	4	-	6	-	6	24
04-DD-252	44.3	49.3	-	3	-	5	-	4	-	4	-	6	22
04-DD-252	49.3	52.1	-	3	-	5	-	5	-	6	-	6	25
04-DD-252	52.1	54.3	-	3	-	5	-	2	-	4	-	6	20
04-DD-252	54.3	59.3	-	3	-	5	-	5	-	6	-	6	25
04-DD-252	59.3	64.3	-	3	-	5	-	2	-	4	-	6	20
04-DD-252	64.3	69.0	-	3	-	5	-	2	-	4	-	6	20
04-DD-252	69.0	71.8	-	3	-	5	-	3	-	4	-	6	21
04-DD-252	71.8	74.3	-	3	-	5	-	5	-	4	-	6	23
04-DD-252	74.3	78.9	-	3	-	5	-	5	-	2	-	6	21
04-DD-252	78.9	83.2	-	3	-	5	-	5	-	4	-	6	23
04-DD-252	83.2	84.2	-	3	-	5	-	5	-	5	-	6	24
04-DD-252	84.2	89.2	-	3	-	5	-	5	-	4	-	6	23
04-DD-252	89.2	94.2	-	3	-	5	-	5	-	2	-	6	21
04-DD-252	94.2	99.2	-	3	-	5	-	6	-	6	-	6	26
04-DD-252	99.2	104.2	-	3	-	5	-	5	-	4	-	6	23
04-DD-252	104.2	109.2	-	3	-	5	-	3	-	4	-	6	21
04-DD-253	1.1	3.4	-	3	-	0	-	5	-	2	-	6	16
04-DD-253	3.4	5.5	-	3	-	0	-	5	-	2	-	6	16
04-DD-253	5.5	10.5	-	3	-	5	-	5	-	4	-	6	23
04-DD-253	10.5	15.5	-	6	-	6	-	6	-	6	-	6	30
04-DD-253	15.5	20.5	-	3	-	0	-	5	-	2	-	6	16
04-DD-253	20.5	25.5	-	3	-	5	-	5	-	5	-	6	24
04-DD-253	25.5	30.5	-	3	-	4	-	3	-	5	-	6	21
04-DD-253	30.5	35.5	-	3	-	5	-	5	-	4	-	6	23
04-DD-253	35.5	40.5	-	3	-	5	-	5	-	4	-	6	23
04-DD-253	40.5	45.5	-	3	-	5	-	5	-	4	-	6	23
04-DD-253	45.5	50.5	-	3	-	5	-	1	-	4	-	6	19
04-DD-253	50.5	55.5	-	3	-	5	-	5	-	4	-	6	23
04-DD-253	55.5	60.5	-	3	-	5	-	5	-	4	-	6	23

TABLE A5 - Joint Condition Data

Boring ID	Depth, ft		Persistance		Separation		Roughness		Infilling		Weathering		Total Rating
	From	To	Length	Rating	Aperture	Rating	Description	Rating	Description	Rating	Class	Rating	
04-DD-253	60.5	65.5	-	3	-	5	-	3	-	4	-	6	21
04-DD-253	65.5	70.5	-	3	-	5	-	5	-	4	-	6	23
04-DD-253	70.5	75.5	-	3	-	5	-	5	-	4	-	6	23
04-DD-253	75.5	80.5	-	3	-	5	-	3	-	4	-	6	21
04-DD-253	80.5	85.5	-	3	-	5	-	5	-	2	-	6	21
04-DD-253	85.5	90.5	-	6	-	6	-	6	-	6	-	6	30
04-DD-253	90.5	95.5	-	6	-	6	-	6	-	6	-	6	30
04-DD-253	95.5	100.5	-	3	-	5	-	5	-	6	-	6	25
04-DD-253	100.5	105.5	-	3	-	5	-	5	-	6	-	6	25
04-DD-253	105.5	110.5	-	6	-	6	-	6	-	6	-	6	30
04-DD-253	110.5	115.5	-	3	-	5	-	5	-	4	-	6	23
04-DD-253	115.5	120.5	-	3	-	5	-	5	-	4	-	6	23
04-DD-253	120.5	125.5	-	6	-	6	-	6	-	6	-	6	30
04-DD-253	125.5	130.5	-	3	-	5	-	5	-	5	-	6	24
04-DD-253	130.5	135.5	-	3	-	5	-	5	-	6	-	6	25
04-DD-253	135.5	140.5	-	3	-	5	-	5	-	4	-	6	23
04-DD-253	140.5	145.5	-	3	-	5	-	5	-	4	-	6	23
04-DD-253	145.5	150.5	-	3	-	5	-	5	-	4	-	6	23
04-DD-253	150.5	153.0	-	3	-	5	-	5	-	4	-	6	23
04-DD-254	0.0	5.0	-	3	-	5	-	5	-	4	-	6	23
04-DD-254	5.0	10.0	-	3	-	5	-	3	-	4	-	6	21
04-DD-254	10.0	15.0	-	3	-	5	-	3	-	4	-	6	21
04-DD-254	15.0	20.0	-	3	-	5	-	5	-	4	-	6	23
04-DD-254	20.0	25.0	-	3	-	5	-	3	-	4	-	6	21
04-DD-254	25.0	30.0	-	3	-	5	-	3	-	4	-	6	21
04-DD-254	30.0	35.0	-	3	-	5	-	3	-	4	-	6	21
04-DD-254	35.0	40.0	-	3	-	5	-	3	-	4	-	6	21
04-DD-254	40.0	45.0	-	3	-	5	-	3	-	4	-	6	21
04-DD-254	45.0	50.0	-	6	-	6	-	6	-	6	-	6	30
04-DD-254	50.0	55.0	-	3	-	5	-	5	-	5	-	6	24
04-DD-254	55.0	59.8	-	3	-	5	-	5	-	4	-	6	23

TABLE A5 - Joint Condition Data

Boring ID	Depth, ft		Persistance		Separation		Roughness		Infilling		Weathering		Total Rating
	From	To	Length	Rating	Aperture	Rating	Description	Rating	Description	Rating	Class	Rating	
04-DD-254	59.8	65.0	-	3	-	5	-	3	-	4	-	6	21
04-DD-254	65.0	70.0	-	3	-	5	-	3	-	4	-	6	21
04-DD-254	70.0	75.0	-	3	-	5	-	5	-	4	-	6	23
04-DD-254	75.0	80.0	-	3	-	5	-	3	-	4	-	6	21
04-DD-254	80.0	85.0	-	3	-	5	-	3	-	4	-	6	21
04-DD-254	85.0	90.0	-	3	-	5	-	5	-	4	-	6	23
04-DD-254	90.0	95.0	-	6	-	6	-	6	-	6	-	6	30
04-DD-254	95.0	100.0	-	3	-	5	-	5	-	4	-	6	23
04-DD-254	100.0	105.0	-	3	-	5	-	5	-	5	-	6	24
04-DD-254	105.0	110.0	-	3	-	5	-	3	-	5	-	6	22
04-DD-254	110.0	115.0	-	3	-	5	-	3	-	2	-	6	19
04-DD-254	115.0	120.0	-	3	-	5	-	4	-	4	-	6	22
04-DD-254	120.0	125.0	-	3	-	5	-	6	-	4	-	6	24
04-DD-254	125.0	130.0	-	3	-	5	-	3	-	4	-	6	21
04-DD-254	130.0	135.0	-	3	-	5	-	5	-	4	-	6	23
04-DD-254	135.0	140.0	-	3	-	5	-	5	-	2	-	6	21
04-DD-254	140.0	141.6	-	6	-	6	-	6	-	6	-	6	30
04-DD-254	141.6	145.0	-	3	-	5	-	5	-	4	-	6	23
04-DD-254	145.0	150.0	-	3	-	5	-	4	-	4	-	6	22
04-DD-254	150.0	153.0	-	3	-	5	-	5	-	4	-	6	23
04-DD-255	0.0	4.3	-	3	-	5	-	6	-	6	-	6	26
04-DD-255	4.3	9.3	-	3	-	5	-	5	-	2	-	6	21
04-DD-255	9.3	14.3	-	3	-	5	-	4	-	4	-	6	22
04-DD-255	14.3	19.3	-	3	-	5	-	5	-	4	-	6	23
04-DD-255	19.3	24.3	-	3	-	5	-	5	-	4	-	6	23
04-DD-255	24.3	29.3	-	3	-	5	-	6	-	6	-	6	26
04-DD-255	29.3	34.3	-	3	-	5	-	5	-	4	-	6	23
04-DD-255	34.3	39.3	-	6	-	6	-	6	-	6	-	6	30
04-DD-255	39.3	44.3	-	3	-	5	-	3	-	2	-	6	19
04-DD-255	44.3	49.3	-	3	-	5	-	3	-	4	-	6	21
04-DD-255	49.3	52.6	-	3	-	5	-	5	-	4	-	6	23

TABLE A5 - Joint Condition Data

Boring ID	Depth, ft		Persistance		Separation		Roughness		Infilling		Weathering		Total Rating
	From	To	Length	Rating	Aperture	Rating	Description	Rating	Description	Rating	Class	Rating	
04-DD-255	52.6	54.3	-	3	-	5	-	6	-	4	-	6	24
04-DD-255	54.3	57.9	-	3	-	5	-	3	-	4	-	6	21
04-DD-255	57.9	59.3	-	3	-	5	-	3	-	5	-	6	22
04-DD-255	59.3	64.3	-	3	-	5	-	5	-	5	-	6	24
04-DD-255	64.3	69.3	-	3	-	5	-	5	-	5	-	6	24
04-DD-255	69.3	74.3	-	3	-	5	-	4	-	4	-	6	22
04-DD-255	74.3	77.8	-	3	-	5	-	5	-	4	-	6	23
04-DD-255	77.8	79.3	-	3	-	5	-	5	-	4	-	6	23
04-DD-255	79.3	84.3	-	3	-	5	-	5	-	4	-	6	23
04-DD-255	84.3	89.3	-	3	-	5	-	5	-	6	-	6	25
04-DD-255	89.3	94.3	-	3	-	5	-	5	-	6	-	6	25
04-DD-255	94.3	99.3	-	3	-	5	-	5	-	4	-	6	23
04-DD-255	99.3	104.3	-	3	-	5	-	3	-	4	-	6	21
04-DD-255	104.3	109.3	-	6	-	6	-	6	-	6	-	6	30
04-DD-255	109.3	114.3	-	3	-	5	-	4	-	4	-	6	22
04-DD-255	114.3	115.8	-	3	-	5	-	3	-	4	-	6	21

Legend

Boring ID: Year - (i.e. 01 for 2001)
Drilling Method - (i.e. DD for diamond drilling)
Borehole Number - (i.e. 230)

Roughness: R - Rough
SM - Smooth
Sl - Slightly
V - Very

Weathering: U - Unweathered
SW - Slightly Weathered
MW - Moderately Weathered

Measures: m - meters
mm - millimeters

TABLE A6 - Rock Mass Ratings

Boring ID	Depth (ft)		RQD (%)	Q* Value	Rock Mass Rating (RMR)		
	From	To			Rating	Class Number	Description
01-DD-222	0.0	1.9					
01-DD-222	1.9	4.6	57	42.75	58.4	III	fair
01-DD-222	4.6	5.7	54	40.50	63.5	II	good
01-DD-222	5.7	7.8	81	81.00	66.8	II	good
01-DD-222	7.8	12.0	93	69.75	71.6	II	good
01-DD-222	12.0	17.0	71	23.67	66.3	II	good
01-DD-222	17.0	21.1	73	9.13	60.9	III	fair
01-DD-222	21.1	26.3	50	4.17	57.2	III	fair
01-DD-222	26.3	31.4	100	50.00	71.1	II	good
01-DD-222	31.4	36.5	86	35.83	62.8	II	good
01-DD-222	36.5	41.6	84	7.00	65.3	II	good
01-DD-222	41.6	46.7	85	17.71	70.1	II	good
01-DD-222	46.7	51.8	85	21.25	68.0	II	good
01-DD-222	51.8	56.9	86	17.92	66.8	II	good
01-DD-222	56.9	62.0	75	9.38	64.8	II	good
01-DD-222	62.0	67.1	94	94.00	70.5	II	good
01-DD-222	67.1	72.0	100	41.67	73.0	II	good
01-DD-222	72.0	77.2	79	39.50	64.3	II	good
01-DD-222	77.2	82.0	100	75.00	75.2	II	good
01-DD-222	82.0	85.8	92	138.00	69.7	II	good
01-DD-222	85.8	91.0	75	12.50	59.7	III	fair
01-DD-222	91.0	95.1	49	16.33	59.9	III	fair
01-DD-222	95.1	100.3	58	3.63	62.0	II	good
01-DD-222	100.3	105.4	33	4.40	58.5	III	fair
01-DD-222	105.4	106.9	0	1.00	54.1	III	fair
01-DD-222	106.9	109.5	35	7.29	58.3	III	fair
01-DD-222	109.5	110.3	0	0.83	46.8	III	fair
01-DD-222	110.3	115.5	62	3.88	63.5	II	good
01-DD-222	115.5	117.7	82	41.00	66.8	II	good
01-DD-222	117.7	122.0	76	31.67	66.6	II	good
01-DD-222	122.0	125.4	94	15.67	69.1	II	good
01-DD-223	0.0	2.1					
01-DD-223	2.1	6.5	95	7.92	69.9	II	good
01-DD-223	6.5	10.6	99	115.50	70.9	II	good
01-DD-223	10.6	13.5	76	76.00	64.4	II	good
01-DD-223	13.5	18.6	81	13.50	65.8	II	good
01-DD-223	18.6	23.5	100	75.00	71.8	II	good
01-DD-223	23.5	28.5	94	31.33	64.6	II	good
01-DD-223	28.5	33.5	96	16.00	70.1	II	good
01-DD-223	33.5	38.7	83	34.58	67.6	II	good
01-DD-223	38.7	43.5	98	98.00	73.4	II	good
01-DD-223	43.5	48.7	96	56.00	68.3	II	good
01-DD-223	48.7	53.5	88	22.00	65.5	II	good
01-DD-223	53.5	58.7	100	75.00	69.3	II	good
01-DD-223	58.7	63.5	100	133.33	79.2	II	good

TABLE A6 - Rock Mass Ratings

Boring ID	Depth (ft)		RQD (%)	Q* Value	Rock Mass Rating (RMR)		
	From	To			Rating	Class Number	Description
01-DD-223	63.5	68.6	100	75.00	69.7	II	good
01-DD-223	68.6	73.2	89	178.00	80.3	II	good
01-DD-223	73.2	78.4	96	144.00	76.9	II	good
01-DD-223	78.4	83.5	84	21.00	64.2	II	good
01-DD-223	83.5	88.6	73	4.06	58.4	III	fair
01-DD-223	88.6	93.5	85	28.33	68.4	II	good
01-DD-223	93.5	98.6	96	72.00	75.7	II	good
01-DD-223	98.6	103.5	100	533.33	81.4	I	v. good
01-DD-223	103.5	108.6	96	144.00	78.7	II	good
01-DD-223	108.6	113.3	100	33.33	67.8	II	good
01-DD-223	113.3	118.3	88	44.00	64.2	II	good
01-DD-223	118.3	123.5	100	100.00	77.8	II	good
01-DD-223	123.5	128.7	72	12.00	63.8	II	good
01-DD-223	128.7	131.4	78	26.00	59.5	III	fair
01-DD-224	1.1	1.5					
01-DD-224	1.5	4.3	96	112.00	71.3	II	good
01-DD-224	4.3	9.0	94	94.00	70.2	II	good
01-DD-224	9.0	12.5	57	11.88	56.7	III	fair
01-DD-224	12.5	17.5	56	9.33	55.6	III	fair
01-DD-224	17.5	22.5	70	7.29	63.3	II	good
01-DD-224	22.5	27.5	72	4.50	59.7	III	fair
01-DD-224	27.5	32.5	88	11.00	64.4	II	good
01-DD-224	32.5	37.5	74	12.33	63.1	II	good
01-DD-224	37.5	42.5	98	65.33	72.9	II	good
01-DD-224	42.5	47.5	96	32.00	71.6	II	good
01-DD-224	47.5	52.7	60	6.67	61.4	II	good
01-DD-224	52.7	57.7	85	70.83	64.5	II	good
01-DD-224	57.7	62.5	94	62.67	70.5	II	good
01-DD-224	62.5	67.4	88	36.67	64.7	II	good
01-DD-224	67.4	72.5	98	49.00	69.6	II	good
01-DD-224	72.5	77.7	88	16.50	68.9	II	good
01-DD-224	77.7	82.5	100	66.67	70.3	II	good
01-DD-224	82.5	87.7	94	141.00	71.5	II	good
01-DD-224	87.7	92.5	100	75.00	74.5	II	good
01-DD-224	92.5	97.7	88	29.33	69.9	II	good
01-DD-224	97.7	102.5	100	66.67	72.9	II	good
01-DD-224	102.5	107.6	88	11.00	65.7	II	good
01-DD-224	107.6	112.5	63	10.50	58.8	III	fair
01-DD-224	112.5	115.4	76	7.92	61.0	III	fair
01-DD-224	115.4	120.6	73	9.13	63.7	II	good
01-DD-224	120.6	124.4	63	7.88	63.2	II	good
01-DD-224	124.4	129.6	85	21.25	67.3	II	good
01-DD-224	129.6	134.6	52	10.83	62.1	II	good
01-DD-224	134.6	139.8	98	40.83	72.5	II	good
01-DD-224	139.8	145.0	90	45.00	67.8	II	good

TABLE A6 - Rock Mass Ratings

Boring ID	Depth (ft)		RQD (%)	Q* Value	Rock Mass Rating (RMR)		
	From	To			Rating	Class Number	Description
01-DD-224	145.0	150.2	94	58.75	70.7	II	good
01-DD-225	0.0	1.3					
01-DD-225	1.3	3.3	80	33.33	64.6	II	good
01-DD-225	3.3	5.4	0	4.17	48.6	III	fair
01-DD-225	5.4	8.1	41	13.67	53.3	III	fair
01-DD-225	8.1	10.4	83	6.92	59.8	III	fair
01-DD-225	10.4	15.0	78	6.50	64.0	II	good
01-DD-225	15.0	20.2	96	6.00	68.2	II	good
01-DD-225	20.2	25.3	61	15.25	61.0	III	fair
01-DD-225	25.3	28.5	75	31.25	60.6	III	fair
01-DD-225	28.5	33.5	98	163.33	67.6	II	good
01-DD-225	33.5	38.4	100	50.00	68.0	II	good
01-DD-225	38.4	41.0	100	133.33	73.3	II	good
01-DD-225	41.0	46.2	87	21.75	65.1	II	good
01-DD-225	46.2	47.8	31	7.75	56.2	III	fair
01-DD-225	47.8	50.5	41	1.37	55.8	III	fair
01-DD-225	50.5	55.4	69	23.00	64.0	II	good
01-DD-225	55.4	60.4	100	100.00	75.5	II	good
01-DD-225	60.4	65.5	90	22.50	62.7	II	good
01-DD-225	65.5	70.5	82	41.00	61.8	II	good
01-DD-225	70.5	75.7	79	5.49	64.4	II	good
01-DD-225	75.7	79.6	51	12.75	61.0	III	fair
01-DD-225	79.6	81.9	26	3.25	56.4	III	fair
01-DD-225	81.9	85.6	32	0.33	56.2	III	fair
01-DD-225	85.6	90.8	83	5.76	62.0	II	good
01-DD-225	90.8	92.2	64	1.33	59.4	III	fair
01-DD-225	92.2	94.7	44	29.33	58.2	III	fair
01-DD-225	94.7	95.7	0	2.67	51.2	III	fair
01-DD-225	95.7	98.7	13	3.25	58.1	III	fair
01-DD-225	98.7	100.1	36	9.00	50.4	III	fair
01-DD-225	100.1	104.6	36	1.50	67.4	II	good
01-DD-225	104.6	106.1	33	1.38	64.8	II	good
01-DD-225	106.1	108.0	32	5.33	55.8	III	fair
01-DD-225	108.0	110.6	15	1.25	55.5	III	fair
01-DD-225	110.6	115.7	67	16.75	63.3	II	good
01-DD-225	115.7	120.7	32	0.67	56.0	III	fair
01-DD-225	120.7	123.4	52	11.56	59.8	III	fair
01-DD-225	123.4	127.3	62	7.75	62.0	II	good
01-DD-225	127.3	130.4	48	6.00	60.4	III	fair
01-DD-225	130.4	135.1	62	31.00	63.8	II	good
01-DD-225	135.1	139.7	70	70.00	68.5	II	good
01-DD-225	139.7	144.6	100	6.25	72.5	II	good
01-DD-225	144.6	149.6	100	83.33	68.6	II	good
01-DD-226	0.0	1.0					
01-DD-226	1.0	1.7	100	533.33	70.5	II	good

TABLE A6 - Rock Mass Ratings

Boring ID	Depth (ft)		RQD (%)	Q* Value	Rock Mass Rating (RMR)		
	From	To			Rating	Class Number	Description
01-DD-226	1.7	4.3	0	53.33	61.7	II	good
01-DD-226	4.3	7.7	100	533.33	80.9	II	good
01-DD-226	7.7	12.5	98	32.67	73.4	II	good
01-DD-226	12.5	17.6	86	19.11	66.6	II	good
01-DD-226	17.6	22.7	63	10.50	61.9	II	good
01-DD-226	22.7	27.8	98	522.67	78.2	II	good
01-DD-226	27.8	33.0	100	150.00	80.8	II	good
01-DD-226	33.0	38.1	100	533.33	83.7	I	v. good
01-DD-226	38.1	43.0	100	533.33	82.3	I	v. good
01-DD-226	43.0	48.2	92	20.44	66.1	II	good
01-DD-226	48.2	53.0	98	49.00	70.4	II	good
01-DD-226	53.0	58.0	100	150.00	77.5	II	good
01-DD-226	58.0	63.0	94	47.00	71.6	II	good
01-DD-226	63.0	68.2	98	147.00	80.3	II	good
01-DD-226	68.2	73.0	100	33.33	72.9	II	good
01-DD-226	73.0	78.0	100	16.67	68.5	II	good
01-DD-226	78.0	83.0	88	0.35	65.0	II	good
01-DD-226	83.0	88.2	83	27.67	62.6	II	good
01-DD-226	88.2	93.0	90	18.00	66.3	II	good
01-DD-226	93.0	98.0	100	533.33	83.5	I	v. good
01-DD-226	98.0	103.0	100	533.33	83.5	I	v. good
01-DD-226	103.0	108.1	100	533.33	83.7	I	v. good
01-DD-226	108.1	113.0	90	10.00	63.4	II	good
01-DD-226	113.0	118.2	100	533.33	81.8	I	v. good
01-DD-226	118.2	123.0	96	512.00	80.2	II	good
01-DD-226	123.0	128.0	100	75.00	74.5	II	good
01-DD-226	128.0	133.0	98	49.00	68.6	II	good
01-DD-226	133.0	138.2	100	150.00	78.8	II	good
01-DD-226	138.2	143.0	100	150.00	78.2	II	good
01-DD-226	143.0	148.0	100	533.33	83.5	I	v. good
01-DD-226	148.0	153.0	98	522.67	83.0	I	v. good
01-DD-226	153.0	158.1	100	25.00	73.2	II	good
01-DD-226	158.1	163.2	100	37.50	75.7	II	good
01-DD-226	163.2	165.0	100	533.33	77.4	II	good
01-DD-227	0.0	2.3					
01-DD-227	2.3	4.6	65	32.50	63.9	II	good
01-DD-227	4.6	8.5	100	75.00	71.8	II	good
01-DD-227	8.5	11.1	27	6.75	52.3	III	fair
01-DD-227	11.1	14.0	97	72.75	71.2	II	good
01-DD-227	14.0	19.0	100	75.00	69.1	II	good
01-DD-227	19.0	22.9	100	150.00	75.8	II	good
01-DD-227	22.9	27.9	96	48.00	72.1	II	good
01-DD-227	27.9	33.1	92	17.25	67.4	II	good
01-DD-227	33.1	38.3	62	4.59	61.8	II	good
01-DD-227	38.3	43.3	98	5.44	71.4	II	good

TABLE A6 - Rock Mass Ratings

Boring ID	Depth (ft)		RQD (%)	Q* Value	Rock Mass Rating (RMR)		
	From	To			Rating	Class Number	Description
01-DD-227	43.3	48.5	98	36.75	65.8	II	good
01-DD-227	48.5	53.7	98	147.00	73.3	II	good
01-DD-227	53.7	58.9	87	10.88	64.5	II	good
01-DD-227	58.9	64.0	73	7.30	62.4	II	good
01-DD-227	64.0	69.1	94	15.67	73.2	II	good
01-DD-227	69.1	74.1	100	75.00	71.1	II	good
01-DD-227	74.1	79.3	100	37.50	74.8	II	good
01-DD-227	79.3	84.4	100	25.00	69.2	II	good
01-DD-227	84.4	89.5	100	75.00	68.9	II	good
01-DD-227	89.5	94.5	98	147.00	75.0	II	good
01-DD-227	94.5	99.6	100	150.00	76.7	II	good
01-DD-227	99.6	104.5	92	34.50	70.4	II	good
01-DD-227	104.5	109.6	100	533.33	81.7	I	v. good
01-DD-227	109.6	114.5	84	9.33	66.0	II	good
01-DD-227	114.5	119.5	100	100.00	74.5	II	good
01-DD-227	119.5	122.5	100	75.00	73.2	II	good
01-DD-227	122.5	127.7	100	75.00	72.3	II	good
01-DD-227	127.7	132.9	96	16.00	73.3	II	good
01-DD-227	132.9	138.1	90	11.25	63.6	II	good
01-DD-227	138.1	143.3	100	400.00	72.3	II	good
01-DD-227	143.3	148.3	98	147.00	76.0	II	good
01-DD-227	148.3	150.0	100	25.00	63.5	II	good
01-DD-228	0.0	2.6	0	5.00	47.9	III	fair
01-DD-228	2.6	2.8	0	1.50	53.0	III	fair
01-DD-228	2.8	3.9	36	5.40	60.1	III	fair
01-DD-228	3.9	9.0	96	24.00	67.5	II	good
01-DD-228	9.0	13.3	88	11.00	67.1	II	good
01-DD-228	13.3	18.4	71	35.50	63.2	II	good
01-DD-228	18.4	23.6	94	141.00	76.5	II	good
01-DD-228	23.6	27.3	22	4.40	52.9	III	fair
01-DD-228	27.3	32.3	74	16.44	77.6	II	good
01-DD-228	32.3	37.4	49	16.33	57.5	III	fair
01-DD-228	37.4	42.6	77	25.67	63.0	II	good
01-DD-228	42.6	47.7	61	7.63	63.5	II	good
01-DD-228	47.7	52.7	74	24.67	59.1	III	fair
01-DD-228	52.7	57.7	98	16.33	69.9	II	good
01-DD-228	57.7	62.9	100	33.33	66.2	II	good
01-DD-228	62.9	68.1	83	27.67	60.5	III	fair
01-DD-228	68.1	73.2	94	94.00	69.6	II	good
01-DD-228	73.2	78.4	100	150.00	83.8	I	v. good
01-DD-228	78.4	83.6	100	16.67	73.3	II	good
01-DD-228	83.6	87.3	89	59.33	70.7	II	good
01-DD-228	87.3	92.5	87	9.67	67.0	II	good
01-DD-228	92.5	94.9	42	1.75	54.3	III	fair
01-DD-228	94.9	98.7	63	1.31	60.0	III	fair

TABLE A6 - Rock Mass Ratings

Boring ID	Depth (ft)		RQD (%)	Q* Value	Rock Mass Rating (RMR)		
	From	To			Rating	Class Number	Description
01-DD-228	98.7	99.7	0	0.42	55.0	III	fair
01-DD-228	99.7	104.0	88	22.00	72.3	II	good
01-DD-228	104.0	106.6	62	1.29	54.5	III	fair
01-DD-228	106.6	111.8	71	1.18	64.6	II	good
01-DD-228	111.8	113.7	53	3.31	57.3	III	fair
01-DD-228	113.7	118.7	86	7.17	68.5	II	good
01-DD-228	118.7	121.9	88	22.00	68.5	II	good
01-DD-228	121.9	127.0	69	3.45	61.7	II	good
01-DD-228	127.0	131.8	98	13.07	66.9	II	good
01-DD-228	131.8	136.3	82	10.93	68.5	II	good
01-DD-228	136.3	141.5	88	7.33	69.9	II	good
01-DD-228	141.5	146.7	100	33.33	74.3	II	good
01-DD-228	146.7	151.9	98	16.33	70.9	II	good
01-DD-228	151.9	157.0	100	200.00	79.2	II	good
01-DD-228	157.0	162.0	100	100.00	81.1	I	v. good
01-DD-228	162.0	164.5	88	19.56	71.8	II	good
01-DD-229	0.0	1.5					
01-DD-229	1.5	2.5	90	67.50	70.6	II	good
01-DD-229	2.5	4.7	32	24.00	62.9	II	good
01-DD-229	4.7	5.3	0	0.75	51.5	III	fair
01-DD-229	5.3	8.5	53	13.25	61.0	II	good
01-DD-229	8.5	11.0	100	11.11	69.7	II	good
01-DD-229	11.0	16.1	96	21.33	70.1	II	good
01-DD-229	16.1	21.0	35	7.00	57.7	III	fair
01-DD-229	21.0	26.0	66	5.50	61.2	II	good
01-DD-229	26.0	31.0	92	20.44	64.1	II	good
01-DD-229	31.0	35.0	95	23.75	64.3	II	good
01-DD-229	35.0	40.0	72	16.00	62.6	II	good
01-DD-229	40.0	45.1	25	4.17	50.6	III	fair
01-DD-229	45.1	47.7	73	18.25	62.8	II	good
01-DD-229	47.7	51.0	97	97.00	73.3	II	good
01-DD-229	51.0	55.3	65	8.13	61.2	II	good
01-DD-230	0.0	4.1	51	25.50	60.7	III	fair
01-DD-230	4.1	8.3	90	67.50	70.8	II	good
01-DD-230	8.3	13.3	92	69.00	64.5	II	good
01-DD-230	13.3	17.6	63	10.50	62.9	II	good
01-DD-230	17.6	21.0	88	29.33	68.6	II	good
01-DD-230	21.0	26.0	76	8.44	61.5	II	good
01-DD-230	26.0	27.3	77	115.50	66.7	II	good
01-DD-230	27.3	31.0	81	40.50	66.4	II	good
01-DD-230	31.0	36.1	65	10.83	62.0	II	good
01-DD-230	36.1	41.0	69	17.25	61.8	II	good
01-DD-230	41.0	46.2	73	4.87	59.0	III	fair
01-DD-230	46.2	51.0	85	5.67	63.1	II	good
01-DD-230	51.0	56.2	94	20.89	69.7	II	good

TABLE A6 - Rock Mass Ratings

Boring ID	Depth (ft)		RQD (%)	Q* Value	Rock Mass Rating (RMR)		
	From	To			Rating	Class Number	Description
01-DD-230	56.2	61.0	42	5.60	58.1	III	fair
01-DD-230	61.0	65.9	82	10.25	66.2	II	good
01-DD-230	65.9	71.0	80	13.33	63.6	II	good
01-DD-230	71.0	76.2	92	15.33	67.6	II	good
01-DD-230	76.2	81.0	69	6.90	63.0	II	good
01-DD-230	81.0	86.0	76	14.25	59.0	III	fair
01-DD-230	86.0	89.9	69	2.88	57.9	III	fair
01-DD-230	89.9	95.0	55	1.72	56.7	III	fair
01-DD-230	95.0	97.1	43	1.79	57.2	III	fair
01-DD-230	97.1	101.0	64	1.60	55.3	III	fair
01-DD-230	101.0	104.8	71	1.48	56.9	III	fair
01-DD-230	104.8	107.0	55	1.38	56.1	III	fair
01-DD-230	107.0	109.9	69	1.44	57.1	III	fair
04-DD-247	0.0	4.0	93	23.13	63.0	IV	good
04-DD-247	4.0	9.0	98	49.00	67.0	IV	good
04-DD-247	9.0	12.3	79	7.39	62.0	IV	good
04-DD-247	12.3	14.0	100	9.38	63.0	IV	good
04-DD-247	14.0	16.0	30	1.88	54.0	III	fair
04-DD-247	16.0	19.0	67	4.17	61.0	IV	good
04-DD-247	19.0	24.0	76	3.17	63.0	IV	good
04-DD-247	24.0	29.0	40	0.74	57.0	III	fair
04-DD-247	29.0	34.0	76	3.17	63.0	IV	good
04-DD-247	34.0	38.0	68	1.88	59.0	III	fair
04-DD-247	38.0	39.0	50	3.13	60.0	III	fair
04-DD-247	39.0	43.3	37	2.33	54.0	III	fair
04-DD-247	43.3	44.0	100	500.00	87.0	V	v. good
04-DD-247	44.0	49.0	88	5.50	63.0	IV	good
04-DD-247	49.0	51.1	100	150.00	78.0	IV	good
04-DD-247	51.1	54.0	86	6.47	64.0	IV	good
04-DD-247	54.0	59.0	100	9.38	68.0	IV	good
04-DD-247	59.0	64.0	95	11.88	70.0	IV	good
04-DD-247	64.0	69.0	95	71.25	69.0	IV	good
04-DD-247	69.0	74.0	74	6.94	61.0	IV	good
04-DD-247	74.0	79.0	96	36.00	76.0	IV	good
04-DD-247	79.0	84.0	82	2.28	65.0	IV	good
04-DD-247	84.0	88.0	58	1.60	59.0	III	fair
04-DD-247	88.0	89.0	100	500.00	87.0	V	v. good
04-DD-247	89.0	94.0	80	10.00	62.0	IV	good
04-DD-247	94.0	99.0	96	144.00	73.0	IV	good
04-DD-247	99.0	104.0	88	6.60	68.0	IV	good
04-DD-248	0.7	5.5	58	10.94	63.0	IV	good
04-DD-248	5.5	10.5	70	8.75	62.0	IV	good
04-DD-248	10.5	15.5	92	7.67	68.0	IV	good
04-DD-248	15.5	20.5	100	37.50	75.0	IV	good
04-DD-248	20.5	23.0	100	500.00	87.0	V	v. good

TABLE A6 - Rock Mass Ratings

Boring ID	Depth (ft)		RQD (%)	Q* Value	Rock Mass Rating (RMR)		
	From	To			Rating	Class Number	Description
04-DD-248	23.0	25.5	100	500.00	87.0	V	v. good
04-DD-248	25.5	30.5	97	18.19	73.0	IV	good
04-DD-248	30.5	35.5	100	18.75	70.0	IV	good
04-DD-248	35.5	40.5	100	9.38	75.0	IV	good
04-DD-248	40.5	45.5	70	4.38	59.0	III	fair
04-DD-248	45.5	50.5	74	0.93	52.0	III	fair
04-DD-248	50.5	55.5	100	18.75	70.0	IV	good
04-DD-248	55.5	60.5	98	490.00	75.0	IV	good
04-DD-248	60.5	65.5	85	10.63	67.0	IV	good
04-DD-248	65.5	68.0	100	18.75	75.0	IV	good
04-DD-248	68.0	70.5	100	75.00	77.0	IV	good
04-DD-248	70.5	75.5	97	18.19	75.0	IV	good
04-DD-248	75.5	80.5	100	75.00	77.0	IV	good
04-DD-248	80.5	85.5	100	6.25	73.0	IV	good
04-DD-248	85.5	90.5	100	25.00	71.0	IV	good
04-DD-248	90.5	95.5	100	37.50	75.0	IV	good
04-DD-248	95.5	100.5	100	18.75	75.0	IV	good
04-DD-248	100.5	105.5	100	500.00	87.0	V	v. good
04-DD-248	105.5	110.5	88	1.65	65.0	IV	good
04-DD-248	110.5	115.5	100	6.25	73.0	IV	good
04-DD-248	115.5	120.5	100	500.00	87.0	V	v. good
04-DD-248	120.5	125.5	100	9.38	68.0	IV	good
04-DD-248	125.5	130.5	100	9.38	70.0	IV	good
04-DD-248	130.5	135.5	100	18.75	75.0	IV	good
04-DD-248	135.5	140.5	94	70.50	77.0	IV	good
04-DD-248	140.5	143.0	100	37.50	75.0	IV	good
04-DD-249	0.7	5.5	62	3.87	54.0	III	fair
04-DD-249	5.5	10.5	94	11.75	65.0	IV	good
04-DD-249	10.5	15.5	84	7.88	60.0	III	fair
04-DD-249	15.5	20.5	96	6.00	67.0	IV	good
04-DD-249	20.5	25.5	94	11.75	63.0	IV	good
04-DD-249	25.5	30.5	100	75.00	72.0	IV	good
04-DD-249	30.5	35.5	100	75.00	74.0	IV	good
04-DD-249	35.5	40.5	100	9.38	68.0	IV	good
04-DD-249	40.5	45.5	86	5.38	61.0	IV	good
04-DD-249	45.5	50.5	72	3.00	58.0	III	fair
04-DD-249	50.5	55.5	100	18.75	70.0	IV	good
04-DD-249	55.5	60.5	100	75.00	72.0	IV	good
04-DD-249	60.5	62.7	100	500.00	82.0	V	v. good
04-DD-249	62.7	65.5	100	500.00	82.0	V	v. good
04-DD-249	65.5	70.5	100	37.50	76.0	IV	good
04-DD-249	70.5	75.5	100	18.75	74.0	IV	good
04-DD-249	75.5	80.5	100	250.00	87.0	V	v. good
04-DD-249	80.5	85.5	100	500.00	87.0	V	v. good
04-DD-249	85.5	90.5	100	500.00	87.0	V	v. good

TABLE A6 - Rock Mass Ratings

Boring ID	Depth (ft)		RQD (%)	Q* Value	Rock Mass Rating (RMR)		
	From	To			Rating	Class Number	Description
04-DD-249	90.5	95.5	100	18.75	82.0	V	v. good
04-DD-249	95.5	100.5	100	12.50	73.0	IV	good
04-DD-249	100.5	105.5	80	10.00	66.0	IV	good
04-DD-249	105.5	110.5	100	6.25	66.0	IV	good
04-DD-249	110.5	115.5	86	1.79	62.0	IV	good
04-DD-249	115.5	120.5	96	12.00	70.0	IV	good
04-DD-249	120.5	125.5	76	4.75	65.0	IV	good
04-DD-249	125.5	130.0	58	0.36	61.0	IV	good
04-DD-249	130.0	135.0	40	1.67	56.0	III	fair
04-DD-249	135.0	140.0	88	5.50	64.0	IV	good
04-DD-249	140.0	142.5	100	6.25	67.0	IV	good
04-DD-250	2.0	5.0	90	67.50	64.0	IV	good
04-DD-250	5.0	10.0	100	12.50	65.0	IV	good
04-DD-250	10.0	15.0	100	500.00	82.0	V	v. good
04-DD-250	15.0	20.0	100	150.00	72.0	IV	good
04-DD-250	20.0	21.1	100	500.00	87.0	V	v. good
04-DD-250	21.1	25.0	100	75.00	73.0	IV	good
04-DD-250	25.0	30.0	95	7.92	70.0	IV	good
04-DD-250	30.0	35.0	78	0.43	59.0	III	fair
04-DD-250	35.0	40.0	91	5.69	68.0	IV	good
04-DD-250	40.0	45.0	57	3.56	59.0	III	fair
04-DD-250	45.0	50.0	42	1.75	52.0	III	fair
04-DD-250	50.0	55.0	35	1.46	53.0	III	fair
04-DD-250	55.0	60.0	80	5.00	62.0	IV	good
04-DD-250	60.0	65.0	100	6.25	69.0	IV	good
04-DD-250	65.0	70.0	92	3.83	69.0	IV	good
04-DD-250	70.0	75.0	100	37.50	72.0	IV	good
04-DD-250	75.0	80.0	100	12.50	68.0	IV	good
04-DD-250	80.0	85.0	96	72.00	77.0	IV	good
04-DD-250	85.0	90.0	90	8.44	70.0	IV	good
04-DD-250	90.0	95.0	100	37.50	75.0	IV	good
04-DD-250	95.0	100.0	100	500.00	87.0	V	v. good
04-DD-250	100.0	105.0	100	500.00	87.0	V	v. good
04-DD-250	105.0	110.0	100	25.00	69.0	IV	good
04-DD-250	110.0	115.0	61	7.63	57.0	III	fair
04-DD-250	115.0	120.0	56	2.10	61.0	IV	good
04-DD-250	120.0	125.0	90	5.63	68.0	IV	good
04-DD-250	125.0	130.0	88	8.25	67.0	IV	good
04-DD-250	130.0	135.0	100	16.67	73.0	IV	good
04-DD-250	135.0	140.0	94	17.63	71.0	IV	good
04-DD-251	0.0	4.0	0	0.00	34.0	II	poor
04-DD-251	4.0	7.8	80	3.33	56.0	III	fair
04-DD-251	10.0	14.2	95	35.71	64.0	IV	good
04-DD-251	14.2	19.2	96	9.00	72.0	IV	good
04-DD-251	19.2	22.1	100	150.00	77.0	IV	good

TABLE A6 - Rock Mass Ratings

Boring ID	Depth (ft)		RQD (%)	Q* Value	Rock Mass Rating (RMR)		
	From	To			Rating	Class Number	Description
04-DD-251	22.1	24.2	100	500.00	87.0	V	v. good
04-DD-251	24.2	29.2	96	12.00	70.0	IV	good
04-DD-251	29.2	34.2	98	18.38	70.0	IV	good
04-DD-251	34.2	39.2	90	33.75	71.0	IV	good
04-DD-251	39.2	44.2	96	8.00	64.0	IV	good
04-DD-251	44.2	49.2	86	2.39	63.0	IV	good
04-DD-251	49.2	54.2	100	4.17	68.0	IV	good
04-DD-251	54.2	59.2	100	6.25	66.0	IV	good
04-DD-251	59.2	64.2	54	1.50	58.0	III	fair
04-DD-251	64.2	69.2	8	0.07	47.0	III	fair
04-DD-251	69.2	73.5	68	4.26	58.0	III	fair
04-DD-251	73.5	74.2	0	0.00	52.0	III	fair
04-DD-251	74.2	79.2	94	8.81	70.0	IV	good
04-DD-251	79.2	84.2	77	3.21	61.0	IV	good
04-DD-251	84.2	89.2	77	4.81	67.0	IV	good
04-DD-251	89.2	94.2	68	2.83	56.0	III	fair
04-DD-251	94.2	99.2	76	4.75	64.0	IV	good
04-DD-251	99.2	104.2	100	8.33	68.0	IV	good
04-DD-251	104.2	109.2	100	4.17	65.0	IV	good
04-DD-251	109.2	114.2	90	7.50	70.0	IV	good
04-DD-251	114.2	119.2	88	3.67	65.0	IV	good
04-DD-251	119.2	124.2	100	12.50	75.0	IV	good
04-DD-251	124.2	129.2	95	17.81	69.0	IV	good
04-DD-251	129.2	134.2	74	6.17	62.0	IV	good
04-DD-251	134.2	139.2	42	2.63	58.0	III	fair
04-DD-251	139.2	144.2	100	75.00	77.0	IV	good
04-DD-252	0.0	4.3	91	8.49	67.0	IV	good
04-DD-252	4.3	9.3	100	6.25	64.0	IV	good
04-DD-252	9.3	14.3	100	150.00	73.0	IV	good
04-DD-252	14.3	19.3	96	36.00	72.0	IV	good
04-DD-252	19.3	24.3	96	36.00	67.0	IV	good
04-DD-252	24.3	29.3	90	33.75	64.0	IV	good
04-DD-252	29.3	34.3	97	48.50	66.0	IV	good
04-DD-252	34.3	39.3	96	12.00	63.0	IV	good
04-DD-252	39.3	44.3	73	12.17	57.0	III	fair
04-DD-252	44.3	49.3	74	0.41	60.0	III	fair
04-DD-252	49.3	52.1	32	0.79	55.0	III	fair
04-DD-252	52.1	54.3	53	0.67	58.0	III	fair
04-DD-252	54.3	59.3	96	72.00	69.0	IV	good
04-DD-252	59.3	64.3	66	2.75	58.0	III	fair
04-DD-252	64.3	69.0	70	1.95	58.0	III	fair
04-DD-252	69.0	71.8	100	12.50	68.0	IV	good
04-DD-252	71.8	74.3	100	18.75	70.0	IV	good
04-DD-252	74.3	78.9	75	3.14	63.0	IV	good
04-DD-252	78.9	83.2	28	5.23	53.0	III	fair

TABLE A6 - Rock Mass Ratings

Boring ID	Depth (ft)		RQD (%)	Q* Value	Rock Mass Rating (RMR)		
	From	To			Rating	Class Number	Description
04-DD-252	83.2	84.2	90	135.00	71.0	IV	good
04-DD-252	84.2	89.2	72	6.75	61.0	IV	good
04-DD-252	89.2	94.2	69	2.88	59.0	III	fair
04-DD-252	94.2	99.2	100	150.00	78.0	IV	good
04-DD-252	99.2	104.2	96	18.00	75.0	IV	good
04-DD-252	104.2	109.2	96	4.00	66.0	IV	good
04-DD-253	1.1	3.4	0	0.00	41.0	III	fair
04-DD-253	3.4	5.5	0	0.00	41.0	III	fair
04-DD-253	5.5	10.5	82	5.13	62.0	IV	good
04-DD-253	10.5	15.5	94	626.67	82.0	V	v. good
04-DD-253	15.5	20.5	96	480.00	63.0	IV	good
04-DD-253	20.5	25.5	100	18.75	71.0	IV	good
04-DD-253	25.5	30.5	98	6.13	68.0	IV	good
04-DD-253	30.5	35.5	92	8.63	68.0	IV	good
04-DD-253	35.5	40.5	66	1.24	61.0	IV	good
04-DD-253	40.5	45.5	100	18.75	70.0	IV	good
04-DD-253	45.5	50.5	100	12.50	66.0	IV	good
04-DD-253	50.5	55.5	76	4.75	64.0	IV	good
04-DD-253	55.5	60.5	79	3.29	65.0	IV	good
04-DD-253	60.5	65.5	96	12.00	73.0	IV	good
04-DD-253	65.5	70.5	100	9.38	70.0	IV	good
04-DD-253	70.5	75.5	54	1.50	61.0	IV	good
04-DD-253	75.5	80.5	100	37.50	73.0	IV	good
04-DD-253	80.5	85.5	94	1.88	68.0	IV	good
04-DD-253	85.5	90.5	100	666.67	87.0	V	v. good
04-DD-253	90.5	95.5	100	666.67	87.0	V	v. good
04-DD-253	95.5	100.5	100	37.50	77.0	IV	good
04-DD-253	100.5	105.5	100	18.75	77.0	IV	good
04-DD-253	105.5	110.5	100	666.67	87.0	V	v. good
04-DD-253	110.5	115.5	100	18.75	75.0	IV	good
04-DD-253	115.5	120.5	100	37.50	75.0	IV	good
04-DD-253	120.5	125.5	100	666.67	87.0	V	v. good
04-DD-253	125.5	130.5	88	8.25	68.0	IV	good
04-DD-253	130.5	135.5	100	75.00	77.0	IV	good
04-DD-253	135.5	140.5	92	3.83	70.0	IV	good
04-DD-253	140.5	145.5	68	2.13	61.0	IV	good
04-DD-253	145.5	150.5	53	2.21	61.0	IV	good
04-DD-253	150.5	153.0	88	8.25	67.0	IV	good
04-DD-254	0.0	5.0	40	1.25	51.0	III	fair
04-DD-254	5.0	10.0	90	1.13	63.0	IV	good
04-DD-254	10.0	15.0	96	18.00	63.0	IV	good
04-DD-254	15.0	20.0	92	3.83	70.0	IV	good
04-DD-254	20.0	25.0	100	6.25	68.0	IV	good
04-DD-254	25.0	30.0	100	4.17	68.0	IV	good
04-DD-254	30.0	35.0	64	1.78	59.0	III	fair

TABLE A6 - Rock Mass Ratings

Boring ID	Depth (ft)		RQD (%)	Q* Value	Rock Mass Rating (RMR)		
	From	To			Rating	Class Number	Description
04-DD-254	35.0	40.0	86	7.17	65.0	IV	good
04-DD-254	40.0	45.0	85	5.31	63.0	IV	good
04-DD-254	45.0	50.0	100	500.00	87.0	V	v. good
04-DD-254	50.0	55.0	95	5.94	69.0	IV	good
04-DD-254	55.0	59.8	53	1.46	61.0	IV	good
04-DD-254	59.8	65.0	59	1.64	59.0	III	fair
04-DD-254	65.0	70.0	66	2.75	59.0	III	fair
04-DD-254	70.0	75.0	88	58.67	67.0	IV	good
04-DD-254	75.0	80.0	70	4.38	59.0	III	fair
04-DD-254	80.0	85.0	90	7.50	68.0	IV	good
04-DD-254	85.0	90.0	96	9.00	63.0	IV	good
04-DD-254	90.0	95.0	100	500.00	84.0	V	v. good
04-DD-254	95.0	100.0	96	6.00	70.0	IV	good
04-DD-254	100.0	105.0	100	18.75	76.0	IV	good
04-DD-254	105.0	110.0	100	6.25	74.0	IV	good
04-DD-254	110.0	115.0	42	1.75	49.0	III	fair
04-DD-254	115.0	120.0	98	12.25	74.0	IV	good
04-DD-254	120.0	125.0	100	18.75	71.0	IV	good
04-DD-254	125.0	130.0	96	9.00	73.0	IV	good
04-DD-254	130.0	135.0	66	8.25	61.0	IV	good
04-DD-254	135.0	140.0	74	9.25	59.0	III	fair
04-DD-254	140.0	141.6	100	500.00	87.0	V	v. good
04-DD-254	141.6	145.0	88	8.27	65.0	IV	good
04-DD-254	145.0	150.0	100	12.50	69.0	IV	good
04-DD-254	150.0	153.0	93	17.50	70.0	IV	good
04-DD-255	0.0	4.3	92	34.41	68.0	IV	good
04-DD-255	4.3	9.3	90	5.63	61.0	IV	good
04-DD-255	9.3	14.3	100	6.25	69.0	IV	good
04-DD-255	14.3	19.3	95	11.88	65.0	IV	good
04-DD-255	19.3	24.3	68	2.55	56.0	III	fair
04-DD-255	24.3	29.3	92	138.00	73.0	IV	good
04-DD-255	29.3	34.3	97	72.75	70.0	IV	good
04-DD-255	34.3	39.3	100	500.00	82.0	V	v. good
04-DD-255	39.3	44.3	96	8.00	61.0	IV	good
04-DD-255	44.3	49.3	50	1.39	59.0	III	fair
04-DD-255	49.3	52.6	54	0.30	61.0	IV	good
04-DD-255	52.6	54.3	0	0.00	52.0	III	fair
04-DD-255	54.3	57.9	58	3.65	59.0	III	fair
04-DD-255	57.9	59.3	93	11.61	67.0	IV	good
04-DD-255	59.3	64.3	100	37.50	76.0	IV	good
04-DD-255	64.3	69.3	94	8.81	71.0	IV	good
04-DD-255	69.3	74.3	68	2.83	60.0	III	fair
04-DD-255	74.3	77.8	53	2.20	61.0	IV	good
04-DD-255	77.8	79.3	53	1.48	61.0	IV	good
04-DD-255	79.3	84.3	60	7.50	61.0	IV	good

TABLE A6 - Rock Mass Ratings

Boring ID	Depth (ft)		RQD (%)	Q* Value	Rock Mass Rating (RMR)		
	From	To			Rating	Class Number	Description
04-DD-255	84.3	89.3	80	30.00	67.0	IV	good
04-DD-255	89.3	94.3	94	35.25	72.0	IV	good
04-DD-255	94.3	99.3	54	3.38	61.0	IV	good
04-DD-255	99.3	104.3	94	3.92	68.0	IV	good
04-DD-255	104.3	109.3	100	500.00	87.0	V	v. good
04-DD-255	109.3	114.3	76	4.75	64.0	IV	good
04-DD-255	114.3	115.8	67	4.17	59.0	III	fair

NOTES
RQD = Rock Quality Designation
Q* = Modified Tunneling Quality Index
RMR = Rock Mass Rating

TABLE A7 - Packer Test Hydraulic Conductivity Calculations

Borehole	Gage Height	Static Water Level	Test ID	Interval		Discharge (Q)		Gage Pressure	Hydraulic Conductivity (K)		
				Top	Bottom	Q (gpm)	Q (ft3/sec)	(psi)	K (ft/sec)	K (ft/min)	K (ft/day)
94-DD-80	0.3	11	1A	156	165	1.6	0.0036	40	2.61E-06	1.57E-04	0.2256
94-DD-80	0.3	11	1B	156	165	5.7	0.0127	80	4.91E-06	2.95E-04	0.4242
94-DD-80	0.3	11	2A	144	158	1.4	0.0031	40	1.51E-06	9.07E-05	0.1305
94-DD-80	0.3	11	2B	144	158	5.3	0.0118	80	3.02E-06	1.81E-04	0.2609
94-DD-80	0.3	11	3A	128	144	0	0.0000	40	0.00E+00	0.00E+00	0.0000
94-DD-80	0.3	11	3B	128	144	0	0.0000	80	0.00E+00	0.00E+00	0.0000
94-DD-80	0.3	11	4A	117	131	0	0.0000	40	0.00E+00	0.00E+00	0.0000
94-DD-80	0.3	11	4B	117	131	0	0.0000	80	0.00E+00	0.00E+00	0.0000
94-DD-80	0.3	11	5A	103	117	0	0.0000	40	0.00E+00	0.00E+00	0.0000
94-DD-80	0.3	11	5B	103	117	0	0.0000	80	0.00E+00	0.00E+00	0.0000
94-DD-80	0.3	11	6A	88	103	0	0.0000	40	0.00E+00	0.00E+00	0.0000
94-DD-80	0.3	11	6B	88	103	0	0.0000	80	0.00E+00	0.00E+00	0.0000
94-DD-80	0.3	11	7A	75	90	0.5	0.0011	40	5.40E-07	3.24E-05	0.0466
94-DD-80	0.3	11	7B	75	90	1.5	0.0033	80	8.54E-07	5.12E-05	0.0738
94-DD-80	0.3	11	8A	64	77	3.2	0.0071	40	3.65E-06	2.19E-04	0.3158
94-DD-80	0.3	11	8B	64	77	9.7	0.0216	80	5.85E-06	3.51E-04	0.5057
94-DD-80	0.3	11	9A	50	64	6.3	0.0140	40	6.81E-06	4.09E-04	0.5886
94-DD-80	0.3	11	9B	50	64	8	0.0178	80	4.56E-06	2.74E-04	0.3940
94-DD-80	0.3	11	10A	37	52	8.1	0.0181	40	8.70E-06	5.22E-04	0.7515
94-DD-80	0.3	11	10B	37	52	4.7	0.0105	80	2.66E-06	1.59E-04	0.2296
94-DD-80	0.3	11	11A	24	38	15.5	0.0346	40	1.68E-05	1.01E-03	1.4531
94-DD-80	0.3	11	11B	24	38	21.9	0.0488	80	1.25E-05	7.52E-04	1.0822
94-DD-80	0.3	11	12A	13	25	6.7	0.0149	40	7.67E-06	4.60E-04	0.6626
94-DD-80	0.3	11	12B	13	25	3	0.0067	20	6.21E-06	3.72E-04	0.5363
94-DD-81	0.3	30.6	1A	178	190	1.3	0.0029	40	1.21E-06	7.24E-05	0.1043
94-DD-81	0.3	30.6	1B	178	190	12.9	0.0288	80	6.88E-06	4.13E-04	0.5941
94-DD-81	0.3	30.6	2A	170	179	18.3	0.0408	40	2.61E-05	1.57E-03	2.2592
94-DD-81	0.3	30.6	2B	170	179	25.7	0.0573	80	2.09E-05	1.25E-03	1.8068
94-DD-81	0.3	30.6	3A	156	170	17.5	0.0390	40	1.61E-05	9.67E-04	1.3928
94-DD-81	0.3	30.6	3B	156	170	30.7	0.0685	80	1.62E-05	9.73E-04	1.4006
94-DD-81	0.3	30.6	4A	143	156	19.7	0.0439	40	1.93E-05	1.16E-03	1.6640

TABLE A7 - Packer Test Hydraulic Conductivity Calculations

Borehole	Gage Height	Static Water Level	Test ID	Interval		Discharge (Q)		Gage Pressure (psi)	Hydraulic Conductivity (K)		
				Top	Bottom	Q (gpm)	Q (ft3/sec)		K (ft/sec)	K (ft/min)	K (ft/day)
94-DD-81	0.3	30.6	4B	143	156	27.8	0.0620	80	1.55E-05	9.29E-04	1.3375
94-DD-81	0.3	30.6	5A	130	144	0	0.0000	40	0.00E+00	0.00E+00	0.0000
94-DD-81	0.3	30.6	5B	130	144	0	0.0000	80	0.00E+00	0.00E+00	0.0000
96-DD-87	0.3	11.8	1A	114	130	1.3	0.0029	45	1.19E-06	7.12E-05	0.1026
96-DD-87	0.3	11.8	2A	104	120	1.1	0.0025	45	1.04E-06	6.21E-05	0.0895
96-DD-87	0.3	11.8	3A	94	110	2.6	0.0058	50	2.23E-06	1.34E-04	0.1923
96-DD-87	0.3	11.8	3B	94	110	1.3	0.0029	25	2.04E-06	1.22E-04	0.1763
96-DD-87	0.3	11.8	4A	84	100	3.1	0.0069	64	2.11E-06	1.27E-04	0.1827
96-DD-87	0.3	11.8	4B	84	100	1.4	0.0031	32	1.78E-06	1.07E-04	0.1539
96-DD-87	0.3	11.8	5A	74	90	2.4	0.0054	65	1.61E-06	9.68E-05	0.1394
96-DD-87	0.3	11.8	5B	74	90	0.8	0.0018	30	1.08E-06	6.46E-05	0.0930
96-DD-87	0.3	11.8	6A	64	80	0.65	0.0014	55	5.10E-07	3.06E-05	0.0441
96-DD-87	0.3	11.8	6B	64	80	0.38	0.0008	35	4.47E-07	2.68E-05	0.0386
96-DD-87	0.3	11.8	7A	55	71	0.58	0.0013	52	4.79E-07	2.87E-05	0.0414
96-DD-87	0.3	11.8	7B	55	71	0.18	0.0004	36	2.07E-07	1.24E-05	0.0179
96-DD-87	0.3	11.8	8A	44	60	0.19	0.0004	50	1.63E-07	9.76E-06	0.0141
96-DD-87	0.3	11.8	8B	44	60	0.1	0.0002	25	1.57E-07	9.42E-06	0.0136
96-DD-87	0.3	11.8	9A	33	48	0.23	0.0005	52	1.90E-07	1.14E-05	0.0164
96-DD-87	0.3	11.8	9B	33	48	0.1	0.0002	26	1.52E-07	9.11E-06	0.0131
96-DD-87	0.3	11.8	10A	22	38	26.1	0.0582	20	5.03E-05	3.02E-03	4.3428
96-DD-87	0.3	11.8	11A	11	26	27	0.0602	15	6.55E-05	3.93E-03	5.6628
99-DD-200	0.3	-17.6	1A	190	205	0	0.0000	31	0.00E+00	0.00E+00	0.0000
99-DD-200	0.3	-17.6	1B	190	205	0.1	0.0002	80	6.51E-08	3.91E-06	0.0056
99-DD-200	0.3	-17.6	2A	175	195	0	0.0000	30	0.00E+00	0.00E+00	0.0000
99-DD-200	0.3	-17.6	2B	175	195	0	0.0000	82	0.00E+00	0.00E+00	0.0000
99-DD-200	0.3	-17.6	3A	161	180	1	0.0022	34	1.55E-06	9.33E-05	0.1343
99-DD-200	0.3	-17.6	3B	161	180	1.6	0.0036	80	9.03E-07	5.42E-05	0.0780
99-DD-200	0.3	-17.6	4A	146	165	0	0.0000	24	0.00E+00	0.00E+00	0.0000
99-DD-200	0.3	-17.6	4B	146	165	0.7	0.0016	52	6.45E-07	3.87E-05	0.0558
99-DD-200	0.3	-17.6	5A	131	151	1.6	0.0036	35	2.40E-06	1.44E-04	0.2070
99-DD-200	0.3	-17.6	5B	131	151	3.1	0.0069	80	1.75E-06	1.05E-04	0.1512

TABLE A7 - Packer Test Hydraulic Conductivity Calculations

Borehole	Gage Height	Static Water Level	Test ID	Interval		Discharge (Q)		Gage Pressure (psi)	Hydraulic Conductivity (K)		
				Top	Bottom	Q (gpm)	Q (ft3/sec)		K (ft/sec)	K (ft/min)	K (ft/day)
99-DD-200	0.3	-17.6	6A	117	136	24.5	0.0546	64	1.76E-05	1.06E-03	1.5246
99-DD-200	0.3	-17.6	6B	117	136	14.8	0.0330	22	4.18E-05	2.51E-03	3.6131
99-DD-200	0.3	-17.6	6C	117	136	19.2	0.0428	52	1.76E-05	1.06E-03	1.5200
99-DD-200	0.3	-17.6	7A	102	122	0.8	0.0018	20	2.67E-06	1.60E-04	0.2303
99-DD-200	0.3	-17.6	7B	102	122	2.6	0.0058	51	2.45E-06	1.47E-04	0.2119
99-DD-200	0.3	-17.6	8A	88	107	0	0.0000	20	0.00E+00	0.00E+00	0.0000
99-DD-200	0.3	-17.6	8B	88	107	0.1	0.0002	52	9.22E-08	5.53E-06	0.0080
99-DD-200	0.3	-17.6	9A	73	93	0	0.0000	25	0.00E+00	0.00E+00	0.0000
99-DD-200	0.3	-17.6	9B	73	93	0	0.0000	55	0.00E+00	0.00E+00	0.0000
99-DD-200	0.3	-17.6	10A	59	78	0	0.0000	24	0.00E+00	0.00E+00	0.0000
99-DD-200	0.3	-17.6	10B	59	78	0	0.0000	50	0.00E+00	0.00E+00	0.0000
99-DD-200	0.3	-17.6	11A	44	64	0	0.0000	25	0.00E+00	0.00E+00	0.0000
99-DD-200	0.3	-17.6	11B	44	64	0	0.0000	53	0.00E+00	0.00E+00	0.0000
99-DD-200	0.3	-17.6	12A	30	49	0.2	0.0004	19	7.26E-07	4.35E-05	0.0627
99-DD-200	0.3	-17.6	12B	30	49	2.4	0.0054	46	2.56E-06	1.54E-04	0.2212
99-DD-201	5.2	22.89	1A	189	203	0	0.0000	30	0.00E+00	0.00E+00	0.0000
99-DD-201	5.2	22.89	1B	189	203	0.2	0.0004	75	1.15E-07	6.88E-06	0.0099
99-DD-201	5.2	22.89	2A	174	194	0	0.0000	27	0.00E+00	0.00E+00	0.0000
99-DD-201	5.2	22.89	2B	174	194	0.4	0.0009	76	1.95E-07	1.17E-05	0.0168
99-DD-201	5.2	22.89	3A	160	179	1.6	0.0036	24	2.06E-06	1.24E-04	0.1780
99-DD-201	5.2	22.89	3B	160	179	2	0.0045	70	1.05E-06	6.30E-05	0.0907
99-DD-201	5.2	22.89	4A	145	165	1.7	0.0038	35	1.62E-06	9.75E-05	0.1404
99-DD-201	5.2	22.89	4B	145	165	2.7	0.0060	60	1.63E-06	9.76E-05	0.1406
99-DD-201	5.2	22.89	5A	131	150	1.2	0.0027	24	1.55E-06	9.27E-05	0.1335
99-DD-201	5.2	22.89	5B	131	150	2.8	0.0062	53	1.88E-06	1.13E-04	0.1626
99-DD-201	5.2	22.89	6A	116	136	1.2	0.0027	26	1.45E-06	8.72E-05	0.1256
99-DD-201	5.2	22.89	6B	116	136	1.8	0.0040	51	1.25E-06	7.51E-05	0.1081
99-DD-201	5.2	22.89	7A	102	121	> 23 gpm - could not pump at high enough rate to achieve pressure					
99-DD-201	5.2	22.89	8A	87	107	> 23 gpm - could not pump at high enough rate to achieve pressure					
99-DD-201	5.2	22.89	9A	73	92	0	0.0000	22	0.00E+00	0.00E+00	0.0000
99-DD-201	5.2	22.89	9B	73	92	0.8	0.0018	52	5.47E-07	3.28E-05	0.0472

TABLE A7 - Packer Test Hydraulic Conductivity Calculations

Borehole	Gage Height	Static Water Level	Test ID	Interval		Discharge (Q)		Gage Pressure (psi)	Hydraulic Conductivity (K)		
				Top	Bottom	Q (gpm)	Q (ft3/sec)		K (ft/sec)	K (ft/min)	K (ft/day)
99-DD-201	5.2	22.89	10A	58	78	0.2	0.0004	58	1.24E-07	7.45E-06	0.0107
99-DD-201	5.2	22.89	10B	58	78	0	0.0000	24	0.00E+00	0.00E+00	0.0000
99-DD-201	5.2	22.89	11A	44	63	0	0.0000	23	0.00E+00	0.00E+00	0.0000
99-DD-201	5.2	22.89	11B	44	63	1.8	0.0040	48	1.32E-06	7.91E-05	0.1139
99-DD-201	5.2	22.89	12A	29	49	11.2	0.0250	25	1.40E-05	8.43E-04	1.2138
99-DD-201	5.2	22.89	12B	29	49	21.4	0.0477	50	1.52E-05	9.12E-04	1.3129
99-DD-203	2	7.98	1A	163	183	0.4	0.0009	52	2.91E-07	1.75E-05	0.0251
99-DD-203	2	7.98	1B	163	183	0	0.0000	25	0.00E+00	0.00E+00	0.0000
99-DD-203	2	7.98	2A	149	168	0	0.0000	50	0.00E+00	0.00E+00	0.0000
99-DD-203	2	7.98	2B	149	168	0	0.0000	25	0.00E+00	0.00E+00	0.0000
99-DD-203	2	7.98	3A	134	154	0	0.0000	52	0.00E+00	0.00E+00	0.0000
99-DD-203	2	7.98	3B	134	154	1	0.0022	85	4.63E-07	2.78E-05	0.0400
99-DD-203	2	7.98	3C	134	154	0	0.0000	50	0.00E+00	0.00E+00	0.0000
99-DD-203	2	7.98	4A	119	139	0	0.0000	57	0.00E+00	0.00E+00	0.0000
99-DD-203	2	7.98	4B	119	139	0	0.0000	25	0.00E+00	0.00E+00	0.0000
99-DD-203	2	7.98	5A	104	124	0	0.0000	59	0.00E+00	0.00E+00	0.0000
99-DD-203	2	7.98	5B	104	124	0	0.0000	30	0.00E+00	0.00E+00	0.0000
99-DD-203	2	7.98	6A	90	109	1.8	0.0040	60	1.17E-06	6.99E-05	0.1007
99-DD-203	2	7.98	6B	90	109	0.9	0.0020	28	1.19E-06	7.15E-05	0.1030
99-DD-203	2	7.98	7A	74	94	3	0.0067	59	1.97E-06	1.18E-04	0.1705
99-DD-203	2	7.98	7B	74	94	1.2	0.0027	25	1.76E-06	1.06E-04	0.1522
99-DD-203	2	7.98	8A	60	80	0	0.0000	58	0.00E+00	0.00E+00	0.0000
99-DD-203	2	7.98	9A	45	65	0	0.0000	30	0.00E+00	0.00E+00	0.0000
99-DD-203	2	7.98	9B	45	65	4.6	0.0103	60	2.98E-06	1.79E-04	0.2574
99-DD-203	2	7.98	10A	31	50	0	0.0000	26	0.00E+00	0.00E+00	0.0000
99-DD-203	2	7.98	10B	31	50	0	0.0000	50	0.00E+00	0.00E+00	0.0000
99-DD-204	2.1	23.18	1A	179	198	0	0.0000	64	0.00E+00	0.00E+00	0.0000
99-DD-204	2.1	23.18	2A	164	184	0	0.0000	65	0.00E+00	0.00E+00	0.0000
99-DD-204	2.1	23.18	3A	150	169	0	0.0000	65	0.00E+00	0.00E+00	0.0000
99-DD-204	2.1	23.18	4A	135	155	0	0.0000	65	0.00E+00	0.00E+00	0.0000
99-DD-204	2.1	23.18	5A	121	140	1.2	0.0027	68	6.34E-07	3.81E-05	0.0548

TABLE A7 - Packer Test Hydraulic Conductivity Calculations

Borehole	Gage Height	Static Water Level	Test ID	Interval		Discharge (Q)		Gage Pressure (psi)	Hydraulic Conductivity (K)		
				Top	Bottom	Q (gpm)	Q (ft3/sec)		K (ft/sec)	K (ft/min)	K (ft/day)
99-DD-204	2.1	23.18	5B	121	140	0.15	0.0003	36	1.36E-07	8.13E-06	0.0117
99-DD-204	2.1	23.18	6A	106	126	0.8	0.0018	69	4.18E-07	2.51E-05	0.0361
99-DD-204	2.1	23.18	6B	106	126	0.15	0.0003	35	1.39E-07	8.32E-06	0.0120
99-DD-204	2.1	23.18	7A	92	111	1.2	0.0027	65	6.60E-07	3.96E-05	0.0570
99-DD-204	2.1	23.18	7B	92	111	0	0.0000	32	0.00E+00	0.00E+00	0.0000
99-DD-204	2.1	23.18	8A	77	97	2.4	0.0054	60	1.42E-06	8.49E-05	0.1223
99-DD-204	2.1	23.18	8B	77	97	1	0.0022	30	1.04E-06	6.25E-05	0.0900
99-DD-204	2.1	23.18	9A	63	82	0	0.0000	60	0.00E+00	0.00E+00	0.0000
99-DD-204	2.1	23.18	10A	48	68	32.8	0.0731	40	2.76E-05	1.66E-03	2.3832
99-DD-204	2.1	23.18	10B	48	68	20.2	0.0450	20	2.86E-05	1.71E-03	2.4685
99-DD-204	2.1	23.18	11A	34	53	10	0.0223	50	6.91E-06	4.15E-04	0.5972
99-DD-204	2.1	23.18	11B	34	53	5.8	0.0129	26	6.75E-06	4.05E-04	0.5832
99-DD-204	2.1	23.18	12A	19	39	40.8	0.0910	22	5.51E-05	3.30E-03	4.7569
99-DD-204	2.1	23.18	12B	19	39	30	0.0669	12	5.95E-05	3.57E-03	5.1389
99-DD-205	6.2	1.8	1A	166	193	3.2	0.0071	36	2.81E-06	1.69E-04	0.2432
99-DD-205	6.2	1.8	1B	166	193	6	0.0134	64	2.90E-06	1.74E-04	0.2503
99-DD-205	6.2	1.8	2A	151	171	9	0.0201	36	1.01E-05	6.05E-04	0.8712
99-DD-205	6.2	1.8	2B	151	171	18.2	0.0406	68	1.05E-05	6.31E-04	0.9088
99-DD-205	6.2	1.8	3A	136	156	17.8	0.0397	31	2.33E-05	1.40E-03	2.0169
99-DD-205	6.2	1.8	3B	136	156	21	0.0468	50	1.67E-05	1.00E-03	1.4403
99-DD-205	6.2	1.8	4A	121	141	14.6	0.0326	52	1.11E-05	6.68E-04	0.9620
99-DD-205	6.2	1.8	4B	121	141	7	0.0156	24	1.21E-05	7.26E-04	1.0456
99-DD-205	6.2	1.8	5A	106	126	1.2	0.0027	25	1.99E-06	1.19E-04	0.1717
99-DD-205	6.2	1.8	5B	106	126	1.4	0.0031	55	1.01E-06	6.05E-05	0.0871
99-DD-205	6.2	1.8	6A	89	109	0.3	0.0007	32	3.81E-07	2.29E-05	0.0329
99-DD-205	6.2	1.8	6B	89	109	0.8	0.0018	60	5.27E-07	3.16E-05	0.0455
99-DD-205	6.2	1.8	7A	76	96	0	0.0000	28	0.00E+00	0.00E+00	0.0000
99-DD-205	6.2	1.8	7B	76	96	0	0.0000	58	0.00E+00	0.00E+00	0.0000
99-DD-205	6.2	1.8	8A	61	81	3.7	0.0083	22	7.04E-06	4.22E-04	0.6084
99-DD-205	6.2	1.8	8B	61	81	6	0.0134	51	4.67E-06	2.80E-04	0.4036
99-DD-205	6.2	1.8	9A	46	66	2	0.0045	22	3.81E-06	2.28E-04	0.3288

TABLE A7 - Packer Test Hydraulic Conductivity Calculations

Borehole	Gage Height	Static Water Level	Test ID	Interval		Discharge (Q)		Gage Pressure (psi)	Hydraulic Conductivity (K)		
				Top	Bottom	Q (gpm)	Q (ft3/sec)		K (ft/sec)	K (ft/min)	K (ft/day)
99-DD-205	6.2	1.8	9B	46	66	8.4	0.0187	50	6.67E-06	4.00E-04	0.5766
99-DD-205	6.2	1.8	10A	31	51	5	0.0112	22	9.51E-06	5.70E-04	0.8212
99-DD-205	6.2	1.8	10B	31	51	7.2	0.0161	38	7.62E-06	4.57E-04	0.6586
99-DD-205	6.2	1.8	11A	16	36	0	0.0000	20	0.00E+00	0.00E+00	0.0000
99-DD-205	6.2	1.8	11B	16	36	0.5	0.0011	40	5.02E-07	3.01E-05	0.0434
99-DD-206	0.3	23.1	1A	166	190	34.5	0.0769	18	4.16E-05	2.50E-03	3.5952
99-DD-206	0.3	23.1	2A	153	173	30.6	0.0682	20	3.92E-05	2.35E-03	3.3844
99-DD-206	0.3	23.1	3A	138	158	31.6	0.0705	80	1.34E-05	8.07E-04	1.1616
99-DD-206	0.3	23.1	3B	138	158	18.6	0.0415	40	1.43E-05	8.56E-04	1.2322
99-DD-206	0.3	23.1	4A	123	143	39	0.0870	25	4.28E-05	2.57E-03	3.6949
99-DD-206	0.3	23.1	5A	108	128	40.8	0.0910	19	5.40E-05	3.24E-03	4.6688
99-DD-206	0.3	23.1	6A	93	113	40.4	0.0901	19	5.35E-05	3.21E-03	4.6231
99-DD-206	0.3	23.1	7A	78	98	0	0.0000	32	0.00E+00	0.00E+00	0.0000
99-DD-206	0.3	23.1	7B	78	98	0	0.0000	59	0.00E+00	0.00E+00	0.0000
99-DD-206	0.3	23.1	8A	63	83	0	0.0000	27	0.00E+00	0.00E+00	0.0000
99-DD-206	0.3	23.1	8B	63	83	0	0.0000	60	0.00E+00	0.00E+00	0.0000
99-DD-206	0.3	23.1	9A	48	68	39.8	0.0888	20	5.14E-05	3.08E-03	4.4386
99-DD-206	0.3	23.1	10A	33	53	18.6	0.0415	55	1.10E-05	6.61E-04	0.9523
99-DD-206	0.3	23.1	10B	33	53	3.2	0.0071	23	3.72E-06	2.23E-04	0.3216
00-DD-207	3.5	8.6	1A	118	140	11.8	0.0263	50	8.10E-06	4.86E-04	0.6994
00-DD-207	3.5	8.6	1B	118	140	7.8	0.0174	25	1.03E-05	6.16E-04	0.8874
00-DD-207	3.5	8.6	2A	103	123	24	0.0535	18	4.57E-05	2.74E-03	3.9471
00-DD-207	3.5	8.6	2B	103	123	40.2	0.0896	36	4.05E-05	2.43E-03	3.4995
00-DD-207	3.5	8.6	3A	88	108	8.4	0.0187	22	1.33E-05	7.98E-04	1.1487
00-DD-207	3.5	8.6	3B	88	108	14.2	0.0317	40	1.29E-05	7.73E-04	1.1132
00-DD-207	3.5	8.6	4A	73	93	10.6	0.0236	12	2.86E-05	1.72E-03	2.4742
00-DD-207	3.5	8.6	4B	73	93	14.6	0.0326	22	2.31E-05	1.39E-03	1.9980
00-DD-207	3.5	8.6	5A	58	78	3.2	0.0071	22	5.06E-06	3.03E-04	0.4369
00-DD-207	3.5	8.6	5B	58	78	14	0.0312	54	9.53E-06	5.72E-04	0.8238
00-DD-207	3.5	8.6	6A	43	63	23.6	0.0526	12	6.40E-05	3.84E-03	5.5317
00-DD-207	3.5	8.6	6B	43	63	20.2	0.0450	8	7.63E-05	4.58E-03	6.5966

TABLE A7 - Packer Test Hydraulic Conductivity Calculations

Borehole	Gage Height	Static Water Level	Test ID	Interval		Discharge (Q)		Gage Pressure (psi)	Hydraulic Conductivity (K)		
				Top	Bottom	Q (gpm)	Q (ft3/sec)		K (ft/sec)	K (ft/min)	K (ft/day)
00-DD-207	3.5	8.6	7A	28	48	10.8	0.0241	25	1.52E-05	9.13E-04	1.3141
00-DD-207	3.5	8.6	7B	28	48	24.25	0.0541	50	1.78E-05	1.07E-03	1.5380
00-DD-207	3.5	8.6	8A	13	33	24	0.0535	6	1.13E-04	6.81E-03	9.7994
00-DD-208	3.5	18.5	1A	134	150	12.7	0.0283	36	1.37E-05	8.22E-04	1.1836
00-DD-208	3.5	18.5	1B	134	150	23.4	0.0522	72	1.37E-05	8.20E-04	1.1810
00-DD-208	3.5	18.5	2A	119	139	14.8	0.0330	26	1.75E-05	1.05E-03	1.5129
00-DD-208	3.5	18.5	2B	119	139	22.2	0.0495	48	1.57E-05	9.39E-04	1.3526
00-DD-208	3.5	18.5	3A	104	124	2.4	0.0054	33	2.32E-06	1.39E-04	0.2008
00-DD-208	3.5	18.5	3B	104	124	4.2	0.0094	65	2.25E-06	1.35E-04	0.1943
00-DD-208	3.5	18.5	4A	89	109	2.6	0.0058	80	1.15E-06	6.90E-05	0.0993
00-DD-208	3.5	18.5	5A	74	94	2	0.0045	70	1.00E-06	6.00E-05	0.0864
00-DD-208	3.5	18.5	6A	59	79	1	0.0022	52	6.54E-07	3.92E-05	0.0565
00-DD-208	3.5	18.5	7A	44	64	0.6	0.0013	36	5.40E-07	3.24E-05	0.0467
00-DD-208	3.5	18.5	8A	29	49	2	0.0045	14	3.73E-06	2.24E-04	0.3226
00-DD-208	3.5	18.5	8B	29	49	3	0.0067	30	3.14E-06	1.89E-04	0.2717
00-DD-209	3.6	19.8	1A	164	180	1.7	0.0038	80	8.92E-07	5.35E-05	0.0771
00-DD-209	3.6	19.8	1B	164	180	1	0.0022	40	9.71E-07	5.83E-05	0.0839
00-DD-209	3.6	19.8	2A	149	169	24.8	0.0553	16	4.19E-05	2.51E-03	3.6172
00-DD-209	3.6	19.8	2B	149	169	14.8	0.0330	8	3.82E-05	2.29E-03	3.2980
00-DD-209	3.6	19.8	3A	134	154	24.6	0.0549	42	1.93E-05	1.16E-03	1.6702
00-DD-209	3.6	19.8	3B	134	154	15.8	0.0352	22	2.10E-05	1.26E-03	1.8117
00-DD-209	3.6	19.8	4A	119	139	12.2	0.0272	42	9.55E-06	5.73E-04	0.8254
00-DD-209	3.6	19.8	4B	119	139	6.2	0.0138	20	8.81E-06	5.28E-04	0.7608
00-DD-209	3.6	19.8	5A	104	124	0.4	0.0009	92	1.54E-07	9.27E-06	0.0133
00-DD-209	3.6	19.8	6A	89	109	2.4	0.0054	74	1.13E-06	6.80E-05	0.0979
00-DD-209	3.6	19.8	6B	89	109	1.2	0.0027	36	1.07E-06	6.40E-05	0.0922
00-DD-209	3.6	19.8	7A	74	94	2.2	0.0049	62	1.22E-06	7.31E-05	0.1053
00-DD-209	3.6	19.8	7B	74	94	1.2	0.0027	30	1.24E-06	7.44E-05	0.1071
00-DD-209	3.6	19.8	8A	59	79	1.2	0.0027	50	8.07E-07	4.84E-05	0.0697
00-DD-209	3.6	19.8	8B	59	79	0.8	0.0018	26	9.27E-07	5.56E-05	0.0801
00-DD-209	3.6	19.8	9A	44	64	11.2	0.0250	38	9.54E-06	5.73E-04	0.8245

TABLE A7 - Packer Test Hydraulic Conductivity Calculations

Borehole	Gage Height	Static Water Level	Test ID	Interval		Discharge (Q)		Gage Pressure (psi)	Hydraulic Conductivity (K)		
				Top	Bottom	Q (gpm)	Q (ft3/sec)		K (ft/sec)	K (ft/min)	K (ft/day)
00-DD-209	3.6	19.8	9B	44	64	6.4	0.0143	20	9.09E-06	5.45E-04	0.7853
00-DD-209	3.6	19.8	10A	29	49	13	0.0290	40	1.06E-05	6.37E-04	0.9169
00-DD-209	3.6	19.8	10B	29	49	5.8	0.0129	20	8.24E-06	4.94E-04	0.7115
00-DD-209	3.6	19.8	11A	14	34	2.6	0.0058	40	2.12E-06	1.27E-04	0.1828
00-DD-209	3.6	19.8	11B	14	34	1.4	0.0031	20	1.98E-06	1.19E-04	0.1713
00-DD-210	3.7	23.5	1A	185	200	25.8	0.0575	28	3.36E-05	2.02E-03	2.9051
00-DD-210	3.7	23.5	1B	185	200	16.2	0.0361	14	3.41E-05	2.05E-03	2.9459
00-DD-210	3.7	23.5	2A	170	190	20.2	0.0450	10	4.23E-05	2.54E-03	3.6536
00-DD-210	3.7	23.5	2B	170	190	27.8	0.0620	20	3.79E-05	2.27E-03	3.2752
00-DD-210	3.7	23.5	3A	155	175	14.2	0.0317	28	1.49E-05	8.96E-04	1.2899
00-DD-210	3.7	23.5	3B	155	175	25	0.0558	56	1.49E-05	8.94E-04	1.2871
00-DD-210	3.7	23.5	4A	140	160	13.8	0.0308	18	2.00E-05	1.20E-03	1.7284
00-DD-210	3.7	23.5	4B	140	160	22.4	0.0500	36	1.94E-05	1.16E-03	1.6728
00-DD-210	3.7	23.5	5A	125	145	8.4	0.0187	30	8.35E-06	5.01E-04	0.7217
00-DD-210	3.7	23.5	5B	125	145	16.8	0.0375	60	9.40E-06	5.64E-04	0.8123
00-DD-210	3.7	23.5	6A	110	130	3.6	0.0080	66	1.85E-06	1.11E-04	0.1595
00-DD-210	3.7	23.5	6B	110	130	12	0.0268	33	1.11E-05	6.65E-04	0.9579
00-DD-210	3.7	23.5	7A	95	115	5.2	0.0116	76	2.35E-06	1.41E-04	0.2033
00-DD-210	3.7	23.5	7B	95	115	2	0.0045	38	1.65E-06	9.92E-05	0.1428
00-DD-210	3.7	23.5	8A	80	100	10.6	0.0236	60	5.93E-06	3.56E-04	0.5120
00-DD-210	3.7	23.5	8B	80	100	5.6	0.0125	30	5.56E-06	3.34E-04	0.4807
00-DD-210	3.7	23.5	9A	65	85	10.4	0.0232	58	5.99E-06	3.59E-04	0.5175
00-DD-210	3.7	23.5	9B	65	85	6.8	0.0152	29	6.94E-06	4.16E-04	0.5995
00-DD-210	3.7	23.5	10A	50	70	0.6	0.0013	50	3.92E-07	2.35E-05	0.0338
00-DD-210	3.7	23.5	10B	50	70	0.2	0.0004	25	2.28E-07	1.37E-05	0.0197
00-DD-210	3.7	23.5	11A	35	55	10.2	0.0227	30	1.02E-05	6.09E-04	0.8777
00-DD-210	3.7	23.5	11B	35	55	3.2	0.0071	15	5.19E-06	3.11E-04	0.4483
00-DD-210	3.7	23.5	12A	20	40	0.4	0.0009	40	3.15E-07	1.89E-05	0.0272
00-DD-210	3.7	23.5	12B	20	40	0	0.0000	20	0.00E+00	0.00E+00	0.0000
00-DD-211	3.7	11.15	1A	125	140	13.7	0.0306	42	1.43E-05	8.57E-04	1.2338
00-DD-211	3.7	11.15	1B	125	140	9	0.0201	20	1.83E-05	1.10E-03	1.5793

TABLE A7 - Packer Test Hydraulic Conductivity Calculations

Borehole	Gage Height	Static Water Level	Test ID	Interval		Discharge (Q)		Gage Pressure (psi)	Hydraulic Conductivity (K)		
				Top	Bottom	Q (gpm)	Q (ft3/sec)		K (ft/sec)	K (ft/min)	K (ft/day)
00-DD-211	3.7	11.15	2A	110	130	6.8	0.0152	62	3.99E-06	2.39E-04	0.3446
00-DD-211	3.7	11.15	2B	110	130	4	0.0089	30	4.60E-06	2.76E-04	0.3977
00-DD-211	3.7	11.15	3A	95	115	5.8	0.0129	66	3.21E-06	1.92E-04	0.2769
00-DD-211	3.7	11.15	3B	95	115	3.9	0.0087	33	4.12E-06	2.47E-04	0.3556
00-DD-211	3.7	11.15	4A	80	100	3	0.0067	80	1.38E-06	8.27E-05	0.1191
00-DD-211	3.7	11.15	4B	80	100	1.4	0.0031	40	1.24E-06	7.43E-05	0.1070
00-DD-211	3.7	11.15	5A	65	85	13.2	0.0294	40	1.17E-05	7.02E-04	1.0106
00-DD-211	3.7	11.15	5B	65	85	7.6	0.0169	20	1.25E-05	7.52E-04	1.0827
00-DD-211	3.7	11.15	6A	50	70	15	0.0335	36	1.47E-05	8.79E-04	1.2658
00-DD-211	3.7	11.15	6B	50	70	9.2	0.0205	18	1.66E-05	9.97E-04	1.4354
00-DD-212	3.7	16.5	1A	140	155	6	0.0134	60	4.39E-06	2.63E-04	0.3792
00-DD-212	3.7	16.5	1B	140	155	3.4	0.0076	30	4.50E-06	2.70E-04	0.3889
00-DD-212	3.7	16.5	2A	125	145	9.8	0.0219	62	5.55E-06	3.33E-04	0.4798
00-DD-212	3.7	16.5	2B	125	145	4.8	0.0107	30	5.17E-06	3.10E-04	0.4468
00-DD-212	3.7	16.5	3A	110	130	3.8	0.0085	60	2.22E-06	1.33E-04	0.1915
00-DD-212	3.7	16.5	3B	110	130	2.6	0.0058	30	2.80E-06	1.68E-04	0.2416
00-DD-212	3.7	16.5	4A	95	115	5.6	0.0125	62	3.17E-06	1.90E-04	0.2741
00-DD-212	3.7	16.5	4B	95	115	3	0.0067	31	3.14E-06	1.88E-04	0.2712
00-DD-212	3.7	16.5	5A	80	100	1.6	0.0036	60	9.33E-07	5.60E-05	0.0806
00-DD-212	3.7	16.5	5B	80	100	0.8	0.0018	30	8.61E-07	5.16E-05	0.0743
00-DD-212	3.7	16.5	6A	65	85	4.6	0.0103	56	2.86E-06	1.72E-04	0.2471
00-DD-212	3.7	16.5	6B	65	85	1	0.0022	28	1.14E-06	6.84E-05	0.0985
00-DD-212	3.7	16.5	7A	50	70	5.6	0.0125	34	5.42E-06	3.25E-04	0.4685
00-DD-212	3.7	16.5	7B	50	70	3.2	0.0071	17	5.43E-06	3.26E-04	0.4688
00-DD-212	3.7	16.5	8A	35	55	5.2	0.0116	40	4.37E-06	2.62E-04	0.3777
00-DD-212	3.7	16.5	8B	35	55	3.6	0.0080	20	5.39E-06	3.23E-04	0.4655
00-DD-213	3.7	3.36	1A	130	145	5.8	0.0129	76	3.60E-06	2.16E-04	0.3109
00-DD-213	3.7	3.36	1B	130	145	0.8	0.0018	38	9.95E-07	5.97E-05	0.0859
00-DD-213	3.7	3.36	2A	115	135	2.4	0.0054	72	1.28E-06	7.66E-05	0.1103
00-DD-213	3.7	3.36	2B	115	135	0.8	0.0018	36	8.53E-07	5.12E-05	0.0737
00-DD-213	3.7	3.36	3A	100	120	4.2	0.0094	90	1.79E-06	1.07E-04	0.1544

TABLE A7 - Packer Test Hydraulic Conductivity Calculations

Borehole	Gage Height	Static Water Level	Test ID	Interval		Discharge (Q)		Gage Pressure (psi)	Hydraulic Conductivity (K)		
				Top	Bottom	Q (gpm)	Q (ft3/sec)		K (ft/sec)	K (ft/min)	K (ft/day)
00-DD-213	3.7	3.36	3B	100	120	2.2	0.0049	45	1.88E-06	1.13E-04	0.1620
00-DD-213	3.7	3.36	4A	85	105	1	0.0022	72	5.32E-07	3.19E-05	0.0460
00-DD-213	3.7	3.36	4B	85	105	0.4	0.0009	36	4.27E-07	2.56E-05	0.0369
00-DD-213	3.7	3.36	5A	70	90	0.6	0.0013	60	3.83E-07	2.30E-05	0.0331
00-DD-213	3.7	3.36	5B	70	90	0.4	0.0009	30	5.12E-07	3.07E-05	0.0443
00-DD-213	3.7	3.36	6A	55	75	1	0.0022	56	6.85E-07	4.11E-05	0.0591
00-DD-213	3.7	3.36	6B	55	75	0.4	0.0009	68	2.25E-07	1.35E-05	0.0195
00-DD-213	3.7	3.36	7A	40	60	5.8	0.0129	34	6.55E-06	3.93E-04	0.5660
00-DD-213	3.7	3.36	7B	40	60	3.2	0.0071	17	7.26E-06	4.36E-04	0.6273
00-DD-213	3.7	3.36	8A	25	45	3.5	0.0078	52	2.58E-06	1.55E-04	0.2230
00-DD-213	3.7	3.36	8B	25	45	2.6	0.0058	26	3.85E-06	2.31E-04	0.3322
00-DD-213	3.7	3.36	9A	10	30	2.6	0.0058	36	2.77E-06	1.66E-04	0.2396
00-DD-213	3.7	3.36	9B	10	30	1.4	0.0031	18	3.00E-06	1.80E-04	0.2591
00-DD-214	3.8	1.2	1A	155	170	21.4	0.0477	16	6.75E-05	4.05E-03	5.8295
00-DD-214	3.8	1.2	1B	155	170	19.3	0.0430	12	8.31E-05	4.99E-03	7.1828
00-DD-214	3.8	1.2	2A	140	160	23.6	0.0526	20	4.77E-05	2.86E-03	4.1175
00-DD-214	3.8	1.2	2B	140	160	12.4	0.0277	10	5.32E-05	3.19E-03	4.5984
00-DD-214	3.8	1.2	3A	125	145	1	0.0022	42	9.35E-07	5.61E-05	0.0808
00-DD-214	3.8	1.2	3B	125	145	0	0.0000	20	0.00E+00	0.00E+00	0.0000
00-DD-214	3.8	1.2	4A	110	130	1.6	0.0036	60	1.04E-06	6.23E-05	0.0898
00-DD-214	3.8	1.2	4B	110	130	0.6	0.0013	30	7.94E-07	4.77E-05	0.0686
00-DD-214	3.8	1.2	5A	95	115	1.6	0.0036	50	1.25E-06	7.51E-05	0.1081
00-DD-214	3.8	1.2	5B	95	115	1	0.0022	25	1.60E-06	9.61E-05	0.1383
00-DD-214	3.8	1.2	6A	80	100	2	0.0045	40	1.97E-06	1.18E-04	0.1699
00-DD-214	3.8	1.2	6B	80	100	1	0.0022	20	2.03E-06	1.22E-04	0.1750
00-DD-214	3.8	1.2	7A	65	85	2.2	0.0049	62	1.38E-06	8.29E-05	0.1194
00-DD-214	3.8	1.2	7B	65	85	1	0.0022	30	1.32E-06	7.94E-05	0.1143
00-DD-214	3.8	1.2	8A	50	70	25.2	0.0562	16	6.45E-05	3.87E-03	5.5737
00-DD-214	3.8	1.2	8B	50	70	19	0.0424	10	8.15E-05	4.89E-03	7.0416
00-DD-214	3.8	1.2	8C	50	70	11.2	0.0250	47	9.33E-06	5.60E-04	0.8060
00-DD-214	3.8	1.2	8D	50	70	2.6	0.0058	22	4.76E-06	2.86E-04	0.4113

TABLE A7 - Packer Test Hydraulic Conductivity Calculations

Borehole	Gage Height	Static Water Level	Test ID	Interval		Discharge (Q)		Gage Pressure (psi)	Hydraulic Conductivity (K)		
				Top	Bottom	Q (gpm)	Q (ft3/sec)		K (ft/sec)	K (ft/min)	K (ft/day)
00-DD-214	3.8	1.2	9A	35	55	8	0.0178	32	9.90E-06	5.94E-04	0.8554
00-DD-214	3.8	1.2	9B	35	55	3.4	0.0076	18	7.70E-06	4.62E-04	0.6654
00-DD-214	3.8	1.2	10A	20	40	22.6	0.0504	22	4.13E-05	2.48E-03	3.5664
00-DD-214	3.8	1.2	10B	20	40	10.8	0.0241	8	5.98E-05	3.59E-03	5.1696
00-DD-214	3.8	1.2	11A	10	30	25.3	0.0564	22	4.62E-05	2.77E-03	3.9922
00-DD-214	3.8	1.2	11B	10	30	18.1	0.0404	10	7.76E-05	4.66E-03	6.7089
00-DD-214	3.8	1.2	11C	10	30	18.2	0.0406	10	7.81E-05	4.68E-03	6.7459
00-DD-216	3.7	5.65	1A	130	145	24.4	0.0544	30	3.73E-05	2.24E-03	3.2208
00-DD-216	3.7	5.65	1B	130	145	15	0.0335	15	4.46E-05	2.68E-03	3.8541
00-DD-216	3.7	5.65	2A	115	135	25	0.0558	30	3.10E-05	1.86E-03	2.6813
00-DD-216	3.7	5.65	2B	115	135	24.2	0.0540	30	3.00E-05	1.80E-03	2.5955
00-DD-216	3.7	5.65	2C	115	135	15	0.0335	15			0.0000
00-DD-216	3.7	5.65	3A	100	120	4.8	0.0335	66	8.58E-06	5.15E-04	0.7414
00-DD-216	3.7	5.65	3B	100	120	2	0.0107	33	5.43E-06	3.26E-04	0.4689
00-DD-216	3.7	5.65	4A	85	105	3.6	0.0045	50	1.50E-06	9.02E-05	0.1299
00-DD-216	3.7	5.65	4B	85	105	2	0.0080	25	5.33E-06	3.20E-04	0.4602
00-DD-216	3.7	5.65	5A	70	90	24.2	0.0045	42	1.79E-06	1.07E-04	0.1544
00-DD-216	3.7	5.65	5B	70	90	15.2	0.0540	22	4.05E-05	2.43E-03	3.5027
00-DD-216	3.7	5.65	6A	55	75	0.6	0.0339	50	1.14E-05	6.86E-04	0.9876
00-DD-216	3.7	5.65	6B	55	75	0	0.0013	25	8.88E-07	5.33E-05	0.0767
00-DD-216	3.7	5.65	7A	40	60	2.8	0.0000	32	0.00E+00	0.00E+00	0.0000
00-DD-216	3.7	5.65	7B	40	60	1.6	0.0062	16	6.36E-06	3.81E-04	0.5491
00-DD-217	3.7	38.2	1A	135	150	5	0.0112	60	3.20E-06	1.92E-04	0.2762
00-DD-217	3.7	38.2	1B	135	150	3.2	0.0071	30	3.35E-06	2.01E-04	0.2894
00-DD-217	3.7	38.2	2A	120	140	5	0.0112	58	2.67E-06	1.60E-04	0.2307
00-DD-217	3.7	38.2	2B	120	140	3.2	0.0071	29	2.78E-06	1.67E-04	0.2405
00-DD-217	3.7	38.2	3A	105	125	5.4	0.0120	80	2.21E-06	1.32E-04	0.1907
00-DD-217	3.7	38.2	3B	105	125	0.6	0.0013	40	4.17E-07	2.50E-05	0.0361
00-DD-217	3.7	38.2	4A	90	110	5.8	0.0129	88	2.16E-06	1.29E-04	0.1864
00-DD-217	3.7	38.2	4B	90	110	1	0.0022	44	6.49E-07	3.89E-05	0.0560
00-DD-217	3.7	38.2	5A	75	95	2.2	0.0049	74	9.46E-07	5.67E-05	0.0817

TABLE A7 - Packer Test Hydraulic Conductivity Calculations

Borehole	Gage Height	Static Water Level	Test ID	Interval		Discharge (Q)		Gage Pressure (psi)	Hydraulic Conductivity (K)		
				Top	Bottom	Q (gpm)	Q (ft3/sec)		K (ft/sec)	K (ft/min)	K (ft/day)
00-DD-217	3.7	38.2	5B	75	95	0.8	0.0018	37	5.89E-07	3.53E-05	0.0509
00-DD-217	3.7	38.2	6A	60	80	7.8	0.0174	54	4.34E-06	2.60E-04	0.3748
00-DD-217	3.7	38.2	6B	60	80	4.2	0.0094	27	3.94E-06	2.36E-04	0.3404
00-DD-217	3.7	38.2	7A	45	65	7.6	0.0169	44	4.95E-06	2.97E-04	0.4273
00-DD-217	3.7	38.2	7B	45	65	4.8	0.0107	24	4.74E-06	2.84E-04	0.4091
00-DD-217	3.7	38.2	8A	30	50	6.6	0.0147	34	5.17E-06	3.10E-04	0.4469
00-DD-217	3.7	38.2	8B	30	50	5	0.0112	27	4.71E-06	2.82E-04	0.4068
00-DD-217	3.7	38.2	9A	15	35	20	0.0446	34	1.70E-05	1.02E-03	1.4716
00-DD-217	3.7	38.2	9B	15	35	9	0.0201	17	1.22E-05	7.33E-04	1.0556
00-DD-218	3.8	32.7	1A	135	150	7.3	0.0163	80	3.72E-06	2.23E-04	0.3213
00-DD-218	3.8	32.7	1B	135	150	4.2	0.0094	40	3.77E-06	2.26E-04	0.3258
00-DD-218	3.8	32.7	2A	120	140	2.4	0.0054	80	9.93E-07	5.96E-05	0.0858
00-DD-218	3.8	32.7	2B	120	140	5	0.0112	40	3.65E-06	2.19E-04	0.3153
00-DD-218	3.8	32.7	3A	105	125	5	0.0112	70	2.32E-06	1.39E-04	0.2005
00-DD-218	3.8	32.7	3B	105	125	0	0.0000	35	0.00E+00	0.00E+00	0.0000
00-DD-218	3.8	32.7	4A	90	110	4	0.0089	80	1.65E-06	9.92E-05	0.1428
00-DD-218	3.8	32.7	4B	90	110	0.6	0.0013	40	4.37E-07	2.62E-05	0.0377
00-DD-218	3.8	32.7	5A	75	95	1.4	0.0031	72	6.33E-07	3.80E-05	0.0547
00-DD-218	3.8	32.7	5B	75	95	0.6	0.0013	36	4.73E-07	2.84E-05	0.0408
00-DD-218	3.8	32.7	6A	60	80	0.2	0.0004	60	1.05E-07	6.33E-06	0.0091
00-DD-218	3.8	32.7	6B	60	80	0	0.0000	30	0.00E+00	0.00E+00	0.0000
00-DD-218	3.8	32.7	7A	45	65	4.5	0.0100	40	3.28E-06	1.97E-04	0.2836
00-DD-218	3.8	32.7	7B	45	65	2.6	0.0058	20	3.06E-06	1.83E-04	0.2640
00-DD-218	3.8	32.7	8A	30	50	4.8	0.0107	32	4.13E-06	2.48E-04	0.3571
00-DD-218	3.8	32.7	8B	30	50	3	0.0067	16	4.02E-06	2.41E-04	0.3473
00-DD-218	3.8	32.7	9A	15	35	7.2	0.0161	30	6.50E-06	3.90E-04	0.5612
00-DD-218	3.8	32.7	9B	15	35	4.6	0.0103	18	5.79E-06	3.47E-04	0.4999
01-DD-222	0.3	14.74	1A	86	103	2.66	0.0059	70	1.39E-06	8.31E-05	0.1198
01-DD-222	0.3	14.74	1B	86	103	0.34	0.0008	34	3.35E-07	2.01E-05	0.0290
01-DD-222	0.3	14.74	2A	73	90	0.84	0.0019	63	5.30E-07	3.18E-05	0.0458
01-DD-222	0.3	14.74	2B	73	90	0.18	0.0004	30	2.17E-07	1.30E-05	0.0187

TABLE A7 - Packer Test Hydraulic Conductivity Calculations

Borehole	Gage Height	Static Water Level	Test ID	Interval		Discharge (Q)		Gage Pressure (psi)	Hydraulic Conductivity (K)		
				Top	Bottom	Q (gpm)	Q (ft3/sec)		K (ft/sec)	K (ft/min)	K (ft/day)
01-DD-222	0.3	14.74	3A	61	77	7.4	0.0165	53	5.47E-06	3.28E-04	0.4727
01-DD-222	0.3	14.74	3B	61	77	3.14	0.0070	30	3.78E-06	2.27E-04	0.3277
01-DD-222	0.3	14.74	4A	49	65	8.34	0.0186	40	7.91E-06	4.75E-04	0.6833
01-DD-222	0.3	14.74	4B	49	65	6.62	0.0148	30	8.01E-06	4.80E-04	0.6918
01-DD-222	0.3	14.74	4C	49	65	6.56	0.0146	30	7.93E-06	4.76E-04	0.6855
01-DD-222	0.3	14.74	5A	36	53	5.74	0.0128	30	6.94E-06	4.16E-04	0.5997
01-DD-222	0.3	14.74	5B	36	53	6.62	0.0148	35	7.03E-06	4.22E-04	0.6077
01-DD-222	0.3	14.74	6A	24	41	1.13	0.0025	30	1.36E-06	8.17E-05	0.1178
01-DD-222	0.3	14.74	6B	24	41	1.056	0.0024	30	1.27E-06	7.64E-05	0.1101
01-DD-222	0.3	14.74	7A	12	28	0	0.0000	30	0.00E+00	0.00E+00	0.0000
01-DD-222	0.3	14.74	7B	12	28	0.02	0.0000	32	2.28E-08	1.37E-06	0.0020
01-DD-222	0.3	14.74	7C	12	28	0.22	0.0005	30	2.65E-07	1.59E-05	0.0229
01-DD-223	0.3	-2	1A	111	131	6.78	0.0151	90	2.75E-06	1.65E-04	0.2375
01-DD-223	0.3	-2	1B	111	131	3.56	0.0079	45	2.91E-06	1.75E-04	0.2515
01-DD-223	0.3	-2	2A	96	116	1.56	0.0035	75	8.03E-07	4.82E-05	0.0694
01-DD-223	0.3	-2	2B	96	116	0.79	0.0018	35	8.82E-07	5.29E-05	0.0762
01-DD-223	0.3	-2	3A	81	101	0.72	0.0016	65	4.28E-07	2.57E-05	0.0370
01-DD-223	0.3	-2	3B	81	101	0.24	0.0005	35	2.68E-07	1.61E-05	0.0231
01-DD-223	0.3	-2	4A	66	86	0.62	0.0014	55	4.37E-07	2.62E-05	0.0377
01-DD-223	0.3	-2	4B	66	86	0.32	0.0007	30	4.18E-07	2.51E-05	0.0361
01-DD-223	0.3	-2	5A	44	64	10.16	0.0227	35	1.13E-05	6.80E-04	0.9789
01-DD-223	0.3	-2	5B	44	64	7.1	0.0158	30	9.27E-06	5.56E-04	0.8011
01-DD-223	0.3	-2	6A	31	51	6.06	0.0135	30	7.91E-06	4.75E-04	0.6838
01-DD-223	0.3	-2	6B	31	51	5.8	0.0129	30	7.57E-06	4.54E-04	0.6545
01-DD-223	0.3	-2	7A	16	36	5.66	0.0126	30	7.39E-06	4.44E-04	0.6387
01-DD-223	0.3	-2	7B	16	36	5.8	0.0129	30	7.57E-06	4.54E-04	0.6545
01-DD-224	0.3	28.32	1A	109	122	1.57	0.0035	90	8.39E-07	5.03E-05	0.0725
01-DD-224	0.3	28.32	1B	109	122	1.1	0.0025	45	1.03E-06	6.17E-05	0.0888
01-DD-224	0.3	28.32	2A	97	113	1.88	0.0042	80	9.31E-07	5.59E-05	0.0804
01-DD-224	0.3	28.32	2B	97	113	1.32	0.0029	40	1.13E-06	6.77E-05	0.0975
01-DD-224	0.3	28.32	3A	85	101	0.76	0.0017	70	4.21E-07	2.52E-05	0.0363

TABLE A7 - Packer Test Hydraulic Conductivity Calculations

Borehole	Gage Height	Static Water Level	Test ID	Interval		Discharge (Q)		Gage Pressure (psi)	Hydraulic Conductivity (K)		
				Top	Bottom	Q (gpm)	Q (ft3/sec)		K (ft/sec)	K (ft/min)	K (ft/day)
01-DD-224	0.3	28.32	3B	85	101	0.62	0.0014	35	5.83E-07	3.50E-05	0.0504
01-DD-224	0.3	28.32	4A	73	89	2.1	0.0047	60	1.32E-06	7.90E-05	0.1138
01-DD-224	0.3	28.32	4B	73	89	1.16	0.0026	30	1.21E-06	7.27E-05	0.1047
01-DD-224	0.3	28.32	5A	61	77	1.26	0.0028	50	9.12E-07	5.47E-05	0.0788
01-DD-224	0.3	28.32	5B	61	77	0.72	0.0016	30	7.52E-07	4.51E-05	0.0650
01-DD-224	0.3	28.32	6A	49	65	11.1	0.0248	40	9.58E-06	5.75E-04	0.8281
01-DD-224	0.3	28.32	6B	49	65	8.98	0.0200	30	9.47E-06	5.68E-04	0.8186
01-DD-224	0.3	28.32	7A	36	53	14.54	0.0324	30	1.54E-05	9.27E-04	1.3349
01-DD-224	0.3	28.32	7B	36	53	16.16	0.0360	30	1.72E-05	1.03E-03	1.4866
01-DD-224	0.3	28.32	8A	24	40	19.2	0.0428	30	2.06E-05	1.23E-03	1.7772
01-DD-224	0.3	28.32	8B	24	40	18.84	0.0420	30	2.02E-05	1.21E-03	1.7421
01-DD-224	0.3	28.32	9A	12	28	13.86	0.0309	30	1.60E-05	9.59E-04	1.3811
01-DD-224	0.3	28.32	9B	12	28	12.9	0.0288	30	1.49E-05	8.91E-04	1.2831
01-DD-225	0.3	2.68	1A	102	115	3.78	0.0084	85	2.46E-06	1.47E-04	0.2122
01-DD-225	0.3	2.68	1B	102	115	1.82	0.0041	45	2.20E-06	1.32E-04	0.1903
01-DD-225	0.3	2.68	2A	91	106	6.3	0.0140	75	3.97E-06	2.38E-04	0.3434
01-DD-225	0.3	2.68	2B	91	106	3.02	0.0067	35	4.00E-06	2.40E-04	0.3454
01-DD-225	0.3	2.68	3A	79	95	1.52	0.0034	70	1.03E-06	6.15E-05	0.0886
01-DD-225	0.3	2.68	3B	79	95	0.84	0.0019	35	1.11E-06	6.67E-05	0.0961
01-DD-225	0.3	2.68	4A	68	83	0.44	0.0010	55	3.76E-07	2.26E-05	0.0325
01-DD-225	0.3	2.68	4B	68	83	0.14	0.0003	30	2.15E-07	1.29E-05	0.0186
01-DD-225	0.3	2.68	5A	56	72	0	0.0000	45	0.00E+00	0.00E+00	0.0000
01-DD-225	0.3	2.68	5B	56	72	0	0.0000	30	0.00E+00	0.00E+00	0.0000
01-DD-225	0.3	2.68	6A	45	60	0	0.0000	35	0.00E+00	0.00E+00	0.0000
01-DD-225	0.3	2.68	6B	45	60	-0.1	-0.0002	30	---	---	---
01-DD-225	0.3	2.68	6C	45	60	0	0.0000	35	0.00E+00	0.00E+00	0.0000
01-DD-225	0.3	2.68	6D	45	60	-0.02	0.0000	30	---	---	---
01-DD-225	0.3	2.68	7A	33	49	0.18	0.0004	30	2.76E-07	1.66E-05	0.0239
01-DD-225	0.3	2.68	7B	33	49	0.12	0.0003	30	1.84E-07	1.11E-05	0.0159
01-DD-225	0.3	2.68	8A	22	37	0.02	0.0000	30	3.07E-08	1.84E-06	0.0027
01-DD-225	0.3	2.68	8B	22	37	0	0.0000	30	0.00E+00	0.00E+00	0.0000

TABLE A7 - Packer Test Hydraulic Conductivity Calculations

Borehole	Gage Height	Static Water Level	Test ID	Interval		Discharge (Q)		Gage Pressure (psi)	Hydraulic Conductivity (K)		
				Top	Bottom	Q (gpm)	Q (ft3/sec)		K (ft/sec)	K (ft/min)	K (ft/day)
01-DD-225	0.3	2.68	9A	10	26	0.28	0.0006	30	4.30E-07	2.58E-05	0.0371
01-DD-225	0.3	2.68	9B	10	26	0.22	0.0005	30	3.38E-07	2.03E-05	0.0292
01-DD-226	0.3	5.11	1A	126	143	21.02	0.0469	60	1.37E-05	8.21E-04	1.1823
01-DD-226	0.3	5.11	1B	126	143	20.8	0.0464	50	1.61E-05	9.68E-04	1.3938
01-DD-226	0.3	5.11	2A	113	130	25	0.0558	60	1.64E-05	9.84E-04	1.4170
01-DD-226	0.3	5.11	2B	113	130	21.86	0.0487	45	1.89E-05	1.13E-03	1.6314
01-DD-226	0.3	5.11	3A	100	117	17.8	0.0397	80	8.82E-06	5.29E-04	0.7624
01-DD-226	0.3	5.11	3B	100	117	8.46	0.0189	40	8.15E-06	4.89E-04	0.7038
01-DD-226	0.3	5.11	4A	87	104	15.3	0.0341	70	8.63E-06	5.18E-04	0.7457
01-DD-226	0.3	5.11	4B	87	104	6.82	0.0152	35	7.44E-06	4.47E-04	0.6430
01-DD-226	0.3	5.11	5A	74	91	1.8	0.0040	60	1.18E-06	7.06E-05	0.1016
01-DD-226	0.3	5.11	5B	74	91	1	0.0022	30	1.26E-06	7.55E-05	0.1087
01-DD-226	0.3	5.11	6A	61	78	5.04	0.0112	50	3.92E-06	2.35E-04	0.3390
01-DD-226	0.3	5.11	6B	61	78	2.66	0.0059	30	3.35E-06	2.01E-04	0.2891
01-DD-226	0.3	5.11	7A	48	65	5.7	0.0127	40	5.49E-06	3.29E-04	0.4739
01-DD-226	0.3	5.11	7B	48	65	4.64	0.0103	30	5.84E-06	3.50E-04	0.5042
01-DD-226	0.3	5.11	8A	35	52	0.86	0.0019	30	1.08E-06	6.49E-05	0.0935
01-DD-226	0.3	5.11	8B	35	52	0.78	0.0017	30	9.81E-07	5.89E-05	0.0848
01-DD-226	0.3	5.11	9A	22	39	1.24	0.0028	30	1.56E-06	9.36E-05	0.1348
01-DD-226	0.3	5.11	9B	22	39	1.08	0.0024	30	1.36E-06	8.15E-05	0.1174
01-DD-228	0.3	112	1A	147	165	22.1	0.0493	120	5.42E-06	3.25E-04	0.4683
01-DD-228	0.3	112	1B	147	165	7.4	0.0165	60	2.78E-06	1.67E-04	0.2398
01-DD-228	0.3	112	2A	132	152	6.08	0.0136	105	1.52E-06	9.15E-05	0.1317
01-DD-228	0.3	112	2B	132	152	1.92	0.0043	55	7.10E-07	4.26E-05	0.0613
01-DD-228	0.3	112	3A	117	137	2.46	0.0055	90	6.80E-07	4.08E-05	0.0587
01-DD-228	0.3	112	3B	117	137	1.06	0.0024	45	4.34E-07	2.60E-05	0.0375
01-DD-228	0.3	112	4A	102	122	0.04	0.0001	80	1.19E-08	7.15E-07	0.0010
01-DD-228	0.3	112	4B	102	122	0	0.0000	40	0.00E+00	0.00E+00	0.0000
01-DD-228	0.3	112	5A	87	107	0.84	0.0019	70	2.79E-07	1.67E-05	0.0241
01-DD-228	0.3	112	5B	87	107	0.46	0.0010	35	2.19E-07	1.31E-05	0.0189
01-DD-228	0.3	112	6A	72	92	0.16	0.0004	60	5.64E-08	3.38E-06	0.0049

TABLE A7 - Packer Test Hydraulic Conductivity Calculations

Borehole	Gage Height	Static Water Level	Test ID	Interval		Discharge (Q)		Gage Pressure (psi)	Hydraulic Conductivity (K)		
				Top	Bottom	Q (gpm)	Q (ft3/sec)		K (ft/sec)	K (ft/min)	K (ft/day)
01-DD-228	0.3	112	6B	72	92	0.1	0.0002	30	4.87E-08	2.92E-06	0.0042
01-DD-228	0.3	112	7A	57	77	0.12	0.0003	45	4.74E-08	2.84E-06	0.0041
01-DD-228	0.3	112	7B	57	77	0.08	0.0002	30	3.74E-08	2.24E-06	0.0032
01-DD-228	0.3	112	8A	42	62	2.08	0.0046	35	8.83E-07	5.30E-05	0.0763
01-DD-228	0.3	112	8B	42	62	1.96	0.0044	30	8.81E-07	5.29E-05	0.0762
01-DD-228	0.3	112	9A	27	47	17.2	0.0384	30	7.72E-06	4.63E-04	0.6671
01-DD-228	0.3	112	9B	27	47	17.52	0.0391	30	7.86E-06	4.72E-04	0.6795
01-DD-230	0.3	8.13	1A	66	78	5.8	0.0129	55	5.71E-06	3.43E-04	0.4933
01-DD-230	0.3	8.13	1B	66	78	3.88	0.0087	30	6.55E-06	3.93E-04	0.5658
01-DD-230	0.3	8.13	2A	56	70	4.32	0.0096	45	4.25E-06	2.55E-04	0.3670
01-DD-230	0.3	8.13	2B	56	70	3.5	0.0078	30	4.91E-06	2.95E-04	0.4246
01-DD-230	0.3	8.13	3A	45	59	1.14	0.0025	35	1.40E-06	8.41E-05	0.1211
01-DD-230	0.3	8.13	3B	45	59	0.98	0.0022	30	1.38E-06	8.26E-05	0.1190
03-DD-231	11.2	16.3	1A	129	148	17.2	0.0383	38	1.32E-05	7.91E-04	1.1392
03-DD-231	11.2	16.3	3A	99	119	16.4	0.0365	39	1.23E-05	7.38E-04	1.0621
03-DD-231	11.2	16.3	4B	84	104	16	0.0356	35	1.30E-05	7.82E-04	1.1254
03-DD-231	11.2	16.3	5B	69	89	14.4	0.0321	30	1.31E-05	7.87E-04	1.1335
03-DD-231	11.2	16.3	6A	54	74	3.3	0.0074	45	2.18E-06	1.31E-04	0.1884
03-DD-231	11.2	16.3	6B	54	74	1.7	0.0038	25	1.73E-06	1.04E-04	0.1496
03-DD-231	11.2	16.3	7A	39	59	1	0.0022	30	8.97E-07	5.38E-05	0.0775
03-DD-231	11.2	16.3	7B	39	59	-4.6	-0.0102	0	-1.47E-05	-8.82E-04	1.2707
03-DD-231	11.2	16.3	8A	24	44	1.94	0.0043	20	2.29E-06	1.37E-04	0.1975
03-DD-231	11.2	16.3	8B	24	44	0.7	0.0016	10	1.20E-06	7.21E-05	0.1038
03-DD-232	14.6	7.5	1A	135	156	11	0.0245	70	4.88E-06	2.93E-04	0.4214
03-DD-232	14.6	7.5	1B	135	156	9.38	0.0209	55	5.13E-06	3.08E-04	0.4431
03-DD-232	14.6	7.5	2A	120	140	10.22	0.0228	55	5.98E-06	3.59E-04	0.5171
03-DD-232	14.6	7.5	2B	120	140	8.64	0.0192	45	5.98E-06	3.59E-04	0.5167
03-DD-232	14.6	7.5	3A	105	125	10.24	0.0228	40	7.82E-06	4.69E-04	0.6759
03-DD-232	14.6	7.5	3B	105	125	1.38	0.0031	40	1.05E-06	6.28E-05	0.0905
03-DD-232	14.6	7.5	4A	90	110	10.1	0.0225	40	7.72E-06	4.63E-04	0.6667
03-DD-232	14.6	7.5	4B	90	110	8.8	0.0196	35	7.47E-06	4.48E-04	0.6450

TABLE A7 - Packer Test Hydraulic Conductivity Calculations

Borehole	Gage Height	Static Water Level	Test ID	Interval		Discharge (Q)		Gage Pressure (psi)	Hydraulic Conductivity (K)		
				Top	Bottom	Q (gpm)	Q (ft3/sec)		K (ft/sec)	K (ft/min)	K (ft/day)
03-DD-232	14.6	7.5	5A	75	95	2.3	0.0051	60	1.24E-06	7.46E-05	0.1074
03-DD-232	14.6	7.5	5B	75	95	1.08	0.0024	30	1.03E-06	6.16E-05	0.0887
03-DD-232	14.6	7.5	6A	60	80	1.68	0.0037	45	1.16E-06	6.95E-05	0.1000
03-DD-232	14.6	7.5	6B	60	80	1.36	0.0030	25	1.48E-06	8.88E-05	0.1278
03-DD-232	14.6	7.5	7A	45	65	8.48	0.0189	35	7.19E-06	4.32E-04	0.6214
03-DD-232	14.6	7.5	7B	45	65	6.5	0.0145	20	8.33E-06	5.00E-04	0.7195
03-DD-232	14.6	7.5	8A	30	50	4.04	0.0090	25	4.41E-06	2.65E-04	0.3810
03-DD-232	14.6	7.5	8B	30	50	2.82	0.0063	15	4.32E-06	2.59E-04	0.3729
03-DD-233	2.5	16.5	1A	142	163	0.14	0.0003	110	4.16E-08	2.50E-06	0.0036
03-DD-233	2.5	16.5	1B	142	163	0.06	0.0001	55	3.33E-08	2.00E-06	0.0029
03-DD-233	2.5	16.5	2A	127	147	0.84	0.0019	100	2.92E-07	1.75E-05	0.0252
03-DD-233	2.5	16.5	2B	127	147	0.36	0.0008	50	2.33E-07	1.40E-05	0.0201
03-DD-233	2.5	16.5	3A	112	132	3.5	0.0078	90	1.34E-06	8.04E-05	0.1158
03-DD-233	2.5	16.5	3B	112	132	0.86	0.0019	45	6.08E-07	3.65E-05	0.0525
03-DD-233	2.5	16.5	4A	97	117	5.84	0.0130	80	2.49E-06	1.50E-04	0.2155
03-DD-233	2.5	16.5	4B	97	117	3.8	0.0085	40	2.96E-06	1.78E-04	0.2560
03-DD-233	2.5	16.5	5A	82	102	12.9	0.0287	65	6.66E-06	4.00E-04	0.5757
03-DD-233	2.5	16.5	5B	82	102	8.84	0.0197	35	7.73E-06	4.64E-04	0.6677
03-DD-233	2.5	16.5	6A	67	87	16.92	0.0377	40	1.33E-05	8.00E-04	1.1523
03-DD-233	2.5	16.5	6B	67	87	10.66	0.0238	20	1.44E-05	8.61E-04	1.2400
03-DD-233	2.5	16.5	7A	52	72	5.4	0.0120	40	4.23E-06	2.54E-04	0.3651
03-DD-233	2.5	16.5	7B	52	72	9.64	0.0215	20	1.30E-05	7.79E-04	1.1212
03-DD-233	2.5	16.5	8A	37	57	11.92	0.0266	30	1.18E-05	7.10E-04	1.0228
03-DD-233	2.5	16.5	8B	37	57	-0.34	-0.0008	20	-4.53E-07	-2.72E-05	-0.0391
03-DD-233	2.5	16.5	9A	22	42	9.6	0.0214	20	1.29E-05	7.75E-04	1.1165
03-DD-233	2.5	16.5	9B	22	42	4.64	0.0103	10	9.63E-06	5.78E-04	0.8323
03-DD-234	6.53	9	1A	93	107	0.2	0.0004	75	1.26E-07	7.54E-06	0.0109
03-DD-234	6.53	9	1B	93	107	0.1	0.0002	40	1.10E-07	6.59E-06	0.0095
03-DD-234	6.53	9	2A	78	98	-1.42	-0.0032	60	-8.00E-07	-4.80E-05	-0.0692
03-DD-234	6.53	9	2B	78	98	-3.18	-0.0071	30	-3.26E-06	-1.95E-04	-0.2814
03-DD-234	6.53	9	3A	63	83	0.86	0.0019	50	5.70E-07	3.42E-05	0.0493

TABLE A7 - Packer Test Hydraulic Conductivity Calculations

Borehole	Gage Height	Static Water Level	Test ID	Interval		Discharge (Q)		Gage Pressure (psi)	Hydraulic Conductivity (K)		
				Top	Bottom	Q (gpm)	Q (ft3/sec)		K (ft/sec)	K (ft/min)	K (ft/day)
03-DD-234	6.53	9	3B	63	83	0.38	0.0008	25	4.50E-07	2.70E-05	0.0389
03-DD-234	6.53	9	4A	48	68	-1.1	-0.0025	40	-8.85E-07	-5.31E-05	-0.0765
03-DD-234	6.53	9	4B	48	68	-5.1	-0.0114	20	-7.18E-06	-4.31E-04	-0.6200
03-DD-234	6.53	9	5A	33	53	0.88	0.0020	25	1.04E-06	6.26E-05	0.0901
03-DD-234	6.53	9	5B	33	53	-3.48	-0.0078	15	-6.02E-06	-3.61E-04	-0.5204
03-DD-235	2.5	5.5	1A	92	110	0.86	0.0019	75	4.75E-07	2.85E-05	0.0410
03-DD-235	2.5	5.5	1B	92	110	0.36	0.0008	35	4.06E-07	2.43E-05	0.0351
03-DD-235	2.5	5.5	2A	77	97	-1.16	-0.0026	60	-6.87E-07	-4.12E-05	-0.0594
03-DD-235	2.5	5.5	2B	77	97	-1.86	-0.0041	30	-2.09E-06	-1.25E-04	-0.1806
03-DD-235	2.5	5.5	3A	62	82	-1.52	-0.0034	50	-1.07E-06	-6.42E-05	-0.0924
03-DD-235	2.5	5.5	3B	62	82	-3.86	-0.0086	25	-5.10E-06	-3.06E-04	-0.4407
03-DD-235	2.5	5.5	4A	47	67	0.44	0.0010	40	3.81E-07	2.28E-05	0.0329
03-DD-235	2.5	5.5	4B	47	67	-1.86	-0.0041	20	-2.98E-06	-1.79E-04	-0.2576
03-DD-235	2.5	5.5	5A	32	52	-2.94	-0.0066	25	-3.88E-06	-2.33E-04	-0.3356
03-DD-235	2.5	5.5	5B	32	52	-1.98	-0.0044	15	-4.03E-06	-2.42E-04	-0.3484
03-DD-236	2.5	9	1A	102	117	8.2	0.0183	75	5.06E-06	3.04E-04	0.4373
03-DD-236	2.5	9	1B	102	117	6.44	0.0143	40	7.07E-06	4.24E-04	0.6112
03-DD-236	2.5	9	2A	87	107	4.98	0.0111	70	2.50E-06	1.50E-04	0.2161
03-DD-236	2.5	9	2B	87	107	2.46	0.0055	35	2.31E-06	1.39E-04	0.1999
03-DD-236	2.5	9	3A	72	92	6.1	0.0136	60	3.54E-06	2.12E-04	0.3056
03-DD-236	2.5	9	3B	72	92	4.02	0.0090	30	4.33E-06	2.60E-04	0.3741
03-DD-236	2.5	9	4A	57	77	9.64	0.0215	45	7.28E-06	4.37E-04	0.6290
03-DD-236	2.5	9	4B	57	77	6.62	0.0147	25	8.34E-06	5.00E-04	0.7203
03-DD-236	2.5	9	5A	42	62	7.04	0.0157	35	6.64E-06	3.99E-04	0.5739
03-DD-236	2.5	9	5B	42	62	4.34	0.0097	20	6.55E-06	3.93E-04	0.5659
03-DD-236	2.5	9	6A	27	47	5	0.0111	20	7.55E-06	4.53E-04	0.6527
03-DD-236	2.5	9	6B	27	47	2.22	0.0049	10	5.57E-06	3.34E-04	0.4815
03-DD-237	14.7	11.6	2A	103	123	0.9	0.0020	80	3.61E-07	2.17E-05	0.0312
03-DD-237	14.7	11.6	2B	103	123	0.66	0.0015	40	4.71E-07	2.83E-05	0.0407
03-DD-237	14.7	11.6	3A	88	108	1.18	0.0026	70	5.45E-07	3.27E-05	0.0471
03-DD-237	14.7	11.6	3B	88	108	0.76	0.0017	35	6.16E-07	3.70E-05	0.0532

TABLE A7 - Packer Test Hydraulic Conductivity Calculations

Borehole	Gage Height	Static Water Level	Test ID	Interval		Discharge (Q)		Gage Pressure (psi)	Hydraulic Conductivity (K)		
				Top	Bottom	Q (gpm)	Q (ft3/sec)		K (ft/sec)	K (ft/min)	K (ft/day)
03-DD-237	14.7	11.6	4A	73	93	1.04	0.0023	60	5.48E-07	3.29E-05	0.0473
03-DD-237	14.7	11.6	4B	73	93	1.14	0.0025	30	1.04E-06	6.21E-05	0.0895
03-DD-237	14.7	11.6	5A	58	78	0.8	0.0018	45	5.34E-07	3.20E-05	0.0461
03-DD-237	14.7	11.6	5B	58	78	0.36	0.0008	25	3.72E-07	2.23E-05	0.0321
03-DD-237	14.7	11.6	6A	43	63	2.56	0.0057	35	2.08E-06	1.25E-04	0.1793
03-DD-237	14.7	11.6	6B	43	63	1.74	0.0039	20	2.08E-06	1.25E-04	0.1801
03-DD-237	14.7	11.6	7A	28	48	1.44	0.0032	20	1.72E-06	1.03E-04	0.1490
03-DD-237	14.7	11.6	7B	28	48	0.82	0.0018	10	1.44E-06	8.65E-05	0.1245
03-DD-238	15.1	2.9	1A	124	140	1.02	0.0023	95	4.74E-07	2.84E-05	0.0409
03-DD-238	15.1	2.9	1B	124	140	0.5	0.0011	50	4.13E-07	2.48E-05	0.0357
03-DD-238	15.1	2.9	2A	109	129	0.98	0.0022	85	3.97E-07	2.38E-05	0.0343
03-DD-238	15.1	2.9	2B	109	129	0.62	0.0014	45	4.42E-07	2.65E-05	0.0382
03-DD-238	15.1	2.9	3A	94	114	0.7	0.0016	75	3.18E-07	1.91E-05	0.0275
03-DD-238	15.1	2.9	3B	94	114	0.24	0.0005	40	1.89E-07	1.13E-05	0.0163
03-DD-238	15.1	2.9	4A	79	99	1.36	0.0030	60	7.54E-07	4.53E-05	0.0652
03-DD-238	15.1	2.9	4B	79	99	0.68	0.0015	30	6.77E-07	4.06E-05	0.0585
03-DD-238	15.1	2.9	5A	64	84	6.66	0.0148	50	4.35E-06	2.61E-04	0.3756
03-DD-238	15.1	2.9	5B	64	84	3.44	0.0077	25	3.94E-06	2.37E-04	0.3408
03-DD-238	15.1	2.9	6A	49	69	3.74	0.0083	40	2.94E-06	1.77E-04	0.2543
03-DD-238	15.1	2.9	6B	49	69	1.38	0.0031	20	1.87E-06	1.12E-04	0.1613
03-DD-238	15.1	2.9	7A	34	54	0.12	0.0003	25	1.38E-07	8.26E-06	0.0119
03-DD-238	15.1	2.9	7B	34	54	0.08	0.0002	15	1.32E-07	7.92E-06	0.0114
04-DD-244	-	-	1A	0	29	1.5	0.0033	60	8.04E-07	4.83E-05	0.0695
04-DD-244	-	-	1B	0	29	0.67	0.0015	29	3.62E-07	2.17E-05	0.0313
04-DD-245	-	-	1A	0	24	3.59	0.0080	57.5	2.38E-06	1.43E-04	0.2057
04-DD-245	-	-	1B	0	24	2.39	0.0053	32	1.59E-06	9.52E-05	0.1372
04-DD-246	-	-	1A	60	81	1.65	0.0037	60	1.20E-06	7.21E-05	0.1038
04-DD-246	-	-	2A	40	81	1.87	0.0042	60	7.12E-07	4.27E-05	0.0615
04-DD-246	-	-	3A	20	81	3.74	0.0083	52	9.63E-07	5.78E-05	0.0832
04-DD-246	-	-	3B	20	81	2.24	0.0050	30	5.78E-07	3.47E-05	0.0499

TABLE A8 - Pumping Test Hydraulic Conductivity Averages

Measured Borehole	Surface Elevation (ft)	Bottom of Borehole Elevation (ft)	Calculated Hydraulic Conductivity (ft/day)					
			Test Borehole 00-RD-215			Test Borehole 01-RD-219		
			Neuman Method		Cooper-Jacob Method	Neuman Method		Cooper-Jacob Method
			Horizontal	Vertical		Horizontal	Vertical	
96-DD-87	1165.7	964.9	1.08	12.14	4.51	1.2	1.67	1.46
99-DD-200	1164.5	959.2	0.93	0.45	2.65			
99-DD-205	1168.6	975.6	1.21	0.56	1.38	1.71	0.29	1.65
99-DD-206	1165.8	975.8	1.01	0.59	1.38			
00-DD-208	1165.1	1014.9	1.36	0.23	1.89	1.4	0.64	1.7
00-DD-209	1169.6	989.6	0.81	0.46	1.33	1.79	0.39	1.33
00-DD-210	1182.3	982.3	0.51	0.4	1.35			
00-DD-212	1181.5	1026.5	1	1.71	2.77			
00-DD-213	1158.3	1013.3	No Response to Pumping			No Response to Pumping		
00-DD-214	1165.5	995.5	0.88	6.71	3.22			
00-DD-216	1172.6	1027.6				1.7	0.74	1.49
00-DD-217	1165.6	1015.6	No Response to Pumping			No Response to Pumping		
00-DD-218	1165.8	1015.8	No Response to Pumping			0.12	0.21	0.73
01-DD-223	1145.9	1014.5				0.73	0.1	1.55
01-DD-224	1149	1027.5				0.16	0.14	0.23
01-DD-230	1140.7	1063				1.57	0.18	1.71

Appendix B

EXPLORATORY BORING LOGS

DRILLING LOG	DIVISION NPD	INSTALLATION NPS	SHEET 1 OF 2 SHEETS

1. PROJECT: HHD Fish Passage Study
2. LOCATION (Coordinates or Station): N 102,291.016 E 1,763,737.800
3. DRILLING AGENCY: Ruen Drilling (Clark Fork, Idaho)
4. HOLE NO. (As shown on drawing title and file number): 94-DD-80
5. NAME OF DRILLER: LYLE BALLINGER
6. DIRECTION OF HOLE: [X] VERTICAL [ ] INCLINED _____ DEG. FROM VERT.
7. THICKNESS OF OVERBURDEN: 8.4 FT.
8. DEPTH DRILLED INTO ROCK: 156.6 FT.
9. TOTAL DEPTH OF HOLE: 165.0 FT.
10. SIZE AND TYPE OF BIT: NWC3 Wireline
11. DATUM FOR ELEVATION SHOWN (TBM or MSL): NGVD 1929
12. MANUFACTURER'S DESIGNATION OF DRILL: Longyear 44
13. TOTAL NO. OF OVER-BURDEN SAMPLES TAKEN: DISTURBED -; UNDISTURBED -
14. TOTAL NUMBER CORE BOXES: 12
15. ELEVATION GROUND WATER: 1153.8
16. DATE HOLE: STARTED 4/5/94; COMPLETED 4/8/94
17. ELEVATION TOP OF HOLE: 1164.767
18. TOTAL CORE RECOVERY FOR BORING: 98.3%
19. SIGNATURE OF INSPECTOR:

ELEVATION a	DEPTH b	LEGEND c	CLASSIFICATION OF MATERIALS (Description) d	% CORE RECOVERY 0 e 100	BOX OR SAMPLE NO. f	REMARKS (Drilling time, water loss, depth of weathering, etc., if significant) g
1164.8			GM, Silty Sandy GRAVEL with boulders.			NWC3 - OD = 2.980" ID = 1.875" SPLIT INNER TUBE 4/5/94
				RQD %		
1156.4			TOP OF ROCK @ 8.4 FT			
	10		ANDESITE, soft, weathered, rusty-red to gray in color.	75.0	A	4/6/94
1153.8				80.8	B	
1149.8			ANDESITE BRECCIA, moderately hard, dense, weathered, rusty-red.	96.1	C	1 — 40 psig/6.7 gpm/15 min 40-21/5 sec 21-7/120 sec.
	20			100	D	
1139.7			Color change to gray-green	84.4	E	
	30			98.4	F	2 — 40 psig/15.5 gpm/15 min 40-17/5 sec 17-4/120 sec.
				100	G	
	40			80.0	H	
				84.4	I	3 — 40 psig/8.1 gpm/15 min 40-22/5 sec 22-8/120 sec.
	50		From 47.4 to 57 core is soft, slicken sides on joints 47.4 to 48.4 clay gouge, soft, gray	64.5	J	4/6/94
				77.8	K	4/7/94
1107.7			ANDESITE BRECCIA, moderately hard, dense, dark gray to black	88.3	L	4 — 80 psig/8.0 gpm/15 min 80-58/5 sec 58-33/120 sec.
	60			90.0	M	
				97.0	N	
1091.9	70			87.6	O	5 — 80 psig/9.7 gpm/15 min 80-47/5 sec 47-13/120 sec.
			Color change to light gray-green @ 71.0', with slickensides on joints; 75.0' to 76.0', clayey gouge.	86.1	P	
	80			88.0	Q	
				98.4	R	6 — 80 psig/1.5 gpm/15 min 80-25/5 sec 25-0/120 sec.
				92.0	S	
	90			98.4	T	
				90.0	U	7 — 80 psig/0 gpm/15 min 80-49/5 sec 49-21/120 sec.
1064.8	100					

DRILLING LOG (Cont Sheet)

ELEVATION TOP OF HOLE 1164.76

Hole No. 94-DD-80

PROJECT HHD Fish Passage Study

INSTALLATION

SHEET 2 OF 2 SHEETS

ELEVATION a	DEPTH b	LEGEND c	CLASSIFICATION OF MATERIALS (Description) d	% CORE RECOVERY e	BOX OR SAMPLE NO. f	REMARKS (Drilling time, water loss, depth of weathering, etc., if significant) g
1064.8	100		ANDESITE BRECCIA, soft to hard, green to gray, slickensides on joint surfaces.	65.8	V	
					7	
	105			50.0	W	4/7/94
				93.2	X	80 psig/0 gpm/15 min 80-40/5 sec 40-19/120 sec.
	110				8	
				100	Y	
	115			100	Z	
						80 psig/0 gpm/15 min 80-43/5 sec 43-21/120 sec.
	120			96.6	AA	
				100	AB 9	
	125					
				91.2	AC	80 psig/0 gpm/15 min 80-70/5 sec 70-50/120 sec.
	130					
			NPD laboratory test, conducted on core 139.3 - 140.3'. Results reported 7/13/94: Specific Gravity 2.42 unit Weight 150.8 pcf Absorption 6.6% Unconfined Compressive Strength = 5,410 psi	100	AD	
	135					
				100	AE 10	
	140					
				51	AF	
1020.4	145					
			ANDESITE BRECCIA, clayey, soft, altered gray to green, slickensides on joints.			80 psig/5.3 gpm/ 80-75/5 sec 75-60/120 sec.
	150			62.5	AG	
					11	
	155			77.1	AH	
	160			86.2	AI 12	80 psig/5.7 gpm/ 80-70/5 sec 70-51/120 sec.
			hard @ 163 ft	94.8	AJ	4/8/94
999.8	165		Bottom of boring @ 165 ft			

NOTE: Ruen Drilling Company is subcontractor to Andrew Drilling Co., Idaho Falls, Idaho under contrat DACA 67-93-D-1012 Delivery Order No. 9

*NOTE

Water test data corresponds to interval shown.

Abbreviations used:
80 psig/9.7 gpm/15 min
80-40/5 sec
40-19/120 sec

80 psig = 80 pounds water pressure per inch measaured by a gauge at ground level

9.7 gpm/15 min = 9.7 gallons of water per minute measured with a flow meter for the stated period

80-40 /5sec = water pressre drop in system from 80 to 40 psig in 5 seconds.

40-19/120 sec = water pressure drop in system from 40 to 19 psig in 2 minutes

DRILLING LOG	DIVISION NPD	INSTALLATION NPS	SHEET 1 OF 2 SHEETS

1. PROJECT HHD FISH PASSAGE STUDY	10. SIZE AND TYPE OF BIT NWC3 (WIRELINE)
2. LOCATION (Coordinates or Station) N 102,503,562 E 1,763,228.777	11. DATUM FOR ELEVATION SHOWN (TBM or MSL) NGVD 1929
3. DRILLING AGENCY RUEN DRILLING (CLARK FORK, IDAHO)	12. MANUFACTURER'S DESIGNATION OF DRILL LONGYEAR 44
4. HOLE NO. (As shown on drawing title and file number) 94-DD-81	13. TOTAL NO. OF OVER-BURDEN SAMPLES TAKEN: DISTURBED –, UNDISTURBED –
5. NAME OF DRILLER LYLE BALLINGER	14. TOTAL NUMBER CORE BOXES 13
6. DIRECTION OF HOLE ☒ VERTICAL ☐ INCLINED _____ DEG. FROM VERT.	15. ELEVATION GROUND WATER 1189.7
7. THICKNESS OF OVERBURDEN 23.0 FT.	16. DATE HOLE STARTED 4/21/94 COMPLETED 4/234/94
8. DEPTH DRILLED INTO ROCK 167.0 FT.	17. ELEVATION TOP OF HOLE 1220.307
9. TOTAL DEPTH OF HOLE 190.0 FT.	18. TOTAL CORE RECOVERY FOR BORING 99 %
	19. SIGNATURE OF INSPECTOR

ELEVATION a	DEPTH b	LEGEND c	CLASSIFICATION OF MATERIALS (Description) d	% CORE RECOVERY e	BOX OR SAMPLE NO. f	REMARKS (Drilling time, water loss, depth of weathering, etc., if significant) g
1220.3			GM, Silty sandy gravel			
	10					
	20		Top of rock @ 23.0 ft	RQD %		Legend for joint spacing: widely >1.5 ft; moderately 0.5 to 1.5 ft; closely 0.1 to 0.5 ft; highly fractured=brecciated
1197.3				87	A	
			ANDESITE BRECCIA: Altered dark green to gray, soft zones, calcite	89	B	1
1189.7 ▼	30		FeO	91	C	
				97	D	
	40			96	E	2
				100	F	
	50			91	G	
				88	H	3
	60			92	I	4/21/94 SWL 23.6 bgs
				100	J	4/22/94 7.1 bgs 4
	70			96	K	
				96	L	
	80			100	M	5
				86	N	
	90			100	O	
			Clayey Joints	96	P	
1126.5						
			ANDESITE BRECCIA, altered FeO, Pyrite, CaCo on joints			6
1120.3	100			91	Q	

DRILLING LOG (Cont Sheet)

ELEVATION TOP OF HOLE: 1220.307

Hole No. 94-DD-81

PROJECT: HHD FISH PASSAGE

INSTALLATION: NPS

SHEET 2 OF 2 SHEETS

ELEVATION a	DEPTH b	LEGEND c	CLASSIFICATION OF MATERIALS (Description) d	% CORE RECOVERY 0 ●100	BOX OR SAMPLE NO. f	REMARKS (Drilling time, water loss, depth of weathering, etc., if significant) g
1120.3	100		ANDESITE BREDCCIA, altered, clayey zones, ,FeO, Pyrite, Calcite, slickensides.	RQD % 84	R 6	
				88	S 7	
	110			100	T	
				100	U	
	120			100	V 8	SEE NOTE ON SHEET 2 LOG 94-DD-80
				94	W	
	130		● 130' Slickensides on joint surfaces	71	X	80 psi/0 gpm/15 min 80-61 psi/120 sec
				89	Y 9	
	140			88	Z	
				100	AA	80 psi/27.8 gpm/13.5 min 80-0 psi/5 sec
	150			71	AB 10	
1065.3				61	AC	
			ANDESITE BRECCIA, highly altered, intact	60	AD	80 psi/30.7 gpm/15 min 80-0 psi/5 sec
	160				11	
1054.1				88	AE	
			ANDESITE BRECCIA, altered - soft, broken, discolored, local, clay, FeO, Calcite	74	AF	
	170			74	AG	80 psi/25.7 gpm/15 min 80-17 psi/5 sec 17 - 0 psi /60 sec
				98	AH 12	
	180			98	AI	80 psi /12.9 gpm/15min 80-40 psi/5 sec 40-13psi/120 sec
				91	AJ 13	
1030.3	190			100	AK	
			Bottom of boring at 190.0'			
			NPD lab results 7/13/94 conducted on core 175.2-175.8			
			Sp. Gravity 2.61 Unit Weight 162.6 pcf Absorption 2.0% Unconfined CompStr 8,790 psi			
			Conducted on core 187.5 - 188.0 Sp. Gravity 2.65 Unit Weight 165.1 pcf Absorption 1.6% Unconfined CompStr 9,170 psi			NOTES: End of shift 4/22 cored to 170.1 SWL 23.8' Began Shift 4/23 SWL 30.6'

DRILLING LOG

DIVISION: NPD

INSTALLATION: SEATLE DISTRICT

SHEET 1 OF 3 SHEETS

1. PROJECT: HOWARD HANSEN DAM INTAKE TOWER
2. LOCATION (Coordinates or Station): N102,508.19 E 1,763,518.22
3. DRILLING AGENCY: KERR DRILLING CO.
4. HOLE NO. (As shown on drawing title and file number): 94-DD-85
5. NAME OF DRILLER: RANDY PAINTER
6. DIRECTION OF HOLE: VERTICAL ☒ INCLINED ☐ _____ DEG. FROM VERT
7. THICKNESS OF OVERBURDEN 2.0
8. DEPTH DRILLED INTO ROCK 54.0
9. TOTAL DEPTH OF HOLE 56
10. SIZE AND TYPE OF BIT HQ DIAMOND
11. DATUM FOR ELEVATION SHOWN (TBM OR MSL): NGVD 1929
12. MANUFACTURER'S DESIGNATION OF DRILL: MOBILE B-53
13. TOTAL NO. OF OVER-BURDEN SAMPLES TAKEN: DISTURBED 0; UNDISTURBED 0
14. TOTAL NUMBER CORE BOXES 6
15. ELEVATION GROUND WATER 1133
16. DATE HOLE: STARTED 09-18-94; COMPLETED 09-20-94
17. ELEVATION TOP OF HOLE 1140.1
18. TOTAL CORE RECOVERY FOR BORING 96
19. SIGNATURE OF INSPECTOR

ELEVATION a	DEPTH b	LEGEND c	CLASSIFICATION OF MATERIALS (Description) d	% CORE RECOVERY e	BOX OR SAMPLE NO. f	REMARKS (Drilling time, water loss, depth of weathering, etc. if significant) g
1140.1	0		ROCK FILL	63	1	RUN A TO 4.0' D 4.0: C2.5: L1.5 RQD 12. 5%
1138.1	2.0		ANDESITE,breccia, gray,hard broken w/qtz and pyrite mineralization			
1137.1	3.0		high angle joint 70 degree 3.5 to 4.9 ft broken zone	100		RUN B TO 6.0' D 2.0: C 2.0: L 0.0 RQD 55 %
1135.2	4.9			100		RUN C TO 11.0' D 5.0:C 5.0:L 0 RQD 85% w.t. 9/18 9/19
			50 degree 45 degree 40 degree 65 degree, pyrite mineralizaton, some slickensides 45 degree			
1130.1	10		ANDESITE, breccia, hard 70 degree, pyrite fill flat joint, fresh hard rock	100	1 2	BOX 1 Fm 0.0 to 11.0' RUN D TO 16.0 D5.0:C5.0:L0.0 RQD 96%
			10 degree 45 degree 30 degree			
1124.1	16.0		broken zone to 18 ft. 20 degree group of 3	90		RUN E TO 21.0 D5.0:C4.5:L0.5 RQD 63%
1123.1	17		Andesite lapallie tuff,			

DRILLING LOG (Cont Sheet) | ELEVATION TOP OF HOLE 1140.1 | **Hole No.** 94-DD-85

1. PROJECT HOWARD HANSEN DAM INTAKE TOWER | INSTALLATION SEATLE DISTRICT | SHEET 2 OF 3 SHEETS

ELEVATION a	DEPTH b	LEGEND c	CLASSIFICATION OF MATERIALS (Description) d	% CORE RECOVERY e	BOX OR SAMPLE NO. f	REMARKS (Drilling time, water loss, depth of weathering, etc. if significant) g
			30 degree thin calcite crust rock is crumbly			
			30 degree,calcite fill			lost return water, water exiting slope drain at elev 1132 ft.
			60 degree, calcite			
1120.1	20		35 degree, thick calcite infill, crumbly rock		2	
			Andesite, brecia, gray,hard		-----	BOX 2 Fm 11.0 TO 21 FT
			45 degree	100	3	RUN F TO 26.0' D5.0:C5.0:L0.0 RQD 60%
			70 degree			
			22.4 to 24.0 ft, broken zone			
			flat joint			RUN G TO 31.0'
			26.3 to 26.8 ft., broken zone	100		D5.0:C5.0:L0.0 RQD 86%
			5 degree			
			27.8 to 28.4 ft., broken zone			
			10 degree			
			30 degree, some slickensides			
1110.1	30.00		Andesite, breccia, gray, hard		3	
			5 degree, several close fractures		-----	BOX 3 TO 30.6'
			35 degree		4	RUN H TO 36.0'
			same	100		D5.0:C5.0:L0.0 RQD 96%
			5 degree			
			6 & 20 degree			
			5 degree, minor calcite			
			soft zone			
			50 degree, soft infill			
			35.9 to 36.7 ft.,broken, crumbly rock, slicks present			RUN I TO 41.0' D5.0:C5.0:L0.0 RQD 80%
			50 degree, pyrite, qtz infill	100	4	
					-----	BOX 4 Fm 30.6 To 39.6 FT.
1100.1	40.0		30 degree, soft		5	

DRILLING LOG (Cont Sheet) | ELEVATION TOP OF HOLE 1140.1 | **Hole No.** 94-DD-85

1. PROJECT HOWARD HANSEN DAM INTAKE TOWER | INSTALLATION SEATLE DISTRICT | SHEET 3 OF 3 SHEETS

ELEVATION a	DEPTH b	LEGEND c	CLASSIFICATION OF MATERIALS (Description) d	% CORE RECOVERY e	BOX OR SAMPLE NO. f	REMARKS (Drilling time, water loss, depth of weathering, etc. if significant) g
1099.6	40.5		40.5 to 42.0 ft., broken zone, rock is soft, crumbly with silickensides			RUN J TO 46.0' D5.0:C5.0:L0.0 RQD 90%
1098.1	42		Andesite Lapallie tuff, hardcompetent rock 30 degree, Qtz, pyrite soft infill	100		
			30 degree		5	
				100	-----	BOX 5 Fm 39.6 To 48.5 FT.
1090.1	50				6	
			30 degree			RUN L TO 56.0 D5.0:C5.0:L0.0 RQD 84%
			40 degree	100		
			shallow joint set			
			30 & 35 degree conjugate set			
			40 degree, slight broken zone			
			20 degree		6	
1084.1	56.0		btm of hole@ 56 ft.		-----	BOX 6 Fm 48.5 To 56.0 FT.

DRILLING LOG

DIVISION: NPD

INSTALLATION: SEATLE DISTRICT

SHEET 1 OF 3 SHEETS

1. PROJECT: HOWARD HANSEN DAM INTAKE TOWER
2. LOCATION (Coordinates or Station): N102,525.236 E1,763496.572
3. DRILLING AGENCY: KERR DRILLING CO.
4. HOLE NO. (As shown on drawing title and file number): 94-DD-86
5. NAME OF DRILLER: R. PAINTER
6. DIRECTION OF HOLE: VERTICAL ☒ INCLINED ☐ _____ DEG. FROM VERT
7. THICKNESS OF OVERBURDEN: 2.6
8. DEPTH DRILLED INTO ROCK: 38.4
9. TOTAL DEPTH OF HOLE: 41.1
10. SIZE AND TYPE OF BIT: 6" DIAMOND
11. DATUM FOR ELEVATION SHOWN (TBM OR MSL): NGVD 1929
12. MANUFACTURER'S DESIGNATION OF DRILL: MOBILE B-53
13. TOTAL NO. OF OVER-BURDEN SAMPLES TAKEN: DISTURBED 0; UNDISTURBED 0
14. TOTAL NUMBER CORE BOXES: 6
15. ELEVATION GROUND WATER: 1146.3
16. DATE HOLE: STARTED 09/16/94; COMPLETED 09/17/94
17. ELEVATION TOP OF HOLE: 1159.7
18. TOTAL CORE RECOVERY FOR BORING: 92
19. SIGNATURE OF INSPECTOR:

ELEVATION a	DEPTH b	LEGEND c	CLASSIFICATION OF MATERIALS (Description) d	% CORE RECOVERY e	BOX OR SAMPLE NO. f	REMARKS (Drilling time, water loss, depth of weathering, etc. if significant) g
1159.7	0		CONCRETE	66	1	RUN A TO 3.0' D3.0:C2.0:L1.0:RQD N/A Initial advance w/HQ bit
1157.7	2.0		SUBGRADE,(1/4"-) gravels			
1157.1	2.6		ANDESITE, gray-green,Mod.hard core highly broken,crumbly			RUN B TO 6.5' D3.5:C2.5:L1.0 RQD 0%
			crumbly	71		Return water leaking to pool in subsurface
			rock highly broken vertical joint w/slickensides 40 degrees 20 degrees 70 degrees	100		RUN C TO 8.0' D1.5:C1.5:L0 RQD 25% reamed HQ pilot hole to 6" dia for next run.
				72		RUN D T0 13.0 D5.0:C3.6:L1.4 RQD 19 % water return 80% 0-
					1	BOX 1 FM 0.0 TO 9.7 FT.
1149.7	10		ANDESITE,gray,hard calcite infill, soft, highly broken to 15.1 Ft. 0 degres		2	
			watertable flat jointed	100		RUN E TO 18.0' D5.0:C5.0:L0 RQD 54% w.t 9/17
1144.6	15.1		Andesite, gray,hard 10 degree			
			flat joint		2	
			45 degree joint			BOX 2 Fm 9.7'To 17.0'

DRILLING LOG (Cont Sheet) | ELEVATION TOP OF HOLE 1159.7 | **Hole No.** 94-DD-86

1. PROJECT HOWARD HANSEN DAM INTAKE TOWER | INSTALLATION SEATLE DISTRICT | SHEET 2 OF 3 SHEETS

ELEVATION a	DEPTH b	LEGEND c	CLASSIFICATION OF MATERIALS (Description) d	% CORE RECOVERY e	BOX OR SAMPLE NO. f	REMARKS (Drilling time, water loss, depth of weathering, etc. if significant) g
					3	
1141.7	18.0		ANDESITE BRECCIA,gray,amgdules pink/maroon	100		RUN F TO 23.0' D5.0:C5.0:10 RQD 64%
			broken, crumbly,soft breccia. 1/8 to 4 " pieces. Pyrite and calcite		3	
1138.7	21		highly breciated and broken to 23 ft.		-----	BOX 3 Fm 17.0' To 22.5'
1136.7	23.0		40 degree	100	4	RUN G TO 28.0 D 5.0:C5.0:L0 RQD 86%
			70 degree rehealed fracture, qts filling			
			70 degree dark coating			
			flat pocket of qtz			
			50 degree		4	
			soft zone 90 degree, qts infill 30 degree, Qtz. and pyrite mineralizaton	100	----- 5	BOX 4 Fm 22.5' To 28.0' RUN H TO 34.5 D 6.5:C 6.5:L 0 RQD 28%
			40 degree, thin qtz infill			
1129.7	30		Andesite, breccia, hard broken, crumbly, soft clayey grouge high angle jointing			
			high angle jointing			
			high angle jointing		5	
			broken zone 1 to 2" pieces		-----	BOX 5 To 34.5 FT. RUN I TO 41.0' D 6.5:C6.5:L0.0 RQD 20%
			high angle and flat jnt.	100	6	
1123.7	36.0		clay gouge zone, clay, grey,soft			
1122.2	37.5		Andesite breccia, hard			
1121.3	38.4		60 degree, broken to 38.5 ft. Andesite, lapillie tuff			
			70 degree		6	

DRILLING LOG (Cont Sheet)	ELEVATION TOP OF HOLE 1159.7	Hole No. 94-DD-86
1. PROJECT HOWARD HANSEN DAM INTAKE TOWER	INSTALLATION SEATLE DISTRICT	SHEET 3 OF 3 SHEETS

ELEVATION a	DEPTH b	LEGEND c	CLASSIFICATION OF MATERIALS (Description) d	% CORE RECOVERY e	BOX OR SAMPLE NO. f	REMARKS (Drilling time, water loss, depth of weathering, etc. if significant) g
			40-41 ft. high angle joint zone rock highly broken		-----	BOX 6 TO 41.0 ft.
1118.6	41.1		BTM of HOLE			

DRILLING LOG	DIVISION NPD	INSTALLATION NPS	SHEET 1 OF 2 SHEETS

1. PROJECT: HHD FISH PASSAGE STUDY
2. LOCATION (Coordinates or Station): N102,462 E1,763,470 (TOPO)
3. DRILLING AGENCY: JOHNSON DRILLING for R&R DRILLING
4. HOLE NO. (As shown on drawing title and file number): 96-DD-87
5. NAME OF DRILLER: BOB JOHNSON
6. DIRECTION OF HOLE: [X] VERTICAL [ ] INCLINED _____ DEG. FROM VERT.
7. THICKNESS OF OVERBURDEN: 1.0'
8. DEPTH DRILLED INTO ROCK: 199.8'
9. TOTAL DEPTH OF HOLE: 200.8'
10. SIZE AND TYPE OF BIT: HQ WIRELINE
11. DATUM FOR ELEVATION SHOWN (TBM or MSL):
12. MANUFACTURER'S DESIGNATION OF DRILL: JOY 22
13. TOTAL NO. OF OVER-BURDEN SAMPLES TAKEN: DISTURBED N/A; UNDISTURBED N/A
14. TOTAL NUMBER CORE BOXES: 20
15. ELEVATION GROUND WATER: FLOWING ARTESIAN
16. DATE HOLE: STARTED 29 APR 96; COMPLETED 3 MAY 96
17. ELEVATION TOP OF HOLE: 1165.7
18. TOTAL CORE RECOVERY FOR BORING: 99.9 %
19. SIGNATURE OF INSPECTOR: RICHARD ECKERLIN

ELEVATION a	DEPTH b	LEGEND c	CLASSIFICATION OF MATERIALS (Description) d	RQD e	RUN/ BOX f	REMARKS (Drilling time, water loss, depth of weathering, etc., if significant) g
1165.7			GM: Silty Sandy Gravel			Drilled to 5.3 in 3 runs, then reamed 4"-I.D. (HW) casing to 4.8'. Removed 4" casing and took off diamond reaming shoe, then set back in hole so that top is 3" bgs. Top is threaded for cap.
1164.7			TOP OF ROCK ANDESITE BRECCIA, mod hard to hard, black to green to reddish green, closely to widely fractured	0	A	
				0	B	
				100	C 1	
			80°, with calcite	35	D	
			55°	35	E	
	10					
			35°, FeO, water course (12.8-13.0)	61	F	
1152.9			50°, FeO			
			75°, FeO, Calcite at 16' vesicules filled with zeolites to 1/8" dia.	71	G 2	11 — 27 gpm/10 minutes 15 - 0 psi/instantaneous
			55°			
1145.4	20		75°			
			75°, possible water course (20.3)	77	H	
			FeO, silt	70	I 3	
			FeO			
			Green Gouge, pyrite vein, calcite	84	J	10 — 26.1 gpm/10 minutes 20 - 2 psi/30 sec
	30			100	K	
			34-38' Core is mottled red, green black with calcite, vesicules filled with zeolites (1/8")		4	
			at 37' chlorite on jt., fault gouge	90	L	
	40		75° traces, 50°			
			intensely fractured 39.8-43.8'	0	M	9 — 0.23 gpm/10 minutes 52 - 20 psi/2 min
				57	N 5	
				96	O	
	50		45°			8 — 0.19 gpm/10 minutes 50 - 20 psi/2 min
			45°	44	P	4/30 1730
			0.2' loss			5/1 0700 SWL 18.5' bgs
			25°	96	Q 6	
	60					
			25°	100	R	7 — 0.58 gpm/10 minutes 52 - 14 psi/2 min
			55° 55°, 60°	100	S	
			65°			
			45°	96	T 7	
			No joints 67.3-85.2'			
	70					
				100	U	6 — 0.65 gpm/10 minutes 55 - 16 psi/2 min
				100	V 8	
	80					
				96	W	5 — 2.4 gpm/10 minutes 65 - 40 psi/2 min
			40°		9	
1078.8			FeO Taking Jt, Water Course	98	X	
	90					
			30°, FeO, Clay	98	Y	4 — 3.1 gpm/10 minutes 64 - 36 psi/2 min
			40°		10	
			30°, FeO			3
			65°	96	Z	
1065.7	100		15°			

DRILLING LOG (Cont Sheet) | ELEVATION TOP OF HOLE 1165.7 | Hole No. 96-DD-87

PROJECT HHD FISH PASSAGE STUDY | INSTALLATION NPS | SHEET 2 OF 2 SHEETS

ELEVATION a	DEPTH b	LEGEND c	CLASSIFICATION OF MATERIALS (Description) d	RQD e	RUN/ BOX f	REMARKS (Drilling time, water loss, depth of weathering, etc., if significant) g
1065.7	100		ANDESITE BRECCIA, moderately hard to hard, black to green to reddish green, medium to widely fractured		Z	
				100	AA	2.6 gpm/5 mi. 50 - 10 psi/2 min
					11	
			20°	81	AB	
	110			100	AC	1.1 gpm/5 mi. 45 - 10 psi/2 min
			50°		12	
				96	AD	
	120					5/1 1730 SWL 9.0 bgs
			75°			SWL 14.5 bgs 5/2 0700
1040.0				96	AE	
			35°		13	1.3 gpm/5 mi. 45 - 12 psi/2 min
			45°	100	AF	
	130		65°			
			50°			
			45°	100	AG	
1030.0					14	BASE OF PROPOSED EXCAVATION
						At 137' Set Grout Packer
	140		35°	100	AH	
1022.9			35° FeO, Water Course at 142.8			
1022.0			30°, 35°, FeO Artesian Zone 143.4-143.7			On 8 May, grouted hole 137-200 ± using 10 sacks cement grout.
			60°	82	AI	
					15	
			40°	76	AJ	
	150		30°			
			30°	76	AK	
			30°			
			45°			
1009.8			155.9-156.4 Fault			
			at 156.1 green gauge on jt., pyrite vein	92	AL	
					16	
	160		70°	100	AM	
			65°			
			85°	33	AN	
					17	
	170		65°	78	AO	
			65°			
			35°			
			0° at 174.5' possibly fault			
			55°	100	AP	
					18	
			40°, 45°			
	180		45°			
				75	AQ	
						5/2 1730 Artesian 40 gpm
				68	AR	5/3 0700 Artesian Pool 40° F, Artesian 48° F
			50°		19	
			45°			
			35°			
	190		0°	94	AS	
			20°			
				81	AT	
					20	
				96	AU	
964.9	200		Bottom of Hole at 200.8'			

LEGEND FOR JOINT SPACING

Widely	=	>1.5 ft
Moderately	=	0.5 to 1.5 ft
Closely	=	0.1 to 0.5 ft
Highly Fractured	=	brecciated

Hole Number: 99-DD-200

DRILLING LOG

DIVISION: CENWS

INSTALLATION: Seattle District

SHEET 1 OF 2 SHEETS

1. PROJECT: Howard Hanson Dam Fish Bypass
2. LOCATION (Coordinates or Station): N 102,355.160; E 1,763,524.632 — Howard Hanson Dam, Green River, WA
3. DRILLING AGENCY: Ruen Drilling
4. HOLE NO. (As shown on drawing title and file number): 99-DD-200
5. NAME OF DRILLER: Ben Goody
6. DIRECTION OF HOLE: ☐ VERTICAL ☒ INCLINED 14° ~N10°W DEG. FROM VERT.
7. THICKNESS OF OVERBURDEN: 14.6'
8. DEPTH DRILLED INTO ROCK: 197.0'
9. TOTAL DEPTH OF HOLE: 211.6'
10. SIZE AND TYPE OF BIT: Longyear Series 2 (3.782")
11. DATUM FOR ELEVATION SHOWN (TBM or MSL): Horizontal NAD27 (N. Zone) Vertical NGVD 29
12. MANUFACTURER'S DESIGNATION OF DRILL: Longyear LF 70
13. TOTAL NO. OF OVER-BURDEN SAMPLES TAKEN: DISTURBED --; UNDISTURBED --
14. TOTAL NUMBER CORE BOXES: 19
15. ELEVATION GROUND WATER: Artesian ~
16. DATE HOLE: STARTED 16 July 1999; COMPLETED 19 July 1999
17. ELEVATION TOP OF HOLE: 1,164.54 TOC
18. TOTAL CORE RECOVERY FOR BORING: 99 %
19. SIGNATURE OF INSPECTOR: Brenda Garcia

ELEVATION (a)	DEPTH (b)	LEGEND (c)	CLASSIFICATION OF MATERIALS (Description) (d)	% CORE RECOVERY (e)	RQD (e)	RUN/BOX I.D. (f)	REMARKS (Drilling time, water loss, depth of weathering, etc., if significant) (g)
1,164.54			GP: Gravel (angular to sub-rounded) w/cobbles & sand, medium dense, varied-colored				Ground Surface (G.S.) 1,163.740' on shoulder of road.
							Coring was started @ 3'. No samples of overburden were recovered.
	10						
1,150.4			@ 14.6': BEDROCK				Elevation of groundwater is flowing artesian @ hole collar.
			ANDESITE BRECCIA: moderately weathered, moderately soft to hard, gray	100	0	A	
			Shear zone w/iron	91	43	B	Boring consistently maintains 14° off vertical inclination from 0 to 211.6' per Norcal Borehole Deviation log.
	20		W/clay; ANDESITE BRECCIA: sl. weathered to unweathered, moderately fractured, moderately hard to hard, gray to gray-green				
			W/clay	100	82	C	
			W/slicks				
			@ 27', zone w/soft areas; washed out	100	65	D	
	30		@ 32-35', vertical fracturing; trace clay	100	31	E	
			W/iron staining				
			W/iron	98	67	F	12 — 2.4 g.p.m./8 min. 46 - 32 p.s.i./2 min.
	40		@ 41-44.5', green clay inclusions	100	100	G	
			W/gray clay	100	36	H	
			@ 49-58', hard, sl. fractured	100	100	I	
	50			100	98	J	11 — 0 g.p.m./6 min. 53 - 20 p.s.i./2 min.
			@ 57.8', grading to BRECCIA w/reddish-brown inclusions & some minor gray inclusions, sl. fractured, sl. weathered to unweathered, moderately hard, green				
	60		Tr. clay	100	100	K	
				100	94	L	
	70			100	85	M	10 — 0 g.p.m./3 min. 50 - 45 p.s.i./2 min.
			Shear zone w/iron staining				
				100	100	N	
	80			100	100	O	
				100	100	P	9 — 0 g.p.m./5 min. 55 - 39 p.s.i./2 min.
	90		W/iron staining	88	69	Q	
				98	98	R	
1,067.5	100			100	82	S	8 — 0.1 g.p.m./10 min. 52 - 35 p.s.i./2 min.

BOX 1 | BOX 2 | BOX 3 | BOX 4 | BOX 5 | BOX 6 | BOX 7 | BOX 8

DESIGN FILE: J:#cwehh#geotech#hh99dd200logs.dgn
DATE AND TIME PLOTTED: 05-JUN-2000 10:47

DRILLING LOG (Cont Sheet) | ELEVATION TOP OF HOLE 1,164.54 TOC | Hole No. 99-DD-200

PROJECT: Howard Hanson Dam Fish Bypass | INSTALLATION: Seattle District | SHEET 2 OF 2 SHEETS

ELEVATION a	DEPTH b	LEGEND c	CLASSIFICATION OF MATERIALS (Description) d	% CORE RECOVERY / RQD e: CORE RECOV.	RQD	RUN/BOX I.D. f	REMARKS (Drilling time, water loss, depth of weathering, etc., if significant) g
1,067.5			W/iron staining @ 101', graded v. heavy, dkr. gray-green. @ 104', ANDESITE, moderately fractured, sl. weathered to unweathered, hard, dk. gray	100	90	T	BOX 9
			Healed fractures W/quartz W/clay Pyrite, iron st. W/iron W/iron, clay	100	88	U	
	110		W/iron @ 110.5', BRECCIA, moderately hard, gray-green	94	88	V	
			W/iron	100	76	W	BOX 10 — 7 — 2.6 g.p.m./5 min. 51 - 5 p.s.i./2 min.
			W/iron @ 115', ANDESITE, hard, dk. gray to black W/iron W/iron				
	120		Steep w/iron	100	33	X	
			W/iron @ 125', ANDESITE BRECCIA, moderately hard to hard, gray to gray-green	100	72	Y	BOX 11
	130			96	56	Z	Water Production Zone — 6 — 24.5 g.p.m./4 min. 64 - 7 p.s.i./5 sec.
1,036.5			@ 131.5-132', internally fractured w/rock frags., iron; shear zone Trace clay W/clay	92	36	AA	
			Rubble zone 0.05' thick w/iron st. @ 138', grades to moderately hard to hard, ltr. gray-green	100	47	AB	BOX 12
	140		Steep				
			@ ~ 144.5', ANDESITE, hard, dk. gray-green to dk. gray	100	71	AC	
				100	100	AD	BOX 13 — 5 — 3.1 g.p.m./7 min. 80 - 31 p.s.i./2 min.
	150		W/sand, iron staining				
1,015.6			Steep w/iron staining	100	93	AE	BOX 14 — Artesian Zone
			Iron staining @ 157.9-159.2', highly fractured w/iron staining	100	55	AF	
	160		W/gray clay				4 — 0.7 g.p.m./7 min. 52 - 8 p.s.i./2 min.
			Steep w/iron staining	100	63	AG	
				100	86	AH	BOX 15
	170		W/pyrite @ 170', BRECCIA, moderately hard to hard, color change to lt. gray				
			Trace clay w/slicks	100	77	AI	3 — 1.6 g.p.m./5 min. 80 - 38 p.s.i./2 min.
			Steep w/slicks				BOX 16
	180			100	85	AJ	
			Steep w/slicks W/slicks @ 183', ANDESITE @ 185', dk. gray	100	82	AK	
			Steep w/gray clay				
				100	92	AL	BOX 17 — 2 — 0 g.p.m./5 min. 82 - 32 p.s.i./2 min.
	190						
			@ 194', lt. gray @ 195', BRECCIA, lt. gray	100	96	AM	
			W/clay, iron staining W/slicks, clay	100	73	AN	BOX 18
	200						
			Sl. fractured (man-made?), friable zone	100	61	AO	BOX 19 — 1 — 0.1 g.p.m./6 min. 80 - 32 p.s.i./2 min.
			Steep w/slicks				
	210			92	65	AP	
959.2			Total Depth: 211.6'			19 Core Boxes	

DESIGN FILE: J:\cow\hh\geotech\hh99dd200logsc.dgn
DATE AND TIME PLOTTED: 05-JUN-2000 10:47

DRILLING LOG	DIVISION CENWS	INSTALLATION Seattle District	SHEET 1 OF 2 SHEETS

1. PROJECT Howard Hanson Dam Fish Bypass	10. SIZE AND TYPE OF BIT Longyear Series 2 (3.782")
2. LOCATION (Coordinates or Station) N 102,354.514; E 1,763,527.354 — Howard Hanson Dam, Green River, WA	11. DATUM FOR ELEVATION SHOWN (TBM or MSL) Horizontal NAD27 (N. Zone) Vertical NGVD 29
3. DRILLING AGENCY Ruen Drilling	12. MANUFACTURER'S DESIGNATION OF DRILL Longyear LF 70
4. HOLE NO. (As shown on drawing title and file number) 99-DD-201	13. TOTAL NO. OF OVER-BURDEN SAMPLES TAKEN — DISTURBED -- — UNDISTURBED --
5. NAME OF DRILLER Ben Goody	14. TOTAL NUMBER CORE BOXES 19
6. DIRECTION OF HOLE ☐ VERTICAL ☒ INCLINED 15° ~N30°E DEG. FROM VERT.	15. ELEVATION GROUND WATER
	16. DATE HOLE — STARTED 20 July 1999 — COMPLETED 22 July 1999
7. THICKNESS OF OVERBURDEN 13.7'	17. ELEVATION TOP OF HOLE 1,164.70 TOC
8. DEPTH DRILLED INTO ROCK 196.6'	18. TOTAL CORE RECOVERY FOR BORING 99+ %
9. TOTAL DEPTH OF HOLE 210.3'	19. SIGNATURE OF INSPECTOR Brenda Garcia

ELEVATION a	DEPTH b	LEGEND c	CLASSIFICATION OF MATERIALS (Description) d	% CORE RECOVERY e	RQD	RUN/BOX I.D. f	REMARKS (Drilling time, water loss, depth of weathering, etc., if significant) g
1,164.7			GP, Gravel w/sand, silt & cobbles, medium dense, varied-colored				Ground Surface (G.S.) 1,163.40' on shoulder of road. Coring was started @ 10'. No samples of overburden were returned.
	10						Boring consistently maintains 15° off vertical inclination from 0 to 210.3' per Norcal Borehole Deviation log.
1,154.29			@ 13.7', top of bedrock				
			ANDESITE BRECCIA, moderately weathered, friable, soft to moderately hard, gray to brown	100	0	A	4" I.D. steel casing to 20' depth.
	20		@ 19.5-21', moderately soft. @ 21-23.5', friable to sl. friable. Sl. weathered to unweathered, moderately fractured, moderately hard, lt. gray	100	43	B	
1,146.7		▼	W.L. @ 23.7' (22 JUL 99)	100	60	C	
				100	87	D	
			W/iron	100	47	E	
	30		W/iron staining				
			@ ~31-35', gray clay inclusions	100	88	F	
			W/iron staining	100	94	G	
			Trace clay, friable				12 — 21.4 g.p.m./5 min. 50 - 8 p.s.i./2 min.
	40		@ ~41-49', gray clay inclusions	100	98	H	
			W/clay				
				100	100	I	Core Runs I, K, M all in one piece
	50		W/gray clay, 0.05' thick	100	96	J	
			Trace clay				
			@ ~53', gray inclusions				
				100	100	K	11 — 1.8 g.p.m./6 min. 48 - 30 p.s.i./2 min.
	60		W/slicks — Coarser-grained w/reddish-brown inclusions, moderately fractured, moderately hard, color change to gray-green	100	90	L	
				100	100	M	
	70		W/slicks	100	77	N	10 — 0.2 g.p.m./6 min. 58 - 52 p.s.i./2 min.
			W/clay				
			W/clay				
			Intensely fractured	100	77	O	
	80			100	100	P	Run P, all in one piece
				100	96	Q	9 — 0.8 g.p.m./6 min. 52 - 30 p.s.i./2 min.
			W/iron staining				
	90		W/pyrite — Breccia changes to hard	100	98	R	
			W/pyrite, clay				
				100	88	S	8 — >23 g.p.m. No pressure could be achieved
1,088.73	100		W/iron				

BOX 1 · BOX 2 · BOX 3 · BOX 4 · BOX 5 · BOX 6 · BOX 7 · BOX 8

DESIGN FILE: J:\cw\hh\geotech\hh99dd2001ogsa.dgn
DATE AND TIME PLOTTED: 05-JUN-2000 10:48

DRILLING LOG (Cont Sheet) | ELEVATION TOP OF HOLE 1,164.70 TOC | Hole No. 99-DD-201

PROJECT: Howard Hanson Dam Fish Bypass | INSTALLATION: Seattle District | SHEET 2 OF 2 SHEETS

ELEVATION a	DEPTH b	LEGEND c	CLASSIFICATION OF MATERIALS (Description) d	% CORE RECOVERY / RQD e: %CORE RECOV.	RQD	RUN/BOX I.D. f	REMARKS (Drilling time, water loss, depth of weathering, etc., if significant) g
1,088.73			W/iron, shear	100	77	T	
			W/iron, rubble				
			ANDESITE, moderate to highly fractured, hard to v. hard, dk. gray, grading to lt. gray W/iron	100	0	U	
			W/iron @ 108.5-110.7'	100	37	V	
	110		Pyrite W/iron				
			Shear, quartz, slicks	100	80	W	>23 g.p.m./4 min. Could not pump high enough to achieve pressure
			W/iron; BRECCIA, moderately hard, lt. gray to dk. gray				
			W/iron, 15.8-117.2' @ ~ 120'	100	19	X	Lost all returns (incl. artesian flow)
	120		W/iron				
			Alternating ANDESITEe & ANDESITE BRECCIA Rock, hard to moderately hard, dk. gray	100	73	Y	
				100	35	Z	
	130		@ 130.7-131', intensely fractured				
			BRECCIA, moderately hard to hard @ 131-132'	100	85	AA	1.8 g.p.m./5 min. 51 - 14 p.s.i./2 min.
			ANDESITE, moderately to highly fractured, hard to v. hard	100	78	AB	
			W/iron staining, steep W/slicks, steep				
	140		Shear w/iron	100	52	AC	
			BRECCIA, moderately fractured, hard to moderately hard, gray-green W/clay	100	73	AD	2.8 g.p.m./8 min. 53 - 24 p.s.i./2 min.
1,051.89			Shear zone w/iron. @ 149-150', shear w/iron staining.				
	150		Highly fractured w/iron	100	37	AE	
			Steep, trace clay W/0.02' clay filling W/iron	100	46	AF	
	160		W/iron W/iron	100	62	AG	2.7 g.p.m./6 min. 60 - 17 p.s.i./2 min.
			W/iron W/iron W/iron W/slicks	100	78	AH	
	170		W/quartz; BRECCIA, moderately fractured, hard to moderately hard, gray-green	100	92	AI	
				97	86	AJ	2 g.p.m./5 min. 70 - 5 p.s.i./2 min.
			Gray clay Pyrite; ANDESITE, moderately to highly fractured, hard	100	84	AK	
	180		W/slicks, clay; BRECCIA, gray				
			Shear; ANDESITE	100	100	AL	
			BRECCIA				
			Intensely fractured	100	92	AM	
	190		W/clay; ANDESITE BRECCIA	100	100	AN	0.4 g.p.m./8 min. 76 - 62 p.s.i./2 min.
				100	100	AO	
	200		Trace iron				
			W/calcite; ANDESITE	100	100	AP	
			BRECCIA	100	83	AQ	0.2 g.p.m./10 min. 75 - 71 p.s.i./2 min.
1004.94	210		Total Depth: 210.3'			19 Core Boxes	

BOX 9, BOX 10, BOX 11, BOX 12, BOX 13, BOX 14, BOX 15, BOX 16, BOX 17, BOX 18, BOX 19

7, 6, 5, 4, 3, 2, 1

DESIGN FILE: J:\fcw\hh\geotech\hh99dd200\logsc.dgn
DATE AND TIME PLOTTED: 05-JUN-2000 10:48

DRILLING LOG	DIVISION CENWS	INSTALLATION Seattle District	SHEET 1 OF 2 SHEETS

1. PROJECT Howard Hanson Dam Fish Bypass	10. SIZE AND TYPE OF BIT Longyear Series 2 (3.782")
2. LOCATION (Coordinates or Station) N 102,333.008; E 1,763,559.528 — Howard Hanson Dam Green River, WA	11. DATUM FOR ELEVATION SHOWN (TBM or MSL) Horizontal NAD27 (N. Zone) Vertical NGVD 29
3. DRILLING AGENCY Ruen Drilling	12. MANUFACTURER'S DESIGNATION OF DRILL Longyear LF 70
4. HOLE NO. (As shown on drawing title and file number) 99-DD-202	13. TOTAL NO. OF OVER-BURDEN SAMPLES TAKEN — DISTURBED -- — UNDISTURBED --
5. NAME OF DRILLER Ben Goody	14. TOTAL NUMBER CORE BOXES 11
6. DIRECTION OF HOLE ☐ VERTICAL ☒ INCLINED 25° ~N23°E DEG. FROM VERT.	15. ELEVATION GROUND WATER --
7. THICKNESS OF OVERBURDEN 21.7'	16. DATE HOLE STARTED 07 July 1999 — COMPLETED 12 July 1999
8. DEPTH DRILLED INTO ROCK 105'	17. ELEVATION TOP OF HOLE 1,164.45
9. TOTAL DEPTH OF HOLE 126.7'	18. TOTAL CORE RECOVERY FOR BORING 99 %
	19. SIGNATURE OF INSPECTOR Brenda Garcia

ELEVATION a	DEPTH b	LEGEND c	CLASSIFICATION OF MATERIALS (Description) d	% CORE RECOVERY e	RQD e	RUN/BOX I.D. f		REMARKS (Drilling time, water loss, depth of weathering, etc., if significant) g
1,164.5			GP, Gravel (angular to subrounded) w/cobbles & sand, medium dense, varied-colored					Ground Surface (G.S.) elevation 1,162.720' on road shoulder:
								Coring was started @ 7'. No samples of overburden were recovered.
	10							Boring inclination maintains 25° from 0 to 59' @ which point it changes to 30° and punches out the canyon wall @ 126.7'.
								No water pressure testing performed.
	20		@ 21.7', top of bedrock					
1,144.8			ANDESITE BRECCIA, unweathered, moderately fractured w/zones of slight to intense fracturing, moderately hard to hard, gray. @ 24.7-28', fractures, typically rough w/clay filling in parts & common iron staining, moderately hard & moderately friable.	100	100	A	BOX 1	
				100	89	B		
	30		W/clay	100	100	C		
			Iron staining	100	66	D	BOX 2	
				100	92	E		
	40		Iron staining	100	76	F		
			@ ~46.5 - 50', red & green mottling	100	80	G	BOX 3	
	50		W/slickensides @ ~50 - 55', gray(er) W/clay	100	80	H		
				100	64	I	BOX 4	
			Trace of orange clay Iron staining	100	39	J		
	60			100	65	K	BOX 5	
			Rock bolt or drainhole	95	86	L		
1,101.1	70		@ 69.6-70.1', 70.5-72.3': thick clay fill, immensely fractured, w/iron staining	100	32	M	BOX 6	Lost drill return water
			W/clay	100	48	N		
			Iron staining @ 76.5-79', pyrite in fractures	97	10	O		
	80		Iron staining	100	30	P	BOX 7	
			@ 83-89', clay inclusions, ltr. gray	100	87	Q		
	90			100	100	R		
				100	63	S	BOX 8	
			@ 97.3-98', iron staining					
1,073.9	100			94	55	T		

DESIGN FILE: J:#cw#hnh#geotech#hh99dd2001ogsa.dgn DATE AND TIME PLOTTED: 05-JUN-2000 10:49

DRILLING LOG (Cont Sheet)

ELEVATION TOP OF HOLE: 1,164.45

Hole No. 99-DD-202

PROJECT: Howard Hanson Dam Fish Bypass

INSTALLATION: Seattle District

SHEET 2 OF 2 SHEETS

ELEVATION a	DEPTH b	LEGEND c	CLASSIFICATION OF MATERIALS (Description) d	% CORE RECOVERY / ROD e: %CORE RECOV.	ROD	RUN/BOX I.D. f		REMARKS (Drilling time, water loss, depth of weathering, etc., if significant) g
1,073.9			W/clay, iron staining Pyrite along W/sand healed fractures Trace iron					
			W/iron	100	95	U	BOX 9	
			∅ ~ 107.5', dkr. gray	100	93	V		
	110		Iron staining					
1,060.7			∅ ~ 114.5', shear zone	100	65	W	BOX 10	
			ANDESITE, w/olivine & pyroxene phenocrysts, unweathered to sl. weathered, hard to v. hard, gray Shear zone Iron staining Calcite	100	62	X		
	120		Filled w/sand, silty sand					
			Trace iron staining	94	67	Y	BOX 11	
1,049.7			Quartz rim	100	50	Z		
			Total Depth: 126.7' Punched out of channel wall into reservoir			Total of 11 core boxes		

DESIGN FILE: J:#cwphh#geotech#hh99dd200logsa.dgn
DATE AND TIME PLOTTED: 05-JUN-2000 10:49

DRILLING LOG

DIVISION: CENWS

INSTALLATION: Seattle District

SHEET 1 OF 2 SHEETS

1. PROJECT: Howard Hanson Dam Fish Bypass
2. LOCATION (Coordinates or Station): N 102,332.667; E 1,763,560.120 — Howard Hanson Dam, Green River, WA
3. DRILLING AGENCY: Ruen Drilling
4. HOLE NO. (As shown on drawing title and file number): 99-DD-203
5. NAME OF DRILLER: Ben Goody
6. DIRECTION OF HOLE: ☐ VERTICAL ☒ INCLINED — 12° ~N30E DEG. FROM VERT.
7. THICKNESS OF OVERBURDEN: 22.3'
8. DEPTH DRILLED INTO ROCK: 163.2'
9. TOTAL DEPTH OF HOLE: 185.5'
10. SIZE AND TYPE OF BIT: Series 2 Longyear 3.782"
11. DATUM FOR ELEVATION SHOWN (TBM or MSL): Horizontal NAD27 (N. Zone) Vertical NGVD 29
12. MANUFACTURER'S DESIGNATION OF DRILL: Longyear LF 70
13. TOTAL NO. OF OVER-BURDEN SAMPLES TAKEN: DISTURBED --; UNDISTURBED --
14. TOTAL NUMBER CORE BOXES: 16
15. ELEVATION GROUND WATER: --
16. DATE HOLE: STARTED 12 July 1999; COMPLETED 14 July 1999
17. ELEVATION TOP OF HOLE: 1,164.610 TOC
18. TOTAL CORE RECOVERY FOR BORING: 96 %
19. SIGNATURE OF INSPECTOR: Brenda Garcia

ELEVATION a	DEPTH b	LEGEND c	CLASSIFICATION OF MATERIALS (Description) d	% CORE RECOVERY e	RQD e	RUN/BOX I.D. f		REMARKS (Drilling time, water loss, depth of weathering, etc., if significant) g
1,164.6			GP, poorly-graded Gravel					Ground Surface (G.S.) elevation 1,164.310' on shoulder of road.
1,156.7		▼	W.L. @ 8.1' (15 JUL 99)					Coring was started @ 7'. Overburden samples viewed, but not retained.
	10		SM, poorly-graded Sand w/silt					Boring consistently maintains 12° off vertical inclination from 0 to 185.5' per Norcal Borehole Deviation log.
			GP-GC, poorly-graded Gravel w/clay					
	20		SP-SW, poorly-graded Sand w/silt					
1,142.8			GP, poorly-graded Gravel @ 22.3' — Top of rock					
			ANDESITE BRECCIA, sl. weathered to unweathered, moderately fractured w/clay inclusions in part & w/clay w/pyrite in part of visible slickensides, moderately hard, lt. toned gray	100	100	A	BOX 1	
				87	80	B		
				98	62	C		
	30		W/slicks					
			Soft zone	100	91	D		Mislatch; no recovery
				--	--	E		
			Clayey zone, soft to medium hard, gray-green	44	22	F	BOX 2	
	40		Small shear zone w/silty sandy clay filling @ ~41.8-49.5', hard	97	82	G		10 — 0 g.p.m./5 min. 50 - 24 p.s.i./1 min.
				100	100	H		
	50			100	100	I	BOX 3	
				100	100	J		9 — 4.6 g.p.m./5 min. 60 - 7 p.s.i./2 min.
	60		W/rubble/iron staining	100	77	K	BOX 4	
			Moderately hard to soft zone, 0.2' thick @ 63.4-64.1', rubble, iron staining @ ~62.5', color change to dk. gray, gray-green	100	71	L		
			Steep angle					
	70		Moderately hard w/soft zones	100	59	M	BOX 5	8 — 0 g.p.m./5 min. 58 - 10 p.s.i./2 min.
			@ 71.8-73.3', highly fractured, appears to be man-made friable zone					
			Trace clay	100	88	N		
			Steep w/slicks					
	80		@ ~79-84', highly angled fractures	--	--	O	BOX 6	
			Trace clay					
			ANDESITE w/abundant healed fractures, hard to v. hard, dk. gray w/slicks	100	72	P		7 — 3 g.p.m./10 min. 59 - 19 p.s.i./2 min.
			@ ~88-89.4', shear zone w/rubble, iron staining & vesicles					
	90			100	44	Q		
			W/slicks & iron @ ~92.5', sl. weathered w/weathered-out phenocrysts	100	54	R	BOX 7	
			Highly fractured w/iron staining					
			Healed shear zone					
			Rubble					
1,066.8	100		Highly fractured	100	67	S		6 — 0 g.p.m./5 min. 60 - 17 p.s.i./2 min.
			Healed breccia zone					

DESIGN FILE: J:\cw\hh\geotech\hh99dd2001logsa.dgn
DATE AND TIME PLOTTED: 05-JUN-2000 10:50

DRILLING LOG (Cont Sheet)

ELEVATION TOP OF HOLE: 1164.610' TOC

Hole No. 99-DD-203

PROJECT: Howard Hanson Dam Fish Bypass

INSTALLATION: Seattle District

SHEET 2 OF 2 SHEETS

ELEVATION a	DEPTH b	LEGEND c	CLASSIFICATION OF MATERIALS (Description) d	% CORE RECOVERY/RQD e: %CORE RECOV.	RQD	RUN/BOX I.D. f		REMARKS (Drilling time, water loss, depth of weathering, etc., if significant) g
1,066.8			ANDESITE BRECCIA: moderately fractured, moderately hard, lt. gray to gray-green. @ 106.5', medium gray Pyrite blebs Clay inclusions Friable w/rubble	100	67	T	BOX 8	
			Soft w/gray clay & sand @ ~108-111', shear zone	100	94	U		
	110		Moderately fractured zone (natural & man-made) @ ~115', vug w/quartz	100	79	V	BOX 9	5 — 0 g.p.m./5 min. 59 - 4 p.s.i./2 min.
				100	100	W		
	120		Shear zone w/clay, pyrite, healed fractures @ 122.7-125.9', finer breccia, ltr. gray Moderately hard to soft, friable	100	67	X	BOX 10	
			W/slicks W/clay	100	100	Y		
	130		W/clay @ ~132-135.4', coarser breccia					4 — 0 g.p.m./5 min. 57 - 28 p.s.i./2 min.
			Friable, rubble	100	94	Z	BOX 11	
			W/rubble, iron staining, sand & gray clay W/clay					
	140		@ ~140', clay inclusion Thin shear zone @ ~141', lt. gray W/slicks	100	63	AA		
			Trace clay @ ~146', dk. gray W/slicks, clay	100	94	AB	BOX 12	3 — 0 g.p.m./5 min. 52 - 23 p.s.i./2 min.
			W/slicks @ ~148', dk. gray to black W/slicks					
	150		@ ~150', sl. to moderately fractured, hard to v. hard	100	100	AC		
			@ 153', coarser breccia; grades from gray to gray-green	100	100	AD	BOX 13	
			W/clay clast missing					
	160		@ 160', grades from v. dk. gray to black	100	86	AE		2 — 0 g.p.m./5 min. 50 - 15 p.s.i./2 min.
				100	100	AF	BOX 14	
			W/quartz Trace clay					
	170		Trace pyrite	100	63	AG		
			W/slicks, quartz	100	94	AH	BOX 15	1 — 0.4 g.p.m./5 min. 52 - 14 p.s.i./2 min.
	180			98	91	AI		
			@ ~183', steep w/slicks, healed fractures	100	74	AJ	BOX 16	
983.2			Total Depth: 185.5'			Total of 16 core boxes		

DESIGN FILE: J:\cw\hh\geotech\hh99dd200logsa.dgn
DATE AND TIME PLOTTED: 05-JUN-2000 10:50

Hole Number: 99-DD-204

DRILLING LOG	DIVISION CENWS	INSTALLATION Seattle District	SHEET 1 OF 2 SHEETS

1. PROJECT Howard Hanson Dam Fish Bypass	10. SIZE AND TYPE OF BIT HQ3 Longyear Series 2
2. LOCATION (Coordinates or Station) N 102,344.044; E 1,763,543.210 — Howard Hanson Dam Green River, WA	11. DATUM FOR ELEVATION SHOWN (TBM or MSL) Horizontal NAD27 (N. Zone) Vertical NGVD 29
3. DRILLING AGENCY Ruen Drilling	12. MANUFACTURER'S DESIGNATION OF DRILL Christensen CS-1000
4. HOLE NO. (As shown on drawing title and file number) 99-DD-204	13. TOTAL NO. OF OVER-BURDEN SAMPLES TAKEN — DISTURBED 2 — UNDISTURBED 0
5. NAME OF DRILLER Randy Painter	14. TOTAL NUMBER CORE BOXES 19
6. DIRECTION OF HOLE ☐ VERTICAL ☒ INCLINED 15° ~N20°E DEG. FROM VERT.	15. ELEVATION GROUND WATER
	16. DATE HOLE — STARTED 27 July 1999 — COMPLETED 28 July 1999
7. THICKNESS OF OVERBURDEN 14.8'	17. ELEVATION TOP OF HOLE 1,164.120 TOC
8. DEPTH DRILLED INTO ROCK 195.2'	18. TOTAL CORE RECOVERY FOR BORING 98 %
9. TOTAL DEPTH OF HOLE 210.0'	19. SIGNATURE OF INSPECTOR David Ryzak

ELEVATION a	DEPTH b	LEGEND c	CLASSIFICATION OF MATERIALS (Description) d	% CORE RECOVERY/RQD e: % CORE RECOV.	RQD	RUN/BOX I.D. f		REMARKS (Drilling time, water loss, depth of weathering, etc., if significant) g
1,164.1			Overburden, road fill					Ground Surface (G.S.) elevation: 1,162.38'. Coring was started @ 5'.
				30	0	A	BOX 1	Boring consistently maintains 15° off vertical inclination from 0 to 210' depth per Norcal Borehole Deviation log.
	10			12	0	B	BOX 1	
1,149.8			@ 14.8', top of bedrock					4" I.D. steel casing to 19.4'.
			ANDESITE BRECCIA w/distinct fragments, soft to moderately hard (can be scratched w/fingernail), dk. gray w/greenish-gray coloration in fragments. Highly fractured @ 19.5-20.6'.	98	87	C	BOX 1	
	20			83	0	D	BOX 1	
				100	93	E	BOX 2	
				100	96	F	BOX 2	12 — 40.8 g.p.m./5 min. Unable to maintain gage above 22 p.s.i. 22 - 0 p.s.i./<5 sec.
	30		Pervasive clay alteration w/0.5 to 1% disseminated pyrite	100	90	G	BOX 2	
			Clay in fractures	100	92	H	BOX 3	
	40			98	70	I	BOX 3	
			@ 44.6-46.8', highly fractured	96	44	J	BOX 4	11 — 10 g.p.m./5 min. 50 - 0 p.s.i./2 min.
	50			90	100	K	BOX 4	
				96	54	L	BOX 5	
	60		@ 59-60', highly fractured	100	96	M	BOX 5	10 — 32.8 g.p.m./5 min. 40 - 0 p.s.i./2 min.
				93	60	N	BOX 6	
	70		@ 70.5', noticeably less clay in fractures	93	89	O	BOX 6	
				100	82	P	BOX 6	9 — 0 g.p.m./5 min. 60 - 6 p.s.i./2 min.
	80			100	82	Q	BOX 7	
1,082.0			@ 85', steep w/igneous contact					
			ANDESITE BRECCIA, medium-grained w/less clay alteration than in breccia, moderately hard, dk. gray	100	60	R	BOX 8	
	90			96	85	S	BOX 8	8 — 2.4 g.p.m./5 min. 60 - 0 p.s.i./1 min.
			@ 95.7-98.3', highly fractured	100	21	T	BOX 8	
			@ ~ 96', scattered calcite replacement					
1,067.5	100		@ 99', dipping w/igneous contact					

DESIGN FILE: J:\cw\hh\geotech\hh99dd200logsa.dgn
DATE AND TIME PLOTTED: 05-JUN-2000 10:51

ENG FORM 1836 PREVIOUS EDITIONS ARE OBSOLETE.
MAR 71

PROJECT Howard Hanson Dam Fish Bypass — HOLE NO. 99-DD-204

DRILLING LOG (Cont Sheet)

ELEVATION TOP OF HOLE: 1,164.12' TOC

Hole No. 99-DD-204

PROJECT: Howard Hanson Dam Fish Bypass

INSTALLATION: Seattle District

SHEET 2 OF 2 SHEETS

ELEVATION a	DEPTH b	LEGEND c	CLASSIFICATION OF MATERIALS (Description) d	% CORE RECOVERY/RQD e: %CORE RECOV.	RQD	RUN/BOX I.D. f		REMARKS (Drilling time, water loss, depth of weathering, etc., if significant) g
1,067.5			ANDESITE BRECCIA, soft to moderately hard (can be scratched w/finger-nail), medium to dk. gray w/greenish tint, due to clay alteration	100	78	V	BOX 9	7 — 1.2 g.p.m./5 min. 65 - 7 p.s.i./2 min.
				100	100	U		
				100	88	W		
	110		@ 112-120', ltr. color, due to increased pervasive clay alteration	100	66	X	BOX 10	
				100	72	Y		
	120			100	84	Z	BOX 11	6 — 0.8 g.p.m./5 min. 69 - 25 p.s.i./2 min.
1,043.8			@ 124.5', indistinct contact ANDESITE BRECCIA, medium grained, moderately hard, nearly black when wet	100	88	AA		
	130		@ 131.5', indistinct contact ANDESITE BRECCIA (?) w/indistinct fragments in most sections. Could be classified as ANDESITE, moderately hard, dk. gray	89	76	AB	BOX 12	
1,037.1				98	68	AC		5 — 1.2 g.p.m./5 min. 68 - 35 p.s.i./2 min.
	140			96	87	AD	BOX 13	
1,021.6			@ 147.5', dipping contact ANDESITE, fine-grained, moderately hard, dk. gray	100	88	AE		
	150		@ 151', medium-grained w/chlorite in fractures & scattered calcite replacement, dk. gray to nearly black	100	66	AF	BOX 14	4 — 0 g.p.m./5 min. 65 - 34 p.s.i./2 min.
				100	88	AG		
	160		Intensely fractured	100	82	AH	BOX 15	
				96	71	AI		3 — 0 g.p.m./5 min. 65 - 22 p.s.i./2 min.
	170		Rehealed fault breccia, 0.3' thick	100	72	AJ	BOX 16	
				100	88	AK		
	180		Highly fractured, 0.2' thick	100	84	AL	BOX 17	2 — 0 g.p.m./5 min. 65 - 14 p.s.i./2 min.
				100	54	AM		
	190		@ 187.8-192.2', highly fractured	98	51	AN	BOX 18	
976.2			ANDESITE BRECCIA, moderately hard, dk. gray					
973.3			ANDESITE, medium-grained w/increased chlorite alteration w/depth, moderately hard, dk. gray	100	44	AO		1 — 0 g.p.m./5 min. 67 p.s.i./2 min.
	200			100	66	AP	BOX 19	
				100	68	AQ		
961.3	210		Total Depth: 210'			19 Core Boxes		

DESIGN FILE: J:\pcw\hh\geotech\hh99dd200logsa.dgn

DRILLING LOG

DIVISION: CENWS

INSTALLATION: Seattle District

SHEET 1 OF 2 SHEETS

1. PROJECT: Howard Hanson Dam Fish Bypass
2. LOCATION (Coordinates or Station): N 102,437.672; E 1,763,389.463 — Howard Hanson Dam, Green River, WA
3. DRILLING AGENCY: Ruen Drilling
4. HOLE NO. (As shown on drawing title and file number): 99-DD-205
5. NAME OF DRILLER: Randy Painter
6. DIRECTION OF HOLE: [X] VERTICAL [ ] INCLINED _____ DEG. FROM VERT.
7. THICKNESS OF OVERBURDEN: 1.3'
8. DEPTH DRILLED INTO ROCK: 191.7'
9. TOTAL DEPTH OF HOLE: 193'
10. SIZE AND TYPE OF BIT: HQ3 Longyear Series 2
11. DATUM FOR ELEVATION SHOWN (TBM or MSL): Horizontal NAD27 (N. Zone) Vertical NGVD 29
12. MANUFACTURER'S DESIGNATION OF DRILL: Christensen CS-1000
13. TOTAL NO. OF OVER-BURDEN SAMPLES TAKEN: DISTURBED --; UNDISTURBED --
14. TOTAL NUMBER CORE BOXES: 19
15. ELEVATION GROUND WATER: 05 August 1999: 4.8' b.g.s.
16. DATE HOLE: STARTED 04 August 1999; COMPLETED 05 August 1999
17. ELEVATION TOP OF HOLE: 1,167.770' TOC
18. TOTAL CORE RECOVERY FOR BORING: 99+ %
19. SIGNATURE OF INSPECTOR: Brenda Garcia

ELEVATION (a)	DEPTH (b)	CLASSIFICATION OF MATERIALS (Description) (d)	% CORE RECOVERY (e)	ROD (e)	RUN/BOX I.D. (f)	BOX	REMARKS (Drilling time, water loss, depth of weathering, etc., if significant) (g)
1,166.5		@ 1.3', top of bedrock					Ground Surface (G.S.) elevation: 1,166.2'.
		W/iron; highly fractured ANDESITE BRECCIA, sl. weathered to unweathered, moderately fractured, hard to v. hard, gray to dk. gray. @ 5', BRECCIA, hard to v. hard, gray.	100	70	A		Coring was started @ 1'.
		Intensely fractured	100	80	B	BOX 1	
	10	W/iron, clay	100	75	C		
		Highly fractured W/iron, clay					
		Interbedded BRECCIA & ANDESITE	100	74	D	BOX 2	
		W/slicks, clay					
		W/slicks					
	20	@ ~ 21.5-22.5', intensely fractured w/slicks — Change to hard, pinkish-gray	100	34	E		
			100	55	F		
		W/clay				BOX 3	11 — 0.5 g.p.m./8 min. 40 - 0 p.s.i./1 min.
		W/slicks	100	48	G		
1,137.8	30	@ 28.7-33', intensely to highly fractured, w/slicks, clay	100	0	H		
		Shear w/calcite, iron					
		W/slicks	100	50	I	BOX 4	
		Highly fractured w/slicks, calcite, chlorite	100	60	J		
		W/calcite					
	40	W/slicks	100	54	K		10 — 7.2 g.p.m./5 min. 30 - 9 p.s.i./2 min.
		W/slicks, calcite					
		W/slicks, clay — ANDESITE, hard, gray	100	84	L	BOX 5	
		W/trace clay					
		W/calcite; highly fractured					
	50	W/iron, W/slicks — ANDESITE & BRECCIA, moderately hard, lt. gray	100	50	M		
		W/iron					
		W/gray clay inclusions	100	100	N	BOX 6	9 — 8.4 g.p.m./5 min. 50 - 30 p.s.i./2 min.
		@ 59-60', highly fractured					
	60	@ 60.6-61.3', highly fractured w/slicks, pyrite	100	70	O		
		W/slicks, pyrite					
		W/slicks, pyrite; highly fractured	100	76	P	BOX 7	
		W/clay					
	70	W/slicks, calcite	100	100	Q		
		W/slicks, clay/clay inclusions					8 — 6.0 g.p.m./5 min. 51 - 0 p.s.i./2 min.
			100	100	R	BOX 8	
		Gray w/red-brown					
	80	ANDESITE, hard, red-brown to gray-green	100	90	S		
		Steep w/slicks, clay	100	86	T	BOX 9	7 — 0 g.p.m./2 min. 58 - 44 p.s.i./2 min.
		Steep					
		Abundant healed fractures					
	90		100	68	U		
		W/slicks; highly fractured					
		W/slicks					
		W/slicks	100	98	V	BOX 10	
1,067.8	100						

DESIGN FILE: J:#cwhh#geotech#hh99dd2001ogsa.dgn
DATE AND TIME PLOTTED: 05-JUN-2000 10:52

DRILLING LOG (Cont Sheet)

ELEVATION TOP OF HOLE: 1,167.770' TOC

Hole No. 99-DD-205

PROJECT: Howard Hanson Dam Fish Bypass

INSTALLATION: Seattle District

SHEET 2 OF 2 SHEETS

ELEVATION a	DEPTH b	LEGEND c	CLASSIFICATION OF MATERIALS (Description) d	% CORE RECOVERY/RQD e: %CORE RECOV	RQD	RUN/BOX I.D. f		REMARKS (Drilling time, water loss, depth of weathering, etc., if significant) g
1,067.8			Steep Hard to moderately hard, dk. gray & red	100	69	W	6	0.8 g.p.m./5 min. 56 - 30 p.s.i./2 min.
			Alternating ANDESITE & ANDESITE BRECCIA					
			Steep w/slicks	100	96	X	BOX 11	
	110			100	100	Y		
			W/brown clay	100	100	Z	5	1.4 g.p.m./5 min. 55 - 9 p.s.i./1 min.
1,049.8			@ 118', water production zone w/slicks					
	120		Vertical w/iron, clay	88	32	AA	BOX 12	
			Shear w/iron, clay					
			W/slicks	100	100	AB		
	130		W/slicks, iron W/slicks	100	82	AC	BOX 13	
			W/slicks; highly fractured Becoming mostly gray w/occ. faint red-brown inclusion	100	96	AD	4	14.6 g.p.m./5 min. 52 - 6 p.s.i./2 min.
	140		Steep Steep w/quartz	100	80	AE	BOX 14	
				100	100	AF	3	21.0 g.p.m./5 min. 50 - 20 p.s.i./2 min.
	150		W/clay Steep w/iron, clay; highly fractured	100	80	AG	BOX 15	
			W/slicks; highly fractured ANDESITE & BRECCIA, interbedded, moderately hard to hard, gray w/red-dish-brown	100	52	AH		
			W/iron; highly fractured Clay					
	160		W/iron, clay; highly fractured	100	96	AI	BOX 16	2	18.2 g.p.m./5 min. 68 - 26 p.s.i./2 min.
			Gray to dk. gray	100	100	AJ		04 August 1999 05 August 1999
	170		@ 172', moderately hard, lt. gray	100	100	AK	BOX 17	
			W/iron; highly fractured W/slicks W/slicks W/slicks Hard, dk. gray	100	68	AL		
	180		Moderately hard, lt. gray	100	98	AM	1	6.0 g.p.m./5 min. 64 - 0 p.s.i./1 min.
			W/iron staining, clay	100	86	AN	BOX 18	
	190		W/iron, pyrite, calcite; highly fractured W/iron W/iron W/calcite; highly fractured	100	42	AO	BOX 19	
974.8			Total Depth: 193'			Total of 19 core boxes		

DESIGN FILE: J:\cw\hh\geotech\hh99dd200logsa.dgn
DATE AND TIME PLOTTED: 05-JUN-2000 10:52

DRILLING LOG	DIVISION CENWS	INSTALLATION Seattle District	SHEET 1 OF 2 SHEETS

1. PROJECT: Howard Hanson Dam Fish Bypass
2. LOCATION (Coordinates or Station): N 102,328.649; E 1,763,530.928 — Howard Hanson Dam, Green River, WA
3. DRILLING AGENCY: Ruen Drilling
4. HOLE NO. (As shown on drawing title and file number): 99-DD-206
5. NAME OF DRILLER: Randy Painter
6. DIRECTION OF HOLE: [X] VERTICAL [ ] INCLINED _____ DEG. FROM VERT.
7. THICKNESS OF OVERBURDEN: 21′
8. DEPTH DRILLED INTO ROCK: 169′
9. TOTAL DEPTH OF HOLE: 190′
10. SIZE AND TYPE OF BIT: HQ3 Longyear Series 2
11. DATUM FOR ELEVATION SHOWN (TBM or MSL): Horizontal NAD27 (N. Zone) Vertical NGVD 29
12. MANUFACTURER'S DESIGNATION OF DRILL: Christensen CS-1000
13. TOTAL NO. OF OVER-BURDEN SAMPLES TAKEN: DISTURBED -- ; UNDISTURBED --
14. TOTAL NUMBER CORE BOXES: 16
15. ELEVATION GROUND WATER: Artesian ~ 15 g.p.m.
16. DATE HOLE: STARTED 02 August 1999 ; COMPLETED 02 August 1999
17. ELEVATION TOP OF HOLE: 1,164.350′
18. TOTAL CORE RECOVERY FOR BORING: 98 %
19. SIGNATURE OF INSPECTOR: Brenda Garcia

ELEVATION a	DEPTH b	LEGEND c	CLASSIFICATION OF MATERIALS (Description) d	% CORE RECOVERY e	ROD e	RUN/BOX I.D. f	REMARKS (Drilling time, water loss, depth of weathering, etc., if significant) g
1,164.4			GP: Gravel w/sand & cobbles, medium dense to dense, varied-colored				Ground Surface (G.S.) elevation: 1,164.05′. Coring was started @ 15′. No overburden was recovered.
	10						
1,143.4	20		@ 21′, top of bedrock				
			Highly fractured ANDESITE BRECCIA, sl. weathered to unweathered, sl. to moderately fractured, moderately hard, gray	80	46	A	4″ I.D. steel casing to 25′ depth
			W/iron				
			W/clay	100	26	B	BOX 1
	30		Brittle zone				
			W/clay	98	76	C	
			Intensely fractured w/iron staining	92	54	D	BOX 2
			W/clay				
	40		@ ~ 39-43′, clay inclusions	100	100	E	10 — 18.6 g.p.m./5 min. 55 - 26 p.s.i./2 min.
			Breccia has red-brown inclusions				
			W/clay	100	72	F	BOX 3
			W/clay				
	50			94	92	G	
			W/clay	100	96	H	BOX 4 — 9 — 39.8 g.p.m./4 min. 20 - 11 p.s.i./5 sec.
			W/clay				
	60		W/clay				
			W/clay	98	68	I	
			W/clay				
				96	90	J	BOX 5
			W/clay				
	70		W/slicks, calcite	96	94	K	8 — 0 g.p.m./3 min. 60 - 40 p.s.i./2 min.
				100	100	L	BOX 6
			Color change to greenish-gray w/red-brown inclusions. @ ~ 78-87′, disseminated pyrite.				
	80			100	92	M	
			W/iron, clay				
				100	100	N	7 — 0 g.p.m./2 min. 59 - 31 p.s.i./2 min.
			W/clay				
	90		Moderately hard to hard, color change to gray-green				
			W/clay	100	92	O	BOX 7
			W/iron				
				100	100	P	6 — 40.4 g.p.m./5 min. 19 - 10 p.s.i./10 sec.
1,064.4	100		W/clay				

DESIGN FILE: J:#ewhh#geotech#hh99dd2001logsa.dgn
DATE AND TIME PLOTTED: 05-JUN-2000 10:53

DRILLING LOG (Cont Sheet)

ELEVATION TOP OF HOLE: 1,164.350'

Hole No. 99-DD-206

PROJECT: Howard Hanson Dam Fish Bypass

INSTALLATION: Seattle District

SHEET 2 OF 2 SHEETS

ELEVATION (a)	DEPTH (b)	LEGEND (c)	CLASSIFICATION OF MATERIALS (Description) (d)	% CORE RECOVERY / RQD * %CORE RECOV.	RQD	RUN/BOX I.D. (f)		REMARKS (Drilling time, water loss, depth of weathering, etc., if significant) (g)
1,064.4	100		ANDESITE BRECCIA	100	100	Q	BOX 8	
				100	100	R		
	110		W/iron	100	78	S	BOX 9	
				100	100	T		
	120			100	100	U	BOX 10	5 — 40.8 g.p.m./4 min. 19 - 10 p.s.i./10 sec.
			W/iron, trace clay					
			W/iron	100	78	V		
	130		Highly fractured w/slicks					
			W/iron, slicks; highly fractured Artesian flow @~15 g.p.m.	96	66	W	BOX 11	4 — 39 g.p.m./6 min. 25 - 10 p.s.i./15 sec.
			W/iron	100	36	X		
1,024.4	140		W/iron @ ~ 139-147', clay inclusions Color change to purple & green	100	90	Y		
			Steep angle	100	98	Z	BOX 12	3 — 31.6 g.p.m./5 min. 80 - 6 p.s.i./5 sec.
	150							
			ANDESITE, sl. fractured, hard to v. hard, dk. gray	100	96	AA		
				100	100	AB	BOX 13	
			BRECCIA w/calcite-filled fractures @ top 5', moderately hard to hard, lt. gray to gray-green					
	160			100	98	AC		2 — 30.6 g.p.m./5 min. 20 - 8 p.s.i./10 sec.
			W/iron	100	94	AD	BOX 14	
			W/clay					
			Small shear					
	170		Color change to gray	100	100	AE		
			W/slicks					
				98	96	AF	BOX 15	
	180							
			W/iron	100	94	AG		1 — 34.5 g.p.m./2 min. 18 - 0 p.s.i./15 sec.
			Highly fractured				BOX 16	
			Highly fractured					
			W/iron Contact of between two breccias	100	74	AH		
			W/clay					
974.4	190		W/iron					
			Total Depth: 190'			Total of 16 core boxes		

DESIGN FILE: J:\fcw\hnh\geotech\hh99dd2001logsa.dgn
DATE AND TIME PLOTTED: 05-JUN-2000 10:53

DRILLING LOG (Cont Sheet) | ELEVATION TOP OF HOLE: Concrete Deck @ 1040.3 | Hole No. ~~DD~~-DD-207

PROJECT: HOWARD HANSON DAM FISH BYPASS | INSTALLATION | SHEET 2 OF 2 SHEETS

ELEVATION a	DEPTH b	LEGEND c	CLASSIFICATION OF MATERIALS (Description) d	% CORE RECOV. e	BOX OR SAMPLE NO. f	REMARKS (Drilling time, water loss, depth of weathering, etc., if significant) g
1040.3			rough	100 93	X (Box 9)	
			intensely fractured, slight-moderate weathering	88 86	Y (Box 10)	
			105.5 intensely fractured, tr. clay, slight-moderate weathering			
			108 intensely fractured, slightly-moderately weathered			
	110		109.4 rubble	100 76	Z (Box 10)	
			slickensides			
			clay infilled fracture — darker green			
				98 88	AA (Box 11)	
			slickensides			
	120		slickensides — dark green to olive	96 76	AB (Box 11)	
			121.9 intensely fractured moderate weathering — hard			
			intensely fractured — lt. green	98 80	AC (Box 11)	
			moderately hard			
			intensely fractured friable			
	130				(Box 12)	
			intensely fractured	100 77	AD (Box 12)	
			intensely fractured, friable, gtc infilling friable			
			mb — hard	100 89	AE (Box 12)	
			moderately hard			
1000.3	140		Gray			
				71 100	AF (Box 13)	TD 140 13 core boxes

Hole No. 00-DD-207

DRILLING LOG	DIVISION	INSTALLATION	SHEET 1 OF 2 SHEETS

1. PROJECT: Howard Hanson Dam Fish Bypass	10. SIZE AND TYPE OF BIT: Longmeat HQ Series 6
2. LOCATION (Coordinates or Station): N102,404.990 → ~~N102,405.[illegible]~~ E 1,763,525.[illegible] 461	11. DATUM FOR ELEVATION SHOWN (TBM or MSL): NAD 27 (N. ZONE) NGVD 29
3. DRILLING AGENCY: Ruen Drilling	12. MANUFACTURER'S DESIGNATION OF DRILL: Christensen CS 1500
4. HOLE NO. (As shown on drawing title and file number): 00-DD-207	13. TOTAL NO. OF OVER-BURDEN SAMPLES TAKEN: DISTURBED — UNDISTURBED —
5. NAME OF DRILLER: Mike Edmundson	14. TOTAL NUMBER CORE BOXES: 13
6. DIRECTION OF HOLE: ☒ VERTICAL ☐ INCLINED ____ DEG. FROM VERT.	15. ELEVATION GROUND WATER
	16. DATE HOLE: STARTED 2/16/00 COMPLETED 2/21/00
7. THICKNESS OF OVERBURDEN: 0	17. ELEVATION TOP OF HOLE: 1139.276 TOC
8. DEPTH DRILLED INTO ROCK: 140	18. TOTAL CORE RECOVERY FOR BORING: 94 %
9. TOTAL DEPTH OF HOLE: 140	19. SIGNATURE OF INSPECTOR: John [illegible]

ELEVATION a	DEPTH b	LEGEND c	CLASSIFICATION OF MATERIALS (Description) d	% CORE RECOVERY e (Recovery / RQD)	BOX OR SAMPLE NO. f	REMARKS (Drilling time, water loss, depth of weathering, etc., if significant) g
1140.3			0-4.2' void space below 1140 deck.			Top of Casing (TOC) ~~[illegible]~~ EL 1140.259 Surface of Concrete Deck
1136.1			Andesite breccia, grey w/traces of grey green, unweathered, moderately hard to hard, fine grained, highly fractured blocking	76 19	A	BOX 1
	10		rough, slight weathering	56 57	B	
				100 40	C	
			diagonal fracture, unweathered, tr. sand relatively coarser			
	20		intensely fractured 20.8' and 21.6' slickensided slight weathering	100 0	D	BOX 2
			23.5 intensely fractured, some clay relatively finer grading to grey green	67 0	E	
			slickensided	100 60	F	
	30		Andesite, grey to grey green, unweathered to moderately weathered, moderately hard to hard, moderately to highly fractured 33' slickensided	100 52	G	BOX 3
			diagonal fracture, slightly weathered, rough coarsening downward	100 48	H	
	40		40 intensely fractured			
			mb	100 86	I	BOX 4
			healed fracture 46' intensely fractured, tr. clay & sand mb slickensides	100 90	J	
	50		50.2' intensely fractured	100 76	L	← RUNK REC. 100 RQD 0
				30 0	M	BOX 5
			rock bolt bore hole in core	85 76	N	ROCK BOLT
			Andesite breccia, green, unweathered, moderately hard to hard, coarse grains in fine matrix, moderately fractured	100 91	O	blocking
	60		rubble zone, intensely fractured, unweathered rubble zone, some clay, slight weathering			
			slickensides	100 60	P	BOX 6
			dark green	100 58	Q	
			intensely fractured, angular fragments			
	70		Andesite, black, hard, unweathered, medium grain, moderately fractured, dioritic	98 94	R	BOX 7
			hard	100 48	S	
			intensely fractured			
	80		green andesite - black diorite alternating	98 100	T	BOX 8
			intensely fractured large healed fracture	100 75	U	
			rough			
	90		light green	100 88	V	BOX 9
			rubble zone, tr. clay, intensely fractured	78 0	W	
1040.3	100					

ENG FORM 1836 MAR 71 PREVIOUS EDITIONS ARE OBSOLETE. PROJECT HOLE NO.

DRILLING LOG | DIVISION | INSTALLATION | SHEET 1 OF 2 SHEETS

1. PROJECT: Howard Hanson Dam Fish Bypass
2. LOCATION (Coordinates or Station): N102,372.484 E 1,763,501.792
3. DRILLING AGENCY: Ruen Drilling
4. HOLE NO. (As shown on drawing title and file number): 00-DD-208
5. NAME OF DRILLER: Mike Edmunson
6. DIRECTION OF HOLE: ☒ VERTICAL ☐ INCLINED _____ DEG. FROM VERT.
7. THICKNESS OF OVERBURDEN: 11'
8. DEPTH DRILLED INTO ROCK: 139.2'
9. TOTAL DEPTH OF HOLE: 150.2'
10. SIZE AND TYPE OF BIT: Longyear HQ series 6
11. DATUM FOR ELEVATION SHOWN (TBM or MSL): NAD 27 (N. Zone) NGVD 29
12. MANUFACTURER'S DESIGNATION OF DRILL: Christensen CS 1500
13. TOTAL NO. OF OVER-BURDEN SAMPLES TAKEN: DISTURBED — UNDISTURBED —
14. TOTAL NUMBER CORE BOXES: 13
15. ELEVATION GROUND WATER: 18.45 2/28/00
16. DATE HOLE: STARTED 2/25/00 COMPLETED 2/29/00
17. ELEVATION TOP OF HOLE: 1164.424 Ft (TOC)
18. TOTAL CORE RECOVERY FOR BORING:
19. SIGNATURE OF INSPECTOR: John Glover

ELEVATION a	DEPTH b	LEGEND c	CLASSIFICATION OF MATERIALS (Description) d	% CORE RECOVERY e	RQD	BOX OR SAMPLE NO. f	REMARKS (Drilling time, water loss, depth of weathering, etc., if significant) g
1164.42			**Random Fill**	Recovery			Top of Casing = TOC Ground = EL 1,165,142 ft
1153.4	10		Bedrock 11'				
			Andesite, grey, fine grained, unweathered, moderately hard joints - slightly rough to rough unweathered to slightly weathered	30	73	A	Blocking throughout 14'-19' interval
				98	0	B	BOX 1
	20			0	0	C	
				2.5	0	D	
				67	75	X	
			coarsening	100	85	E	
			Andesite breccia, unweathered, moderately hard to hard, trace clay inclusions				
	30			98	59	F	BOX 2
				100	32	G	
							BOX 3
	40			100	69	H	
			intensely fractured				
			intensely fractured	100	28	H	
			intensely fractured				
			intensely fractured				BOX 4
	50		friable, soft clay and sand infilling	100	56	J	
			relatively finer	100	100	K	
							BOX 5
	60			100	96	L	
			intensely fractured	92	85	M	
				100	100	N	BOX 6
	70		intensely fractured				
			Andesite, dark green, unweathered, moderately hard to hard	100	70	O	
			hard				
	80		intensely fractured very friable	100	56	P	BOX 7
			intensely fractured, friable				
			relatively coarser				
			intensely fractured friable	100	66	Q	
	90		Andesite breccia grey, hard to moderately hard, coarse in fine matrix, unweathered	100	98	R	BOX 8
				100	92	S	
1064.4	100		intensely fractured				

8A 19/N
8B 30/S
7A 36/0.6
6A 52/1
5A 70/2.0
4A 80/2.6

DRILLING LOG (Cont Sheet) | ELEVATION TOP OF HOLE 1164.42 TOC | Hole No. 00-DD-208

PROJECT Howard Hanson Dam Fish Bypass | INSTALLATION | SHEET 2 OF 2 SHEETS

ELEVATION a	DEPTH b	LEGEND c	CLASSIFICATION OF MATERIALS (Description) d	% CORE RECOVERY e	BOX OR SAMPLE NO. f	REMARKS (Drilling time, water loss, depth of weathering, etc., if significant) g
1064.4	100		intensely fractured rubble zone	100 70	~~U~~ T	BOX 9
			grey-green	100 100	~~X~~ U	
	110			100 86	~~W~~ V	BOX 10
				100 88	~~X~~ W	
	120			96 90	~~Y~~ X	BOX 11
			Andesite, fine-medium grained, unweathered, moderately hard to hard slickensides in joints	100 72	~~Z~~ Y	
	130		128' intensely fractured 130' qtz vein	100 76	~~AA~~ Z	BOX 12
			slickensides Andesite/diorite fine black matrix with white medium-coarse grain crystals, unweathered, moderately hard to hard	100 96	~~AB~~ AA	
	140		fine-medium Andesite grey-green, fine, unweathered, moderately hard	100 39	~~AC~~ AB	BOX 13
			141' intensely fractured slickensides	100 42	~~AD~~ AC	
1014.2	150			100 100	~~AE~~ AD	TD 150.2

1A 36 / 12.7 30 33 / 2.4
1B 72 / 23.4 30 65/9.2
2A 26 / 19.8
2B 48/22.2

OF 2 SHEETS

1. PROJECT: Howard Hanson Dam Fish Bypass	10. SIZE AND TYPE OF BIT: Longyear Series 6 HQ
2. LOCATION (Coordinates or Station): N 102,408.310 E 1,763,410.623	11. DATUM FOR ELEVATION SHOWN (TBM or MSL): NAD 27 (N. Zone) NGVD 29
3. DRILLING AGENCY: Ruen Drilling	12. MANUFACTURER'S DESIGNATION OF DRILL: Christensen CF 1500
4. HOLE NO. (As shown on drawing title and file number): 00-DD-209	13. TOTAL NO. OF OVER-BURDEN SAMPLES TAKEN: DISTURBED — UNDISTURBED —
5. NAME OF DRILLER: Mike Edmundson	14. TOTAL NUMBER CORE BOXES: 18
6. DIRECTION OF HOLE: ☒ VERTICAL ☐ INCLINED ____ DEG. FROM VERT.	15. ELEVATION GROUND WATER
	16. DATE HOLE: STARTED 3/7/00 COMPLETED 3/9/00
7. THICKNESS OF OVERBURDEN: 0.1'	17. ELEVATION TOP OF HOLE: 1169.16 TOC
8. DEPTH DRILLED INTO ROCK: 179.9'	18. TOTAL CORE RECOVERY FOR BORING: 99 %
9. TOTAL DEPTH OF HOLE: 180'	19. SIGNATURE OF INSPECTOR: John C. Glover

ELEVATION a	DEPTH b	LEGEND c	CLASSIFICATION OF MATERIALS (Description) d	% CORE RECOVERY e	BOX OR SAMPLE NO. f	REMARKS (Drilling time, water loss, depth of weathering, etc., if significant) g
1169.2			Andesite breccia, grey to grey-green Moderately hard, unweathered, clay inclusions, moderately fractured	REC RQD 98 73	A	0.1' overburden TOC = Top of Casing (4") Access Site cut into hillside using dozer & backhoe Ground Surface EL = 1169.59
			intensely fractured shear zone	96 46	B	
	10		Intensely fractured fine-medium	100 58	C	
			slickensides developing fine-coarse			
			rough	100 96	D	
	20			100 98	E	
			rough coarser			
			rough	98 90	F	
	30		rough finer			
			rough coarser	100 100	G	
				96 100	H	
	40		rough Grades into Andesite breccia red-brown, fine grain matrix medium-coarse clasts, moderately hard, unweathered, moderately fractured 41.5' intensely fractured	100 100	I	
			42' grades back into grey-green as above	100 62	J	
	50		47' slickensides developing red brown grey green red brown grey green	100 72	K	
			rough intensely fractured	98 65	L	
	60		intensely fractured intensely fractured intensely fractured	100 58	M	
			intensely fractured Andesite breccia, red brown, moderately hard, moderately fractured, medium grain	98 49	N	
	70		intensely fractured	100 98	O	
			Andesite breccia grey green moderately hard, moderately fractured, unweathered, fine matrix w/coarse inclusions 77.5 intensely fractured	100 82	P	
	80			100 90	Q	
				100 100	R	
	90			100 100	S	
1069.2	100		Intensely fractured slickensides	98 96	T	

Box 1, Box 2, Box 3, Box 4, Box 5, Box 6, Box 7, Box 8, Box 9, Box 10

38/11.2 20/6.4 9A 9B 50/1.2 26/0.8 8A 8B 62/2.2 30/1.2 7A 7B 74/2.2 30/1.2 6A 6B

ENG FORM 1836 MAR 71 PREVIOUS EDITIONS ARE OBSOLETE. (TRANSLUCENT)

PROJECT | HOLE NO.

DRILLING LOG (Cont Sheet) | ELEVATION TOP OF HOLE 1169.16 TOC | Hole No. 00-DD-209

PROJECT: Howard Hanson Dam Fish Bypass | INSTALLATION | SHEET 2 OF 2 SHEETS

ELEVATION a	DEPTH b	LEGEND c	CLASSIFICATION OF MATERIALS (Description) d	% CORE RECOVERY e	BOX OR SAMPLE NO. f	REMARKS (Drilling time, water loss, depth of weathering, etc., if significant) g
1069.2				98 96	U	
				100 94	V	Box 11
	110		Andesite breccia red brown coarse inclusions in green grey fine matrix, moderately hard, unweathered, moderately fractured	98 100	W	
				100 100	X	Box 12
	120		reddish brown inclusions decreasing grey green material increasing. rough	98 100	Y	
				100 100	Z	Box 13
	130		rough	100 100	AA	
				100 82	AB	Box 14
	140		intensely fractured rubble tr. clay	100 74	AC	
			friable			
			Andesite breccia red brown coarse inclusions in grey green fine matrix unweathered, moderately hard, moderately fractured	100 98	AD	Box 15
	150			100 98	AE	
				100 100	AF	Box 16
	160		healed fractures 160-161			
			very friable	100 49	AG	
			162.3-164 Intensely fractured healed fractures, 164-166 intensely fractured			
				100 80	AH	Box 17
	170		170.2-171.7 healed fractures	100 100	AI	
			Intensely fractured 175.-175.7	100 0	AJ	
			176.3-177.8 Intensely fractured 176 quartz vein	100 44	AK	Box 18
989.2	180					TD 180'

1A 80/1.7 2A 16/29.8 3A 42/29.6 4A 42 12.2 5A 92/0.4
1B 40/1 2B 8/14.8 3B 22/15.8 4B 20 6.2 5B NOT RUN

ENG FORM 1836-A JUN 67 (ER 1110-1-1801) GPO 1980 OF-628-603

PROJECT: HH Dam Fish Bypass | HOLE NO. 00-DD-209

1. PROJECT: Howard Hanson Dam Fish Bypass		10. SIZE AND TYPE OF BIT: Longyear Series 6 HQ	OF SHEETS
2. LOCATION (Coordinates or Station): N102,385.072 E 1,763,385.744		11. DATUM FOR ELEVATION SHOWN (TBM or MSL): NAD 27 (N. Zone) NGVD 29	
3. DRILLING AGENCY: Ruen Drilling		12. MANUFACTURER'S DESIGNATION OF DRILL: Christensen CF 1500	
4. HOLE NO. (As shown on drawing title and file number): 00-DD-210		13. TOTAL NO. OF OVER-BURDEN SAMPLES TAKEN: DISTURBED / UNDISTURBED	
5. NAME OF DRILLER: Mike Edmundson		14. TOTAL NUMBER CORE BOXES	
6. DIRECTION OF HOLE: ☒ VERTICAL ☐ INCLINED _____ DEG. FROM VERT.		15. ELEVATION GROUND WATER	
		16. DATE HOLE: STARTED 3/19/00 COMPLETED 3/15/00	
7. THICKNESS OF OVERBURDEN: 13.8'		17. ELEVATION TOP OF HOLE: 1,182.04 TOC	
8. DEPTH DRILLED INTO ROCK: 186.2'		18. TOTAL CORE RECOVERY FOR BORING: %	
9. TOTAL DEPTH OF HOLE: 200'		19. SIGNATURE OF INSPECTOR: John E. Thomson	

ELEVATION a	DEPTH b	LEGEND c	CLASSIFICATION OF MATERIALS (Description) d	% CORE RECOVERY e	BOX OR SAMPLE NO. f	REMARKS (Drilling time, water loss, depth of weathering, etc., if significant) g
1182.0			Overburden, gravel fill			
	10					WATER PRESSURE TESTING GPM / PSI
1168.2			0.2' moderately weathered ANDESITE, Porphyritic, grey, moderately hard to hard, unweathered, moderately fractured	100 100	A	13.8'
			15' ANDESITE BRECCIA, grey, moderately hard, unweathered, moderately fractured, medium to coarse in fine matrix	100 100	B	1
	20		rough	100 70	C	21' slickensides developing
				96 85.9	D	2
	30		rubble filled fracture	100 82	E	12A 0.4/40 12B 0/20
				100 94	F	3
	40		rough	100 92	G	
			rubble	96 81.3	H	10.2/30 3.2/15
	50		rough	100 70	I	4 11A 11B
			rubble			
			rough			
			rough			
			relatively finer	100 86	J	
	60		rough	100 90	K	5 10A 0.6/50 10B 0.2/25
			slickensides	90 100	L	
	70		rough			
			relatively coarser	100 100	M	6
			rough			
			coarser matrix	84 95	N	9A 10.4/58 9B 6.8/29
			rough			
	80		rough	100 91.7	O	
			rough	100 100	P	7
			rubble			
			rough			
			rough	100 100	Q	
			rough			
	90		rough	100 100	R	8 8A 10.6/60 8B 5.6/30
			rough			
			rough trace rubble			
			rough			
1082.0	100			100 98	S	

DRILLING LOG (Cont Sheet) | ELEVATION TOP OF HOLE 1,182.04 | Hole No. 00-DD-210

PROJECT HOWARD HANSON DAM FISH BYPASS | INSTALLATION | SHEET 2 OF 2 SHEETS

ELEVATION a	DEPTH b	LEGEND c	CLASSIFICATION OF MATERIALS (Description) d	% CORE RECOVERY e	BOX OR SAMPLE NO. f		REMARKS (Drilling time, water loss, depth of weathering, etc., if significant) g
1082.0	100		Gradational change ANDESITE DK green to grey, moderately hard to hard, unweathered, moderately fractured Grades back to ANDESITE BRECCIA @ 105'	100 76	T		
				100 80	U	9	1A 5.2/76 1B 2.0/38
	110		ANDESITE BRECCIA rough	100 100	V		7A
			rough				7B
				100 100	W	10	
	120		Porphyritic ANDESITE coarse clasts gone healed rubble zone	100 76	X		
			Intensely fractured, rubble 123.2-123.7				6A 3.6/66 6B 1.2/33
				100 72	Y	11	
	130		129.1-129.8 Intensely fractured, rubble	100 38	Z		
			131.8-132.7 Intensely fractured, rubble rubble				
			rubble			12	8.4/30 16.8/60
			rubble 0.05' healed fracture	100 46	AA		
	140		139.5-139.8 Intensely fractured, rubble				5A 5B
			rough	100 97.9	AB		
			rubble				
			rough	100 98	AC	13	
			rough rubble				
	150		rough	94 85.2	AD		blocking
			rough				4A 13.8/18 4B 22.4/36
			ANDESITE PORPHYRITIC, red brown to dk green, unweathered, moderately hard, moderately fractured 158.~~5~~-158.95 healed rubble zone	100 98	AE	14	
	160		rubble healed fractures	100 88	AF		
				100 70.4	AG		
			rubble zone	98 37.3	AH	15	3A 19.2/28 3B 26.0/56
	170		healed fracture				
			rough rough	100 79.2	AI		
			rough			16	
	180		rubble zone 0.2'	94 75	AJ		2A 20.2/10 2B 27.8/20
			ANDESITE BRECCIA DK green fine matrix red brown coarse clasts, unweathered moderately hard to hard, moderately fractured	100 100	AK	17	
	190			100 89.3	AL		
				100 91	AM		
				100 92	AN	18	1A 25.8/28 1B 16.2/14
982.0	200		rubble				

TD - 200'

ENG FORM 1836-A JUN 67 (ER 1110-1-1801) GPO 1980 OF-628-603

PROJECT HH DAM FISH BYPASS | HOLE NO. 00-DD-210

Hole No. 00-DD-211

DRILLING LOG | DIVISION | INSTALLATION | SHEET 1 OF SHEETS

1. PROJECT: Howard Hanson Dam Fish Bypass
2. LOCATION (Coordinates or Station): N 102,307.432 E 1,763,507.685
3. DRILLING AGENCY: Ruen Drilling
4. HOLE NO. (As shown on drawing title and file number): 00-DD-211
5. NAME OF DRILLER: Mike Edmundson
6. DIRECTION OF HOLE: ☒ VERTICAL ☐ INCLINED ____ DEG. FROM VERT.
7. THICKNESS OF OVERBURDEN: 30.5'
8. DEPTH DRILLED INTO ROCK: 109.5
9. TOTAL DEPTH OF HOLE: 140'
10. SIZE AND TYPE OF BIT: Longyear Series 6 HQ
11. DATUM FOR ELEVATION SHOWN (TBM or MSL): NAD 27 (N. Zone) NGVD 29
12. MANUFACTURER'S DESIGNATION OF DRILL: Christensen CF 1500
13. TOTAL NO. OF OVER-BURDEN SAMPLES TAKEN: DISTURBED 7 | UNDISTURBED
14. TOTAL NUMBER CORE BOXES: 11
15. ELEVATION GROUND WATER
16. DATE HOLE: STARTED 3/21/00 | COMPLETED 3/22/00
17. ELEVATION TOP OF HOLE: 1,177.31 TOC
18. TOTAL CORE RECOVERY FOR BORING: %
19. SIGNATURE OF INSPECTOR: John A. Palmer

ELEVATION a	DEPTH b	LEGEND c	CLASSIFICATION OF MATERIALS (Description) d	% CORE RECOVERY REC • RQD	BOX OR SAMPLE NO. f	REMARKS (Drilling time, water loss, depth of weathering, etc., if significant) g
1177.3	0		CL Gravelly CLAY w/coarse sand, organic debris, cobbles, medium to very dense, NP, Brown w/dk green gravel and cobbles	20	SPT-A	TOC = Top of Casing Ground Surface = EL 1,178.63
			SG sandy GRAVEL (fine to coarse) w/silt and clay, NP, wet, medium, brown SC-SM silty SAND (fine to coarse) w/gravel, NP, damp to dry, Medium, light brown	70	SPT-B	
	10		SW SAND (medium to coarse) w/fine sand, gravel, clay and silt, NP, medium to very dense, damp, brown	50	SPT-C	
			SW SAND (fine to coarse) w/gravel, silt and clay, NP, dense to very dense, wet, brown	83	SPT-D	
	20		SW SAND (v. fine to medium) w/organic debris, NP, loose to medium, damp, brown	75	SPT-E	
			SW SAND (v. fine to medium) w/gravel, NP, wet, medium, brown SP SAND (medium to coarse) w/gravel, fine sand, NP, damp, dense, dk. brown	96	SPT-F	
1146.8	30		SW RESIDUM SAND (medium to coarse) w/gravel, silt/clay, NP, damp, grey	100	SPT-G	
			30.5 Top of Bedrock ANDESITE BRECCIA, grey, unweathered to slightly weathered, moderately hard to hard moderately fractured	100 75.6	A	
			rubble, rough unweathered rubble rough below 32'	100 57.1	B	1
	40		rubble rough slightly smooth	87 100	C	
			moderately weathered rubble slightly rough	100 82	D	
			rough rough			2
			healed fracture	100 100	E	
	50		rough	100 98	F	
			55.5-56 moderately weathered			3
			Rubble Rough	100 64	G	
	60		tr clay	100 76	H	
			67.6-67.8 Rubble moderately weathered healed fracture diagonal	100 76	I	4
	70		Porphyritic ANDESITE, grey green to dk green, medium clasts in fine matrix, moderately hard to hard, unweathered	98 93.9	J	
			ANDESITE BRECCIA, grey to grey green, unweathered, moderately hard to hard, moderately weathered	100 92	K	5
	80		iron staining	98 100	L	
						6
			87.2-88 Inensely fractured rubble	100 48	M	
	90		rough	98 67	N	
			rough rough			7
			rough rough rough	100 40	O	
1077.3	100			100 93.3	P	

6A 15.0/36 9.2/18
6B
5A 13.2/40 7.6/20
5B
4A 3.0/80 1.4/40
4B

ENG FORM 1836 MAR 71 PREVIOUS EDITIONS ARE OBSOLETE.

PROJECT: HH Dam Fish Bypass | HOLE NO. 00-DD-211

DRILLING LOG (Cont Sheet) | ELEVATION TOP OF HOLE 1077.31 TOC | Hole No. 00-DD-211

PROJECT Howard Hanson Dam Fish Bypass | INSTALLATION | SHEET 2 OF SHEETS

ELEVATION a	DEPTH b	LEGEND c	CLASSIFICATION OF MATERIALS (Description) d	% CORE RECOVERY e	BOX OR SAMPLE NO. f	REMARKS (Drilling time, water loss, depth of weathering, etc., if significant) g
1077.3	100		rough			
			thin zone Porphyritic Andisite	100 78	Q	
			rough ANDESITE BRECCIA		8	
			rough	98 77.6	R	
			rough			
	110		rough slightly rough			
			rough	100 66	S	3A 58/66 3B 34/33
			thin rubble zone slightly rough		9	
			rough 117.8-118.5 porphyritic matrix	100 72	T	
	120		Rubble			
			Porphyritic Andesite, dk green to black matrix white medium to coarse clasts, hard to moderately hard, unweathered ANDESITE BRECCIA red brown coarse clasts in dk green fine matrix, unweathered, moderately hard to hard healed fracture 129. Porphyritic Andesite, red brown to dk green fine matrix, white medium to coarse clasts, unweathered, moderately hard to hard	100 66	U	10 2A 68/62 2B 40/30
				100 68	V	
	130				11	
			Intensely fractured rubble	100 44	W	1A 13.7/42 1B 9.0/20
			ANDESITE BRECCIA red brown, unweathered moderately hard to hard	100 74	X	
1037.3	140					TD - 140'

Core Box #	Interval
1	30.5 - 40.5
2	40.5 - 50.8
3	50.8 - 61.2
4	61.2 - 71.2
5	71.2 - 81.2
6	81.2 - 91.7
7	91.7 - 101.7
8	101.7 - 112.0
9	112.0 - 122.4
10	122.4 - 131.8
11	131.8 - 140.0

1. PROJECT: Howard Hanson Dam Fish Bypass
2. LOCATION (Coordinates or Station): N 102,349.509 E 1,763,443.787
3. DRILLING AGENCY: Ruen Drilling
4. HOLE NO. (As shown on drawing title and file number): 00-DD-212
5. NAME OF DRILLER: Mike Edmundson
6. DIRECTION OF HOLE: ☒ VERTICAL ☐ INCLINED _____ DEG. FROM VERT.
7. THICKNESS OF OVERBURDEN: 28.1'
8. DEPTH DRILLED INTO ROCK: 126.9'
9. TOTAL DEPTH OF HOLE: 155'
10. SIZE AND TYPE OF BIT: Longyear Series 6 HQ
11. DATUM FOR ELEVATION SHOWN (TBM or MSL): NAD 27 (N. Zone) NGUD 29
12. MANUFACTURER'S DESIGNATION OF DRILL: Christensen CF 1500
13. TOTAL NO. OF OVER-BURDEN SAMPLES TAKEN: DISTURBED 6; UNDISTURBED
14. TOTAL NUMBER CORE BOXES: 12
15. ELEVATION GROUND WATER
16. DATE HOLE: STARTED 3/18/00; COMPLETED 3/20/00
17. ELEVATION TOP OF HOLE: 1180.75 TOC
18. TOTAL CORE RECOVERY FOR BORING: %
19. SIGNATURE OF INSPECTOR: John Wooten

ELEVATION a	DEPTH b	LEGEND c	CLASSIFICATION OF MATERIALS (Description) d	% CORE RECOVERY REC.	% CORE RECOVERY RQD	BOX OR SAMPLE NO. f	REMARKS (Drilling time, water loss, depth of weathering, etc., if significant) g
1180.8	0		SM-ML CL	100		SPT-A	TOC = Top of Casing Ground Surface = El. 1181.47
			ML	45		SPT-B	
	10		SW-SM SM	90		SPT-C	
			ML SM or SC	100		SPT-D	
	20		SW-SM SM	80		SPT-E	
			SM or SC	100		SPT-F	
1152.7			28.1' Top of Bedrock				
	30		Lt. brown Andesite breccia, moderately weathered, moderately soft, coarse in fine matrix	100	66.7	A	Box 1
			28.9' Grey ANDESITE BRECCIA, unweathered, moderately hard to hard, moderately fractured	98	79.6	B	
			rough	100	98	C	
	40		rough	98	100	D	Box 2
				100	100	E	
	50		rough	96	100	F	Box 3
			slightly rough	100	94	G	
	60		rough some rubble				
			rough	100	74	H	Box 4
			rough				
			rough	100	100	I	
	70		rough				
			rough	100	90	J	Box 5
			rough	100	98	K	
			rough				
	80		rough	100	85.7	L	
			rough	100	100	M	
			rough				Box 6
			rough	100	88	N	
	90		rough				
			rough				
			rough rubble	98	87.8	O	Box 7
			rough				
			slightly rough				
1080.8	100		slightly smooth Gradational Grey green infilling changing to red-brown ANDESITE BRECCIA	100	89	P	

WATER PRESSURE TESTING

	GPM/PSI
8A	5.2/40
8B	3.6/20
7A	5.6/39
7B	3.2/17
6A	4.6/56
6B	1.0/28
5A	1.6/60
5B	0.8/30

DRILLING LOG (Cont Sheet) | ELEVATION TOP OF HOLE 1180.75 TOC | Hole No. 00-DD-212

PROJECT: Howard Hanson Dam Fish Bypass | INSTALLATION | SHEET 2 OF 2 SHEETS

ELEVATION a	DEPTH b	LEGEND c	CLASSIFICATION OF MATERIALS (Description) d	% CORE RECOV-ERY e	BOX OR SAMPLE NO. f	REMARKS (Drilling time, water loss, depth of weathering, etc., if significant) g
1080.8	100		healed fracture Gradational Dk green-red brown Andesite, porphyritic, moderately hard to hard, unweathered, moderately fractured	100 88	Q	
			healed fractures	100 82	R	Box 8
	110		Rubble	100 60	S	4A 5.6/62 4B 30/31
				100 84	T	Box 9
	120		healed rubble zone — relatively finer Gradational Andesite Breccia dk green fine matrix red brown coarse clasts, moderately hard to hard, unweathered moderately fractured	100 80	U	3A 3.8/60 3B 2.6/30
			Grades to Andesite, porphyritic, dk green unweathered, hard to moderately hard moderately fractured	100 84	V	Box 10
	130		ANDESITE BRECCIA dk green, unweathered moderately hard to hard	100 98	W	
			136.5-139.3 Shear Zone Intensely fractured Rubble	97.5 17.9	X	Box 11 2A 9.8/62 2B 4.8/30
	140		Rubble	100 62	Y	
				100 50	Z	
			Grades	100 68	AA	Box 12 6.0/60 3.4/30
	150		Rubble			
			Rubble rough rough slightly rough	100 62	AB	1A 1B
1025.8						TD - 155'

1. PROJECT: Howard Hanson Dam Fish Bypass
2. LOCATION (Coordinates or Station): N102513.295 E1,763,356.281
3. DRILLING AGENCY: Ruen Drilling
4. HOLE NO. (As shown on drawing title and file number): 00-DD-213
5. NAME OF DRILLER: Mike Edmundson
6. DIRECTION OF HOLE: ☒ VERTICAL ☐ INCLINED _____ DEG. FROM VERT.
7. THICKNESS OF OVERBURDEN: 2.1
8. DEPTH DRILLED INTO ROCK: 142.9
9. TOTAL DEPTH OF HOLE: 145'
10. SIZE AND TYPE OF BIT: Longyear Series 6 HQ
11. DATUM FOR ELEVATION SHOWN (TBM or MSL): NAD 27 (N. Zone) NGVD 29
12. MANUFACTURER'S DESIGNATION OF DRILL: Christensen CF 1500
13. TOTAL NO. OF OVERBURDEN SAMPLES TAKEN: DISTURBED —; UNDISTURBED —
14. TOTAL NUMBER CORE BOXES: 14
15. ELEVATION GROUND WATER:
16. DATE HOLE: STARTED 3/30/00; COMPLETED 3/31/00
17. ELEVATION TOP OF HOLE: 1,157.33 TOC
18. TOTAL CORE RECOVERY FOR BORING: %
19. SIGNATURE OF INSPECTOR: John Stowe

ELEVATION a	DEPTH b	LEGEND c	CLASSIFICATION OF MATERIALS (Description) d	% CORE RECOVERY e	BOX OR SAMPLE NO. f	REMARKS (Drilling time, water loss, depth of weathering, etc., if significant) g
1157.3	0		Gravel, road fill	100 0	A	
1155.2	2.1		Lt brown ANDESITE BRECCIA, moderately weathered, moderately hard	96.7 48.3	B	
			2.2' Grey ANDESITE BRECCIA, unweathered, moderately hard to hard	100 69.2	C	1
	10		2.6-3.4' Intensely fractured rough healed fracture coarser rough rough rough tr. clay rough rough rough tr. clay sl. rough sl. smooth healed fracture slickensides developing rough sl. rough rough rubble rough rubble, rough 23.3-23.5 rubble, Shear Zone 23.4-23.5 rubble rough 25.7-26.7 rubble Shear Zone rough-sl. rough clay & sand infilling	100 52	D	
				81.8 44.4	E	
				100 74	F	2
	20			82.5 0	G	
				90.5 13	H	
				66.7 22.2	I	3
	30		rubble sl. rough qtz infilled v. fracture 31.6-32.1 Rubble, friable, rough rough healed v. fracture slickensides developing 33.3-34.5 rubble, rough Shear Zone 34.5-35.1 rough 35.9-36.3 rubble, rough 37.6-37.8 rubble, friable, rough 38.3-39 Rubble, rough-sl. rough finer 39.3-40.8 Shear Zone, rubble, rough to sl. rough	68.6 0	J	
				100 31.8	K	4
				100 0	L	
	40		tr. clay Shear Zone 42.7-43 Intensely fractured, Rubble 43.4-43.5	91 0	M	
			44.7-45.6 Alteration or highly weathered moderately hard but friable Shear Zone rough rough tr. clay 49-49.2 Rubble	100 20	N	5
				100 0	O	
	50		rough rough healed fractures Grey to grey green, ANDESITE BRECCIA, unweathered, moderately hard to hard rough rough	100 62.7	P	
			sl. smooth healed fracture Dk grey ANDESITE, unsl. smooth weathered, moderately hard healed fractures to hard sl. rough	100 58	Q	6
			sl. rough healed v. fracture			
	60		sl. rough healed diagonal fracture sl. rough sl. rough rough sl. rough-rough healed fractures	100 32	R	
			healed fractures rough sl. rough sl. smooth 67.4 grey to grey green ANDESITE	100 72.9	S	7
			sl. rough BRECCIA, unweathered, moderately hard to hard, rough qtz infilled diagonal fracture			
	70		rough 71-1cm aperture rough 71-Dk grey to Dk green, PORPHYRITIC ANDESITE, unweathered, moderately hard to hard	100 50	T	8
				100 0	U	
			rough rough rough coarse inclusions	100 74	V	
	80		rough in 74-81 ANDESITE, dk grey-dk green unweathered, moderately hard to hard rough tr. clay/sand 81- Grey ANDESITE BRECCIA, unweathered, moderately hard to hard	100 93.6	W	9
			rough rough rough very friable rough sl. smooth healed fracture healed rubble zone rough qtz filled fracture 1cm aperture	100 35.3	X	
	90			100 64.7	Y	
			rough Grey, PORPHYRITIC ANDESITE, rough to sl. rough unweathered, moderately hard to hard, medium to coarse in fine matrix	100 0	Z	10
1057.3	100		Rubble zone, friable rough friable			

WATER PRESSURE TESTING GPM/PSI

9A	2.6/36	
9B	1.4/18	
8A	3.5/52	
8B	2.6/26	
7A	5.8/39	
7B	3.2/17	
6A	1.0/56	
6B	0.4/28	
5A	0.6/60	
5B	0.4/30	
4A	1.0/72	
4B	0.4/36	

TOC = TOP OF CASING
GROUND SURFACE = EL 1158.29

DRILLING LOG (Cont Sheet) | ELEVATION TOP OF HOLE 1157.33 | Hole No. 00-DD-213

PROJECT: Howard Hanson Dam Fish Bypass | INSTALLATION | SHEET 2 OF 2 SHEETS

ELEVATION a	DEPTH b	LEGEND c	CLASSIFICATION OF MATERIALS (Description) d	% CORE RECOVERY e	BOX OR SAMPLE NO. f	REMARKS (Drilling time, water loss, depth of weathering, etc., if significant) g
1057.3	100		sl. smooth	98 91.8	AA	
			rough			
			healed fractures			11
			rough			
			rough	100 42	AB	
	110		rough			
			rough			
			rough	100 66	AC	
			rough			12
			rough			
			sl. smooth			
			rough incomplete fracture	100 48	AD	3A 4.2/90 3B 2.2/45
	120		rough			
			rough 121.1-124.9 porphyritic fine matrix w/coarse inclusions	98 0	AE	
			Intensely fractured, Rubble slickensides, poorly developed clay sand infilling 124.2-126.3			13
			rough	100 26	AF	2A 2.9/72 2B 0.8/36
			rough			
	130		rough			
			rough to sl. rough			
			rough	100 66	AG	
			rough			
			rough			14
			rough phenocrysts fine downward	100 90	AH	
	140		rough slickensides forming, not well developed			
			rough			
			rough	92 91.3	AI	1A 5.8/76 1B 0.8/38
1012.3			TD-145'			

Hole No. 00-DD-214

DRILLING LOG

DIVISION

INSTALLATION

SHEET 1 OF 2 SHEETS

1. PROJECT: Howard Hanson Dam Fish Bypass
2. LOCATION (Coordinates or Station): N 102,387.347 E1,163,456.136
3. DRILLING AGENCY: Ruen Drilling
4. HOLE NO. (As shown on drawing title and file number): 00-DD-214
5. NAME OF DRILLER: Mike Edmundson
6. DIRECTION OF HOLE: ☒ VERTICAL ☐ INCLINED _____ DEG. FROM VERT.
7. THICKNESS OF OVERBURDEN: ~0.2'
8. DEPTH DRILLED INTO ROCK: 169.8'
9. TOTAL DEPTH OF HOLE: 170.0'
10. SIZE AND TYPE OF BIT: Longyear Series 6 HQ
11. DATUM FOR ELEVATION SHOWN (TBM or MSL): NAD 27 (N. Zone) NGVD 29
12. MANUFACTURER'S DESIGNATION OF DRILL: Christensen CF 1500
13. TOTAL NO. OF OVERBURDEN SAMPLES TAKEN: DISTURBED —; UNDISTURBED —
14. TOTAL NUMBER CORE BOXES: 16
15. ELEVATION GROUND WATER
16. DATE HOLE: STARTED 3/9/00; COMPLETED 3/11/00
17. ELEVATION TOP OF HOLE: 1,165.31 TOC
18. TOTAL CORE RECOVERY FOR BORING: %
19. SIGNATURE OF INSPECTOR: John Glover

ELEVATION	DEPTH b	LEGEND c	CLASSIFICATION OF MATERIALS (Description) d	% CORE RECOVERY e	REC.	RQD	BOX OR SAMPLE NO. f	REMARKS (Drilling time, water loss, depth of weathering, etc., if significant) g
1165.3								Overburden ~0.2'
1165.1			0.2' Overburden 0.6' Mottled light brown/dark brown BRECCIA Moderately to highly weathered moderately hard, moderately to intensely fractured 0.8' Grey to Grey-green ANDESITE BRECCIA unweathered medium to coarse grains in fine matrix, moderately hard to hard, moderately fractured	100	89.6		A	TOC = TOP OF CASING GROUND SURFACE EL 1165.52
				100	60		B	Box 1
	10			96	81.3		C	
			rough	100	96		D	Box 2
	20		rough					
			rough	98	98		E	
			rough	98	100		F	Box 3
	30			100	100		G	
			rough	98	100		I	Box 4
	40		rough	100			H	
			rough	100	100		J	Box 5
	50		rough rough rubble Inclusions decreasing in size and number Grading into Dark Green ANDESITE, unweathered, hard moderately fractured	100	76		K	
			healed fracture filled with red-brown claystone	100			L	Box 6
	60		Intensely fractured 60.5-61.2 friable Intensely fractured 61.8-62.4 Dark Green ANDESITE BRECCIA, red brown claystone infilling multiple fractures hard, unweathered, moderately fractured	100			M	
			Dark green, traces of red-brown infilling	100	92		N	Box 7
	70			100	80		O	
			76.9-78.9 Intensely Fractured	100	25.6		P	Box 8
	80		79.4-79.9 Intensely fractured	100	61.5		Q	
			84.2-86.4 Intensely fractured	100	30.8		R	Box 9
	90		88.5-90 Intensely fractured, rubble	100	41.1		S	
			porphyritic veinlets 92.5-94.4 Intensely fractured	100	74		T	
10653	100		98.8-99.8 Intensely fractured					

11A 20/25.3
11C 10/18.2
10A 22.6/22
10B 10.8/8
9A 8.0/32
9B 3.4/18
8C 11.2/47
8D 2.6/22
7A 2.2/62
7B 1.0/30
6A 2.0/40
6B 1.0/20

DRILLING LOG (Cont Sheet) | ELEVATION TOP OF HOLE 1065.31 TOC | Hole No. 00-DD-214

PROJECT: Howard Hanson Dam Fish Bypass | INSTALLATION | SHEET 2 OF 2 SHEETS

ELEVATION a	DEPTH b	LEGEND c	CLASSIFICATION OF MATERIALS (Description) d	% CORE RECOVERY e	BOX OR SAMPLE NO. f	REMARKS (Drilling time, water loss, depth of weathering, etc., if significant) g
1065.3	100		Intensely fractured	100 12.5	U	BOX 10
			102.9 - 106 Intensely fractured rubble	100 0	V	
				100 72.5	W	BOX 11
	110		110 - 110.5 Intensely fractured 109.5 Andesite Breccia, coarse in fine matrix, unweathered, moderately hard, moderately fractured	98 100	X	SA 16/60 SB 1.0/25
			grades into Andesite, no inclusions	100 86	Y	
	120		118.9 - 119.7 Intensely fractured, rubble			BOX 12
			ANDESITE BRECCIA, grey-green, unweathered moderately hard to hard, moderately fractured	100 96	Z	4A 1.6/60 4B 0.6/30
			ANDESITE, dk green, unweathered, hard to moderately hard, moderately fractured	100 92	AA	
			128.5 - 130 healed fractures			BOX 13
	130			100 94	AB	
			ANDESITE BRECCIA grey, coarse in fine matrix, unweathered, moderately hard, moderately fractured	100 92	AC	1.0/92 0/20
	140		healed fracture			BOX 14
			142 - 143.5 Intensely fractured	100 32	AD	3A 3B
				100 80	AE	
			ANDESITE, porphyritic, dk green, fine-medium grain, moderately hard to hard, unweathered, moderately fractured	100 100	AF	BOX 15
	150			100 70	AG	2A 23.6/20 2B 12.4/10
						BOX 16
	160		Rubble	100 74	AH	
				100 100	AI	1A 21.4/16 1B 19.3/12
995.3	170					TD - 170'

DRILLING LOG

1. PROJECT: Howard Hanson Dam - AWS- Fish Passage
2. LOCATION (Coordinates or Station): N 102,405 E 1,763,450
3. DRILLING AGENCY: Andrew Well Drilling
4. HOLE NO. (As shown on drawing title and file number): ØØ - RD - 215
5. NAME OF DRILLER: Alfred High
6. DIRECTION OF HOLE: [X] VERTICAL [ ] INCLINED _____ DEG. FROM VERT.
7. THICKNESS OF OVERBURDEN: 1'
8. DEPTH DRILLED INTO ROCK: 164'
9. TOTAL DEPTH OF HOLE: 165'
10. SIZE AND TYPE OF BIT: 12"/25' 8"/135' 6"/165'
11. DATUM FOR ELEVATION SHOWN (TBM or MSL): NAD 27 (North Half)
12. MANUFACTURER'S DESIGNATION OF DRILL: Air Rotary Ingersol Rand - IRT4W
13. TOTAL NO. OF OVER-BURDEN SAMPLES TAKEN: DISTURBED — UNDISTURBED —
14. TOTAL NUMBER CORE BOXES: —
15. ELEVATION GROUND WATER:
16. DATE HOLE: STARTED 18 May 00 COMPLETED 24 May 00
17. ELEVATION TOP OF HOLE: TOC (4") 1165.04
18. TOTAL CORE RECOVERY FOR BORING: — %
19. SIGNATURE OF INSPECTOR: S Hall

ELEVATION a	DEPTH b	LEGEND c	CLASSIFICATION OF MATERIALS (Description) d	% CORE RECOVERY e	BOX OR SAMPLE NO. f	REMARKS (Drilling time, water loss, depth of weathering, etc., if significant) g
1165.04			Refer to core drill log 96-DD-87 for detailed rock description			Location - center of gravel access road 15.31' from rebar hub 11.40' from center of well 87 21.25' " " " " 214
	10		Return color light gray			Begin 12" reaming @ 1235 (12" tricone bit) smooth drilling Begin 8" reaming @ 1510 to straighten 12" hole end 8" @ 1550 Water @ 22' 18 May 00 1630
	20					19 May 00 Water level = 1.5' BGS Begin 12" reaming @ 1025 drilling a bit jerky, but mostly smooth. Stop drilling @ 1105 to remove stability plate Resume drilling @ 1248 Finish to 25' @ 1327
	30					
	40		Return color change to light brown @ ~37'			Begin drilling 8" @ 1440 (8" hammer bit) to 39' End @ 1448
	50		Return color change to gray @ ~52' Return color change to brown @ ~54'			Begin 39'-64' run @ 1500 w/ 8" hammer bit drilling smooth
	60		Return color change to gray @ ~57' Return color change to brown @ ~62'			End run @ 1522
	70		Return color change to gray @ ~74'			Begin 64'-89' run @ 1528 w/ 8" hammer bit
	80		Return color change to brown @ ~79'			drilling smooth
	90		Return color change to gray @ ~87'			End run @ 1551 Begin 89'-114' run @ 1555 w/ 8" hammer bit
	100					

DRILLING LOG (Cont Sheet) | ELEVATION TOP OF HOLE 1165.04 | Hole No. 00-RD-215

PROJECT: HHD-AWS-Fish Bypass Facility | INSTALLATION | SHEET OF 2 SHEETS 2

ELEVATION a	DEPTH b	LEGEND c	CLASSIFICATION OF MATERIALS (Description) d	% CORE RECOV-ERY e	BOX OR SAMPLE NO. f	REMARKS (Drilling time, water loss, depth of weathering, etc., if significant) g
	100					drilling smooth
	110		Return color changes to brown-gray @110			5/24/00 Top of grout inside casing @ 112'
						End run @ 1614
						Begin 114'-135' ranc 1621 w/ 8" hammer bit
	120		Return color changes to gray @ ~124'			
	130		Return color changes to brown gray @~129'			
			Return color changes to gray @ ~133'			End 8" drilling @135' 19 May 00 1635
						20 May 00 Water level = 8' BGS
	140		Return is dry, tailings are gray Andesite			24 May 00
						Begin drilling 6" 1413 to 155'
	150					
						End run @ 155' - 1432
						Begin 155'-165' @ 1434
	160		BOH 165'			165' @ 1445
	170					

Hole No. 00-DD-216

DRILLING LOG | DIVISION | INSTALLATION | SHEET 1 OF 2 SHEETS

1. PROJECT: Howard Hanson Dam Fish Bypass
2. LOCATION (Coordinates or Station): N102,275.519 E1,763,583.446
3. DRILLING AGENCY: Ruen Drilling
4. HOLE NO. (As shown on drawing title and file number): 00-DD-216
5. NAME OF DRILLER: Mike Edmundson
6. DIRECTION OF HOLE: ☒ VERTICAL ☐ INCLINED _____ DEG. FROM VERT.
7. THICKNESS OF OVERBURDEN: 22.4'
8. DEPTH DRILLED INTO ROCK: 122.6
9. TOTAL DEPTH OF HOLE: 145'
10. SIZE AND TYPE OF BIT: Longyear Series 6 HQ
11. DATUM FOR ELEVATION SHOWN (TBM or MSL): NAD 27 (N. Zone) NGVD 29
12. MANUFACTURER'S DESIGNATION OF DRILL: Christensen CF 1500
13. TOTAL NO. OF OVERBURDEN SAMPLES TAKEN: DISTURBED —; UNDISTURBED —
14. TOTAL NUMBER CORE BOXES: 12
15. ELEVATION GROUND WATER:
16. DATE HOLE: STARTED 3/27/00; COMPLETED 3/28/00
17. ELEVATION TOP OF HOLE: 1172.15 TOC
18. TOTAL CORE RECOVERY FOR BORING: %
19. SIGNATURE OF INSPECTOR: Todd Hoover

ELEVATION (a)	DEPTH (b)	LEGEND (c)	CLASSIFICATION OF MATERIALS (Description) (d)	% CORE RECOVERY (e)	BOX OR SAMPLE NO. (f)	REMARKS (Drilling time, water loss, depth of weathering, etc., if significant) (g)
1172.2	0					DD-216 overburden not logged so a second hole was drilled within 5 ft of the first to log overburden. DD-216A shows on this log
	10		To be added			WATER PRESSURE TESTING GPM/PSI
	20		22.4 Top of Bedrock	REC. RQD		
1149.8			rough ANDESITE BRECCIA, grey to grey green, moderately weathered (22.4' rough 22.6') to unweathered, moderately hard to hard, moderately fractured.	100 88.5	A	
				0 —	B	1 — No recovery, gravel blocked bit
	30		Rubble mod. weathered sl. smooth rough rough rough slightly weathered zone w/clay	94 51.1	C	
			rough	100 52	D	2
			rough rough			
	40		slickensides rough rubble sl. weathered rough rubble w/clay rough rough	98 40.8	E	3
			thin porphyritic zone rough	100 64	F	
	50		rubble thin porphyritic zone rough rough	98 65.3	G	
			rough rough rough rough rough	100 88	H	4
	60		rough some rubble rough rough	100 88	I	
			rough rubble rubble mod. weathered	100 78	J	5
	70		rough rough rough rough	100 50	K	
			rough	100 88	L	6
	80		rough Rubble unweathered to mod. weathered rough rough rubble sl. weathered to mod. weathered	100 70	M	
			rough rough	100 92	N	7
	90		rough	100 78	O	
			rough rough rough rough rough	100 88	P	8
1072.2	100		rough			

7A 2.8/32 7B 1.6/16
6A 0.6/50 6B 0/25
5A 24.2/42 5B 15.2/22
4A 3.6/50 4B 2.0/50

TOC = TOP OF CASING
Ground Surface Elevation 1172.57

DRILLING LOG (Cont Sheet)	ELEVATION TOP OF HOLE 1172.15 TOC	Hole No. 00-DD-216
PROJECT Howard Hanson Dam Fish Bypass	INSTALLATION	SHEET 2 OF 2 SHEETS

ELEVATION a	DEPTH b	LEGEND c	CLASSIFICATION OF MATERIALS (Description) d	% CORE RECOVERY RECORD	BOX OR SAMPLE NO. f	REMARKS (Drilling time, water loss, depth of weathering, etc., if significant) g
1072.2	100		rough rough sl. rough sl. rough Gradational PORPHYRITIC ANDESITE, dk green to dk grey, unweathered, mod. hard to hard, mod. fractured	100 78	Q	
			fine-medium grains in fine matrix	100 60	R	9
	110		108.3-109.6 rubble unweathered to moderately weathered rubble sl. rough mod. weathered rubble rough sl. to mod. weathered rubble rough mod. weathered	100 54	S	
			rough healed brecciated zone	100 50	T	10
	120		rough rough rough sl. rough healed rubble zone	100 82	U	
			rubble rough sl. weathered rough healed fracture	100 72	V	11
	130		rubble sl. rough to sl. smooth unweathered to sl. weathered rough rough mod. weathered 131' ANDESITE BRECCIA grey green, unweathered, mod. hard to hard	100 50	W	
			rubble rough sl. weathered slicks rough Gradational PORPHYRITIC ANDESITE dk green to grey green, unweathered, mod. hard to hard	92 39.1	X	12
	140		rubble rough mod. weathered rough rough healed fracture zone 141' ANDESITE BRECCIA grey green medium to coarse in fine matrix, unweathered, mod. hard to hard rough	100 70	Y	
1027.2			TD- 145'			
	150					

Core Box #	Interval
1	22.4-38.5
2	38.5-48.5
3	48.5-59.5
4	59.5-69.5
5	69.5-79.7
6	79.7-90.0
7	90.0-100.7
8	100.7-110.0
9	110.0-120.5
10	120.5-131.3
11	131.3-141.0
12	141.0-145.0

1A 24.4/30 2A 24.2/30 3A 4.8/66
1B 15.0/15 2B 15/15 3B 2.0/33

OF 2 SHEETS

1. PROJECT: Howard Hanson Dam Fish Bypass	10. SIZE AND TYPE OF BIT: Longyear Series 6 HQ
2. LOCATION (Coordinates or Station): N 102,550.224 E 763,334.772	11. DATUM FOR ELEVATION SHOWN (TBM or MSL): NAD27 (N. Zone) NGVD29
3. DRILLING AGENCY: Ruen Drilling	12. MANUFACTURER'S DESIGNATION OF DRILL: Christensen CF 1500
4. HOLE NO. (As shown on drawing title and file number): 00-DD-217	13. TOTAL NO. OF OVER-BURDEN SAMPLES TAKEN: DISTURBED — UNDISTURBED —
5. NAME OF DRILLER: Mike Edmundson	14. TOTAL NUMBER CORE BOXES: 15
6. DIRECTION OF HOLE: ☒ VERTICAL ☐ INCLINED ____ DEG. FROM VERT.	15. ELEVATION GROUND WATER
	16. DATE HOLE: STARTED 04/03/00 COMPLETED 04/04/00
7. THICKNESS OF OVERBURDEN: 0	17. ELEVATION TOP OF HOLE: 1164.86 TOC
8. DEPTH DRILLED INTO ROCK: 150'	18. TOTAL CORE RECOVERY FOR BORING: %
9. TOTAL DEPTH OF HOLE: 150'	19. SIGNATURE OF INSPECTOR: John G Glover

ELEVATION a	DEPTH b	LEGEND c	CLASSIFICATION OF MATERIALS (Description) d	% CORE RECOVERY REC • RQD	BOX OR SAMPLE NO. f	BOX	REMARKS (Drilling time, water loss, depth of weathering, etc., if significant) g
1164.9	0		Lt grey PORPHYRITIC ANDESITE, medium to coarse grains in fine matrix, moderately hard to hard, unweathered, moderately fractured 0.5-0.6 rubble Intensely fractured	96 64.6	A	1	TOC = TOP OF CASING (4")
			rough	100 34	B		WATER PRESSURE TESTING GPM/PSI
	10		rough healed fracture rough healed vertical fracture rough rough Intensely fractured 115.5-116.3	94 78.7	C	2	Ground Surface Elevation 1165.63
			rough rough rubble zone	100 56	D		
	20		healed fracture rough healed fracture rubble infilling 23.5 rough rough rough sl. rough rough	95.5 58.1	E	3	20.0/34 9.0/17
			healed diagonal fracture rough healed fracture rough - slightly rough	100 52.9	F		
	30		rough rough rough rough rough	96.2 84.3	G	4	9A 9B
			healed fracture slightly rough friable healed fractures	100 76	H		
	40		sl. rough rough rough rough rough	100 80.4	I	5	6.6/34 5.0/27
			rough rough	98 73.5	J		8A 8B
	50		sl. smooth rough	100 71.7	K		
			thin rubble zone	~~100 100~~	~~L~~	6	
			rough rough healed fracture rough	98 75.5	M		7.6/44 4.8/24
	60		rough rough rough rough slickensides poorly developed	100 78	N	7	7A 7B
			rough slickensides poorly developed rough sl. rough slickensides developing rough sl. rough	100 52	O		
	70		rough rough healed fracture rough	96 83.3	P	8	7.8/54 4.2/27
			rough rough rough rough healed fracture	100 56	Q		6A 6B
	80		rough infilled qtz vein Grey ANDESITE, fine, unweathered, moderately hard to hard, moderately fractured rough rubble (thin)	100 54	R	9	
			rough rough rough rough rough	100 48	S		2.2/74 0.8/37
	90		rough rough thin rubble zone rough grading to dk green	100 76	T	10	5A 5B
			thin rubble zone healed fracture rough healed fractures grading to lt. grey	100 64	U		
1064.9	100		rough healed and incomplete fractures				

ENG FORM 1836 MAR 71 PREVIOUS EDITIONS ARE OBSOLETE.

PROJECT: HH Dam Fish Bypass

HOLE NO. 00-DD-217

DRILLING LOG (Cont Sheet) | ELEVATION TOP OF HOLE 1164.86 TOC | Hole No. 00-DD-217

PROJECT Howard Hanson Dam Fish Bypass | INSTALLATION | SHEET 2 OF 2 SHEETS

ELEVATION a	DEPTH b	LEGEND c	CLASSIFICATION OF MATERIALS (Description) d	% CORE RECOV. e	BOX OR SAMPLE NO. f	REMARKS (Drilling time, water loss, depth of weathering, etc., if significant) g
1064.9	100		Grey green ANDESITE, fine w/coarse inclusions unweathered, moderately hard to hard, moderately fractured sl. rough	100 60	V	
			rough			
			rough			
			rough			
			rough	100 42	W	4A 88/5.8 4B 44/1.0
	110		rough			
			slightly rough			
			rough gradational grey green PORPHYRITIC ANDESITE, unweathered, moderately hard to hard, moderately fractured	98 79.6	X	
			rough			
			rough			
				100 82	Y	
			rough			
	120		brecciated zone 119-122.6			
						3A 80/5.4 3B 40/0.6
			grades back into DK green PORPHYRITIC ANDESITE, medium to coarse (sparse) phenocrysts in fine matrix, unweathered moderately hard to hard, moderately fractured	100 72	Z	
			rough	100 58	AA	
			healed vertical fracture coarse phenocrysts decrease w/depth			
	130		rough			
			rough			
			rough	100 60	AB	
			rough infilled fracture grades back into porphyritic Andesite dk grey to black			
			rough	100 53.8	AC	
			rough			
			rough	100 37.5	AD	
	140		rough			
			141.6-144 Intensely fractured Shear Zone	100 0	AE	
				100 60	AF	
			Lt grey Porphyritic ANDESITE, unweathered moderately hard to hard, moderately fractured			
				100 0	AG	
						1A 5.0/60 1B 3.2/30 2A 5.0/58 2B 3.2/29
1014.9	150		TD - 150'			

Core Box #	Interval
1	0 - 10.0
2	10.0 - 20.7
3	20.7 - 30.9
4	30.9 - 41.7
5	41.7 - 52.3
6	52.3 - 62.0
7	62.0 - 72.3
8	72.3 - 82.5
9	82.5 - 92.7
10	92.7 - 103.1
11	103.1 - 113.6
12	113.6 - 123.7
13	123.7 - 134.0
14	134.0 - 143.5
15	143.5 - 150.0

1. PROJECT: Howard Hanson Dam Fish Bypass

2. LOCATION (Coordinates or Station): N 102,573.290 E 1,763,304.205

3. DRILLING AGENCY: Ruen Drilling

4. HOLE NO. (As shown on drawing title and file number): 00-DD-218

5. NAME OF DRILLER: Mike Edmundson

6. DIRECTION OF HOLE: ☒ VERTICAL ☐ INCLINED _____ DEG. FROM VERT.

7. THICKNESS OF OVERBURDEN: 2.1

8. DEPTH DRILLED INTO ROCK: 147.9

9. TOTAL DEPTH OF HOLE: 150'

10. SIZE AND TYPE OF BIT: Longyear Series 6 HQ

11. DATUM FOR ELEVATION SHOWN (TBM or MSL): NAD 27 (N. Zone) NGVD 29

12. MANUFACTURER'S DESIGNATION OF DRILL: Christensen CF 1500

13. TOTAL NO. OF OVER-BURDEN SAMPLES TAKEN: DISTURBED —; UNDISTURBED —

14. TOTAL NUMBER CORE BOXES: 15

15. ELEVATION GROUND WATER:

16. DATE HOLE: STARTED 4/6/00; COMPLETED 4/7/00

17. ELEVATION TOP OF HOLE: 1165.07 TOC

18. TOTAL CORE RECOVERY FOR BORING: %

19. SIGNATURE OF INSPECTOR: John Goodhouse

ELEVATION a	DEPTH b	LEGEND c	CLASSIFICATION OF MATERIALS (Description) d	% CORE RECOVERY Rec.	RQD	BOX OR SAMPLE NO. f	REMARKS (Drilling time, water loss, depth of weathering, etc., if significant) g
1165.1	0		ROAD FILL Gravel 2.1 Top of Bedrock				TOC = TOP OF CASING (4")
1162.0			Grey ANDESITE, PORPHYRITIC, medium to coarse in fine matrix, unweathered, moderately hard to hard, moderately fractured	75.9	0	A	Box
			3.5' thin rubble zone	100	92	B	
	10		rough; rough; rubble 10.0-10.4 rough unweathered	100	76	C	1
			rough; rough; intensely fractured; rough	100	50	D	
	20		rough; rough; rough healed fracture; rough; rough; very rough; very rough slickensides developing	100	82	E	2
			rough; rough; healed fracture; rough slickensides forming; healed fracture; very rough; rough; rough; rough; healed vertical fracture; rough	100	62	F	
	30			100	78	G	3
				100	94	H	
	40		rough healed fracture; rough; rough	100	78	I	4
			rough; rough; rough to very rough healed fracture; rough; very rough to rough; rough	100	82	J	
	50			98	95.9	K	5
			rough; rough; rough; rough to very rough healed fracture; rough; rough; very rough healed vertical fracture; rough; rough to sl. rough; rough	100	90	L	6
	60			100	78	M	
				100	90	N	7
	70		rough; healed fracture; rough; rough; rough; Lt grey to grey green ANDESITE PORPHYRITIC, medium to coarse inclusions in fine matrix, some very large (cobble) unweathered, moderately hard to hard moderately fractured; rough	100	72	O	
				100	94	P	8
	80		Dk gray to black ANDESITE, PORPHYRITIC color change	100	62	Q	
			color change Dk green to dk grey	100	90	R	9
	90		rough; rough; rough; rough	100	46	S	
			rubble; rubble; rough	100	68	T	10
1065.1	100						

WATER PRESSURE TESTING / PSI / GPM

SA	7.2/30	
SB	4.6/18	
9A	4.8/32	
9B	3.0/16	
7A	4.5/40	
7B	2.6/20	
6A	0.2/60	
6B	0.0/30	
SA	1.4/72	
SB	0.6/130	

Ground Surface Elevation 1165.80

ENG FORM 1836 MAR 71 PREVIOUS EDITIONS ARE OBSOLETE. (TRANSLUCENT)

PROJECT

HOLE NO.

DRILLING LOG (Cont Sheet) | ELEVATION TOP OF HOLE 1165.07 TOC | Hole No. 00-DD-218

PROJECT: Howard Hanson Dam Fish Bypass | INSTALLATION | SHEET 2 OF 2 SHEETS

ELEVATION a	DEPTH b	LEGEND c	CLASSIFICATION OF MATERIALS (Description) d	% CORE RECOV-ERY e	BOX OR SAMPLE NO. f	REMARKS (Drilling time, water loss, depth of weathering, etc., if significant) g
1065.1	100		healed fractures	100 33.3	U	
			rough			
			rough			
			healed fractures	95 63	V	
			rough, broken on healed fracture			
			healed fractures	96 95.8	W	
	110		gradational change			
			108.8 - 109.8 healed fractures		11	
			green to grey-green ANDESITE, un-weathered, moderately hard to hard, moderately fractured	100 99	X	
			110.5 grades back to porphyritic ANDESITE			
			113.6 - 113.9 intensely fractured	100 90	Y	
			114.5 grades back to ANDESITE			
	120				12	
			porphyritic	100 80	Z	
			aphenitic	100 86	AA	
	130				13	
				100 92	AB	
			large qtz filled fracture 2cm very rough	86	AC	
			rough			
	140		rough		14	
			rough	100	AD	
			rough	100 100	AE	
			rubble			
			rough	100 74	AF	
			rough		15	
1015.1	150		rough			
			TD - 150'			

Core Box #	Interval
1	0 - 13.1
2	13.1 - 23.6
3	23.6 - 34.2
4	34.2 - 45.0
5	45.0 -
6	
7	65.0 - 76.1
8	76.1 - 86.3
9	86.3 - 96.9
10	96.9 - 107.2
11	107.2 - 117.3
12	117.3 - 127.6
13	127.6 - 137.7
14	137.7 - 147.8
15	147.8 - 150.0

REMARKS: 4A 4.0/80; 4B 0.6/40; 5.0/70; 5.0/35; 3A; 3B; 7.4/80; 5.0/40; 2A; 2B; 7.3/80; 4.2/40; 1A; 1B

HOLE NUMBER 01-RD-219

DRILLING LOG

DIVISION

INSTALLATION: Howard Hanson Dam

SHEET 1 OF 4 SHEETS

1. PROJECT: HHD-AWS Test Relief Well	10. SIZE AND TYPE OF BIT: 8" tri-cone
2. LOCATION (Coordinates or Station)	11. DATUM FOR ELEVATION SHOWN (TBM or MSL)
3. DRILLING AGENCY: Andrew Well Drilling	12. MANUFACTURER'S DESIGNATION OF DRILL: Ingersoll-Rand
4. HOLE NUMBER (As shown on drawing title and file number): 01-RD-219	13. TOTAL NUMBER OF OVERBURDEN SAMPLES TAKEN — DISTURBED: — UNDISTURBED: —
5. NAME OF DRILLER: Alfred High / James Reeder	14. TOTAL NUMBER OF CORE BOXES: —
6. DIRECTION OF HOLE ☒ VERTICAL ☐ INCLINED _____ DEGREES FROM VERTICAL	15. ELEVATION OF GROUNDWATER: ~165.0 7/16/01 / 58.05' 7/27/01
7. THICKNESS OF OVERBURDEN: 10.0'	16. DATE STARTED: 7/13/01 — DATE COMPLETED: 7/18/01
8. DEPTH DRILLED INTO ROCK: 240.0'	17. ELEVATION TOP OF HOLE
9. TOTAL DEPTH OF HOLE: 250.0'	18. SIGNATURE OF INSPECTOR: S Hess
LOCATION SKETCH/COMMENTS	SCALE: 1" = 40'

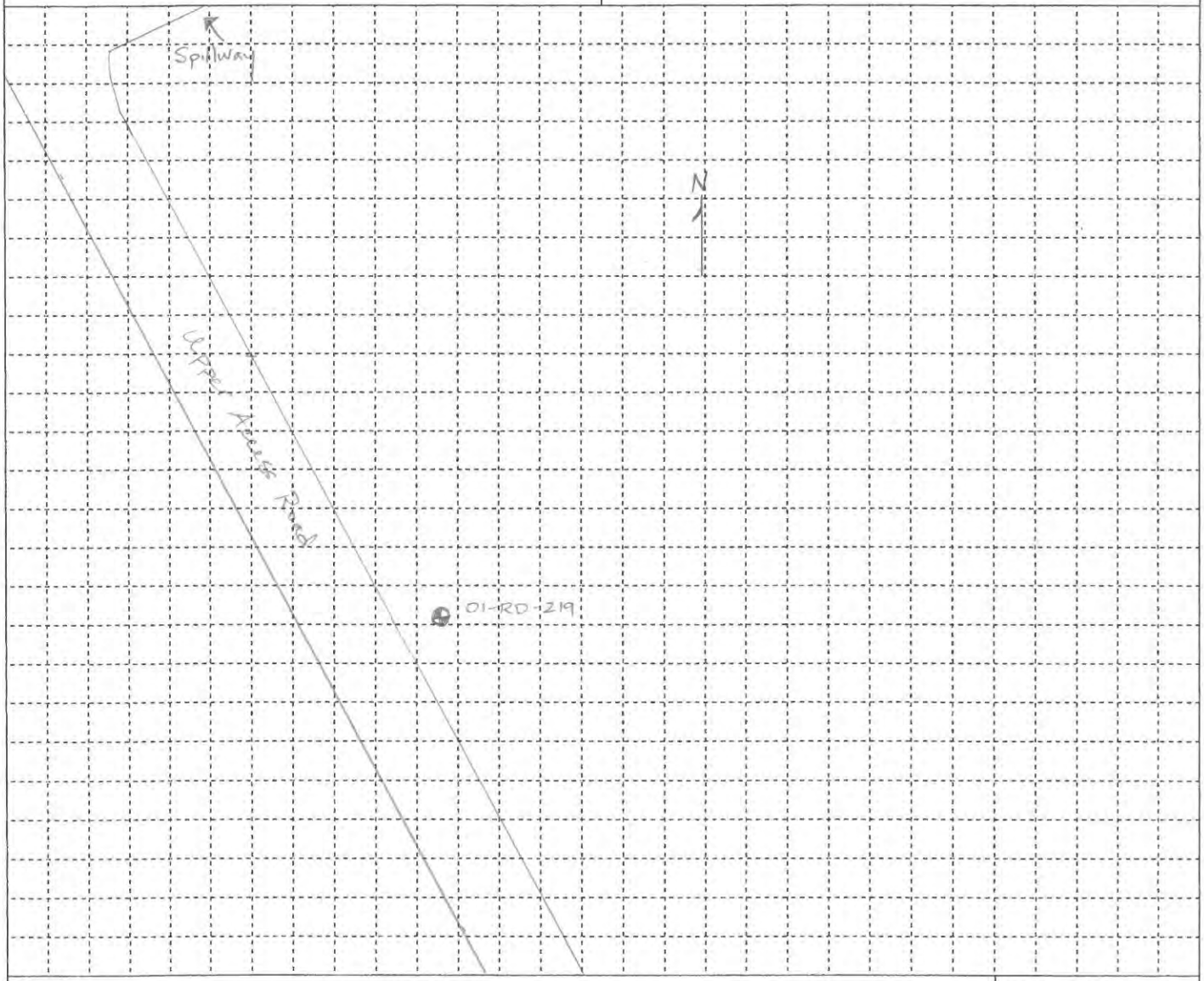

PROJECT: HHD-AWS Test Relief Well

HOLE NUMBER: 01-RD-219

DRILLING LOG (CONTINUATION SHEET)	ELEVATION TOP OF HOLE	HOLE NUMBER 01-RD-219
PROJECT HHD-AWS Test Relief Well	INSTALLATION HHD	SHEET 2 OF 4 SHEETS

ELEV (a)	DEPTH (b)	LEGEND (c)	CLASSIFICATION OF MATERIALS (Description) (d)	% CORE RECOVERY (e)	BOX OR SAMPLE Nº (f)	REMARKS (Drilling time, water loss, depth of weathering, etc. if significant) (g)
	0		GP-GM, silty sandy Gravel, brown, wet, loose [Fill]	7/13/01		Drilling open hole
			ML, clayey sandy Silt - clayey Silt w/sand, brown, damp-moist, sand is angular (med.-coarse grained).	Run A		drilling w/ water
	10		Basalt, blue-gray, hard, slightly weathered			
				7/16/01		material began caving; set 8" casing to 18.0' & grouted in place.
	20			Run B		
			Basalt weathered to clay			
	30		Basalt less weathered			
				0930hrs		
				0935hrs		slow, steady drilling
	40		color change to gray; Basalt more weathered	Run C		
			clay in returns			
	50		color change to red-gray-brown (Basalt more weathered)			
			color change to gray			
			color change to gray-green	1004hrs		
				1037hrs		▽ 58.05' on 27 Jul 01
	60			Run D		
	70		color change to gray			
			color change to gray-brown (tan)	1107hrs		
				1114 hrs		
	80		color change to brown			
			color change to gray	Run E		
	90		color change to gray-brown-red			
				1141hrs		
				1147hrs		
			color change to gray-brown	Run F		
	100					

ENG FORM 1836-A (ER 1110-1-1801)	PROJECT HHD-AWS Test Relief Well	HOLE NUMBER 01-RD-219

DRILLING LOG (CONTINUATION SHEET)	ELEVATION TOP OF HOLE	HOLE NUMBER 01-RD-219
PROJECT HHD-AWS Test Relief Well	INSTALLATION HHD	3 OF 4 SHEET SHEETS

ELEV (a)	DEPTH (b)	LEGEND (c)	CLASSIFICATION OF MATERIALS (Description) (d)	% CORE RECOVERY (e)	BOX OR SAMPLE Nº (f)	REMARKS (Drilling time, water loss, depth of weathering, etc. if significant) (g)
	100		Basalt, same as above, turning gray	Run F		drilling w/water
	110		color change to light gray	1214 hrs		stop to refill water truck
				1325 hrs		
	120		color change to gray-brown	Run G		
	130			1351 hrs		
	140		color change to gray			
	150					
	160			Run H		▽ ~105.0' on 7/16/01
	170					
	180					slow drilling, drilling producing alot of water
			Andesitic Breccia, hard, brown-gray.			
	190			1107 hrs 7/18/01		
	200			Run I		

DRILLING LOG (CONTINUATION SHEET)	ELEVATION TOP OF HOLE	HOLE NUMBER 01-RD-219
PROJECT HHD-AWS Test Relief Well	INSTALLATION HHD	4 OF 4 SHEET SHEETS

ELEV (a)	DEPTH (b)	LEGEND (c)	CLASSIFICATION OF MATERIALS (Description) (d)	% CORE RECOVERY (e)	BOX OR SAMPLE Nº (f)	REMARKS (Drilling time, water loss, depth of weathering, etc. if significant) (g)
	200					slow, steady drilling
				Run I		
	210		Andesite/Andesitic Breccia, hard, gray to gray-brown.			
				1137hrs		
				1223hrs		
	220					
				Run J		
	230					
				1247hrs		
				1252hrs		
	240		returns are light gray			
			returns are gray-brown	Run K		
				1309hrs		
	250		BOH @ 250 D'			

ENG FORM 1836-A (ER 1110-1-1801)	PROJECT HHD-AWS Test Relief Well	HOLE NUMBER 01-RD-219

LITHOLOGY DESCRIPTION

Approx. Coordinates: N: 102,470 E: 1,763,433

Depth (ft)	Lithology Description
	Brown, slightly silty to silty, sandy GRAVEL; moist; (Road Fill) GM/GP-GM.
1.9	Andesite: Moderate strength, light gray, aphanitic texture, moderately fractured, unweathered, abundant discontinuous calcite stringers, scattered slickensides. - 30 degree to 50 degree healed fractures with calcite from 5.6 to 6.5 feet.
7.3	Andesite: Moderate strength, gray, matrix-supported coarse sand- to gravel-sized breccia fragments, moderately to highly fractured, unweathered. - Increasing pyrite and calcite infilling at 21.3 feet. - Abundant healed fractures between 24.7 and 25.0 feet.
31.4	Andesite: Moderate strength, light gray, 25 percent medium to coarse sand-sized inclusions/crystals, moderately fractured, unweathered, scattered calcite veins.
36.3	Andesite Pyroclastite: Low strength, light gray.
37.3	Andesite: Moderate strength, light gray and green-gray, moderately fractured, unweathered, scattered slickensides, scattered pyrite and calcite infilling, scattered xenoliths.

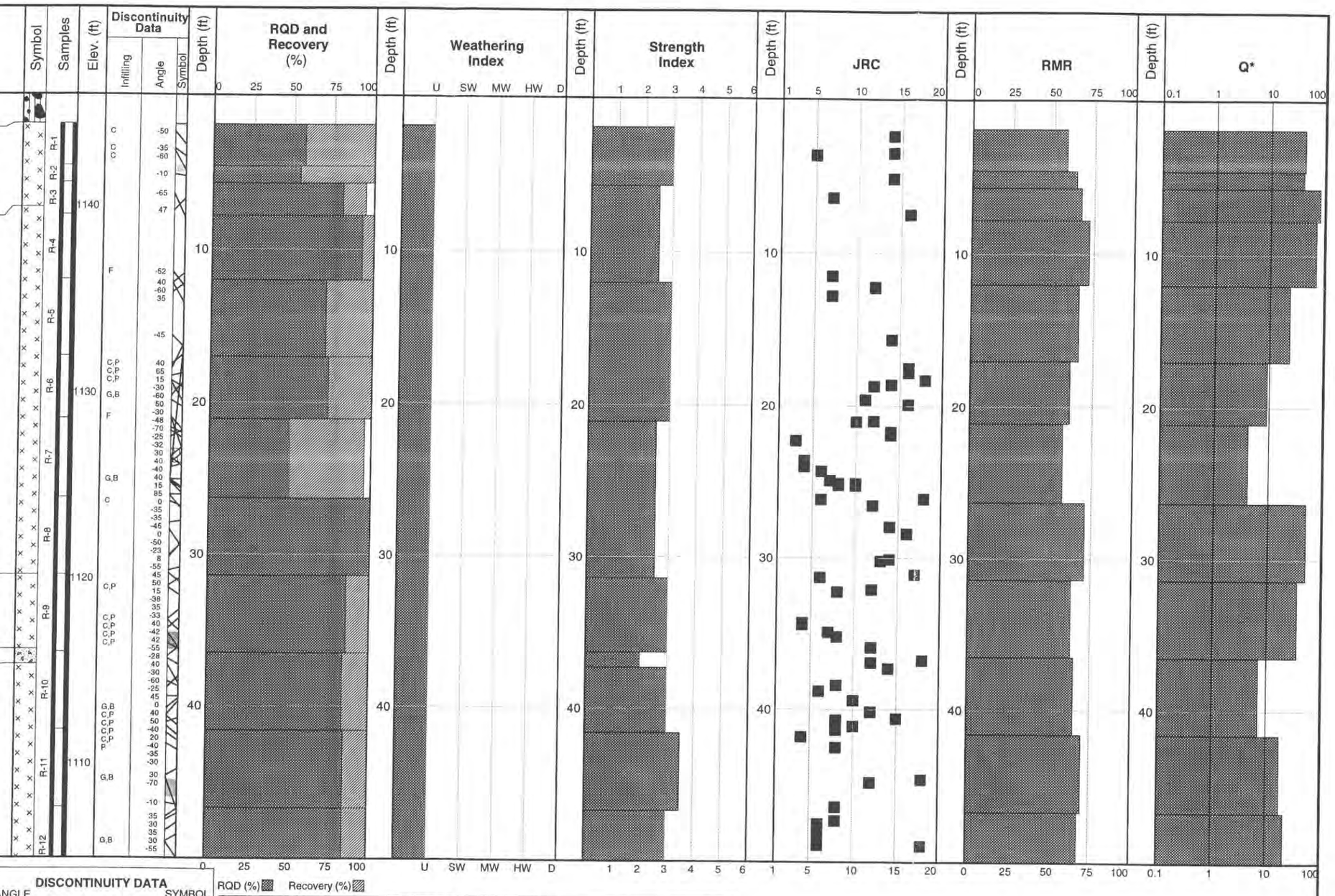

BOREHOLE DATA

Plunge = 55° Azimuth = 31 ° Total Depth = 125.4 ft.
Ground Surface Elevation = 1145.9 ft. (+/-) Depth in Rock = 123.5 ft.

STRENGTH INDEX

See Figure A-1

TERM	INDEX
Very Low	0-1.5
Low	1.5-2.5
Moderate	2.5-3.5
Medium High	3.5-4.5
High	4.5-6
Very High	>=6

DISCONTINUITY SPACING

TERM	SPACING*
Unfractured	>6 ft.
Slightly Fractured	2 to 6 ft.
Moderately Fractured	8 to 24 in.
Highly Fractured	2 to 8 in.
Intensely Fractured	< 2 in.

*apparent spacing along core axis

DISCONTINUITY DATA

ANGLE: Degrees relative to plane horizontal to core axis, (-) below plane

SYMBOL: Rubble Zone, Gouge Zone, Core Loss

INFILLING

BO	Brown to Yellow-Brown Coloration
C	Calcite
CH	Chlorite
P	Pyrite
G	Gouge (Silt and/or Clay)
B	Breccia
GROUT	Grout
R-(Deg.)	Rake of slickensides, where measured
BLANK	Not measured or indeterminant
F	Faint slickensides

DEGREE OF WEATHERING

TERM	DESCRIPTION
Unweathered (U)	No evidence of any chemical or mechanical alteration.
Slightly Weathered (SW)	Slight discoloration on surface, slight alteration along discontinuities, less than 10 percent of the rock volume altered.
Moderately Weathered (MW)	Discoloring evident, surface pitted and altered with alteration penetrating well below rock surfaces, weathering "halos" evident, 10 to 50 percent of the rock altered.
Highly Weathered (HW)	Entire mass discolored, alteration pervading nearly all of the rock with some pockets of slightly weathered rock noticeable, some minerals leached away.
Decomposed (D)	Rock reduced to a soil with relicit rock texture, generally molded and crumbled by hand.

ABBREVIATIONS

RQD = Rock Quality Designation
JRC = Joint Roughness Coefficient
RMR = Rock Mass Rating
Q* = Modified Tunneling Quality Index
UCS = Unconfined Compressive Strength
N = Northing, E = Easting, ft = feet
deg = degrees, in. = inch
psi = pounds per square inch
R-1 = Run Number

NOTES

1. The contacts represent the approximate boundaries between lithology types, and the transition may be gradual.
2. The discussion in the text of this report is necessary for a proper understanding of the nature of the subsurface materials.
3. The locations of the discontinuties shown on the boring logs are approximate. For clarity, not all of the discontinuties are shown. Refer to the rock core photographs in Appendix B for additional information.

Howard Hanson Dam
Fish Passage Facility
Eagle Gorge, Washington

LOG OF BORING 01-DD-222

January 2004 21-1-09317-003

SHANNON & WILSON, INC.
Geotechnical and Environmental Consultants

FIG. A-3
Sheet 1 of 3

ROCK_LOG 21-09317.GPJ 21-09317.GPJ 2/4/04

LITHOLOGY DESCRIPTION

Approx. Coordinates: N: 102,470 E: 1,763,433

Andesite (cont.)

- Calcite stringers between 55.0 and 56.0 feet.
- Increasing mafic mineral inclusions below 56.5 feet.
- Abundant healed fractures below 84.0 feet.
- Gradational contact from 85.8 to 88.0 feet.

85.8 Basaltic Andesite: Moderate strength, gray to dark gray, aphanitic, highly fractured, unweathered, scattered slickensides, abundant calcite, pyrite, and chlorite infilling, abundant highly brecciated/fractured zones.

Samples: R-13, R-14, R-15, R-16, R-17, R-18, R-19, R-20, R-21, R-22

Elev. (ft): 1100, 1090, 1080, 1070

Discontinuity Data

Infilling	Angle	Symbol
	0	
	60	
	60	
B,G	65	
	30	
G	45	
	55	
C(1/8")P	-45	
G,F	60	
	75	
	10	
	10	
	-50	
	10	
	60	
	60	
	60	
	65	
G	60	
	0	
BO	65	
	-40	
	50	
	30	
	45	
	45	
	5	
BO	50	
G	20	
G	60	
G	50	
G	40	
BO	-50	
	50	
	-50	
BO,B	-50	
	70	
	50	
	30	
	0	
	70	
	40	
	60	
	60	
	60	
	20	
	60	
G	60	
	0	
	-60	
G	-5	
	-70	

RQD and Recovery (%): 0 25 50 75 100

Weathering Index: U SW MW HW D

Strength Index: 1 2 3 4 5 6

JRC: 1 5 10 15 20

RMR: 0 25 50 75 100

Q*: 0.1 1 10 100

Depth (ft): 60, 70, 80, 90

RQD (%) Recovery (%)

BOREHOLE DATA

Plunge = 55° Azimuth = 31 ° Total Depth = 125.4 ft.
Ground Surface Elevation = 1145.9 ft. (+/-) Depth in Rock = 123.5 ft.

STRENGTH INDEX

See Figure A-1

TERM	INDEX
Very Low	0-1.5
Low	1.5-2.5
Moderate	2.5-3.5
Medium High	3.5-4.5
High	4.5-6
Very High	>=6

DISCONTINUITY SPACING

TERM	SPACING*
Unfractured	>6 ft.
Slightly Fractured	2 to 6 ft.
Moderately Fractured	8 to 24 in.
Highly Fractured	2 to 8 in.
Intensely Fractured	< 2 in.

*apparent spacing along core axis

DISCONTINUITY DATA

ANGLE: Degrees relative to plane horizontal to core axis, (-) below plane

SYMBOL: Rubble Zone, Gouge Zone, Core Loss

INFILLING

BO	Brown to Yellow-Brown Coloration
C	Calcite
CH	Chlorite
P	Pyrite
G	Gouge (Silt and/or Clay)
B	Breccia
GROUT	Grout
R-(Deg.)	Rake of slickensides, where measured
BLANK	Not measured or indeterminant
F	Faint slickensides

DEGREE OF WEATHERING

TERM	DESCRIPTION
Unweathered (U)	No evidence of any chemical or mechanical alteration.
Slightly Weathered (SW)	Slight discoloration on surface, slight alteration along discontinuities, less than 10 percent of the rock volume altered.
Moderately Weathered (MW)	Discoloring evident, surface pitted and altered with alteration penetrating well below rock surfaces, weathering "halos" evident, 10 to 50 percent of the rock altered.
Highly Weathered (HW)	Entire mass discolored, alteration pervading nearly all of the rock with some pockets of slightly weathered rock noticeable, some minerals leached away.
Decomposed (D)	Rock reduced to a soil with relicit rock texture, generally molded and crumbled by hand.

ABBREVIATIONS

RQD = Rock Quality Designation
JRC = Joint Roughness Coefficient
RMR = Rock Mass Rating
Q* = Modified Tunneling Quality Index
UCS = Unconfined Compressive Strength
N = Northing, E = Easting, ft = feet
deg = degrees, in. = inch
psi = pounds per square inch
R-1 = Run Number

NOTES

1. The contacts represent the approximate boundaries between lithology types, and the transition may be gradual.
2. The discussion in the text of this report is necessary for a proper understanding of the nature of the subsurface materials.
3. The locations of the discontinuties shown on the boring logs are approximate. For clarity, not all of the discontinuities are shown. Refer to the rock core photographs in Appendix B for additional information.

Howard Hanson Dam
Fish Passage Facility
Eagle Gorge, Washington

LOG OF BORING 01-DD-222

January 2004 21-1-09317-003

SHANNON & WILSON, INC.
Geotechnical and Environmental Consultants

FIG. A-3
Sheet 2 of 3

ROCK_LOG 21-09317.GPJ 21-09317.GPJ 2/4/04

LITHOLOGY DESCRIPTION

Approx. Coordinates: N: 102,470 E: 1,763,433

Basaltic Andesite (cont.)

125.4 BOTTOM OF BORING AT 125.4 FEET
COMPLETED 7/20/2001

Samples: R-23, R-24, R-25, R-26, R-27, R-28, R-29, R-30

Elev. (ft): 1060, 1050, 1040, 1030

Discontinuity Data: Infilling (C, C, G, P, CH, C, C, C, C); Angle; Symbol

Depth (ft): 110, 120, 130, 140

RQD and Recovery (%): 0 25 50 75 100

Weathering Index: U SW MW HW D

Strength Index: 1 2 3 4 5 6

JRC: 1 5 10 15 20

RMR: 0 25 50 75 100

Q*: 0.1 1 10 100

RQD (%) Recovery (%)

BOREHOLE DATA

Plunge = 55° Azimuth = 31 ° Total Depth = 125.4 ft.
Ground Surface Elevation = 1145.9 ft. (+/-) Depth in Rock = 123.5 ft.

STRENGTH INDEX

See Figure A-1

TERM	INDEX
Very Low	0-1.5
Low	1.5-2.5
Moderate	2.5-3.5
Medium High	3.5-4.5
High	4.5-6
Very High	>=6

DISCONTINUITY SPACING

TERM	SPACING*
Unfractured	>6 ft.
Slightly Fractured	2 to 6 ft.
Moderately Fractured	8 to 24 in.
Highly Fractured	2 to 8 in.
Intensely Fractured	< 2 in.

*apparent spacing along core axis

DISCONTINUITY DATA

ANGLE: Degrees relative to plane horizontal to core axis, (-) below plane

SYMBOL: Rubble Zone, Gouge Zone, Core Loss

INFILLING

BO	Brown to Yellow-Brown Coloration
C	Calcite
CH	Chlorite
P	Pyrite
G	Gouge (Silt and/or Clay)
B	Breccia
GROUT	Grout
R-(Deg.)	Rake of slickensides, where measured
BLANK	Not measured or indeterminant
F	Faint slickensides

DEGREE OF WEATHERING

TERM	DESCRIPTION
Unweathered (U)	No evidence of any chemical or mechanical alteration.
Slightly Weathered (SW)	Slight discoloration on surface, slight alteration along discontinuities, less than 10 percent of the rock volume altered.
Moderately Weathered (MW)	Discoloring evident, surface pitted and altered with alteration penetrating well below rock surfaces, weathering "halos" evident, 10 to 50 percent of the rock altered.
Highly Weathered (HW)	Entire mass discolored, alteration pervading nearly all of the rock with some pockets of slightly weathered rock noticeable, some minerals leached away.
Decomposed (D)	Rock reduced to a soil with relicit rock texture, generally molded and crumbled by hand.

ABBREVIATIONS

RQD = Rock Quality Designation
JRC = Joint Roughness Coefficient
RMR = Rock Mass Rating
Q* = Modified Tunneling Quality Index
UCS = Unconfined Compressive Strength
N = Northing, E = Easting, ft = feet
deg = degrees, in. = inch
psi = pounds per square inch
R-1 = Run Number

NOTES

1. The contacts represent the approximate boundaries between lithology types, and the transition may be gradual.
2. The discussion in the text of this report is necessary for a proper understanding of the nature of the subsurface materials.
3. The locations of the discontinuties shown on the boring logs are approximate. For clarity, not all of the discontinuities are shown. Refer to the rock core photographs in Appendix B for additional information.

Howard Hanson Dam
Fish Passage Facility
Eagle Gorge, Washington

LOG OF BORING 01-DD-222

January 2004 21-1-09317-003

SHANNON & WILSON, INC.
Geotechnical and Environmental Consultants

FIG. A-3
Sheet 3 of 3

ROCK_LOG 21-09317.GPJ 21-09317.GPJ 2/4/04

LITHOLOGY DESCRIPTION

Approx. Coordinates: N: 102,468 E: 1,763,432

Brown, slightly silty to silty, sandy GRAVEL; moist; (Road Fill) GM/GP-GM.

2.1

Basaltic Andesite: Moderate strength, dark gray to red-brown, aphanitic, moderately fractured, unweathered, scattered calcite stringers.

3.4

Andesite: Moderate strength, gray, aphanitic ground mass with red-brown and dark gray breccia fragments, moderately fractured, unweathered, scattered pyrite and calcite vein and fracture fillings.

- Grades to red-brown with smaller inclusions at 7.1 feet.
- Friable zone from 10.5 to 10.6 feet.
- Prominent calcite stringer at 13.2 feet.
- Scattered green-gray gravel-sized inclusions at 14.0 feet.

- Coarse gravel-sized inclusions at 29.0 feet.

- Scattered healed vertical fractures at 36.5 feet.

- Flow texture at 44.6 feet.

Symbol / Samples: R-1, R-2, R-3, R-4, R-5, R-6, R-7, R-8, R-9, R-10

Elev. (ft): 1140, 1130, 1120, 1110, 1100

Discontinuity Data

Infilling	Angle	Symbol
G	-70	
	78	
	-70	
C	10	
	-25	
	-15	
	50	
	18	
	10	
	10	
P,C	40	
P,C	30	
C	-30	
	-70	
	-20	
	15	
	-10	
	15	
	10	
	-30	
	-20	
BO	-80	
	38	
	25	
	-20	
	25	
	-15	
	10	
G	25	
C(3/8")	60	
BO	5	
BC	20	
	55	
G,B,BO	-12	
	-25	
	16	
	40	
	-50	
	-65	
	-25	
	-68	
	18	
	35	
	-18	
C	-40	
	-5	
	-60	
B,F	20	
F		

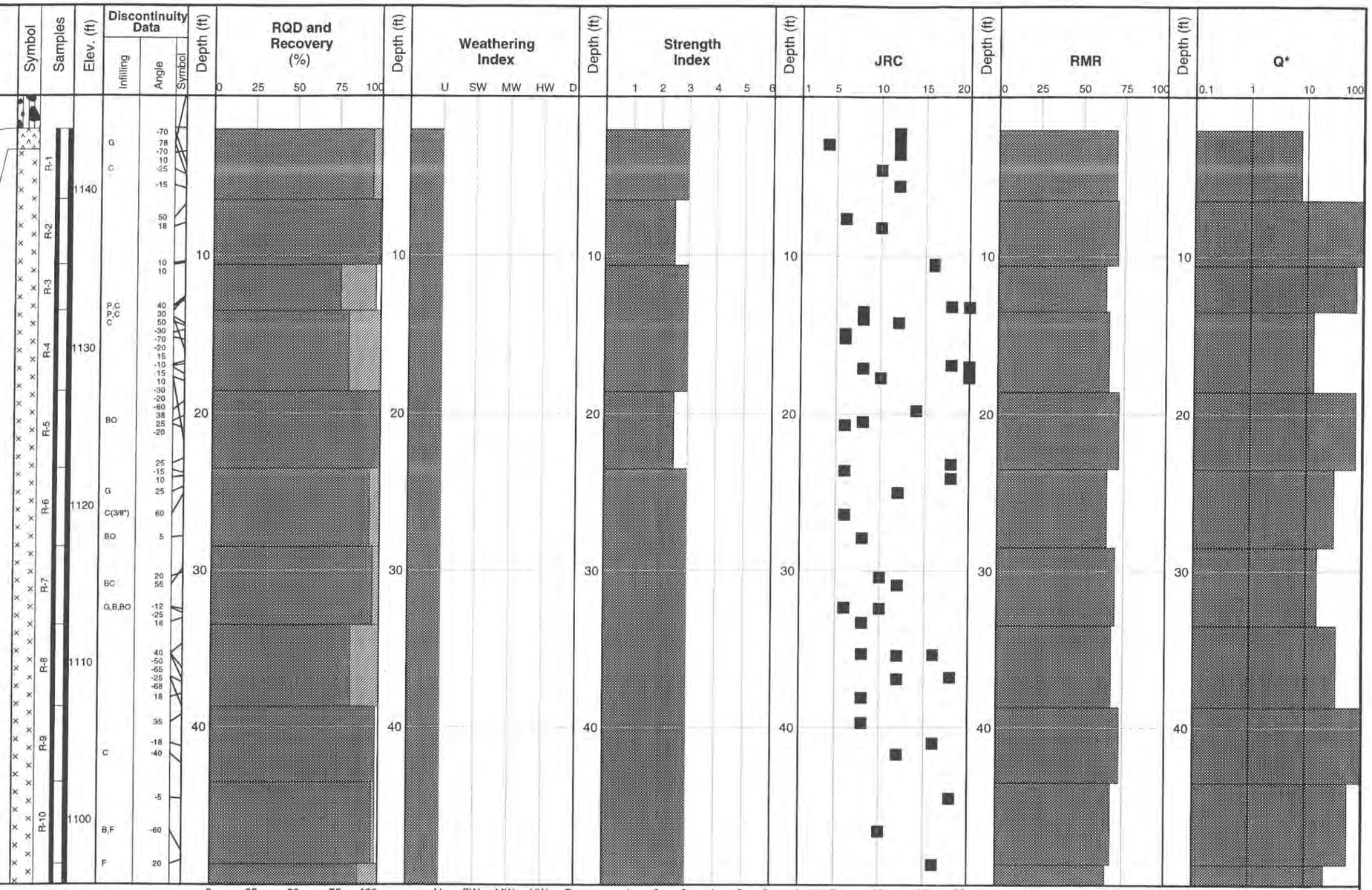

BOREHOLE DATA

Plunge = 90° Azimuth = N/A °

Total Depth = 131.4 ft.

Ground Surface Elevation = 1145.9 ft. (+/-)

Depth in Rock = 129.3 ft.

STRENGTH INDEX

See Figure A-1

TERM	INDEX
Very Low	0-1.5
Low	1.5-2.5
Moderate	2.5-3.5
Medium High	3.5-4.5
High	4.5-6
Very High	>=6

DISCONTINUITY SPACING

TERM	SPACING*
Unfractured	>6 ft.
Slightly Fractured	2 to 6 ft.
Moderately Fractured	8 to 24 in.
Highly Fractured	2 to 8 in.
Intensely Fractured	< 2 in.

*apparent spacing along core axis

DISCONTINUITY DATA

ANGLE: Degrees relative to plane horizontal to core axis, (-) below plane

SYMBOL: Rubble Zone, Gouge Zone, Core Loss

INFILLING

BO	Brown to Yellow-Brown Coloration
C	Calcite
CH	Chlorite
P	Pyrite
G	Gouge (Silt and/or Clay)
B	Breccia
GROUT	Grout
R-(Deg.)	Rake of slickensides, where measured
BLANK	Not measured or indeterminant
F	Faint slickensides

DEGREE OF WEATHERING

TERM	DESCRIPTION
Unweathered (U)	No evidence of any chemical or mechanical alteration.
Slightly Weathered (SW)	Slight discoloration on surface, slight alteration along discontinuities, less than 10 percent of the rock volume altered.
Moderately Weathered (MW)	Discoloring evident, surface pitted and altered with alteration penetrating well below rock surfaces, weathering "halos" evident, 10 to 50 percent of the rock altered.
Highly Weathered (HW)	Entire mass discolored, alteration pervading nearly all of the rock with some pockets of slightly weathered rock noticeable, some minerals leached away.
Decomposed (D)	Rock reduced to a soil with relicit rock texture, generally molded and crumbled by hand.

ABBREVIATIONS

RQD = Rock Quality Designation
JRC = Joint Roughness Coefficient
RMR = Rock Mass Rating
Q* = Modified Tunneling Quality Index
UCS = Unconfined Compressive Strength
N = Northing, E = Easting, ft = feet
deg = degrees, in. = inch
psi = pounds per square inch
R-1 = Run Number

NOTES

1. The contacts represent the approximate boundaries between lithology types, and the transition may be gradual.
2. The discussion in the text of this report is necessary for a proper understanding of the nature of the subsurface materials.
3. The locations of the discontinuties shown on the boring logs are approximate. For clarity, not all of the discontinuties are shown. Refer to the rock core photographs in Appendix B for additional information.

Howard Hanson Dam
Fish Passage Facility
Eagle Gorge, Washington

LOG OF BORING 01-DD-223

February 2004 21-1-09317-003

SHANNON & WILSON, INC.
Geotechnical and Environmental Consultants

FIG. A-4
Sheet 1 of 3

ROCK_LOG 21-09317.GPJ 21-09317.GPJ 2/4/04

Depth (ft)	LITHOLOGY DESCRIPTION Approx. Coordinates: N: 102,468 E: 1,763,432
	Andesite (cont.)
	- Prominent 50-degree calcite stringer at 69.1 feet.
	- Clast-supported brecciated texture below 73.2 feet.
	- Evidence of at least two separate episodes of deformation in discontinuity at 80.2 feet.
	- Prominent calcite stringer at 84.8 feet. - Flow texture at 85.8 feet.
91.7	Andesite: Moderate strength, green-gray, moderately fractured, unweathered, scattered calcite infilling, faint flow texture.
95.0	Andesite: Moderate strength, gray, coarse gravel-sized inclusions of various igneous textures, slightly fractured, unweathered, scattered calcite infilling.

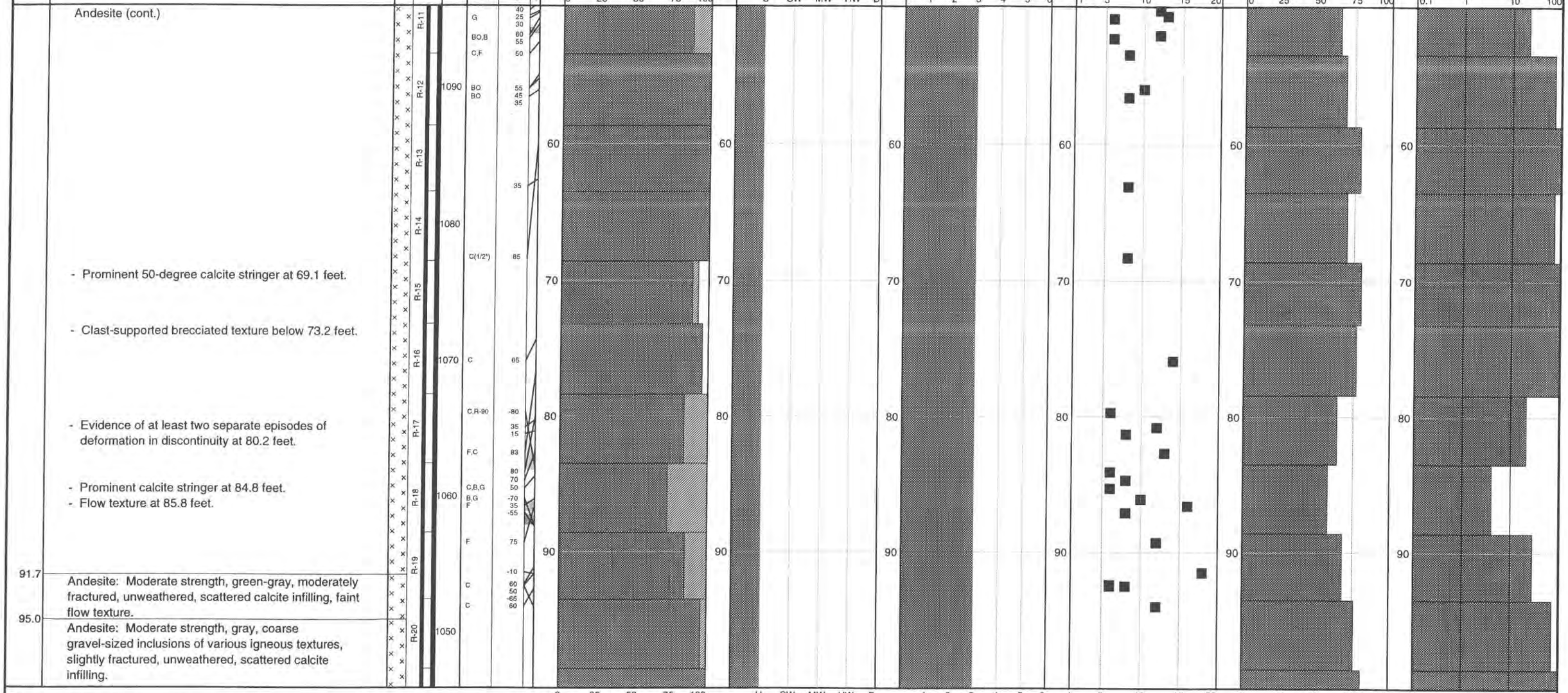

BOREHOLE DATA

Plunge = 90° Azimuth = N/A ° Total Depth = 131.4 ft.
Ground Surface Elevation = 1145.9 ft. (+/-) Depth in Rock = 129.3 ft.

STRENGTH INDEX

See Figure A-1

TERM	INDEX
Very Low	0-1.5
Low	1.5-2.5
Moderate	2.5-3.5
Medium High	3.5-4.5
High	4.5-6
Very High	>=6

DISCONTINUITY SPACING

TERM	SPACING*
Unfractured	>6 ft.
Slightly Fractured	2 to 6 ft.
Moderately Fractured	8 to 24 in.
Highly Fractured	2 to 8 in.
Intensely Fractured	< 2 in.

*apparent spacing along core axis

DISCONTINUITY DATA

ANGLE: Degrees relative to plane horizontal to core axis, (-) below plane

SYMBOL: Rubble Zone, Gouge Zone, Core Loss

INFILLING

BO	Brown to Yellow-Brown Coloration
C	Calcite
CH	Chlorite
P	Pyrite
G	Gouge (Silt and/or Clay)
B	Breccia
GROUT	Grout
R-(Deg.)	Rake of slickensides, where measured
BLANK	Not measured or indeterminant
F	Faint slickensides

DEGREE OF WEATHERING

TERM	DESCRIPTION
Unweathered (U)	No evidence of any chemical or mechanical alteration.
Slightly Weathered (SW)	Slight discoloration on surface, slight alteration along discontinuities, less than 10 percent of the rock volume altered.
Moderately Weathered (MW)	Discoloring evident, surface pitted and altered with alteration penetrating well below rock surfaces, weathering "halos" evident, 10 to 50 percent of the rock altered.
Highly Weathered (HW)	Entire mass discolored, alteration pervading nearly all of the rock with some pockets of slightly weathered rock noticeable, some minerals leached away.
Decomposed (D)	Rock reduced to a soil with relicit rock texture, generally molded and crumbled by hand.

ABBREVIATIONS

RQD = Rock Quality Designation
JRC = Joint Roughness Coefficient
RMR = Rock Mass Rating
Q* = Modified Tunneling Quality Index
UCS = Unconfined Compressive Strength
N = Northing, E = Easting, ft = feet
deg = degrees, in. = inch
psi = pounds per square inch
R-1 = Run Number

NOTES

1. The contacts represent the approximate boundaries between lithology types, and the transition may be gradual.
2. The discussion in the text of this report is necessary for a proper understanding of the nature of the subsurface materials.
3. The locations of the discontinuties shown on the boring logs are approximate. For clarity, not all of the discontinuities are shown. Refer to the rock core photographs in Appendix B for additional information.

Howard Hanson Dam
Fish Passage Facility
Eagle Gorge, Washington

LOG OF BORING 01-DD-223

February 2004 21-1-09317-003

SHANNON & WILSON, INC.
Geotechnical and Environmental Consultants

FIG. A-4
Sheet 2 of 3

ROCK_LOG 21-09317.GPJ 21-09317.GPJ 2/4/04

LITHOLOGY DESCRIPTION

Approx. Coordinates: N: 102,468 E: 1,763,432

Andesite (cont.)

111.8 - Gradational contact at 111.8 feet.

Basaltic Andesite: Moderate strength, dark gray, approximately 20 percent mafic phenochrysts, moderately fractured, unweathered, abundant calcite stringers and pockets, scattered slickensides.

125.0

Andesite: Moderate strength, light gray, highly fractured, unweathered, abundant pyrite and calcite infilling, scattered slickensides.

129.9

Andesite: Moderate strength, gray, highly fractured, unweathered, abundant pyrite and calcite infilling.

131.4

BOTTOM OF BORING AT 131.4 FEET
COMPLETED 7/24/2001

Symbol

Samples: R-21, R-22, R-23, R-24, R-25, R-26, R-27

Elev. (ft): 1040, 1030, 1020, 1010, 1000

Discontinuity Data

Infilling	Angle	Symbol
F	60	
B,G,C,R	75 55	
C	-50	
C	50	
BO	-30	
C	-30	
BO	-30	
BO	15	
	-30	
	28	
F	-10	
	58	
C	30	
	45	
BO	-10	
F	-40	
B,G	-45	
B,G	60	
	50	
C	-40	
C	-50	
P,C	-55	
C,F	-50	
C,P	-40	
C	-50	
	40	
	55	
	-65	
	63	
	60	

Depth (ft): 110, 120, 130, 140

RQD and Recovery (%): 0 25 50 75 100

Weathering Index: U SW MW HW D

Strength Index: 1 2 3 4 5 6

JRC: 1 5 10 15 20

RMR: 0 25 50 75 100

Q*: 0.1 1 10 100

RQD (%) Recovery (%)

BOREHOLE DATA

Plunge = 90° Azimuth = N/A °
Total Depth = 131.4 ft.
Ground Surface Elevation = 1145.9 ft. (+/-) Depth in Rock = 129.3 ft.

STRENGTH INDEX

See Figure A-1

TERM	INDEX
Very Low	0-1.5
Low	1.5-2.5
Moderate	2.5-3.5
Medium High	3.5-4.5
High	4.5-6
Very High	>=6

DISCONTINUITY SPACING

TERM	SPACING*
Unfractured	>6 ft.
Slightly Fractured	2 to 6 ft.
Moderately Fractured	8 to 24 in.
Highly Fractured	2 to 8 in.
Intensely Fractured	< 2 in.

*apparent spacing along core axis

DISCONTINUITY DATA

ANGLE: Degrees relative to plane horizontal to core axis, (-) below plane

SYMBOL: Rubble Zone, Gouge Zone, Core Loss

INFILLING

BO	Brown to Yellow-Brown Coloration
C	Calcite
CH	Chlorite
P	Pyrite
G	Gouge (Silt and/or Clay)
B	Breccia
GROUT	Grout
R-(Deg.)	Rake of slickensides, where measured
BLANK	Not measured or indeterminant
F	Faint slickensides

DEGREE OF WEATHERING

TERM	DESCRIPTION
Unweathered (U)	No evidence of any chemical or mechanical alteration.
Slightly Weathered (SW)	Slight discoloration on surface, slight alteration along discontinuities, less than 10 percent of the rock volume altered.
Moderately Weathered (MW)	Discoloring evident, surface pitted and altered with alteration penetrating well below rock surfaces, weathering "halos" evident, 10 to 50 percent of the rock altered.
Highly Weathered (HW)	Entire mass discolored, alteration pervading nearly all of the rock with some pockets of slightly weathered rock noticeable, some minerals leached away.
Decomposed (D)	Rock reduced to a soil with relicit rock texture, generally molded and crumbled by hand.

ABBREVIATIONS

RQD = Rock Quality Designation
JRC = Joint Roughness Coefficient
RMR = Rock Mass Rating
Q* = Modified Tunneling Quality Index
UCS = Unconfined Compressive Strength
N = Northing, E = Easting, ft = feet
deg = degrees, in. = inch
psi = pounds per square inch
R-1 = Run Number

NOTES

1. The contacts represent the approximate boundaries between lithology types, and the transition may be gradual.
2. The discussion in the text of this report is necessary for a proper understanding of the nature of the subsurface materials.
3. The locations of the discontinuties shown on the boring logs are approximate. For clarity, not all of the discontinuties are shown. Refer to the rock core photographs in Appendix B for additional information.

Howard Hanson Dam
Fish Passage Facility
Eagle Gorge, Washington

LOG OF BORING 01-DD-223

February 2004 21-1-09317-003

SHANNON & WILSON, INC.
Geotechnical and Environmental Consultants

FIG. A-4
Sheet 3 of 3

HOCK_LOG 21-09317.GPJ 21-09317.GPJ 2/4/04

LITHOLOGY DESCRIPTION

Approx. Coordinates: N: 102,483 E: 1,763,411

1.5 — Brown, silty, sandy GRAVEL; moist; (Andesite Pyroclastic Talus) GM/GP-GM.

Andesite Pyroclastite: Moderate strength, light gray and gray, brecciated clast-supported texture with light gray pumice and pyroclastics in a welded matrix, moderately to highly fractured, unweathered, scattered calcite and pyrite infillings, scattered slickensides.

- 70-degree calcite and pyrite stringer at 7.5 feet.
- 40-degree calcite stringer at 8.3 feet.
- Faint, gradational contact from 13.0 to 17.0 feet.

17.0 — Andesite: Moderate strength, gray with red-brown and light gray sand- to gravel-sized breccia fragments, moderately fractured, unweathered, scattered calcite infilling.

22.7 — - Gradational contact at 22.7 feet.

Andesite: Moderate strength, light gray, 10 percent light gray inclusions/phenochrysts, moderately fractured, unweathered, scattered slickensides, scattered calcite infilling.

- Scattered pyroclastic zones above 32 feet

- Phenochrysts become larger at 43.7 feet.

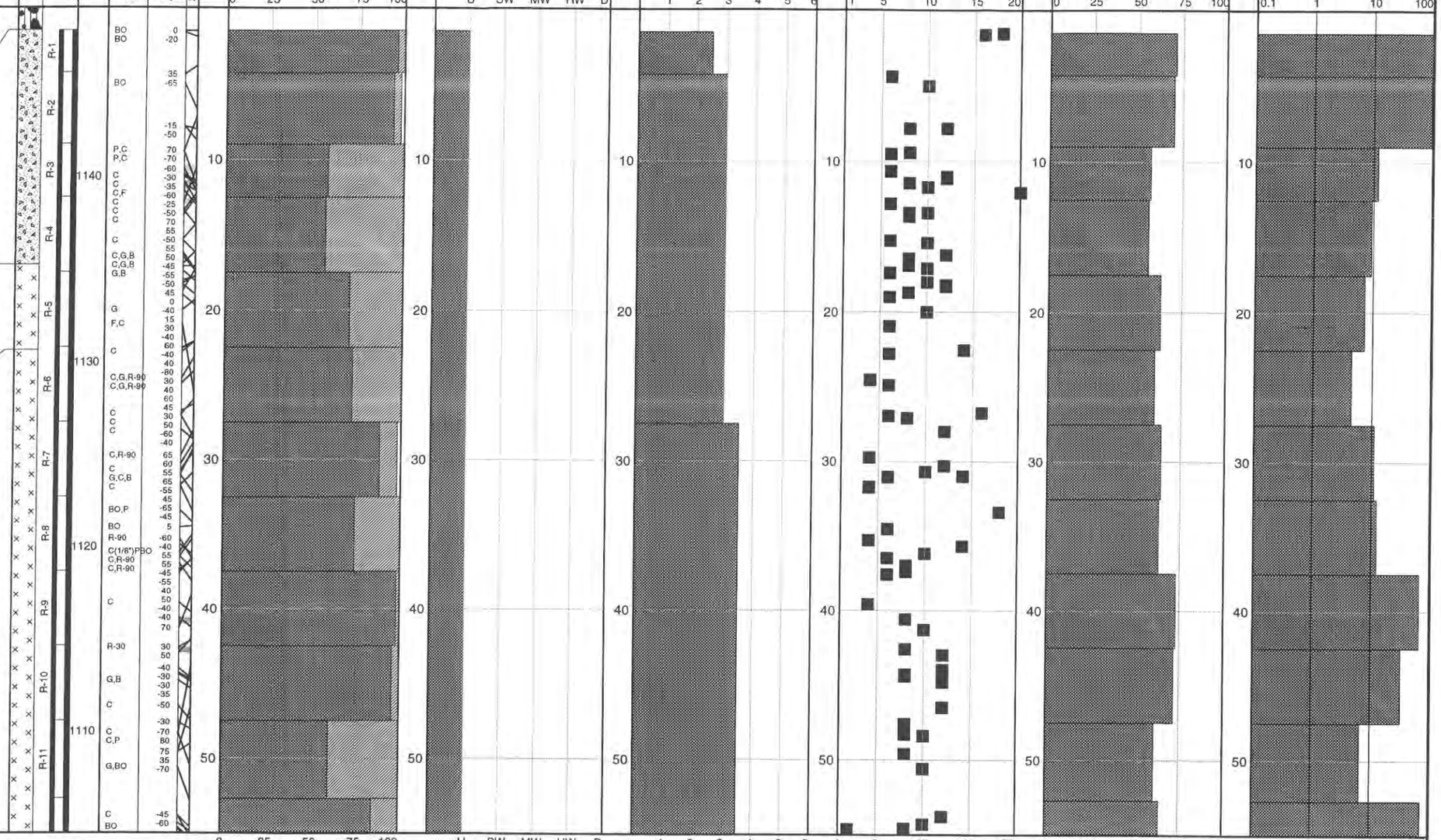

BOREHOLE DATA

Plunge = 54° Azimuth = 1 ° Total Depth = 150 ft.
Ground Surface Elevation = 1149.0 ft. (+/-) Depth in Rock = 148.7 ft.

STRENGTH INDEX

See Figure A-1

TERM	INDEX
Very Low	0-1.5
Low	1.5-2.5
Moderate	2.5-3.5
Medium High	3.5-4.5
High	4.5-6
Very High	>=6

DISCONTINUITY SPACING

TERM	SPACING*
Unfractured	>6 ft.
Slightly Fractured	2 to 6 ft.
Moderately Fractured	8 to 24 in.
Highly Fractured	2 to 8 in.
Intensely Fractured	< 2 in.

*apparent spacing along core axis

DISCONTINUITY DATA

ANGLE: Degrees relative to plane horizontal to core axis, (-) below plane

SYMBOL: Rubble Zone; Gouge Zone; Core Loss

INFILLING

BO	Brown to Yellow-Brown Coloration
C	Calcite
CH	Chlorite
P	Pyrite
G	Gouge (Silt and/or Clay)
B	Breccia
GROUT	Grout
R-(Deg.)	Rake of slickensides, where measured
BLANK	Not measured or indeterminant
F	Faint slickensides

DEGREE OF WEATHERING

TERM	DESCRIPTION
Unweathered (U)	No evidence of any chemical or mechanical alteration.
Slightly Weathered (SW)	Slight discoloration on surface, slight alteration along discontinuities, less than 10 percent of the rock volume altered.
Moderately Weathered (MW)	Discoloring evident, surface pitted and altered with alteration penetrating well below rock surfaces, weathering "halos" evident, 10 to 50 percent of the rock altered.
Highly Weathered (HW)	Entire mass discolored, alteration pervading nearly all of the rock with some pockets of slightly weathered rock noticeable, some minerals leached away.
Decomposed (D)	Rock reduced to a soil with relicit rock texture, generally molded and crumbled by hand.

ABBREVIATIONS

RQD = Rock Quality Designation
JRC = Joint Roughness Coefficient
RMR = Rock Mass Rating
Q* = Modified Tunneling Quality Index
UCS = Unconfined Compressive Strength
N = Northing, E = Easting, ft = feet
deg = degrees, in. = inch
psi = pounds per square inch
R-1 = Run Number

NOTES

1. The contacts represent the approximate boundaries between lithology types, and the transition may be gradual.
2. The discussion in the text of this report is necessary for a proper understanding of the nature of the subsurface materials.
3. The locations of the discontinuties shown on the boring logs are approximate. For clarity, not all of the discontinuties are shown. Refer to the rock core photographs in Appendix B for additional information.

Howard Hanson Dam
Fish Passage Facility
Eagle Gorge, Washington

LOG OF BORING 01-DD-224

February 2004 21-1-09317-003

SHANNON & WILSON, INC.
Geotechnical and Environmental Consultants

FIG. A-5
Sheet 1 of 3

ROCK_LOG 21-09317.GPJ 21-09317.GPJ 2/4/04

LITHOLOGY DESCRIPTION

Approx. Coordinates: N: 102,483 E: 1,763,411

Andesite (cont.)
- Abundant interstitial pyrite below 56.0 feet.

- Lost 70 percent of drill fluid return at 67.4 feet; 10 to 15 percent mafic phenochrysts.
- Higher strength from 67.4 to 75.9 feet.

- Fine gravel-sized inclusions with light gray rhinds at 91.6 and 92.1 feet.

93.5 Andesite: Moderate strength, gray, aphanitic, moderately fractured, unweathered.
- Brecciated at 94.0 feet

95.6 Andesite: Moderate strength, light gray, moderately fractured, unweathered, scattered slickensides, scattered aphanitic zones with flow texture.

102.3 Andesite: Moderate strength, dark gray, moderately fractured, unweathered, aphanitic, abundant calcite veins.

106.4 Andesite Pyroclastite: Moderate strength, light gray.

108.1

Symbol: R-2, R-13, R-14, R-15, R-16, R-17, R-18, R-19, R-20, R-21, R-22

Elev. (ft): 1100, 1090, 1080, 1070

Discontinuity Data: Infilling; Angle; Symbol

RQD and Recovery (%): 0 25 50 75 100

Weathering Index: U SW MW HW D

Strength Index: 1 2 3 4 5 6

JRC: 1 5 10 15 20

RMR: 0 25 50 75 100

Q*: 0.1 1 10 100

Depth (ft): 60 70 80 90 100

RQD (%) Recovery (%)

BOREHOLE DATA

Plunge = 54° Azimuth = 1 ° Total Depth = 150 ft.
Ground Surface Elevation = 1149.0 ft. (+/-) Depth in Rock = 148.7 ft.

STRENGTH INDEX

See Figure A-1

TERM	INDEX
Very Low	0-1.5
Low	1.5-2.5
Moderate	2.5-3.5
Medium High	3.5-4.5
High	4.5-6
Very High	>=6

DISCONTINUITY SPACING

TERM	SPACING*
Unfractured	>6 ft.
Slightly Fractured	2 to 6 ft.
Moderately Fractured	8 to 24 in.
Highly Fractured	2 to 8 in.
Intensely Fractured	< 2 in.

*apparent spacing along core axis

DISCONTINUITY DATA

ANGLE: Degrees relative to plane horizontal to core axis, (-) below plane

SYMBOL: Rubble Zone; Gouge Zone; Core Loss

INFILLING

BO	Brown to Yellow-Brown Coloration
C	Calcite
CH	Chlorite
P	Pyrite
G	Gouge (Silt and/or Clay)
B	Breccia
GROUT	Grout
R-(Deg.)	Rake of slickensides, where measured
BLANK	Not measured or indeterminant
F	Faint slickensides

DEGREE OF WEATHERING

TERM	DESCRIPTION
Unweathered (U)	No evidence of any chemical or mechanical alteration.
Slightly Weathered (SW)	Slight discoloration on surface, slight alteration along discontinuities, less than 10 percent of the rock volume altered.
Moderately Weathered (MW)	Discoloring evident, surface pitted and altered with alteration penetrating well below rock surfaces, weathering "halos" evident, 10 to 50 percent of the rock altered.
Highly Weathered (HW)	Entire mass discolored, alteration pervading nearly all of the rock with some pockets of slightly weathered rock noticeable, some minerals leached away.
Decomposed (D)	Rock reduced to a soil with relicit rock texture, generally molded and crumbled by hand.

ABBREVIATIONS

RQD = Rock Quality Designation
JRC = Joint Roughness Coefficient
RMR = Rock Mass Rating
Q* = Modified Tunneling Quality Index
UCS = Unconfined Compressive Strength
N = Northing, E = Easting, ft = feet
deg = degrees, in. = inch
psi = pounds per square inch
R-1 = Run Number

NOTES

1. The contacts represent the approximate boundaries between lithology types, and the transition may be gradual.
2. The discussion in the text of this report is necessary for a proper understanding of the nature of the subsurface materials.
3. The locations of the discontinuties shown on the boring logs are approximate. For clarity, not all of the discontinuties are shown. Refer to the rock core photographs in Appendix B for additional information.

Howard Hanson Dam
Fish Passage Facility
Eagle Gorge, Washington

LOG OF BORING 01-DD-224

February 2004 21-1-09317-003

SHANNON & WILSON, INC.
Geotechnical and Environmental Consultants

FIG. A-5
Sheet 2 of 3

ROCK_LOG 21-09317.GPJ 21-09317.GPJ 2/4/04

Depth (ft)	LITHOLOGY DESCRIPTION Approx. Coordinates: N: 102,483 E: 1,763,411
112.3	Andesite: Moderate strength, light gray, moderately fractured, unweathered, aphantic, abundant healed fractures, scattered slickensides, scattered pyrite and calcite infillings.
	Basaltic Andesite: Moderate strength, dark gray, highly fractured, unweathered, abundant slickensides, scattered healed brecciated zones, abundant calcite infilling.
	- Arcuate fracture with slickensides from 132.6 to 133.2 feet
138.8	- Diffuse contact at 138.8 feet.
	Andesite: Moderate strength, light gray, 30 percent light gray medium sand-sized phenochrysts and 10 percent mafic phenochrysts, moderately fractured, unweathered, scattered slickensides and calcite infilling.
150.2	BOTTOM OF BORING AT 150.2 FEET COMPLETED 7/26/2001

Symbol; Samples: R-23, R-24, R-25, R-26, R-27, R-28, R-29, R-30, R-31

Elev. (ft): 1050, 1040, 1030, 1020

Discontinuity Data — Infilling: P,C,F; P,C,F; P,C,F; P,C,F; P,C,F; C,P; B,C; C(1/8"); C; C(1/4"); C(1/8"); C; C; C; C; C; G,C; R-90; F,C; C

Discontinuity Data — Angle: 55, -15, 50, +45, -35, 20, 15, -20, 40, -50, 65, 50, 45, 30, -40, 50, 55, -20, 40, 20, 25, -50, -80, 50, 70, 30, 60, -70, -70, 25, -40, -45, 50, -45, 10, -55, 60, -40, -40, -30, 45, 55, 20, -50, -40, -80, 45, 65, -40, 40, -65, -50, -50, -58, 5, -20, -70, 45, 45, -55, -40, 45, -35

Discontinuity Data — Symbol

Depth (ft): 120, 130, 140, 150, 160

RQD and Recovery (%): 0, 25, 50, 75, 100

Weathering Index: U, SW, MW, HW, D

Strength Index: 1, 2, 3, 4, 5, 6

JRC: 1, 5, 10, 15, 20

RMR: 0, 25, 50, 75, 100

Q*: 0.1, 1, 10, 100

RQD (%) ▩ Recovery (%) ▨

BOREHOLE DATA

Plunge = 54° Azimuth = 1 °
Total Depth = 150 ft.
Ground Surface Elevation = 1149.0 ft. (+/-) Depth in Rock = 148.7 ft.

STRENGTH INDEX

See Figure A-1

TERM	INDEX
Very Low	0-1.5
Low	1.5-2.5
Moderate	2.5-3.5
Medium High	3.5-4.5
High	4.5-6
Very High	>=6

DISCONTINUITY SPACING

TERM	SPACING*
Unfractured	>6 ft.
Slightly Fractured	2 to 6 ft.
Moderately Fractured	8 to 24 in.
Highly Fractured	2 to 8 in.
Intensely Fractured	< 2 in.

*apparent spacing along core axis

DISCONTINUITY DATA

ANGLE: Degrees relative to plane horizontal to core axis, (-) below plane

SYMBOL: Rubble Zone, Gouge Zone, Core Loss

INFILLING

BO	Brown to Yellow-Brown Coloration
C	Calcite
CH	Chlorite
P	Pyrite
G	Gouge (Silt and/or Clay)
B	Breccia
GROUT	Grout
R-(Deg.)	Rake of slickensides, where measured
BLANK	Not measured or indeterminant
F	Faint slickensides

DEGREE OF WEATHERING

TERM	DESCRIPTION
Unweathered (U)	No evidence of any chemical or mechanical alteration.
Slightly Weathered (SW)	Slight discoloration on surface, slight alteration along discontinuities, less than 10 percent of the rock volume altered.
Moderately Weathered (MW)	Discoloring evident, surface pitted and altered with alteration penetrating well below rock surfaces, weathering "halos" evident, 10 to 50 percent of the rock altered.
Highly Weathered (HW)	Entire mass discolored, alteration pervading nearly all of the rock with some pockets of slightly weathered rock noticeable, some minerals leached away.
Decomposed (D)	Rock reduced to a soil with relicit rock texture, generally molded and crumbled by hand.

ABBREVIATIONS

RQD = Rock Quality Designation
JRC = Joint Roughness Coefficient
RMR = Rock Mass Rating
Q* = Modified Tunneling Quality Index
UCS = Unconfined Compressive Strength
N = Northing, E = Easting, ft = feet
deg = degrees, in. = inch
psi = pounds per square inch
R-1 = Run Number

NOTES

1. The contacts represent the approximate boundaries between lithology types, and the transition may be gradual.
2. The discussion in the text of this report is necessary for a proper understanding of the nature of the subsurface materials.
3. The locations of the discontinuties shown on the boring logs are approximate. For clarity, not all of the discontinuties are shown. Refer to the rock core photographs in Appendix B for additional information.

Howard Hanson Dam
Fish Passage Facility
Eagle Gorge, Washington

LOG OF BORING 01-DD-224

February 2004 21-1-09317-003

SHANNON & WILSON, INC.
Geotechnical and Environmental Consultants

FIG. A-5
Sheet 3 of 3

ROCK_LOG 21-09317.GPJ 21-09317.GPJ 2/4/04

LITHOLOGY DESCRIPTION

Approx. Coordinates: N: 102,456 E: 1,763,458

Depth (ft)	Lithology
1.3	Brown and gray, slightly silty to silty, sandy GRAVEL; moist; GP-GM/GM.
4.7	Basaltic Andesite: Moderate strength, dark gray, moderately fractured, unweathered to slightly weathered, scattered chlorite and calcite infilling.
5.4	Andesite: Moderate strength, red-brown and green-gray, unweathered.
	Basaltic Andesite: Moderate strength; dark gray; moderately to highly fractured; slightly weathered to unweathered; scattered slickensides; abundant calcite, chlorite, and pyrite infilling.
	- Increasing fine to medium sand-sized mafic phenochrysts below 13.0 feet.
	- Abundant calcite stringers from 14.0 to 15.0 feet.
20.3	Andesite: Moderate strength, green-gray ground mass with basaltic andesite breccia clasts, moderately fractured, unweathered to slightly weathered, scattered brown fracture staining.
23.2	Basaltic Andesite: Moderate strength, dark gray, highly fractured, unweathered, abundant calcite infilling.
27.3	Andesite Pyroclastite: Moderate strength, gray with light gray inclusions, moderately fractured, unweathered, scattered zones with abundant calcite infilling.
	- Contorted flow texture and low strength from 39.0 to 40.2 feet.
43.4	- 60-degree igneous contact at 43.4 feet.
	Andesite: Moderate strength, gray, moderately fractured, unweathered, aphanitic, abundant healed fractures.
45.7	
49.3	Andesite Pyroclastite: Low to moderate strength, light gray, highly brecciated, slightly weathered to highly

Symbol | Samples (R-1 … R-14) | Elev. (ft): 1140, 1130, 1120, 1110

Discontinuity Data: Infilling | Angle | Symbol

RQD and Recovery (%) | Weathering Index (U, SW, MW, HW, D) | Strength Index | JRC | RMR | Q*

RQD (%) Recovery (%)

BOREHOLE DATA

Plunge = 50° Azimuth = 55 ° Total Depth = 149.6 ft.
Ground Surface Elevation = 1143.0 ft. (+/-) Depth in Rock = 148.3 ft.

STRENGTH INDEX

See Figure A-1

TERM	INDEX
Very Low	0-1.5
Low	1.5-2.5
Moderate	2.5-3.5
Medium High	3.5-4.5
High	4.5-6
Very High	>=6

DISCONTINUITY SPACING

TERM	SPACING*
Unfractured	>6 ft.
Slightly Fractured	2 to 6 ft.
Moderately Fractured	8 to 24 in.
Highly Fractured	2 to 8 in.
Intensely Fractured	< 2 in.

*apparent spacing along core axis

DISCONTINUITY DATA

ANGLE: Degrees relative to plane horizontal to core axis, (-) below plane

SYMBOL: Rubble Zone, Gouge Zone, Core Loss

INFILLING

BO	Brown to Yellow-Brown Coloration
C	Calcite
CH	Chlorite
P	Pyrite
G	Gouge (Silt and/or Clay)
B	Breccia
GROUT	Grout
R-(Deg.)	Rake of slickensides, where measured
BLANK	Not measured or indeterminant
F	Faint slickensides

DEGREE OF WEATHERING

TERM	DESCRIPTION
Unweathered (U)	No evidence of any chemical or mechanical alteration.
Slightly Weathered (SW)	Slight discoloration on surface, slight alteration along discontinuities, less than 10 percent of the rock volume altered.
Moderately Weathered (MW)	Discoloring evident, surface pitted and altered with alteration penetrating well below rock surfaces, weathering "halos" evident, 10 to 50 percent of the rock altered.
Highly Weathered (HW)	Entire mass discolored, alteration pervading nearly all of the rock with some pockets of slightly weathered rock noticeable, some minerals leached away.
Decomposed (D)	Rock reduced to a soil with relicit rock texture, generally molded and crumbled by hand.

ABBREVIATIONS

RQD = Rock Quality Designation
JRC = Joint Roughness Coefficient
RMR = Rock Mass Rating
Q* = Modified Tunneling Quality Index
UCS = Unconfined Compressive Strength
N = Northing, E = Easting, ft = feet
deg = degrees, in. = inch
psi = pounds per square inch
R-1 = Run Number

NOTES

1. The contacts represent the approximate boundaries between lithology types, and the transition may be gradual.
2. The discussion in the text of this report is necessary for a proper understanding of the nature of the subsurface materials.
3. The locations of the discontinuties shown on the boring logs are approximate. For clarity, not all of the discontinuties are shown. Refer to the rock core photographs in Appendix B for additional information.

Howard Hanson Dam
Fish Passage Facility
Eagle Gorge, Washington

LOG OF BORING 01-DD-225

February 2004 21-1-09317-003

SHANNON & WILSON, INC.
Geotechnical and Environmental Consultants

FIG. A-6
Sheet 1 of 3

ROCK_LOG 21-09317.GPJ 21-09317.GPJ 2/4/04

Depth (ft)	LITHOLOGY DESCRIPTION Approx. Coordinates: N: 102,456 E: 1,763,458	Symbol	Samples	Elev. (ft)	Discontinuity Data: Infilling	Discontinuity Data: Angle	Discontinuity Data: Symbol
	weathered, pyrite and calcite infilling. - 70-degree fault contact with gouge from 48.2 to 49.3 feet. Andesite: Moderate strength, gray to green-gray, 10 percent light gray calcite vesicle infillings, moderately fractured, unweathered, scattered calcite and pyrite vein filling. - Scattered dark gray inclusions with diffuse margins at 55.7 to 56.4 feet and at 58.1 feet.		R-15 R-16	1100	F,C C C	35 -85 -15 60 -68 50 60	
63.3	- 40-degree contact with gouge at 63.3 feet. Andesite: Moderate strength, gray, moderately to highly fractured, unweathered, aphanitic, abundant chlorite, calcite, and pyrite fracture filling. - Abundant healed brecciation below 63.9 feet. - Subtly grading to basaltic andesite below 70.5 feet.		R-17 R-18 R-19	1090	G,C F G,F F,G,C F,G,C F,G,C F,P P C C,P	-40 -35 60 30 70 -40 40 50 50 -5 20 -20 30 55 70 -60 -70 -60 -70	
83.7	Andesite Pyroclastite: Moderate strength, green-gray, moderately fractured, unweathered, scattered slickensides.		R-20 R-21 R-22	1080	C,CH F P,C P,C C,CH,P C,CH	-15 25 20 20 75 -75 -80 -60 -50 -70 -40 -65 35 -60 -65 -30 50 -55	
88.2	Basaltic Andesite: Moderate strength; dark gray; highly fractured; unweathered; scattered slickensides; abundant chlorite, calcite, and pyrite fracture filling.		R-23 R-24 R-25 R-26 R-27 R-28	1070	CH(1/4")C CH,P C P F,C C C G,CH	-15 70 0 -45 55 70 55 45 -80 50 20 -60 30 70 50 55	

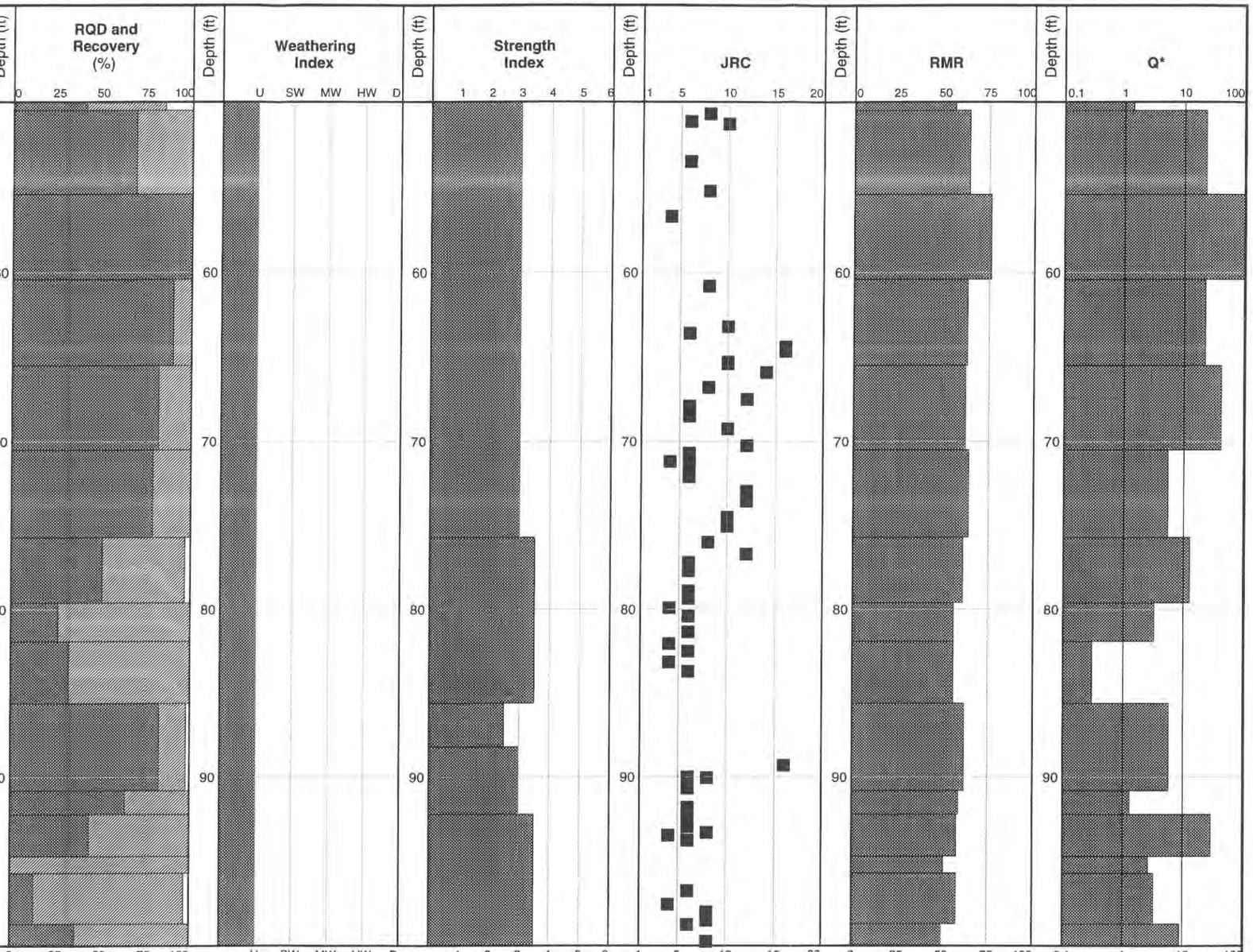

BOREHOLE DATA
Plunge = 50° Azimuth = 55 ° Total Depth = 149.6 ft.
Ground Surface Elevation = 1143.0 ft. (+/-) Depth in Rock = 148.3 ft.

STRENGTH INDEX
See Figure A-1

TERM	INDEX
Very Low	0-1.5
Low	1.5-2.5
Moderate	2.5-3.5
Medium High	3.5-4.5
High	4.5-6
Very High	>=6

DISCONTINUITY SPACING

TERM	SPACING*
Unfractured	>6 ft.
Slightly Fractured	2 to 6 ft.
Moderately Fractured	8 to 24 in.
Highly Fractured	2 to 8 in.
Intensely Fractured	< 2 in.

*apparent spacing along core axis

DISCONTINUITY DATA

ANGLE: Degrees relative to plane horizontal to core axis, (-) below plane

SYMBOL: Rubble Zone, Gouge Zone, Core Loss

INFILLING

BO	Brown to Yellow-Brown Coloration
C	Calcite
CH	Chlorite
P	Pyrite
G	Gouge (Silt and/or Clay)
B	Breccia
GROUT	Grout
R-(Deg.)	Rake of slickensides, where measured
BLANK	Not measured or indeterminant
F	Faint slickensides

DEGREE OF WEATHERING

TERM	DESCRIPTION
Unweathered (U)	No evidence of any chemical or mechanical alteration.
Slightly Weathered (SW)	Slight discoloration on surface, slight alteration along discontinuities, less than 10 percent of the rock volume altered.
Moderately Weathered (MW)	Discoloring evident, surface pitted and altered with alteration penetrating well below rock surfaces, weathering "halos" evident, 10 to 50 percent of the rock altered.
Highly Weathered (HW)	Entire mass discolored, alteration pervading nearly all of the rock with some pockets of slightly weathered rock noticeable, some minerals leached away.
Decomposed (D)	Rock reduced to a soil with relicit rock texture, generally molded and crumbled by hand.

ABBREVIATIONS

RQD = Rock Quality Designation
JRC = Joint Roughness Coefficient
RMR = Rock Mass Rating
Q* = Modified Tunneling Quality Index
UCS = Unconfined Compressive Strength
N = Northing, E = Easting, ft = feet
deg = degrees, in. = inch
psi = pounds per square inch
R-1 = Run Number

NOTES

1. The contacts represent the approximate boundaries between lithology types, and the transition may be gradual.
2. The discussion in the text of this report is necessary for a proper understanding of the nature of the subsurface materials.
3. The locations of the discontinuties shown on the boring logs are approximate. For clarity, not all of the discontinuties are shown. Refer to the rock core photographs in Appendix B for additional information.

Howard Hanson Dam
Fish Passage Facility
Eagle Gorge, Washington

LOG OF BORING 01-DD-225

February 2004 21-1-09317-003

SHANNON & WILSON, INC.
Geotechnical and Environmental Consultants

FIG. A-6
Sheet 2 of 3

ROCK_LOG 21-09317.GPJ 21-09317.GPJ 2/4/04

LITHOLOGY DESCRIPTION

Approx. Coordinates: N: 102,456 E: 1,763,458

Basaltic Andesite (cont.)

- Abundant calcite stringers/healed brecciation with scattered vertical fractures between 131.8 and 133.5 feet.
- Healed brecciation with calcite and pyrite fracture filling from 136.4 to 138.0 feet.

BOTTOM OF BORING AT 149.6 FEET
COMPLETED 8/1/2001

149.6

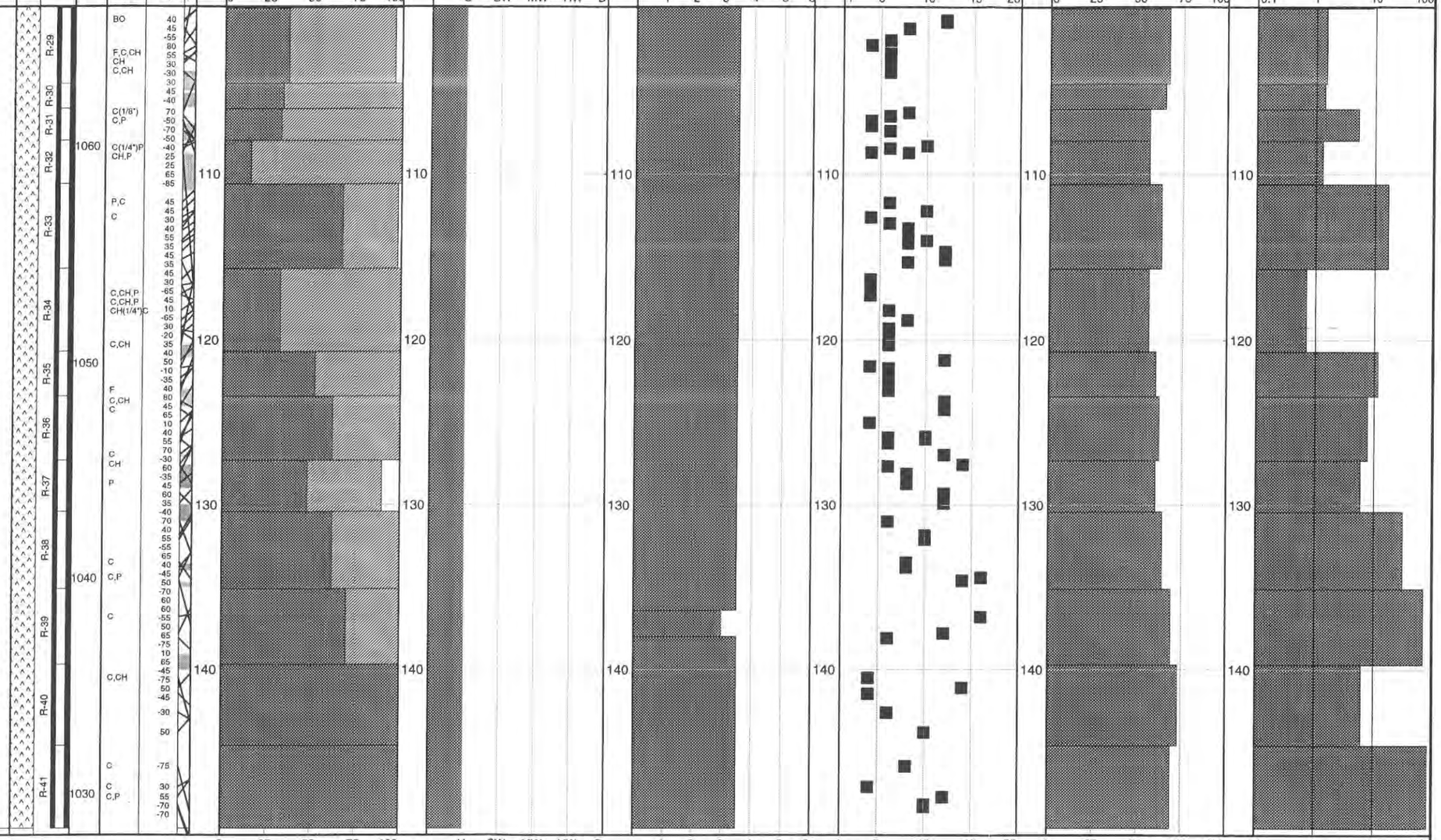

BOREHOLE DATA

Plunge = 50° Azimuth = 55 ° Total Depth = 149.6 ft.
Ground Surface Elevation = 1143.0 ft. (+/-) Depth in Rock = 148.3 ft.

STRENGTH INDEX

See Figure A-1

TERM	INDEX
Very Low	0-1.5
Low	1.5-2.5
Moderate	2.5-3.5
Medium High	3.5-4.5
High	4.5-6
Very High	>=6

DISCONTINUITY SPACING

TERM	SPACING*
Unfractured	>6 ft.
Slightly Fractured	2 to 6 ft.
Moderately Fractured	8 to 24 in.
Highly Fractured	2 to 8 in.
Intensely Fractured	< 2 in.

*apparent spacing along core axis

DISCONTINUITY DATA

ANGLE: Degrees relative to plane horizontal to core axis, (-) below plane

SYMBOL: Rubble Zone, Gouge Zone, Core Loss

INFILLING

BO	Brown to Yellow-Brown Coloration
C	Calcite
CH	Chlorite
P	Pyrite
G	Gouge (Silt and/or Clay)
B	Breccia
GROUT	Grout
R-(Deg.)	Rake of slickensides, where measured
BLANK	Not measured or indeterminant
F	Faint slickensides

RQD (%) Recovery (%)

DEGREE OF WEATHERING

TERM	DESCRIPTION
Unweathered (U)	No evidence of any chemical or mechanical alteration.
Slightly Weathered (SW)	Slight discoloration on surface, slight alteration along discontinuities, less than 10 percent of the rock volume altered.
Moderately Weathered (MW)	Discoloring evident, surface pitted and altered with alteration penetrating well below rock surfaces, weathering "halos" evident, 10 to 50 percent of the rock altered.
Highly Weathered (HW)	Entire mass discolored, alteration pervading nearly all of the rock with some pockets of slightly weathered rock noticeable, some minerals leached away.
Decomposed (D)	Rock reduced to a soil with relicit rock texture, generally molded and crumbled by hand.

ABBREVIATIONS

RQD = Rock Quality Designation
JRC = Joint Roughness Coefficient
RMR = Rock Mass Rating
Q* = Modified Tunneling Quality Index
UCS = Unconfined Compressive Strength
N = Northing, E = Easting, ft = feet
deg = degrees, in. = inch
psi = pounds per square inch
R-1 = Run Number

NOTES

1. The contacts represent the approximate boundaries between lithology types, and the transition may be gradual.
2. The discussion in the text of this report is necessary for a proper understanding of the nature of the subsurface materials.
3. The locations of the discontinuities shown on the boring logs are approximate. For clarity, not all of the discontinuities are shown. Refer to the rock core photographs in Appendix B for additional information.

Howard Hanson Dam
Fish Passage Facility
Eagle Gorge, Washington

LOG OF BORING 01-DD-225

February 2004 21-1-09317-003

SHANNON & WILSON, INC.
Geotechnical and Environmental Consultants

FIG. A-6
Sheet 3 of 3

ROCK_LOG 21-09317.GPJ 21-09317.GPJ 2/4/04

LITHOLOGY DESCRIPTION

Approx. Coordinates: N: 102,447 E: 1,763,393

Brown, silty, sandy, fine GRAVEL; moist; (Road Fill) GM.

- Scattered wood debris towards bottom.

4.3

Andesite Pyroclastite: Moderate strength, light gray to pink, unweathered, unfractured, abundant calcite infilling, scattered brecciated porphyritic andesite zones.

7.6

Andesite: Moderate strength, gray ground mass with red-brown inclusions of porphyritic andesite breccia fragments with irregular margins, slightly to moderately fractured, unweathered to slightly weathered.

- Increasing pyroclastic texture from 13.2 feet to 30.1 feet.

- Less strength at 38.1 feet.
- Faint flow texture between 39.4 and 41.1 feet.

Symbol: R-1, R-2, R-3, R-4, R-5, R-6, R-7, R-8, R-9, R-10, R-11

Samples

Elev. (ft): 1160, 1150, 1140, 1130

Discontinuity Data

Infilling	Angle	Symbol
BO	-50	
BO	-25	
BO	-10	
BO	70	
BO	10	
BO	30	
BO	50	
C,B	-15	
C,F	10	
BO	40	
	-35	
	-70	
	25	
	-80	
	40	
	30	
F	20	
F	-55	
	30	
	-60	

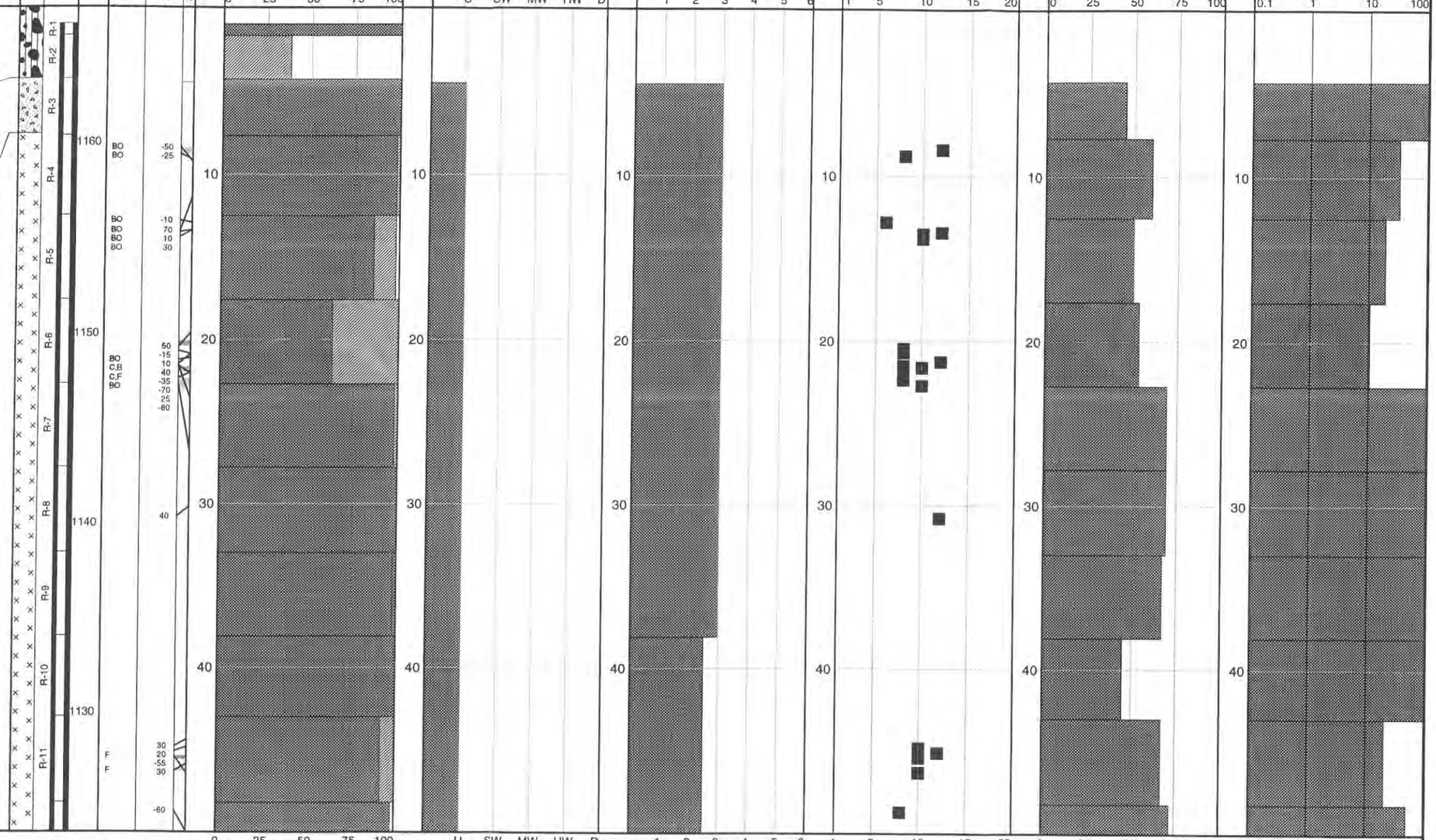

BOREHOLE DATA

Plunge = 60° Azimuth = 305 ° Total Depth = 165 ft.
Ground Surface Elevation = 1167.0 ft. (+/-) Depth in Rock = 160.7 ft.

STRENGTH INDEX

See Figure A-1

TERM	INDEX
Very Low	0-1.5
Low	1.5-2.5
Moderate	2.5-3.5
Medium High	3.5-4.5
High	4.5-6
Very High	>=6

DISCONTINUITY SPACING

TERM	SPACING*
Unfractured	>6 ft.
Slightly Fractured	2 to 6 ft.
Moderately Fractured	8 to 24 in.
Highly Fractured	2 to 8 in.
Intensely Fractured	< 2 in.

*apparent spacing along core axis

DISCONTINUITY DATA

ANGLE: Degrees relative to plane horizontal to core axis, (-) below plane

SYMBOL: Rubble Zone, Gouge Zone, Core Loss

INFILLING

BO	Brown to Yellow-Brown Coloration
C	Calcite
CH	Chlorite
P	Pyrite
G	Gouge (Silt and/or Clay)
B	Breccia
GROUT	Grout
R-(Deg.)	Rake of slickensides, where measured
BLANK	Not measured or indeterminant
F	Faint slickensides

DEGREE OF WEATHERING

TERM	DESCRIPTION
Unweathered (U)	No evidence of any chemical or mechanical alteration.
Slightly Weathered (SW)	Slight discoloration on surface, slight alteration along discontinuities, less than 10 percent of the rock volume altered.
Moderately Weathered (MW)	Discoloring evident, surface pitted and altered with alteration penetrating well below rock surfaces, weathering "halos" evident, 10 to 50 percent of the rock altered.
Highly Weathered (HW)	Entire mass discolored, alteration pervading nearly all of the rock with some pockets of slightly weathered rock noticeable, some minerals leached away.
Decomposed (D)	Rock reduced to a soil with relicit rock texture, generally molded and crumbled by hand.

ABBREVIATIONS

RQD = Rock Quality Designation
JRC = Joint Roughness Coefficient
RMR = Rock Mass Rating
Q* = Modified Tunneling Quality Index
UCS = Unconfined Compressive Strength
N = Northing, E = Easting, ft = feet
deg = degrees, in. = inch
psi = pounds per square inch
R-1 = Run Number

NOTES

1. The contacts represent the approximate boundaries between lithology types, and the transition may be gradual.
2. The discussion in the text of this report is necessary for a proper understanding of the nature of the subsurface materials.
3. The locations of the discontinuties shown on the boring logs are approximate. For clarity, not all of the discontinuties are shown. Refer to the rock core photographs in Appendix B for additional information.

Howard Hanson Dam
Fish Passage Facility
Eagle Gorge, Washington

LOG OF BORING 01-DD-226

February 2004 21-1-09317-003

SHANNON & WILSON, INC.
Geotechnical and Environmental Consultants

FIG. A-7
Sheet 1 of 4

ROCK_LOG 21-09317.GPJ 21-09317.GPJ 2/4/04

LITHOLOGY DESCRIPTION

Approx. Coordinates: N: 102,447 E: 1,763,393

Andesite (cont.)
- Scattered healed fractures with calcite infilling at 51.1 feet.
- Aphanitic andesite from 54.8 to 55.3 feet.

60.4 - Distinct flow texture from 59.8 feet to 60.4 feet.
Andesite Pyroclastite: Moderate strength, light gray, welded pyroclastic texture, slightly fractured, unweathered.
- Flow texture between 68.2 and 70.4 feet.

70.9 Andesite: Moderate strength, light gray, unweathered, aphanitic, moderately fractured.

73.5 - 85-degree flow contact at 73.5 feet.
Andesite: Moderate strength, gray, moderately to highly fractured, unweathered, scattered aphanitic zones.
- Becomes red-brown at 77.4 feet. Slight increase in strength.

- Slightly fractured at 93.0 feet.
- Scattered medium- to high-angle healed joints with calcite infilling.

Symbol / Samples: R-12, R-13, R-14, R-15, R-16, R-17, R-18, R-19, R-20, R-21

Elev. (ft): 1120, 1110, 1100, 1090

Discontinuity Data

Infilling	Angle	Symbol
F	10	
F	30	
	25	
	15	
	40	
	50	
BO	25	
	70	
C	50	
	10	
	70	
C(1/4")P	-65	
C	-40	
F	-10	
	50	
P	30	
C	-40	
C	-60	
C,BO	-70	
C,BO	-40	
	45	
BO	-80	
BO	5	
C	-60	
BO	-20	
BO	85	
C	-70	
C,F	20	

RQD and Recovery (%): Depth (ft) 60, 70, 80, 90; 0 25 50 75 100

Weathering Index: U SW MW HW D

Strength Index: 1 2 3 4 5 6

JRC: 1 5 10 15 20

RMR: 0 25 50 75 100

Q*: 0.1 1 10 100

RQD (%) ▩ Recovery (%) ▨

BOREHOLE DATA

Plunge = 60° Azimuth = 305 ° Total Depth = 165 ft.
Ground Surface Elevation = 1167.0 ft. (+/-) Depth in Rock = 160.7 ft.

STRENGTH INDEX

See Figure A-1

TERM	INDEX
Very Low	0-1.5
Low	1.5-2.5
Moderate	2.5-3.5
Medium High	3.5-4.5
High	4.5-6
Very High	>=6

DISCONTINUITY SPACING

TERM	SPACING*
Unfractured	>6 ft.
Slightly Fractured	2 to 6 ft.
Moderately Fractured	8 to 24 in.
Highly Fractured	2 to 8 in.
Intensely Fractured	< 2 in.

*apparent spacing along core axis

DISCONTINUITY DATA

ANGLE: Degrees relative to plane horizontal to core axis, (-) below plane

SYMBOL: Rubble Zone, Gouge Zone, Core Loss

INFILLING

BO	Brown to Yellow-Brown Coloration
C	Calcite
CH	Chlorite
P	Pyrite
G	Gouge (Silt and/or Clay)
B	Breccia
GROUT	Grout
R-(Deg.)	Rake of slickensides, where measured
BLANK	Not measured or indeterminant
F	Faint slickensides

DEGREE OF WEATHERING

TERM	DESCRIPTION
Unweathered (U)	No evidence of any chemical or mechanical alteration.
Slightly Weathered (SW)	Slight discoloration on surface, slight alteration along discontinuities, less than 10 percent of the rock volume altered.
Moderately Weathered (MW)	Discoloring evident, surface pitted and altered with alteration penetrating well below rock surfaces, weathering "halos" evident, 10 to 50 percent of the rock altered.
Highly Weathered (HW)	Entire mass discolored, alteration pervading nearly all of the rock with some pockets of slightly weathered rock noticeable, some minerals leached away.
Decomposed (D)	Rock reduced to a soil with relicit rock texture, generally molded and crumbled by hand.

ABBREVIATIONS

RQD = Rock Quality Designation
JRC = Joint Roughness Coefficient
RMR = Rock Mass Rating
Q* = Modified Tunneling Quality Index
UCS = Unconfined Compressive Strength
N = Northing, E = Easting, ft = feet
deg = degrees, in. = inch
psi = pounds per square inch
R-1 = Run Number

NOTES
1. The contacts represent the approximate boundaries between lithology types, and the transition may be gradual.
2. The discussion in the text of this report is necessary for a proper understanding of the nature of the subsurface materials.
3. The locations of the discontinuties shown on the boring logs are approximate. For clarity, not all of the discontinuties are shown. Refer to the rock core photographs in Appendix B for additional information.

Howard Hanson Dam
Fish Passage Facility
Eagle Gorge, Washington

LOG OF BORING 01-DD-226

February 2004 21-1-09317-003

SHANNON & WILSON, INC.
Geotechnical and Environmental Consultants

FIG. A-7
Sheet 2 of 4

ROCK_LOG 21-09317.GPJ 21-09317.GPJ 2/4/04

Depth (ft)	LITHOLOGY DESCRIPTION	Symbol	Samples	Elev. (ft)	Discontinuity Data: Infilling	Discontinuity Data: Angle	Discontinuity Data: Symbol
	Approx. Coordinates: N: 102,447 E: 1,763,393						
	Andesite (cont.)		R-22	1080			
			R-23				
						35	
			R-24			-40	
					G,B	55	
				1070	BO	-35	
			R-25				
			R-26				
	- Gravel-sized breccia clasts of various igneous textures at 123.0 feet.			1060	BO,G,B	45	
			R-27				
131.3	- Gradational contact at 131.3 feet.		R-28		C,G	-40	
	Andesite: Moderate strength, gray ground mass with faint green-gray and red-gray breccia inclusions, slightly fractured, unweathered, abundant 2 to 5 mm crystals.					-50	
				1050	F	-20	
			R-29				
			R-30				
					BO	-35	
			R-31	1040			

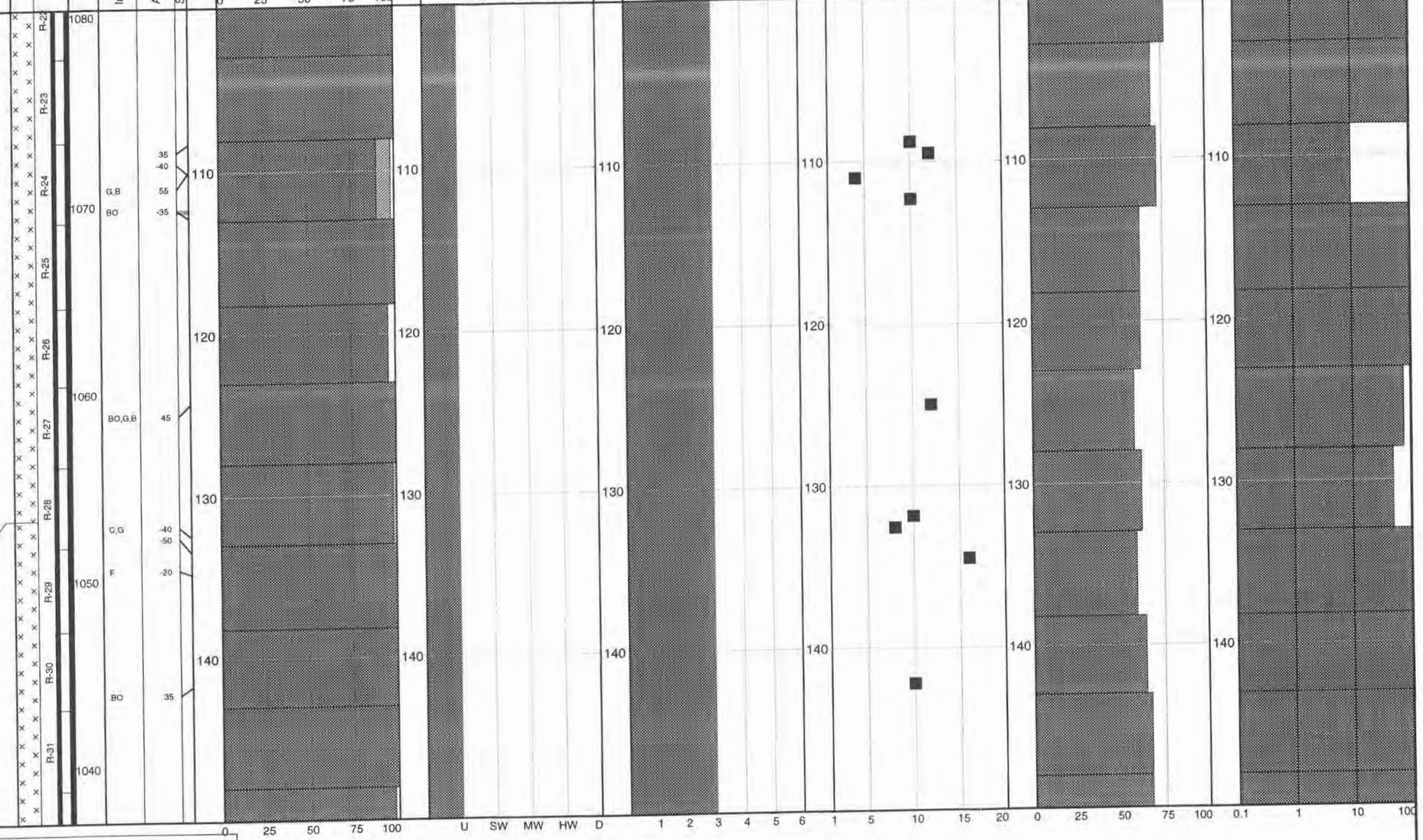

RQD (%) Recovery (%)

BOREHOLE DATA

Plunge = 60° Azimuth = 305 ° Total Depth = 165 ft.
Ground Surface Elevation = 1167.0 ft. (+/-) Depth in Rock = 160.7 ft.

STRENGTH INDEX

See Figure A-1

TERM	INDEX
Very Low	0-1.5
Low	1.5-2.5
Moderate	2.5-3.5
Medium High	3.5-4.5
High	4.5-6
Very High	>=6

DISCONTINUITY SPACING

TERM	SPACING*
Unfractured	>6 ft.
Slightly Fractured	2 to 6 ft.
Moderately Fractured	8 to 24 in.
Highly Fractured	2 to 8 in.
Intensely Fractured	< 2 in.

*apparent spacing along core axis

DISCONTINUITY DATA

ANGLE: Degrees relative to plane horizontal to core axis, (-) below plane

SYMBOL: Rubble Zone, Gouge Zone, Core Loss

INFILLING

BO	Brown to Yellow-Brown Coloration
C	Calcite
CH	Chlorite
P	Pyrite
G	Gouge (Silt and/or Clay)
B	Breccia
GROUT	Grout
R-(Deg.)	Rake of slickensides, where measured
BLANK	Not measured or indeterminant
F	Faint slickensides

DEGREE OF WEATHERING

TERM	DESCRIPTION
Unweathered (U)	No evidence of any chemical or mechanical alteration.
Slightly Weathered (SW)	Slight discoloration on surface, slight alteration along discontinuities, less than 10 percent of the rock volume altered.
Moderately Weathered (MW)	Discoloring evident, surface pitted and altered with alteration penetrating well below rock surfaces, weathering "halos" evident, 10 to 50 percent of the rock altered.
Highly Weathered (HW)	Entire mass discolored, alteration pervading nearly all of the rock with some pockets of slightly weathered rock noticeable, some minerals leached away.
Decomposed (D)	Rock reduced to a soil with relicit rock texture, generally molded and crumbled by hand.

ABBREVIATIONS

RQD = Rock Quality Designation
JRC = Joint Roughness Coefficient
RMR = Rock Mass Rating
Q* = Modified Tunneling Quality Index
UCS = Unconfined Compressive Strength
N = Northing, E = Easting, ft = feet
deg = degrees, in. = inch
psi = pounds per square inch
R-1 = Run Number

NOTES

1. The contacts represent the approximate boundaries between lithology types, and the transition may be gradual.
2. The discussion in the text of this report is necessary for a proper understanding of the nature of the subsurface materials.
3. The locations of the discontinuties shown on the boring logs are approximate. For clarity, not all of the discontinuties are shown. Refer to the rock core photographs in Appendix B for additional information.

Howard Hanson Dam
Fish Passage Facility
Eagle Gorge, Washington

LOG OF BORING 01-DD-226

February 2004 21-1-09317-003

SHANNON & WILSON, INC.
Geotechnical and Environmental Consultants

FIG. A-7
Sheet 3 of 4

ROCK_LOG 21-09317.GPJ 21-09317.GPJ 2/4/04

Depth (ft)	LITHOLOGY DESCRIPTION Approx. Coordinates: N: 102,447 E: 1,763,393	Symbol	Samples	Elev. (ft)	Discontinuity Data: Infilling	Discontinuity Data: Angle	Discontinuity Data: Symbol
	Andesite (cont.)		R-32 R-33 R-34 R-35	1030 1020 1010 1000	C G	35 40 50 50	
165.0	BOTTOM OF BORING AT 165.0 FEET COMPLETED 8/3/2001						

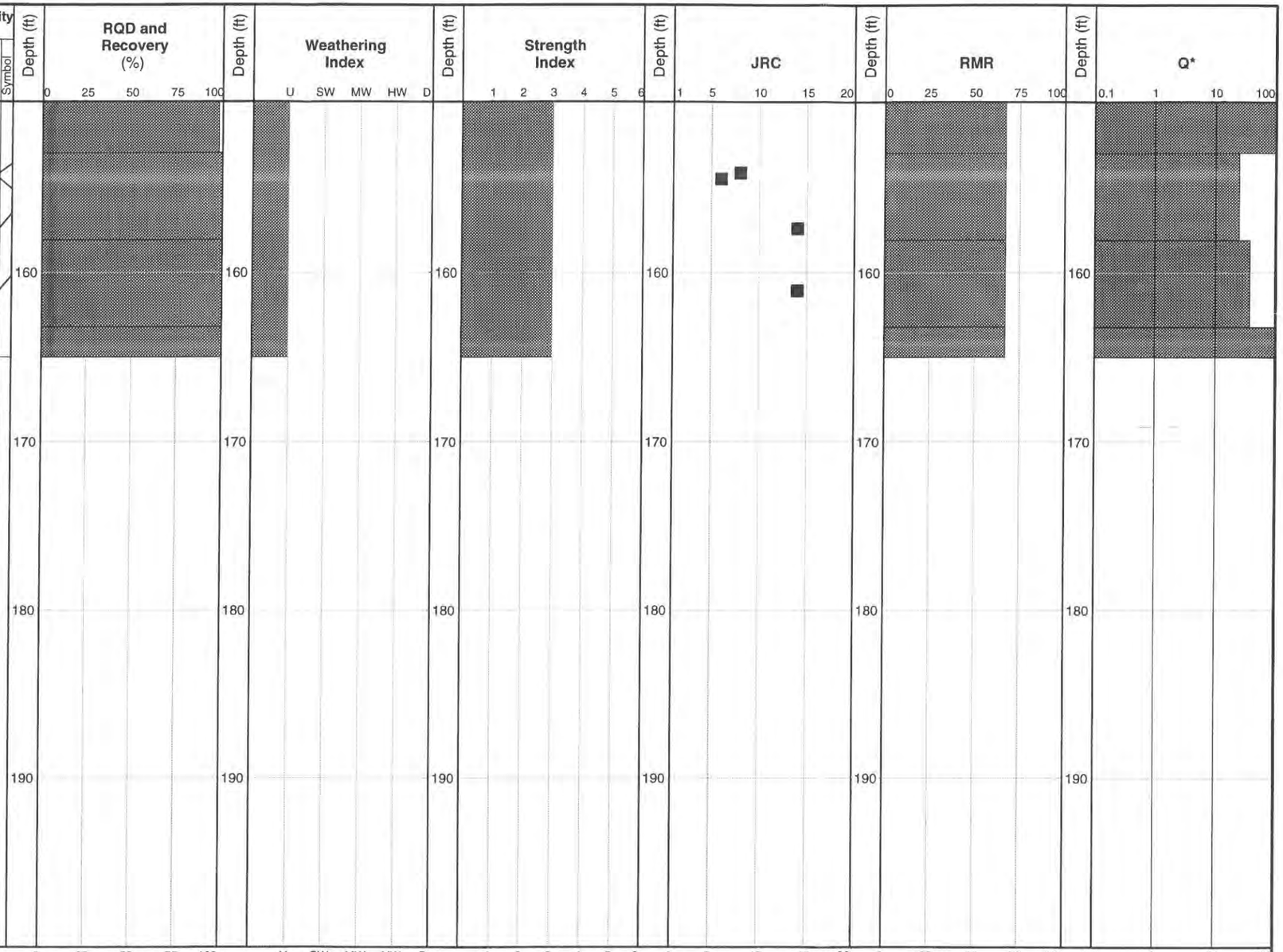

BOREHOLE DATA

Plunge = 60° Azimuth = 305 ° Total Depth = 165 ft.
Ground Surface Elevation = 1167.0 ft. (+/-) Depth in Rock = 160.7 ft.

STRENGTH INDEX

See Figure A-1

TERM	INDEX
Very Low	0-1.5
Low	1.5-2.5
Moderate	2.5-3.5
Medium High	3.5-4.5
High	4.5-6
Very High	>=6

DISCONTINUITY SPACING

TERM	SPACING*
Unfractured	>6 ft.
Slightly Fractured	2 to 6 ft.
Moderately Fractured	8 to 24 in.
Highly Fractured	2 to 8 in.
Intensely Fractured	< 2 in.

*apparent spacing along core axis

DISCONTINUITY DATA

ANGLE: Degrees relative to plane horizontal to core axis, (-) below plane

SYMBOL: Rubble Zone, Gouge Zone, Core Loss

INFILLING

BO	Brown to Yellow-Brown Coloration
C	Calcite
CH	Chlorite
P	Pyrite
G	Gouge (Silt and/or Clay)
B	Breccia
GROUT	Grout
R-(Deg.)	Rake of slickensides, where measured
BLANK	Not measured or indeterminant
F	Faint slickensides

DEGREE OF WEATHERING

TERM	DESCRIPTION
Unweathered (U)	No evidence of any chemical or mechanical alteration.
Slightly Weathered (SW)	Slight discoloration on surface, slight alteration along discontinuities, less than 10 percent of the rock volume altered.
Moderately Weathered (MW)	Discoloring evident, surface pitted and altered with alteration penetrating well below rock surfaces, weathering "halos" evident, 10 to 50 percent of the rock altered.
Highly Weathered (HW)	Entire mass discolored, alteration pervading nearly all of the rock with some pockets of slightly weathered rock noticeable, some minerals leached away.
Decomposed (D)	Rock reduced to a soil with relicit rock texture, generally molded and crumbled by hand.

ABBREVIATIONS

RQD = Rock Quality Designation
JRC = Joint Roughness Coefficient
RMR = Rock Mass Rating
Q* = Modified Tunneling Quality Index
UCS = Unconfined Compressive Strength
N = Northing, E = Easting, ft = feet
deg = degrees, in. = inch
psi = pounds per square inch
R-1 = Run Number

NOTES

1. The contacts represent the approximate boundaries between lithology types, and the transition may be gradual.
2. The discussion in the text of this report is necessary for a proper understanding of the nature of the subsurface materials.
3. The locations of the discontinuties shown on the boring logs are approximate. For clarity, not all of the discontinuities are shown. Refer to the rock core photographs in Appendix B for additional information.

Howard Hanson Dam
Fish Passage Facility
Eagle Gorge, Washington

LOG OF BORING 01-DD-226

February 2004 21-1-09317-003

SHANNON & WILSON, INC.
Geotechnical and Environmental Consultants

FIG. A-7
Sheet 4 of 4

ROCK_LOG 21-09317.GPJ 21-09317.GPJ 2/4/04

LITHOLOGY DESCRIPTION

Approx. Coordinates: N: 102,483 E: 1,763,389

Gray-brown, slightly silty, sandy GRAVEL; moist to dry; (Road Fill) GP-GM.

2.3 Andesite Pyroclastite: Moderate strength, light gray, abundant gravel-sized inclusions, moderately fractured, unweathered, pyrite and calcite infillings.

- Welded tuff breccia texture at 11.1 feet.

- Distinct flow texture between 23.5 and 27.3 feet.

31.7 - Healed brecciated texture with calcite and pyrite at 30.8 feet.

33.3 - 80 degree contact at 31.7 feet.

Andesite Pyroclastite: Moderate strength, light gray, tuffaceous texture.

Andesite Pyroclastite: Moderate strength, light gray, sand- to gravel-sized fragments, moderately fractured, unweathered, brecciated welded tuff texture, abundant pyrite and calcite infillings.

- Grades to dark gray ground mass at 43.3 feet.

- Fine gravel-sized pyrite nodules at 48.5 feet.

Symbol; Samples: R-1 R-2 R-3 R-4 R-5 R-6 R-7 R-8 R-9 R-10 R-11 R-12

Elev. (ft): 1150 1140 1130 1120 1110 1100

Discontinuity Data — Infilling / Angle / Symbol

Infilling	Angle	Symbol
	60	CL
C,P	65	
P	-45	
C	-10	
C,P,B	50	
B	-50	
C	45	
	35	
	30	
	-75	
	-80	
C	-75	
	-70	
	-85	
C	-30	
	10	
	20	
	25	
G,B	-80	
C	60	
	-60	
	-50	
G,B,C	50	
	-55	
	-85	
	60	
BO	-25	
	-45	
	-30	
	15	
B,G,P	15	
	10	
B,G,P		
BO	0	
B,G	-10	

Depth (ft) 0 10 20 30 40 50

RQD and Recovery (%): 0 25 50 75 100

Weathering Index: U SW MW HW D

Strength Index: 1 2 3 4 5 6

JRC: 1 5 10 15 20

RMR: 0 25 50 75 100

Q*: 0.1 1 10 100

RQD (%) Recovery (%)

BOREHOLE DATA

Plunge = 90° Azimuth = N/A °

Total Depth = 150 ft.

Ground Surface Elevation = 1151.4 ft. (+/-) Depth in Rock = 147.7 ft.

STRENGTH INDEX

See Figure A-1

TERM	INDEX
Very Low	0-1.5
Low	1.5-2.5
Moderate	2.5-3.5
Medium High	3.5-4.5
High	4.5-6
Very High	>=6

DISCONTINUITY SPACING

TERM	SPACING*
Unfractured	>6 ft.
Slightly Fractured	2 to 6 ft.
Moderately Fractured	8 to 24 in.
Highly Fractured	2 to 8 in.
Intensely Fractured	< 2 in.

*apparent spacing along core axis

DISCONTINUITY DATA

ANGLE: Degrees relative to plane horizontal to core axis, (-) below plane

SYMBOL: Rubble Zone, Gouge Zone, Core Loss

INFILLING

BO	Brown to Yellow-Brown Coloration
C	Calcite
CH	Chlorite
P	Pyrite
G	Gouge (Silt and/or Clay)
B	Breccia
GROUT	Grout
R-(Deg.)	Rake of slickensides, where measured
BLANK	Not measured or indeterminant
F	Faint slickensides

DEGREE OF WEATHERING

TERM	DESCRIPTION
Unweathered (U)	No evidence of any chemical or mechanical alteration.
Slightly Weathered (SW)	Slight discoloration on surface, slight alteration along discontinuities, less than 10 percent of the rock volume altered.
Moderately Weathered (MW)	Discoloring evident, surface pitted and altered with alteration penetrating well below rock surfaces, weathering "halos" evident, 10 to 50 percent of the rock altered.
Highly Weathered (HW)	Entire mass discolored, alteration pervading nearly all of the rock with some pockets of slightly weathered rock noticeable, some minerals leached away.
Decomposed (D)	Rock reduced to a soil with relicit rock texture, generally molded and crumbled by hand.

ABBREVIATIONS

RQD = Rock Quality Designation
JRC = Joint Roughness Coefficient
RMR = Rock Mass Rating
Q* = Modified Tunneling Quality Index
UCS = Unconfined Compressive Strength
N = Northing, E = Easting, ft = feet
deg = degrees, in. = inch
psi = pounds per square inch
R-1 = Run Number

NOTES

1. The contacts represent the approximate boundaries between lithology types, and the transition may be gradual.
2. The discussion in the text of this report is necessary for a proper understanding of the nature of the subsurface materials.
3. The locations of the discontinuties shown on the boring logs are approximate. For clarity, not all of the discontinuties are shown. Refer to the rock core photographs in Appendix B for additional information.

Howard Hanson Dam
Fish Passage Facility
Eagle Gorge, Washington

LOG OF BORING 01-DD-227

February 2004 21-1-09317-003

SHANNON & WILSON, INC.
Geotechnical and Environmental Consultants

FIG. A-8
Sheet 1 of 3

ROCK_LOG 21-09317.GPJ 21-09317.GPJ 2/4/04

LITHOLOGY DESCRIPTION

Approx. Coordinates: N: 102,483 E: 1,763,389

Depth (ft)	Lithology Description	Elev. (ft)
	Andesite Pyroclastite (cont.)	
65.1	Andesite: Moderate strength, gray to dark gray, abundant red-brown breccia fragments, moderately fractured, unweathered.	1090
73.0	Andesite: Moderate strength, gray, unfractured, unweathered, aphanitic.	1080
75.7	Andesite: Moderate strength, gray, sand- to gravel-sized breccia fragments, slightly fractured, unweathered, pyrite calcite infillings. - Abundant 1/8-inch calcite stringers between 80.3 and 81.4 feet. - Prominent calcite infilling at 85.0 feet.	1070
93.7	Basaltic Andesite: Moderate strength, dark gray with green-gray, medium sand-sized inclusions.	1060
95.5	Andesite: Moderate strength, gray with brown and gray breccia fragments, slightly fractured, unweathered, scattered slickensides and calcite.	1050

Samples: R-13, R-14, R-15, R-16, R-17, R-18, R-19, R-20, R-21, R-22, R-23

Depth (ft)	Discontinuity Data: Infilling	Angle	Symbol
60	F	50	
	C	-30	
		-30	
		35	
	F	35	
	G,B,C	-50	
	BO,G,B	50	
		50	
		75	
		55	
	C	55	
	BO	25	
70	C,BO	65	
	G,C	40	
80	C	35	
	G,B	-75	
	C	20	
	C	35	
		40	
		30	
90	BO	55	
	C	45	
100	C,G,B	50	

RQD and Recovery (%): 0 25 50 75 100

Weathering Index: U SW MW HW D

Strength Index: 1 2 3 4 5 6

JRC: 1 5 10 15 20

RMR: 0 25 50 75 100

Q*: 0.1 1 10 100

RQD (%) ■ Recovery (%) ▨

BOREHOLE DATA

Plunge = 90° Azimuth = N/A ° Total Depth = 150 ft.
Ground Surface Elevation = 1151.4 ft. (+/-) Depth in Rock = 147.7 ft.

STRENGTH INDEX

See Figure A-1

TERM	INDEX
Very Low	0-1.5
Low	1.5-2.5
Moderate	2.5-3.5
Medium High	3.5-4.5
High	4.5-6
Very High	>=6

DISCONTINUITY SPACING

TERM	SPACING*
Unfractured	>6 ft.
Slightly Fractured	2 to 6 ft.
Moderately Fractured	8 to 24 in.
Highly Fractured	2 to 8 in.
Intensely Fractured	< 2 in.

*apparent spacing along core axis

DISCONTINUITY DATA

ANGLE: Degrees relative to plane horizontal to core axis, (-) below plane

SYMBOL: Rubble Zone, Gouge Zone, Core Loss

INFILLING

BO	Brown to Yellow-Brown Coloration
C	Calcite
CH	Chlorite
P	Pyrite
G	Gouge (Silt and/or Clay)
B	Breccia
GROUT	Grout
R-(Deg.)	Rake of slickensides, where measured
BLANK	Not measured or indeterminant
F	Faint slickensides

DEGREE OF WEATHERING

TERM	DESCRIPTION
Unweathered (U)	No evidence of any chemical or mechanical alteration.
Slightly Weathered (SW)	Slight discoloration on surface, slight alteration along discontinuities, less than 10 percent of the rock volume altered.
Moderately Weathered (MW)	Discoloring evident, surface pitted and altered with alteration penetrating well below rock surfaces, weathering "halos" evident, 10 to 50 percent of the rock altered.
Highly Weathered (HW)	Entire mass discolored, alteration pervading nearly all of the rock with some pockets of slightly weathered rock noticeable, some minerals leached away.
Decomposed (D)	Rock reduced to a soil with relicit rock texture, generally molded and crumbled by hand.

ABBREVIATIONS

RQD = Rock Quality Designation
JRC = Joint Roughness Coefficient
RMR = Rock Mass Rating
Q* = Modified Tunneling Quality Index
UCS = Unconfined Compressive Strength
N = Northing, E = Easting, ft = feet
deg = degrees, in. = inch
psi = pounds per square inch
R-1 = Run Number

NOTES

1. The contacts represent the approximate boundaries between lithology types, and the transition may be gradual.
2. The discussion in the text of this report is necessary for a proper understanding of the nature of the subsurface materials.
3. The locations of the discontinuties shown on the boring logs are approximate. For clarity, not all of the discontinuities are shown. Refer to the rock core photographs in Appendix B for additional information.

Howard Hanson Dam
Fish Passage Facility
Eagle Gorge, Washington

LOG OF BORING 01-DD-227

February 2004 21-1-09317-003

SHANNON & WILSON, INC.
Geotechnical and Environmental Consultants

FIG. A-8
Sheet 2 of 3

ROCK_LOG 21-09317.GPJ 21-09317.GPJ 2/4/04

Depth (ft)	LITHOLOGY DESCRIPTION Approx. Coordinates: N: 102,483 E: 1,763,389	Symbol	Samples	Elev. (ft)	Discontinuity Data: Infilling	Discontinuity Data: Angle	Discontinuity Data: Symbol
	Andesite (cont.)		R-24	1040	BO G,B	10 30 45 60	
			R-25		B	45	
			R-26	1030	C,BO	45 60	
			R-27		BO	40	
						40	
			R-28	1020	B,G,R-10	70 35 10	
			R-29		G,B,BO	50 40	
						60	
					G	20 55	
	- Abundant "ghost" inclusions below 141.0 feet.		R-30	1010	C F,C	30 35	
			R-31			60	
150.0	BOTTOM OF BORING AT 150 FEET COMPLETED 8/8/2001		R-32	1000 990	G,C	70	

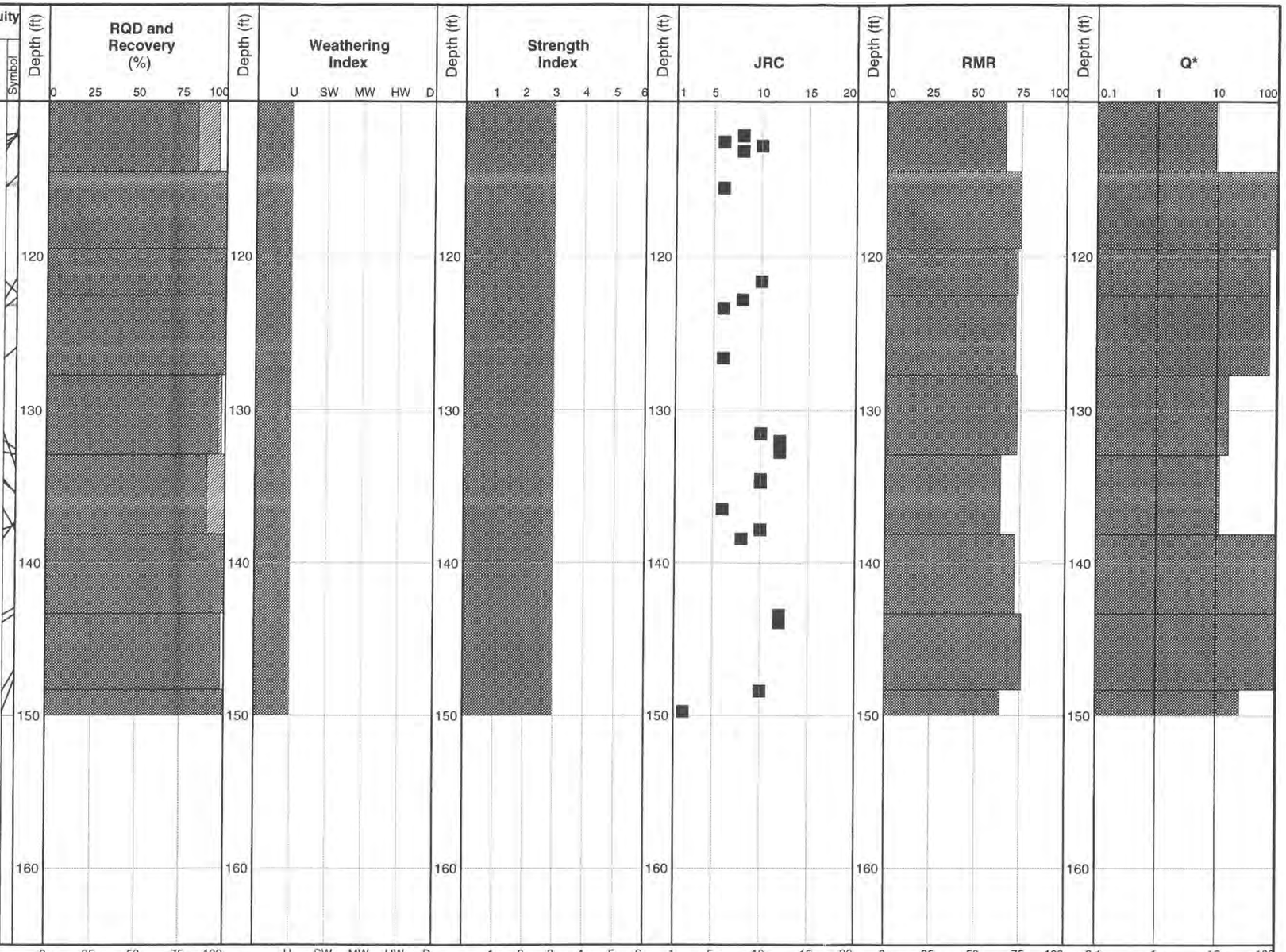

BOREHOLE DATA

Plunge = 90° Azimuth = N/A ° Total Depth = 150 ft.
Ground Surface Elevation = 1151.4 ft. (+/-) Depth in Rock = 147.7 ft.

STRENGTH INDEX

See Figure A-1

TERM	INDEX
Very Low	0-1.5
Low	1.5-2.5
Moderate	2.5-3.5
Medium High	3.5-4.5
High	4.5-6
Very High	>=6

DISCONTINUITY SPACING

TERM	SPACING*
Unfractured	>6 ft.
Slightly Fractured	2 to 6 ft.
Moderately Fractured	8 to 24 in.
Highly Fractured	2 to 8 in.
Intensely Fractured	< 2 in.

*apparent spacing along core axis

DISCONTINUITY DATA

ANGLE: Degrees relative to plane horizontal to core axis, (-) below plane

SYMBOL: Rubble Zone, Gouge Zone, Core Loss

INFILLING

BO	Brown to Yellow-Brown Coloration
C	Calcite
CH	Chlorite
P	Pyrite
G	Gouge (Silt and/or Clay)
B	Breccia
GROUT	Grout
R-(Deg.)	Rake of slickensides, where measured
BLANK	Not measured or indeterminant
F	Faint slickensides

RQD (%) Recovery (%)

DEGREE OF WEATHERING

TERM	DESCRIPTION
Unweathered (U)	No evidence of any chemical or mechanical alteration.
Slightly Weathered (SW)	Slight discoloration on surface, slight alteration along discontinuities, less than 10 percent of the rock volume altered.
Moderately Weathered (MW)	Discoloring evident, surface pitted and altered with alteration penetrating well below rock surfaces, weathering "halos" evident, 10 to 50 percent of the rock altered.
Highly Weathered (HW)	Entire mass discolored, alteration pervading nearly all of the rock with some pockets of slightly weathered rock noticeable, some minerals leached away.
Decomposed (D)	Rock reduced to a soil with relicit rock texture, generally molded and crumbled by hand.

ABBREVIATIONS

RQD = Rock Quality Designation
JRC = Joint Roughness Coefficient
RMR = Rock Mass Rating
Q* = Modified Tunneling Quality Index
UCS = Unconfined Compressive Strength
N = Northing, E = Easting, ft = feet
deg = degrees, in. = inch
psi = pounds per square inch
R-1 = Run Number

NOTES

1. The contacts represent the approximate boundaries between lithology types, and the transition may be gradual.
2. The discussion in the text of this report is necessary for a proper understanding of the nature of the subsurface materials.
3. The locations of the discontinuties shown on the boring logs are approximate. For clarity, not all of the discontinuties are shown. Refer to the rock core photographs in Appendix B for additional information.

Howard Hanson Dam
Fish Passage Facility
Eagle Gorge, Washington

LOG OF BORING 01-DD-227

February 2004 21-1-09317-003

SHANNON & WILSON, INC.
Geotechnical and Environmental Consultants

FIG. A-8
Sheet 3 of 3

ROCK_LOG 21-09317.GPJ 21-09317.GPJ 2/4/04

LITHOLOGY DESCRIPTION

Approx. Coordinates: N: 102,564 E: 1,763,392

Depth (ft)	Lithology Description
	Basaltic Andesite: Moderate strength, dark gray, aphanitic, highly fractured, moderately to slightly weathered, abundant calcite infillings, scattered red-brown joint staining.
3.7	Andesite: Moderate strength, light gray with red-brown and dark gray inclusions/breccia fragments, moderately fractured, unweathered, scattered slickensides, scattered calcite infillings.
	- Healed brecciated texture at 8.9 feet.
10.2	- Gradational contact at 10.2 feet.
	Andesite: Moderate strength, gray, aphanitic, moderately fractured, unweathered.
	- Flow texture with imbricated breccia at 19.6 feet.
29.9	- Gradational contact at 29.9 feet.
	Andesite: Moderate strength, light gray, gravel-sized breccia fragments, highly fractured, unweathered to slightly weathered.
	- Abundant orange-brown fracture staining to 40.0 feet.
	- Highly fractured and brecciated between 48.3 and 50.8 feet.
48.0	- Gradational contact at 48.4 feet.
	Andesite (as below)

Symbol / Samples: R-1, R-2, R-4, R-5, R-6, R-7, R-8, R-9, R-10, R-11, R-12

Elev. (ft): 1160, 1150, 1140, 1130, 1120

Discontinuity Data

Infilling	Angle	Symbol
BO	15	
BO	15	
BO	25	
BO	40	
BO	20	
BO	80	
BO	80	
BO	30	
BO	80	
BO	70	
	40	
C	-50	
C	65	
C	65	
	-5	
C	-60	
BO	20	
	-40	
	-35	
	35	
C,P	5	
	-35	
C(1/4")	15	
	45	
	-50	
	-40	
BO	60	
BO	50	
	-70	
BO	-10	
	-65	
BO	55	
	1	
BO	-55	
BO	-25	
	-60	
	10	
	10	
	40	
BO	40	
BO	40	
BO	25	
BO,B	25	
BO	70	
BO	45	
BO	15	
BO	15	
BO	20	
BO	20	
BO	-40	
	-40	
BO	-35	
	35	
	-30	
	30	
	-70	
	75	
	5	
	-20	
C	20	
C	25	
C	-65	
	50	
	-50	
B,C	5	
	-65	

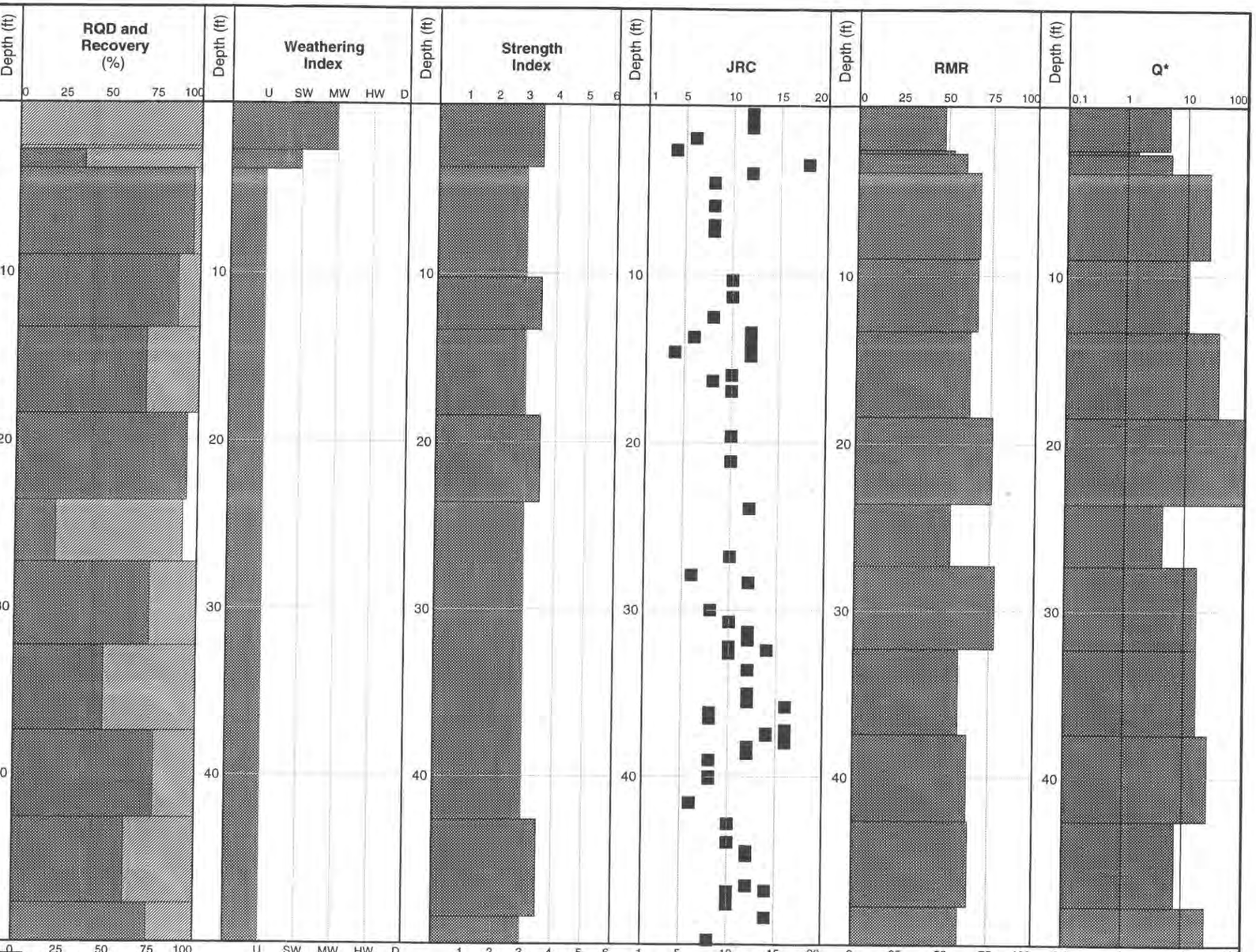

BOREHOLE DATA

Plunge = 90° Azimuth = N/A °

Total Depth = 164.5 ft.

Ground Surface Elevation = 1165.8 ft. (+/-) Depth in Rock = 164.5 ft.

STRENGTH INDEX

See Figure A-1

TERM	INDEX
Very Low	0-1.5
Low	1.5-2.5
Moderate	2.5-3.5
Medium High	3.5-4.5
High	4.5-6
Very High	>=6

DISCONTINUITY SPACING

TERM	SPACING*
Unfractured	>6 ft.
Slightly Fractured	2 to 6 ft.
Moderately Fractured	8 to 24 in.
Highly Fractured	2 to 8 in.
Intensely Fractured	< 2 in.

*apparent spacing along core axis

DISCONTINUITY DATA

ANGLE: Degrees relative to plane horizontal to core axis, (-) below plane

SYMBOL: Rubble Zone, Gouge Zone, Core Loss

INFILLING

BO	Brown to Yellow-Brown Coloration
C	Calcite
CH	Chlorite
P	Pyrite
G	Gouge (Silt and/or Clay)
B	Breccia
GROUT	Grout
R-(Deg.)	Rake of slickensides, where measured
BLANK	Not measured or indeterminant
F	Faint slickensides

DEGREE OF WEATHERING

TERM	DESCRIPTION
Unweathered (U)	No evidence of any chemical or mechanical alteration.
Slightly Weathered (SW)	Slight discoloration on surface, slight alteration along discontinuities, less than 10 percent of the rock volume altered.
Moderately Weathered (MW)	Discoloring evident, surface pitted and altered with alteration penetrating well below rock surfaces, weathering "halos" evident, 10 to 50 percent of the rock altered.
Highly Weathered (HW)	Entire mass discolored, alteration pervading nearly all of the rock with some pockets of slightly weathered rock noticeable, some minerals leached away.
Decomposed (D)	Rock reduced to a soil with relicit rock texture, generally molded and crumbled by hand.

ABBREVIATIONS

RQD = Rock Quality Designation
JRC = Joint Roughness Coefficient
RMR = Rock Mass Rating
Q* = Modified Tunneling Quality Index
UCS = Unconfined Compressive Strength
N = Northing, E = Easting, ft = feet
deg = degrees, in. = inch
psi = pounds per square inch
R-1 = Run Number

NOTES

1. The contacts represent the approximate boundaries between lithology types, and the transition may be gradual.
2. The discussion in the text of this report is necessary for a proper understanding of the nature of the subsurface materials.
3. The locations of the discontinuities shown on the boring logs are approximate. For clarity, not all of the discontinuities are shown. Refer to the rock core photographs in Appendix B for additional information.

Howard Hanson Dam
Fish Passage Facility
Eagle Gorge, Washington

LOG OF BORING 01-DD-228

February 2004 21-1-09317-003

SHANNON & WILSON, INC.
Geotechnical and Environmental Consultants

FIG. A-9
Sheet 1 of 4

ROCK_LOG 21-09317.GPJ 2/4/04

LITHOLOGY DESCRIPTION

Approx. Coordinates: N: 102,564 E: 1,763,392

Depth (ft)	Lithology Description
	Andesite: Moderate strength, light gray, highly fractured, unweathered, aphanitic, scattered slickensides and calcite along fractures.
60.4	- Gradational contact at 60.4 feet.
	Andesite: Moderate strength, gray, moderately fractured, unweathered.
63.9	Basaltic Andesite: Moderate strength, dark gray, aphanitic, moderately fractured, unweathered.
65.8	Andesite: Moderate strength, light gray, breccia texture, moderately fractured, unweathered, scattered aphanitic zones towards top, scattered slickensides, scattered calcite infilling. - Flow bedding with fractures parallel to bedding between 68.1 and 68.9 feet.
76.0	- Gradational contact at 76.0 feet.
	Andesite: Moderate strength, light gray with light colored phenochrysts, slightly fractured, unweathered. - Healed, brecciated texture between 80.4 and 82.9 feet.
84.0	- Gradational contact at 84.0 feet.
	Basaltic Andesite: Moderate strength, dark gray, aphanitic, highly fractured, unweathered, abundant partially healed fractures with calcite and chlorite infilling.

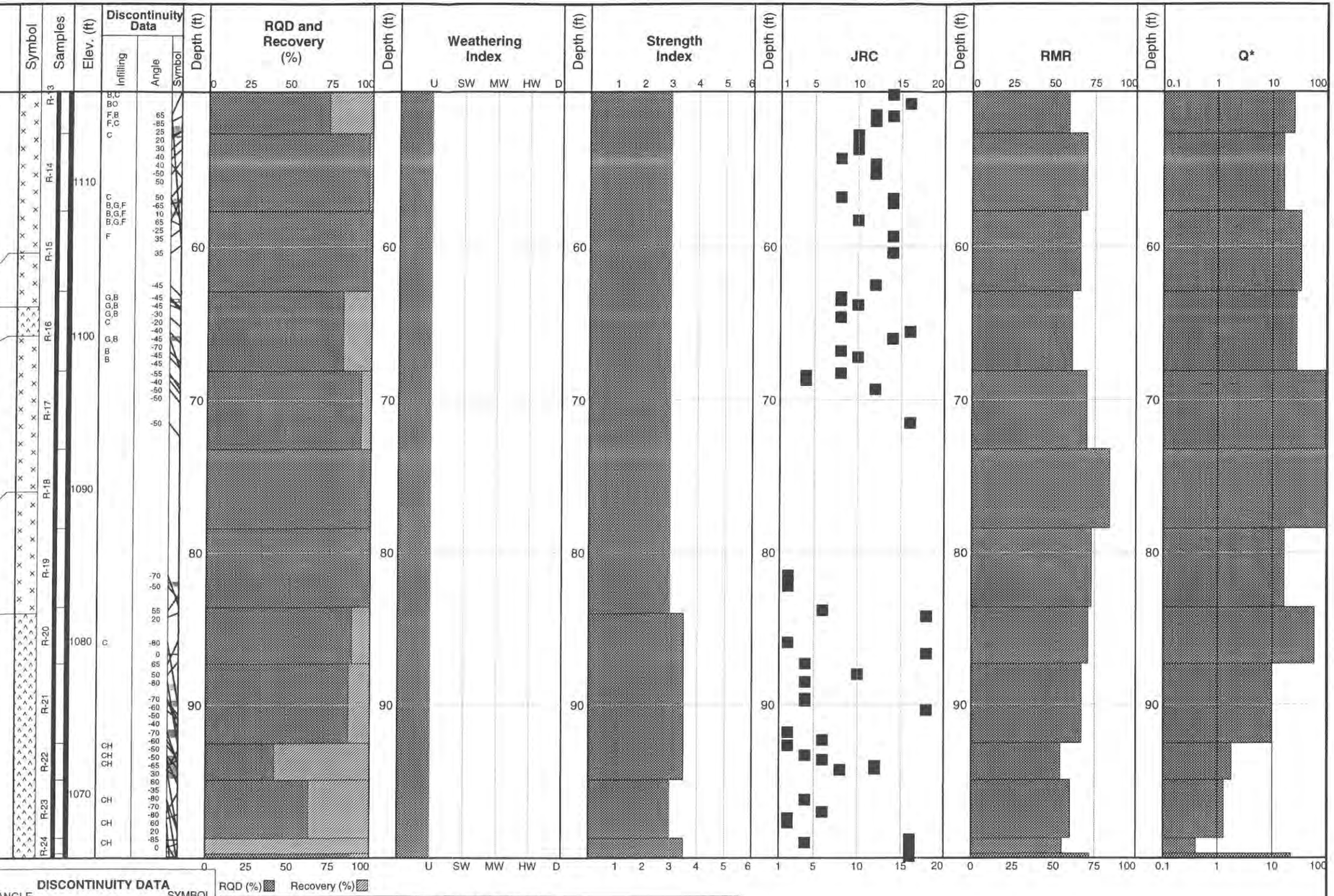

BOREHOLE DATA

Plunge = 90° Azimuth = N/A ° Total Depth = 164.5 ft.
Ground Surface Elevation = 1165.8 ft. (+/-) Depth in Rock = 164.5 ft.

STRENGTH INDEX

See Figure A-1

TERM	INDEX
Very Low	0-1.5
Low	1.5-2.5
Moderate	2.5-3.5
Medium High	3.5-4.5
High	4.5-6
Very High	>=6

DISCONTINUITY SPACING

TERM	SPACING*
Unfractured	>6 ft.
Slightly Fractured	2 to 6 ft.
Moderately Fractured	8 to 24 in.
Highly Fractured	2 to 8 in.
Intensely Fractured	< 2 in.

*apparent spacing along core axis

DISCONTINUITY DATA

ANGLE: Degrees relative to plane horizontal to core axis, (-) below plane

SYMBOL: Rubble Zone, Gouge Zone, Core Loss

INFILLING

BO	Brown to Yellow-Brown Coloration
C	Calcite
CH	Chlorite
P	Pyrite
G	Gouge (Silt and/or Clay)
B	Breccia
GROUT	Grout
R-(Deg.)	Rake of slickensides, where measured
BLANK	Not measured or indeterminant
F	Faint slickensides

DEGREE OF WEATHERING

TERM	DESCRIPTION
Unweathered (U)	No evidence of any chemical or mechanical alteration.
Slightly Weathered (SW)	Slight discoloration on surface, slight alteration along discontinuities, less than 10 percent of the rock volume altered.
Moderately Weathered (MW)	Discoloring evident, surface pitted and altered with alteration penetrating well below rock surfaces, weathering "halos" evident, 10 to 50 percent of the rock altered.
Highly Weathered (HW)	Entire mass discolored, alteration pervading nearly all of the rock with some pockets of slightly weathered rock noticeable, some minerals leached away.
Decomposed (D)	Rock reduced to a soil with relicit rock texture, generally molded and crumbled by hand.

ABBREVIATIONS

RQD = Rock Quality Designation
JRC = Joint Roughness Coefficient
RMR = Rock Mass Rating
Q* = Modified Tunneling Quality Index
UCS = Unconfined Compressive Strength
N = Northing, E = Easting, ft = feet
deg = degrees, in. = inch
psi = pounds per square inch
R-1 = Run Number

Howard Hanson Dam
Fish Passage Facility
Eagle Gorge, Washington

LOG OF BORING 01-DD-228

February 2004 21-1-09317-003

SHANNON & WILSON, INC.
Geotechnical and Environmental Consultants

FIG. A-9
Sheet 2 of 4

NOTES

1. The contacts represent the approximate boundaries between lithology types, and the transition may be gradual.
2. The discussion in the text of this report is necessary for a proper understanding of the nature of the subsurface materials.
3. The locations of the discontinuties shown on the boring logs are approximate. For clarity, not all of the discontinuties are shown. Refer to the rock core photographs in Appendix B for additional information.

ROCK_LOG 21-09317.GPJ 21-09317.GPJ 2/4/04

LITHOLOGY DESCRIPTION

Approx. Coordinates: N: 102,564 E: 1,763,392

Basaltic Andesite (cont.)

113.8 - Gradational contact at 113.8 feet.

Andesite: Moderate strength, light gray to gray, aphanitic to slightly porphyritic, moderately fractured, unweathered, abundant healed fractures with calcite and chlorite infilling, scattered slickensides.

- Abundant high-angle, healed fractures between 119.5 and 121.3 feet.
- Abundant healed fractures between 125.3 and 126.2 feet.
- Scattered 1/4-inch- to 1/8-inch-thick calcite stringers at 131.8 feet.
- Becomes more porphyritic at 141.5 feet.
- Abundant pyrite below 143.0 feet.

Samples: R-25, R-26, R-27, R-28, R-29, R-30, R-31, R-32, R-33, R-34, R-35, R-36

Elev. (ft): 1060, 1050, 1040, 1030, 1020

Discontinuity Data: Infilling: CH, CH, C, CH, CH, CH, CH, CH, C, CH, B, F,B,CH, CH,B, C, C, CH, C, F, F,G, CH,C,P, CH,C,P

Discontinuity Data: Angle: 60, 20, 0, 55, 50, 20, 10, -65, -65, 35, 15, -55, 55, 70, 50, 75, -45, 30, -70, -70, -65, 45, 30, 15, 20, -60, 0, -30, -40, -70, 30, -20, 50, 50, 30, 60, -50, 50, 50, 50, -60, 45, -65, 60, -20, -50, 20, -55, 45, -30, -70, -10, -10, -5, -60, -50, -10, -40, -20, -40, 45, -50, -45, 15, -75

Discontinuity Data: Symbol

RQD and Recovery (%): 0 25 50 75 100

Depth (ft): 110, 120, 130, 140

Weathering Index: U SW MW HW D

Strength Index: 1 2 3 4 5 6

JRC: 1 5 10 15 20

RMR: 0 25 50 75 100

Q*: 0.1 1 10 100

RQD (%) Recovery (%)

BOREHOLE DATA

Plunge = 90° Azimuth = N/A ° Total Depth = 164.5 ft.
Ground Surface Elevation = 1165.8 ft. (+/-) Depth in Rock = 164.5 ft.

STRENGTH INDEX

See Figure A-1

TERM	INDEX
Very Low	0-1.5
Low	1.5-2.5
Moderate	2.5-3.5
Medium High	3.5-4.5
High	4.5-6
Very High	>=6

DISCONTINUITY SPACING

TERM	SPACING*
Unfractured	>6 ft.
Slightly Fractured	2 to 6 ft.
Moderately Fractured	8 to 24 in.
Highly Fractured	2 to 8 in.
Intensely Fractured	< 2 in.

*apparent spacing along core axis

DISCONTINUITY DATA

ANGLE: Degrees relative to plane horizontal to core axis, (-) below plane

SYMBOL: Rubble Zone, Gouge Zone, Core Loss

INFILLING

BO	Brown to Yellow-Brown Coloration
C	Calcite
CH	Chlorite
P	Pyrite
G	Gouge (Silt and/or Clay)
B	Breccia
GROUT	Grout
R-(Deg.)	Rake of slickensides, where measured
BLANK	Not measured or indeterminant
F	Faint slickensides

DEGREE OF WEATHERING

TERM	DESCRIPTION
Unweathered (U)	No evidence of any chemical or mechanical alteration.
Slightly Weathered (SW)	Slight discoloration on surface, slight alteration along discontinuities, less than 10 percent of the rock volume altered.
Moderately Weathered (MW)	Discoloring evident, surface pitted and altered with alteration penetrating well below rock surfaces, weathering "halos" evident, 10 to 50 percent of the rock altered.
Highly Weathered (HW)	Entire mass discolored, alteration pervading nearly all of the rock with some pockets of slightly weathered rock noticeable, some minerals leached away.
Decomposed (D)	Rock reduced to a soil with relicit rock texture, generally molded and crumbled by hand.

ABBREVIATIONS

RQD = Rock Quality Designation
JRC = Joint Roughness Coefficient
RMR = Rock Mass Rating
Q* = Modified Tunneling Quality Index
UCS = Unconfined Compressive Strength
N = Northing, E = Easting, ft = feet
deg = degrees, in. = inch
psi = pounds per square inch
R-1 = Run Number

NOTES

1. The contacts represent the approximate boundaries between lithology types, and the transition may be gradual.
2. The discussion in the text of this report is necessary for a proper understanding of the nature of the subsurface materials.
3. The locations of the discontinuities shown on the boring logs are approximate. For clarity, not all of the discontinuities are shown. Refer to the rock core photographs in Appendix B for additional information.

Howard Hanson Dam
Fish Passage Facility
Eagle Gorge, Washington

LOG OF BORING 01-DD-228

February 2004 21-1-09317-003

SHANNON & WILSON, INC.
Geotechnical and Environmental Consultants

FIG. A-9
Sheet 3 of 4

ROCK_LOG 21-09317.GPJ 21-09317.GPJ 2/4/04

Depth (ft)	LITHOLOGY DESCRIPTION Approx. Coordinates: N: 102,564 E: 1,763,392	Symbol	Samples	Elev. (ft)	Discontinuity Data: Infilling	Discontinuity Data: Angle	Discontinuity Data: Symbol
	Andesite (cont.)		R-37	1010			
156.0	- Gradational contact at 156.0 feet.						
	Andesite: Moderate strength, light gray with 30 percent medium sand-sized white inclusions, slightly fractured, unweathered.		R-38			50 -30	
			R-39		BO	-55	
164.5	BOTTOM OF BORING AT 164.5 FEET COMPLETED 8/13/2001			1000 990 980 970			

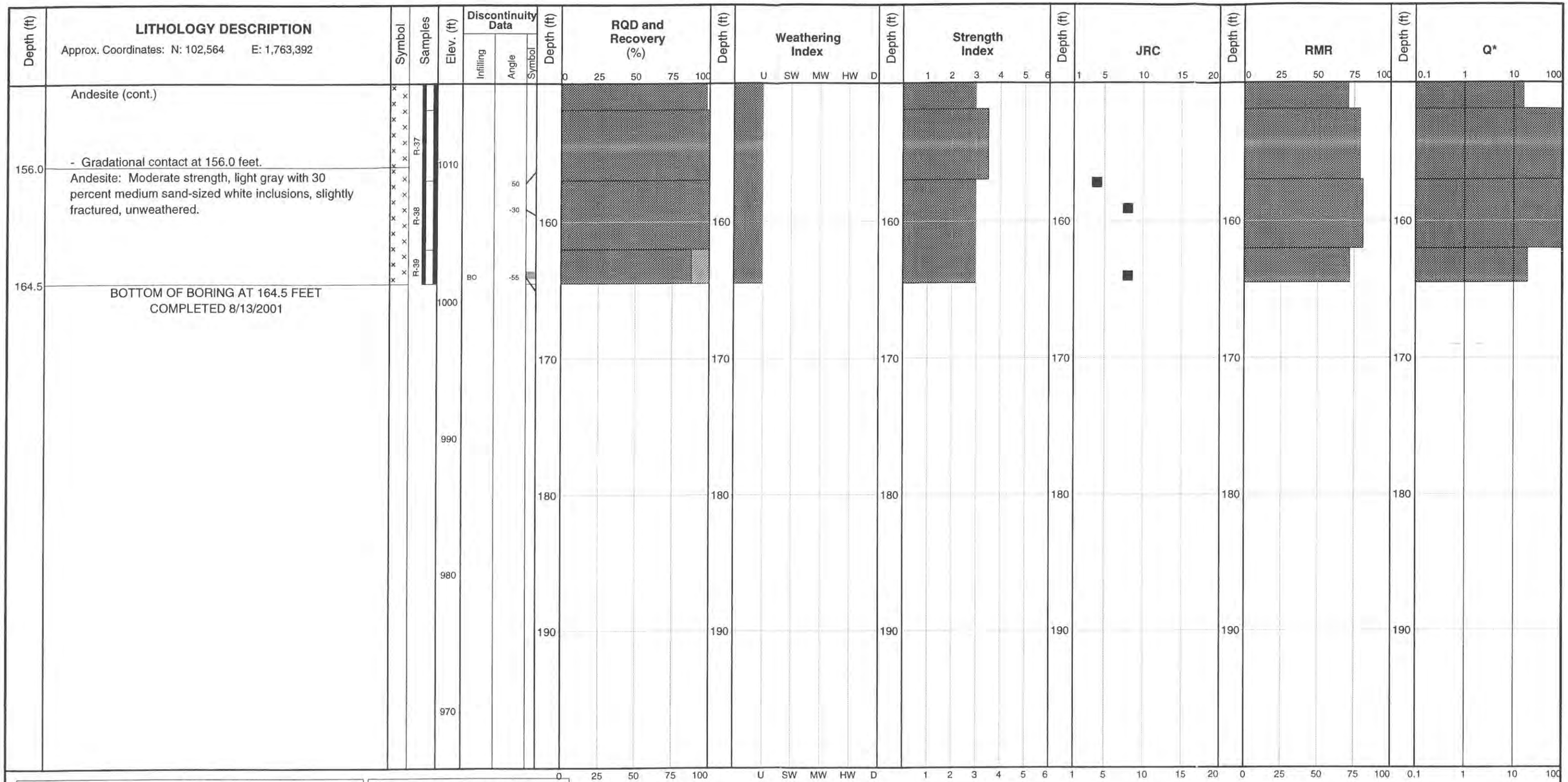

BOREHOLE DATA

Plunge = 90° Azimuth = N/A ° Total Depth = 164.5 ft.
Ground Surface Elevation = 1165.8 ft. (+/-) Depth in Rock = 164.5 ft.

STRENGTH INDEX

See Figure A-1

TERM	INDEX
Very Low	0-1.5
Low	1.5-2.5
Moderate	2.5-3.5
Medium High	3.5-4.5
High	4.5-6
Very High	>=6

DISCONTINUITY SPACING

TERM	SPACING*
Unfractured	>6 ft.
Slightly Fractured	2 to 6 ft.
Moderately Fractured	8 to 24 in.
Highly Fractured	2 to 8 in.
Intensely Fractured	< 2 in.

*apparent spacing along core axis

DISCONTINUITY DATA

ANGLE: Degrees relative to plane horizontal to core axis, (-) below plane

SYMBOL: Rubble Zone, Gouge Zone, Core Loss

INFILLING

BO	Brown to Yellow-Brown Coloration
C	Calcite
CH	Chlorite
P	Pyrite
G	Gouge (Silt and/or Clay)
B	Breccia
GROUT	Grout
R-(Deg.)	Rake of slickensides, where measured
BLANK	Not measured or indeterminant
F	Faint slickensides

RQD (%) Recovery (%)

DEGREE OF WEATHERING

TERM	DESCRIPTION
Unweathered (U)	No evidence of any chemical or mechanical alteration.
Slightly Weathered (SW)	Slight discoloration on surface, slight alteration along discontinuities, less than 10 percent of the rock volume altered.
Moderately Weathered (MW)	Discoloring evident, surface pitted and altered with alteration penetrating well below rock surfaces, weathering "halos" evident, 10 to 50 percent of the rock altered.
Highly Weathered (HW)	Entire mass discolored, alteration pervading nearly all of the rock with some pockets of slightly weathered rock noticeable, some minerals leached away.
Decomposed (D)	Rock reduced to a soil with relicit rock texture, generally molded and crumbled by hand.

ABBREVIATIONS

RQD = Rock Quality Designation
JRC = Joint Roughness Coefficient
RMR = Rock Mass Rating
Q* = Modified Tunneling Quality Index
UCS = Unconfined Compressive Strength
N = Northing, E = Easting, ft = feet
deg = degrees, in. = inch
psi = pounds per square inch
R-1 = Run Number

NOTES

1. The contacts represent the approximate boundaries between lithology types, and the transition may be gradual.
2. The discussion in the text of this report is necessary for a proper understanding of the nature of the subsurface materials.
3. The locations of the discontinuties shown on the boring logs are approximate. For clarity, not all of the discontinuties are shown. Refer to the rock core photographs in Appendix B for additional information.

Howard Hanson Dam
Fish Passage Facility
Eagle Gorge, Washington

LOG OF BORING 01-DD-228

February 2004 21-1-09317-003

SHANNON & WILSON, INC.
Geotechnical and Environmental Consultants

FIG. A-9
Sheet 4 of 4

ROCK_LOG 21-09317.GPJ 21-09317.GPJ 2/4/04

LITHOLOGY DESCRIPTION

Approx. Coordinates: N: 102,443 E: 1,763,490

Depth (ft)	Description
1.5	Brown, slightly silty, sandy GRAVEL; moist; scattered cobbles; (Road Fill) GW-GM.
	Andesite: Moderate strength, dark gray ground mass with red-brown and green-gray gravel-sized breccia fragments, moderately fractured, unweathered to slightly weathered, abundant calcite infillings.
8.5	Andesite: Moderate strength, gray, porphyritic.
10.0	Andesite: Moderate strength, dark gray ground mass, moderately fractured, unweathered, scattered calcite infilling.
15.1	Andesite: Moderate strength, gray, highly fractured, unweathered, aphanitic, abundant pyrite and calcite infillings.
	- Flow texture with scattered brecciated texture from 21.7 to 23.2 feet.
23.2	Andesite: Moderate strength, gray, sand-size breccia fragments, moderately fractured, unweathered, abundant calcite infilling.
	- Pyroclastic texture between 26.0 and 26.6 feet.
	- 1-inch-thick dike of pebble-size breccia cross-cut by slickensided fracture with negligible offset at 27.2 feet.
38.3	Basaltic Andesite: Moderate strength, dark gray to green-gray, moderately fractured, unweathered.
43.3	Andesite Pyroclastite: Moderate to low strength, light gray, moderately fractured, unweathered, scattered calcite infilling.

Symbol; Samples: R-1, R-2, R-3, R-4, R-5, R-6, R-7, R-8, R-9, R-10, R-11, R-12, R-13, R-14

Elev. (ft): 1140, 1130, 1120, 1110

Discontinuity Data: Infilling; Angle; Symbol

RQD and Recovery (%): 0 25 50 75 100

Weathering Index: U SW MW HW D

Strength Index: 1 2 3 4 5 6

JRC: 1 5 10 15 20

RMR: 0 25 50 75 100

Q*: 0.1 1 10 100

RQD (%) Recovery (%)

BOREHOLE DATA

Plunge = 50° Azimuth = 25 ° Total Depth = 55.3 ft.
Ground Surface Elevation = 1140.6 ft. (+/-) Depth in Rock = 53.8 ft.

STRENGTH INDEX

See Figure A-1

TERM	INDEX
Very Low	0-1.5
Low	1.5-2.5
Moderate	2.5-3.5
Medium High	3.5-4.5
High	4.5-6
Very High	>=6

DISCONTINUITY SPACING

TERM	SPACING*
Unfractured	>6 ft.
Slightly Fractured	2 to 6 ft.
Moderately Fractured	8 to 24 in.
Highly Fractured	2 to 8 in.
Intensely Fractured	< 2 in.

*apparent spacing along core axis

DISCONTINUITY DATA

ANGLE: Degrees relative to plane horizontal to core axis, (-) below plane

SYMBOL: Rubble Zone, Gouge Zone, Core Loss

INFILLING

BO	Brown to Yellow-Brown Coloration
C	Calcite
CH	Chlorite
P	Pyrite
G	Gouge (Silt and/or Clay)
B	Breccia
GROUT	Grout
R-(Deg.)	Rake of slickensides, where measured
BLANK	Not measured or indeterminant
F	Faint slickensides

DEGREE OF WEATHERING

TERM	DESCRIPTION
Unweathered (U)	No evidence of any chemical or mechanical alteration.
Slightly Weathered (SW)	Slight discoloration on surface, slight alteration along discontinuities, less than 10 percent of the rock volume altered.
Moderately Weathered (MW)	Discoloring evident, surface pitted and altered with alteration penetrating well below rock surfaces, weathering "halos" evident, 10 to 50 percent of the rock altered.
Highly Weathered (HW)	Entire mass discolored, alteration pervading nearly all of the rock with some pockets of slightly weathered rock noticeable, some minerals leached away.
Decomposed (D)	Rock reduced to a soil with relicit rock texture, generally molded and crumbled by hand.

ABBREVIATIONS

RQD = Rock Quality Designation
JRC = Joint Roughness Coefficient
RMR = Rock Mass Rating
Q* = Modified Tunneling Quality Index
UCS = Unconfined Compressive Strength
N = Northing, E = Easting, ft = feet
deg = degrees, in. = inch
psi = pounds per square inch
R-1 = Run Number

NOTES

1. The contacts represent the approximate boundaries between lithology types, and the transition may be gradual.
2. The discussion in the text of this report is necessary for a proper understanding of the nature of the subsurface materials.
3. The locations of the discontinuties shown on the boring logs are approximate. For clarity, not all of the discontinuities are shown. Refer to the rock core photographs in Appendix B for additional information.

Howard Hanson Dam
Fish Passage Facility
Eagle Gorge, Washington

LOG OF BORING 01-DD-229

February 2004 21-1-09317-003

SHANNON & WILSON, INC.
Geotechnical and Environmental Consultants

FIG. A-10
Sheet 1 of 2

ROCK_LOG 21-09317.GPJ 21-09317.GPJ 2/4/04

Depth (ft)	LITHOLOGY DESCRIPTION Approx. Coordinates: N: 102,443 E: 1,763,490	Symbol	Samples	Elev. (ft)	Discontinuity Data: Infilling	Discontinuity Data: Angle	Discontinuity Data: Symbol
	Andesite Pyroclastite (cont.)		R-15	1100	C,P BO	55 50 -60 50 -40 30 20 30 -50 30 20	
55.2							
55.3	Grout: Tan, homogeneous. BOTTOM OF BORING AT 55.3 FEET COMPLETED 8/15/2001						
	NOTE: Hole 01-DD-229 was terminated due to existing grout/anchor encountered at 55.2 feet. Moved 1 foot west and 0.5 feet north and redrilled at 01-DD-230.			1090			
				1080			
				1070			

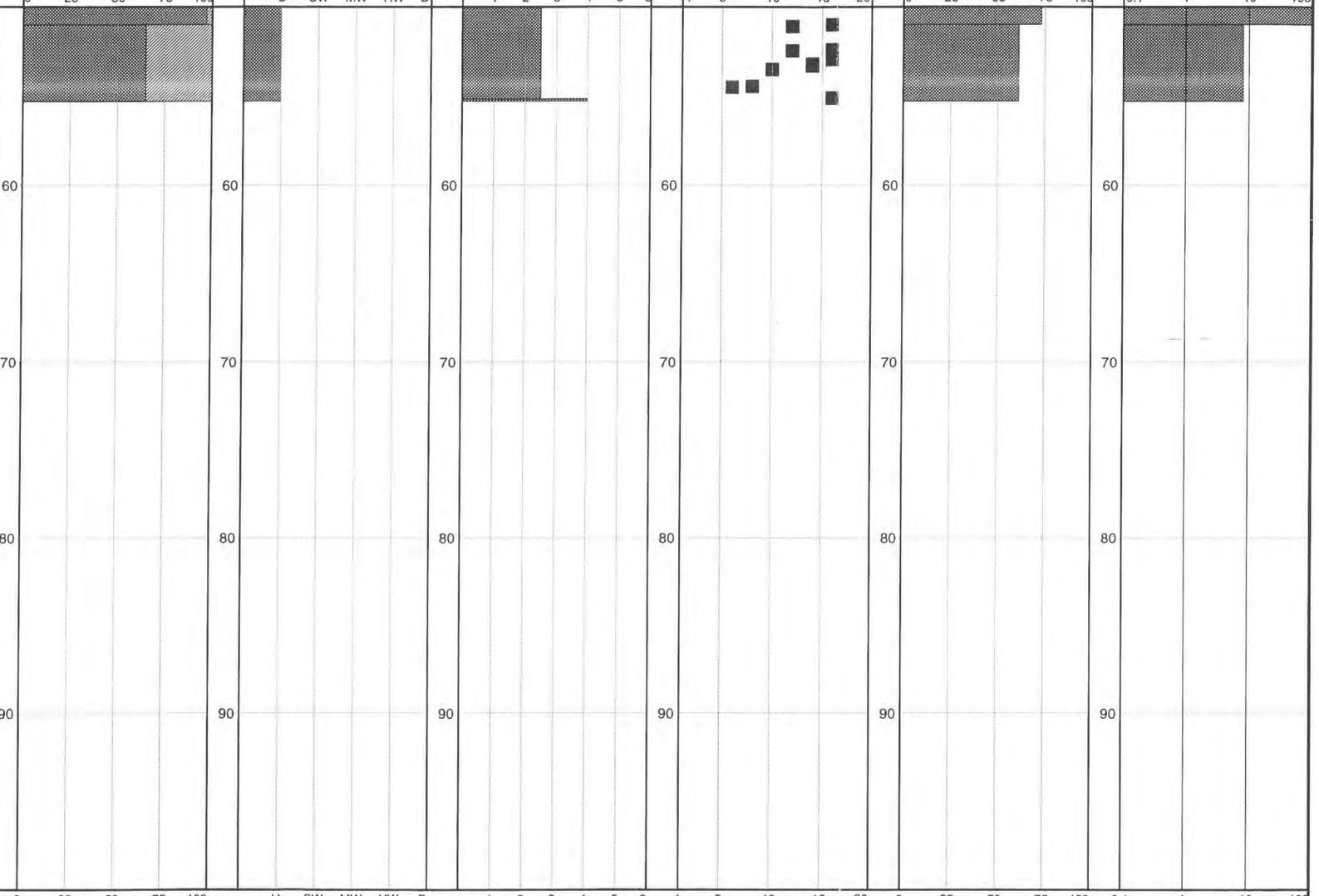

RQD (%) ▩ Recovery (%) ▨

BOREHOLE DATA

Plunge = 50° Azimuth = 25 ° Total Depth = 55.3 ft.
Ground Surface Elevation = 1140.6 ft. (+/-) Depth in Rock = 53.8 ft.

STRENGTH INDEX

See Figure A-1

TERM	INDEX
Very Low	0-1.5
Low	1.5-2.5
Moderate	2.5-3.5
Medium High	3.5-4.5
High	4.5-6
Very High	>=6

DISCONTINUITY SPACING

TERM	SPACING*
Unfractured	>6 ft.
Slightly Fractured	2 to 6 ft.
Moderately Fractured	8 to 24 in.
Highly Fractured	2 to 8 in.
Intensely Fractured	< 2 in.

*apparent spacing along core axis

DISCONTINUITY DATA

ANGLE: Degrees relative to plane horizontal to core axis, (-) below plane

SYMBOL: Rubble Zone, Gouge Zone, Core Loss

INFILLING

BO	Brown to Yellow-Brown Coloration
C	Calcite
CH	Chlorite
P	Pyrite
G	Gouge (Silt and/or Clay)
B	Breccia
GROUT	Grout
R-(Deg.)	Rake of slickensides, where measured
BLANK	Not measured or indeterminant
F	Faint slickensides

DEGREE OF WEATHERING

TERM	DESCRIPTION
Unweathered (U)	No evidence of any chemical or mechanical alteration.
Slightly Weathered (SW)	Slight discoloration on surface, slight alteration along discontinuities, less than 10 percent of the rock volume altered.
Moderately Weathered (MW)	Discoloring evident, surface pitted and altered with alteration penetrating well below rock surfaces, weathering "halos" evident, 10 to 50 percent of the rock altered.
Highly Weathered (HW)	Entire mass discolored, alteration pervading nearly all of the rock with some pockets of slightly weathered rock noticeable, some minerals leached away.
Decomposed (D)	Rock reduced to a soil with relicit rock texture, generally molded and crumbled by hand.

ABBREVIATIONS

RQD = Rock Quality Designation
JRC = Joint Roughness Coefficient
RMR = Rock Mass Raiing
Q* = Modified Tunneling Quality Index
UCS = Unconfined Compressive Strength
N = Northing, E = Easting, ft = feet
deg = degrees, in. = inch
psi = pounds per square inch
R-1 = Run Number

NOTES

1. The contacts represent the approximate boundaries between lithology types, and the transition may be gradual.
2. The discussion in the text of this report is necessary for a proper understanding of the nature of the subsurface materials.
3. The locations of the discontinuties shown on the boring logs are approximate. For clarity, not all of the discontinuties are shown. Refer to the rock core photographs in Appendix B for additional information.

Howard Hanson Dam
Fish Passage Facility
Eagle Gorge, Washington

LOG OF BORING 01-DD-229

February 2004 21-1-09317-003

SHANNON & WILSON, INC.
Geotechnical and Environmental Consultants

FIG. A-10
Sheet 2 of 2

ROCK_LOG 21-09317.GPJ 21-09317.GPJ 2/4/04

LITHOLOGY DESCRIPTION

Approx. Coordinates: N: 102,442 E: 1,763,490

Depth (ft)	Lithology
	Andesite: Moderate strength, dark gray, medium to coarse sand-sized breccia fragments, moderately fractured, unweathered, scattered pyroclastic zones (<1.0 foot thick), scattered brown coloration on fractures, scattered calcite infilling.
15.6	Andesite: Moderate strength, gray, moderately to highly fractured, unweathered, aphanitic, abundant pyrite and calcite infillings.
24.6	Andesite: Moderate strength, light gray, matrix-supported breccia texture, moderately fractured, unweathered. - Rock bolt grout from 26.9 to 27.1 feet.
35.8	- Sharp contact at 35.8 feet.
37.1	Andesite: Moderate strength, gray to purple, fine to medium sand-size inclusions/crystals.
	Andesite: Moderate to low strength, gray, slightly fractured, unweathered, scattered pyroclastic zones, scattered soft gouge zones.
41.9	- Gouge from 37.1 to 37.8 feet.
	Andesite: Moderate strength, gray, highly fractured, unweathered, aphanitic, abundant calcite stringers.
45.8	Andesite: Moderate strength, gray, moderately fractured, unweathered, scattered slickensides, scattered calcite infilling.

Symbol: R-1, R-2, R-3, R-4, R-5, R-6, R-7, R-8, R-9, R-10, R-11, R-12

Samples: R-1, R-2, R-3, R-4, R-5, R-6, R-7, R-8, R-9, R-10, R-11, R-12

Elev. (ft): 1140, 1130, 1120, 1110

Discontinuity Data

Infilling	Angle	Symbol
C	65	
	CL	
C	-40	
	30	
BO	-35	
BO	30	
	55	
C	55	
C	50	
C	55	
C	-30	
	35	
R-0	70	
BO	-60	
C	15	
	60	
	60	
	25	
	10	
	-25	
C	45	
C	30	
G,B	50	
G,B	55	
C	-25	
C	20	
	35	
	30	
	50	
	30	
	45	
	65	
	50	
	75	
P,C	65	
	65	
	55	
BO	60	
	-65	
	40	
C	20	
C	30	
	55	
	50	
C	20	
C	-15	
C	5	
C	0	
	35	
C	60	
C	-50	
C(1/4")	20	
C	-35	
C,P	40	
G,B,C	50	
G,B,C	50	
	-60	
	30	
	75	
G,B	65	
B	35	

RQD and Recovery (%): 0 25 50 75 100

Weathering Index: U SW MW HW D

Strength Index: 1 2 3 4 5 6

JRC: 1 5 10 15 20

RMR: 0 25 50 75 100

Q*: 0.1 1 10 100

RQD (%) Recovery (%)

BOREHOLE DATA

Plunge = 45° Azimuth = 15 ° Total Depth = 109.9 ft.
Ground Surface Elevation = 1140.7 ft. (+/-) Depth in Rock = 109.9 ft.

STRENGTH INDEX

See Figure A-1

TERM	INDEX
Very Low	0-1.5
Low	1.5-2.5
Moderate	2.5-3.5
Medium High	3.5-4.5
High	4.5-6
Very High	>=6

DISCONTINUITY SPACING

TERM	SPACING*
Unfractured	>6 ft.
Slightly Fractured	2 to 6 ft.
Moderately Fractured	8 to 24 in.
Highly Fractured	2 to 8 in.
Intensely Fractured	< 2 in.

*apparent spacing along core axis

DISCONTINUITY DATA

ANGLE: Degrees relative to plane horizontal to core axis, (-) below plane

SYMBOL: Rubble Zone, Gouge Zone, Core Loss

INFILLING

BO	Brown to Yellow-Brown Coloration
C	Calcite
CH	Chlorite
P	Pyrite
G	Gouge (Silt and/or Clay)
B	Breccia
GROUT	Grout
R-(Deg.)	Rake of slickensides, where measured
BLANK	Not measured or indeterminant
F	Faint slickensides

DEGREE OF WEATHERING

TERM	DESCRIPTION
Unweathered (U)	No evidence of any chemical or mechanical alteration.
Slightly Weathered (SW)	Slight discoloration on surface, slight alteration along discontinuities, less than 10 percent of the rock volume altered.
Moderately Weathered (MW)	Discoloring evident, surface pitted and altered with alteration penetrating well below rock surfaces, weathering "halos" evident, 10 to 50 percent of the rock altered.
Highly Weathered (HW)	Entire mass discolored, alteration pervading nearly all of the rock with some pockets of slightly weathered rock noticeable, some minerals leached away.
Decomposed (D)	Rock reduced to a soil with relicit rock texture, generally molded and crumbled by hand.

ABBREVIATIONS

RQD = Rock Quality Designation
JRC = Joint Roughness Coefficient
RMR = Rock Mass Rating
Q* = Modified Tunneling Quality Index
UCS = Unconfined Compressive Strength
N = Northing, E = Easting, ft = feet
deg = degrees, in. = inch
psi = pounds per square inch
R-1 = Run Number

NOTES

1. The contacts represent the approximate boundaries between lithology types, and the transition may be gradual.
2. The discussion in the text of this report is necessary for a proper understanding of the nature of the subsurface materials.
3. The locations of the discontinuties shown on the boring logs are approximate. For clarity, not all of the discontinuties are shown. Refer to the rock core photographs in Appendix B for additional information.

Howard Hanson Dam
Fish Passage Facility
Eagle Gorge, Washington

LOG OF BORING 01-DD-230

February 2004 21-1-09317-003

SHANNON & WILSON, INC.
Geotechnical and Environmental Consultants

FIG. A-11
Sheet 1 of 3

ROCK_LOG 21-09317.GPJ 21-09317.GPJ 2/4/04

Depth (ft)	LITHOLOGY DESCRIPTION Approx. Coordinates: N: 102,442 E: 1,763,490	Symbol	Samples	Elev. (ft)
	Andesite (cont.) - Aphanitic zone from 49.2 to 50.4 feet.		R-13, R-14	1100
61.6	Basaltic Andesite: Moderate strength, dark gray with 30 percent white inclusions, moderately fractured, unweathered, abundant pyrite and calcite infilling.		R-15	
66.0	Andesite: Moderate strength, gray, moderately fractured, unweathered, scattered to abundant slickensides, scattered calcite and pyrite infilling.		R-16, R-17	1090
82.6	- Gradational contact at 82.6 feet. Basaltic Andesite: Moderate strength, dark gray, aphanitic, highly fractured, unweathered, abundant chlorite, calcite, and pyrite infillings, scattered slickensides.		R-18, R-19, R-20, R-21, R-22, R-23	1080

Discontinuity Data: Infilling, Angle, Symbol

RQD and Recovery (%): 0 25 50 75 100

Weathering Index: U SW MW HW D

Strength Index: 1 2 3 4 5 6

JRC: 1 5 10 15 20

RMR: 0 25 50 75 100

Q*: 0.1 1 10 100

Depth (ft): 60, 70, 80, 90

RQD (%) Recovery (%)

BOREHOLE DATA

Plunge = 45° Azimuth = 15 ° Total Depth = 109.9 ft.
Ground Surface Elevation = 1140.7 ft. (+/-) Depth in Rock = 109.9 ft.

STRENGTH INDEX

See Figure A-1

TERM	INDEX
Very Low	0-1.5
Low	1.5-2.5
Moderate	2.5-3.5
Medium High	3.5-4.5
High	4.5-6
Very High	>=6

DISCONTINUITY SPACING

TERM	SPACING*
Unfractured	>6 ft.
Slightly Fractured	2 to 6 ft.
Moderately Fractured	8 to 24 in.
Highly Fractured	2 to 8 in.
Intensely Fractured	< 2 in.

*apparent spacing along core axis

DISCONTINUITY DATA

ANGLE: Degrees relative to plane horizontal to core axis, (-) below plane

SYMBOL: Rubble Zone, Gouge Zone, Core Loss

INFILLING

BO	Brown to Yellow-Brown Coloration
C	Calcite
CH	Chlorite
P	Pyrite
G	Gouge (Silt and/or Clay)
B	Breccia
GROUT	Grout
R-(Deg.)	Rake of slickensides, where measured
BLANK	Not measured or indeterminant
F	Faint slickensides

DEGREE OF WEATHERING

TERM	DESCRIPTION
Unweathered (U)	No evidence of any chemical or mechanical alteration.
Slightly Weathered (SW)	Slight discoloration on surface, slight alteration along discontinuities, less than 10 percent of the rock volume altered.
Moderately Weathered (MW)	Discoloring evident, surface pitted and altered with alteration penetrating well below rock surfaces, weathering "halos" evident, 10 to 50 percent of the rock altered.
Highly Weathered (HW)	Entire mass discolored, alteration pervading nearly all of the rock with some pockets of slightly weathered rock noticeable, some minerals leached away.
Decomposed (D)	Rock reduced to a soil with relicit rock texture, generally molded and crumbled by hand.

ABBREVIATIONS

RQD = Rock Quality Designation
JRC = Joint Roughness Coefficient
RMR = Rock Mass Rating
Q* = Modified Tunneling Quality Index
UCS = Unconfined Compressive Strength
N = Northing, E = Easting, ft = feet
deg = degrees, in. = inch
psi = pounds per square inch
R-1 = Run Number

NOTES

1. The contacts represent the approximate boundaries between lithology types, and the transition may be gradual.
2. The discussion in the text of this report is necessary for a proper understanding of the nature of the subsurface materials.
3. The locations of the discontinuties shown on the boring logs are approximate. For clarity, not all of the discontinuties are shown. Refer to the rock core photographs in Appendix B for additional information.

Howard Hanson Dam
Fish Passage Facility
Eagle Gorge, Washington

LOG OF BORING 01-DD-230

February 2004 21-1-09317-003

SHANNON & WILSON, INC.
Geotechnical and Environmental Consultants

FIG. A-11
Sheet 2 of 3

ROCK_LOG 21-09317.GPJ 21-09317.GPJ 2/4/04

LITHOLOGY DESCRIPTION

Approx. Coordinates: N: 102,442 E: 1,763,490

Basaltic Andesite (cont.)

109.9 BOTTOM OF BORING AT 109.9 FEET
COMPLETED 8/16/2001

Samples: R-24, R-25, R-26

Elev. (ft): 1060, 1050, 1040

Discontinuity Data		
Infilling	Angle	Symbol
CH	25	
CH	-45	
CH	40	
CH	40	
CH	10	
CH	-45	
CH	60	
CH,P	-35	
CH,P	-50	
CH	-30	
CH,P	-50	
CH,P	30	
CH,P	-50	
C,CH	-40	
	-20	
CH	15	
	35	
CH	-25	
BO	-20	
	-70	
	-65	
	-30	
	-35	
	45	
	10	
	-50	
	-40	
	50	
	-40	
	75	
	-45	
	-20	
	-20	
	40	
	40	
	10	

Depth (ft): 110, 120, 130, 140

RQD and Recovery (%): 0 25 50 75 100

Weathering Index: U SW MW HW D

Strength Index: 1 2 3 4 5 6

JRC: 1 5 10 15 20

RMR: 0 25 50 75 100

Q*: 0.1 1 10 100

BOREHOLE DATA

Plunge = 45° Azimuth = 15 ° Total Depth = 109.9 ft.
Ground Surface Elevation = 1140.7 ft. (+/-) Depth in Rock = 109.9 ft.

STRENGTH INDEX

See Figure A-1

TERM	INDEX
Very Low	0-1.5
Low	1.5-2.5
Moderate	2.5-3.5
Medium High	3.5-4.5
High	4.5-6
Very High	>=6

DISCONTINUITY SPACING

TERM	SPACING*
Unfractured	>6 ft.
Slightly Fractured	2 to 6 ft.
Moderately Fractured	8 to 24 in.
Highly Fractured	2 to 8 in.
Intensely Fractured	< 2 in.

*apparent spacing along core axis

DISCONTINUITY DATA

ANGLE: Degrees relative to plane horizontal to core axis, (-) below plane

SYMBOL: Rubble Zone, Gouge Zone, Core Loss

INFILLING

BO	Brown to Yellow-Brown Coloration
C	Calcite
CH	Chlorite
P	Pyrite
G	Gouge (Silt and/or Clay)
B	Breccia
GROUT	Grout
R-(Deg.)	Rake of slickensides, where measured
BLANK	Not measured or indeterminant
F	Faint slickensides

RQD (%) Recovery (%)

DEGREE OF WEATHERING

TERM	DESCRIPTION
Unweathered (U)	No evidence of any chemical or mechanical alteration.
Slightly Weathered (SW)	Slight discoloration on surface, slight alteration along discontinuities, less than 10 percent of the rock volume altered.
Moderately Weathered (MW)	Discoloring evident, surface pitted and altered with alteration penetrating well below rock surfaces, weathering "halos" evident, 10 to 50 percent of the rock altered.
Highly Weathered (HW)	Entire mass discolored, alteration pervading nearly all of the rock with some pockets of slightly weathered rock noticeable, some minerals leached away.
Decomposed (D)	Rock reduced to a soil with relicit rock texture, generally molded and crumbled by hand.

ABBREVIATIONS

RQD = Rock Quality Designation
JRC = Joint Roughness Coefficient
RMR = Rock Mass Rating
Q* = Modified Tunneling Quality Index
UCS = Unconfined Compressive Strength
N = Northing, E = Easting, ft = feet
deg = degrees, in. = inch
psi = pounds per square inch
R-1 = Run Number

NOTES

1. The contacts represent the approximate boundaries between lithology types, and the transition may be gradual.
2. The discussion in the text of this report is necessary for a proper understanding of the nature of the subsurface materials.
3. The locations of the discontinuties shown on the boring logs are approximate. For clarity, not all of the discontinuties are shown. Refer to the rock core photographs in Appendix B for additional information.

Howard Hanson Dam
Fish Passage Facility
Eagle Gorge, Washington

LOG OF BORING 01-DD-230

February 2004 21-1-09317-003

SHANNON & WILSON, INC.
Geotechnical and Environmental Consultants

FIG. A-11
Sheet 3 of 3

ROCK_LOG 21-09317.GPJ 21-09317.GPJ 2/4/04

RECORD OF DRILLHOLE

(03-DD-231)

SHEET 1 OF 11

BORING NO. IN0600
PROJECT: H.H. Dam Fish Bypass
PROJECT NO.: 21-1-09880-001
LOCATION: N=102453 E=1763478

- DRILLING DATE: 4/10/03
DRILLING CO.: CRUX
DRILL RIG:
DRILL METHOD: HQ-3

DATUM: NAD88
COLLAR ELEV.: 1150.79
INCLINATION: 87
AZIMUTH: 202

J - Joint, F - Fault, S - Shear, B - Bedding, F - Foliation
Description: SM - Smooth, R - Rough, SL - Slickensided
Profile: ST - Stepped, U - Undulating, P - Planar

DEPTH SCALE (FEET)	DESCRIPTION	GRAPHIC LOG	RUN NO.	CORE RECOVERY (%)	RQD (%)	FRACTURES PER FOOT	DISCONTINUITY DATA: TYPE AND SURFACE DESCRIPTION	JRC	GRAPHIC LOG	WEATHERING INDEX	STRENGTH INDEX	NOTES, WATER LEVELS, INSTRUMENTATION DRILLING FLUID	DEPTH SCALE (ELEV.)
0	BEGIN DRILLING @ 0815 Rock @ SURFACE												
0	Andesite Breccia / Pyroclastic Dark gray to gray grand Mags w/ lt. gry Plenochrysts, red-brown breccia frags	CL	1	0/1.2	0/1.2	N/A				N/A	N/A	CORE LOSS AT SURFACE - Rubble recovery Was lost in hole	
1	Brown staining on joint surfaces to 2 feet. 1.2	CL										Blocked off @ 1.2	
2			2			>0	Rubble w/ Brn ox on some Faces from 1.2-1.7'		XX XX XXXX XXXX	Mod. Weathered		CORE LOSS from 1.2-2.4 Adv. Rubble @ Top of Run 2	
3				3.6/3.6	1.8/3.6	2	Rubble w/ Brn ox Brn Ox. Faces f/ Run 2.4-2.9	R,U 12	30		R-2.0	→ Easily Scratched/ Peeled w/ Knife	
								2,U 12	75				
4						1	11	R,U 14	30				
								12					
5	Increasing Pyroclastic Texture + softer 4.8		3			0	Brn ox	F,U 14					
6				2.7/2.7	2.4/2.7	1	w/ lt. Brn ox	U,R 10	10	Sl. WEATH.	R-1.5		
7						3	11	U,R 14	60				
							11	U,R 16	70				
							11	U,R 16	60				
8	SHARP @ Run — 7.5 Aud. Breccia: F-gr-size clasts in gry matrix.		4			>1	W/ Brn ox	U,R 14	XXXX XXXX 75				
9				2.3/2.3	1.6/2.3	1	Brn ox	U,SM 8	25	U	R-2.5		
							Brn ox	U,R 10	65				
10	9.8		5			1							
								U,SL 8	40		R-2.5		
11				5.0/5.0	4.5/5.0	3	Brn ox	U,R 12	40				
								P,R 6	10	U			
12						1					R-3.0		
							CaCO3	U,R 8	40				
13						1	Brn ox	P,R 6	15				
	13.6 Gradational Contact. Basaltic Andesite: Dk. Gray												
14						3	w/ chlorite	U,R 12	60				
							11	P,R 4	50				

DEPTH SCALE: 1"=2'
LOGGED BY: UZW
DRILLER: Buck
DATE: 4/10/03

SHANNON & WILSON, INC.

RECORD OF DRILLHOLE

SHEET 2 OF 11

BORING NO. 03-DD-231
PROJECT: H.H. Dam
PROJECT NO.: 21-1-09880-001
LOCATION:

DRILLING DATE: 4/10/03
DRILLING CO.: CRUX
DRILL RIG:
DRILL METHOD: HQ-3

DATUM: NAVD88
COLLAR ELEV.: 1150.79
INCLINATION: 87
AZIMUTH: 202

J - Joint, F - Fault, S - Shear, B - Bedding, F - Foliation
Description: SM - Smooth, R - Rough, SL - Slickensided
Profile: ST - Stepped, U - Undulating, P - Planar

DEPTH SCALE (FEET)	ROCK TYPE: DESCRIPTION	GRAPHIC LOG	RUN NO.	CORE RECOVERY (%)	RQD (%)	FRACTURES PER FOOT	DISCONTINUITY DATA: TYPE AND SURFACE DESCRIPTION	JRC	GRAPHIC LOG	WEATHERING INDEX	STRENGTH INDEX	NOTES, WATER LEVELS, INSTRUMENTATION DRILLING FLUID	DEPTH SCALE (ELEV.)
14	Basaltic Andesite (Cont)		5 (CONT)				w/chlorite P,R	6					
						1	U,R	10	50				
15	14.8' >		6										
						1	w/faint Slicks + Chlorite U,Sm	8	70				
16							w/Brn ox P,R	8	40				
				5.0/5.0	4.5/5.0	3	w/Brn ox P,R	6	65				
17	16.8' - Increasing Phenocrysts (lt. gry)						w/Brn ox U,R	12	40	U	R-3.0		
						0							
18													
	18.6' Gradational Porph. Andesite gray, red-brown, + green-gray pockets (~10-15% pheno.)					1	w/CaCO3 St,R	16	50				
19							w/Breccia U,SL	12	65				
						1							
20	19.8' >		7				MB Rubble From Air Hammer →					STOP FOR OVER-REAMING TO 20.0'	
						>1	w/pyrite U,R	14	60				
21													
				5.0/5.0	4.6/5.0	0				U	R-3.0		
22													
						1	w/chlorite + CaCO3 → U,R	10	20				
23							Euhedral CaCO3 in Healed fract →						
	23.5-24.0 ⊘ Dk gry Porph. andesite					1	w/chlorite U,R	12	70				
24													
						>1	MB? →						
25	24.8' >		8										
						2	U,R	10	45	1			
26				5.0/5.0	5.0/5.0		w/4 mm CaCO3 + Chlorite ST,R	16	40				
						1	ST,R	16	10	U	R-3.0		
27													
	27.8' Gradational Andesite Breccia					1	w/Brn ox ST,R	16	10				
28													

Box 2

Box 3

DEPTH SCALE: 1"=2'
DRILLER: Buck
LOGGED BY: WON
DATE: 4/10/03

SHANNON & WILSON, INC.

RECORD OF DRILLHOLE

SHEET 3 OF 11

BORING NO. 03-DD-231
PROJECT: H.H. Dam
PROJECT NO.: 21-1-09820-001
LOCATION:

DRILLING DATE: 4/1/03
DRILLING CO.: CRUX
DRILL RIG:
DRILL METHOD: HQ-3

DATUM: NAVD88
COLLAR ELEV.: 1150.79
INCLINATION: 87
AZIMUTH: 202

J - Joint, F - Fault, S - Shear, B - Bedding, F - Foliation
Description: SM - Smooth, R - Rough, SL - Slickensided
Profile: ST - Stepped, U - Undulating, P - Planar

DEPTH SCALE (FEET)	DESCRIPTION	GRAPHIC LOG	RUN NO.	CORE RECOVERY (%)	RQD (%)	FRACTURES PER FOOT	DISCONTINUITY DATA: TYPE AND SURFACE DESCRIPTION	JRC	GRAPHIC LOG	WEATHERING INDEX	STRENGTH INDEX	NOTES, WATER LEVELS, INSTRUMENTATION DRILLING FLUID	DEPTH SCALE (ELEV.)
28	Andesite Breccia; Groundmass-supported, Gravel-sized clasts of dk gry porph. Andesite		8 (CONT)			0				U	R-3.0		
29						0							
30	29.8' >		9			0							
31				5.0/5.0	5.0/5.0	0					R-3.0		
32	31.8' SHARP @ Fracture. Andesite Pyroclastic Lt gry, welded-partially welded breccia texture, Core is pitted in spots.					1	P,R	14	40	U		Abundant $CaCO_3$ infillings along healed Fractures	
33						3	MB?: P,R	8	70		R-2.5		
34							P,R	8	10				
35	Some breccia Texture 34.8 >		10			0	ST,R	16	50		R-2.0		
36						0					R-2.0		
37	37.1' SHARP			5.0/5.0	4.5/5.0	0				U			
38	Porphyritic Andesite Gray w/ tan-rust Red pockets lt gry phenocrysts to C-sand sized, interstitial pyrite					2	U,R	14	40		R-3.0		
39						1	U,R	10	60				
40	39.8' >		11			1	W/chlorite St,Sm	12	30				
41				5.0/5.0	5.0/5.0	0	W/some $CaCO_3$ U,R	8	30	U	R-3.0		
42						0							

DEPTH SCALE: 1"=2'
LOGGED BY: WDN
DRILLER: Buck
DATE: 4/1/03

SHANNON & WILSON, INC.

RECORD OF DRILLHOLE

SHEET 4 OF 11

BORING NO. 03-DD-231
PROJECT: H.H. Dam
PROJECT NO.: Z1-1-09880-001
LOCATION:

DRILLING DATE: 4/11/03
DRILLING CO.: CRUX
DRILL RIG:
DRILL METHOD: HQ-3

DATUM: NAVD88
COLLAR ELEV.: 1150.79
INCLINATION: -87
AZIMUTH: 202

J - Joint, F - Fault, S - Shear, B - Bedding, F - Foliation
Description: SM - Smooth, R - Rough, SL - Slickensided
Profile: ST - Stepped, U - Undulating, P - Planar

DEPTH SCALE (FEET)	DESCRIPTION	GRAPHIC LOG	RUN NO.	CORE RECOVERY (%)	RQD (%)	FRACTURES PER FOOT	DISCONTINUITY DATA: TYPE AND SURFACE DESCRIPTION	DISCONTINUITY DATA: JRC	DISCONTINUITY DATA: GRAPHIC LOG	WEATHERING INDEX	STRENGTH INDEX	NOTES, WATER LEVELS, INSTRUMENTATION DRILLING FLUID	DEPTH SCALE (ELEV.)
42			11 (CONT)			1	w/some CaCO3 P,R	8	20				
43						0							
44	43.8' Gradational Andesite Breccia: gray-brown hyaloclastic(?) groundmass					0							
45	44.8' >		12			0							
46	Increasing pyroclastic Texture, but still looks like And. Breccia			5.0/5.0	5.0/5.0	1	w/gouge & breccia U,R	10	50	U	R-2.5	→ Easier to peel w/ knife	
47						0						* Ab. gouge & breccia (3-8mm)	
48						0	U,SL	8	60				
49						2	U,SL	12	80-90				
50	49.8' >		13			0							
51						0							
52				5.0/5.0	5.0/5.0	0				U	R-2.5		
53						0							
54						1		8	50				
55	54.8 >					1	w/CaCO3+ Chlorite U,R; U,SL	8	80				
56	55.9 Sharp, Flow-bedded Contact		14	5.0/5.0	5.0/5.0	0	Flow bedding is parallel to and extends to 55.9'			U	R-2.5	STOP @ 56/55 on 4/10/03 START on 4/11/03 0800	

DEPTH SCALE: 1"=2'
LOGGED BY: WDH
DRILLER: Buck
DATE: 4/11/03

SHANNON & WILSON, INC.

RECORD OF DRILLHOLE

SHEET 5 OF 11

BORING NO. 03-DD-231
PROJECT: H.H. Dam
PROJECT NO.: 21I-09880-001
LOCATION:

DRILLING DATE: 4/11/03
DRILLING CO.: CRUX
DRILL RIG:
DRILL METHOD: HQ-3

DATUM: NAVD88
COLLAR ELEV.: 1150.79
INCLINATION: 87
AZIMUTH: 202

DEPTH SCALE (FEET)	DESCRIPTION	GRAPHIC LOG	RUN NO.	CORE RECOVERY (%)	RQD (%)	FRACTURES PER FOOT	DISCONTINUITY DATA: TYPE AND SURFACE DESCRIPTION	JRC	GRAPHIC LOG	WEATHERING INDEX	STRENGTH INDEX	NOTES, WATER LEVELS, INSTRUMENTATION DRILLING FLUID	DEPTH SCALE (ELEV.)
56	Andesite Pyroclastite: Welded breccia texture w/ ab brecciated pyroclastics		14 (cont)			1	w/calc3 U,SL	8	70				
57						0							
58						0							
59											R-2.0		
59.8						1	w/some calc3 U,R	10	50				
60	59.8' >		15								R-2.0		
	Basaltic Andesite to Porph. Andesite: Dark gray, aphanitic to 62.0', porph below w/ lt.gry pheno (~20%)												
61						2	w/calc3 U,R	12	50				
								14	50				
62				5.0/5.0	4.8/5.0	1	U,R	14	30	U	R-3.5		
63						1	w/chlorite P,R	8	30 75				
64						0	w/chlorite U,R	10	20 60				
65	64.7-Color change to green-gray Porph Andesite 64.8>		16			1							
66						0					R-3.0		
	66.8'			3.0/5.0	4.4/5.0	1	w/pyrite U,R	12	40				
67	Andesite Pyroclastite: Brecciated texture to 67.8', hyalaclastitic text below ab interstitial pyrite, lt.g-y to lt.green-gray									U		Core is "pitted" which is characteristic of thypno.	
68						0					R-2.0		
							U,R	12	40				
69						2	Breccias gouge + calc3 U,SL	6	80			Ab Breccia gouge	
70			17			>1			XXX	L	R-2.0		

DEPTH SCALE: 1"=2'
DRILLER: Buck

LOGGED BY: WDN
DATE: 4/14/03

SHANNON & WILSON, INC.

RECORD OF DRILLHOLE

SHEET 6 OF 11

BORING NO. 03-DD-Z31
PROJECT: H.H. Dam
PROJECT NO.: 21-1-09580-001
LOCATION:

DRILLING DATE: 4/11/03
DRILLING CO.: CRUX
DRILL RIG:
DRILL METHOD: HQ-3

DATUM: NAD88
COLLAR ELEV.: 1150.79
INCLINATION: 87
AZIMUTH: 202

ROCK TYPE: J - Joint, F - Fault, S - Shear, B - Bedding, F - Foliation
Description: SM - Smooth, R - Rough, SL - Slickensided
Profile: ST - Stepped, U - Undulating, P - Planar

DEPTH SCALE (FEET)	DESCRIPTION	GRAPHIC LOG	RUN NO.	CORE RECOVERY (%)	RQD (%)	FRACTURES PER FOOT	DISCONTINUITY DATA: TYPE AND SURFACE DESCRIPTION	JRC	GRAPHIC LOG	WEATHERING INDEX	STRENGTH INDEX	NOTES, WATER LEVELS, INSTRUMENTATION DRILLING FLUID	DEPTH SCALE (ELEV.)
70			17 (cont)				w/Breccia gouge U,SL	12	60		R-2.0	☆ Ab. Breccia gouge	
71				5.0/5.0	4.9/5.0		U,R	12	40				
72										U	R-1.5		
73	73.2' Andesite Breccia: gray, ground-mass-supported												
74							w/some CaCO3 U,R	10	40		R-3.0		
75	74.8' >						w/chlorite U,SL	12	56				
76	75.8-78.6' ⇒ Move of a pyroclastic Text., but still And. Breccia.		18	5.0/5.0	5.0/5.0						R3.0	Run 18 is all MBS. Loss strength @ 75.8' (easily scraped)	
77										U	R-2.0		
78													
79											R-3.0	∠78.6'	
80	79.8' >		19									Run 19 is all MBS	
81	80.6-82.6' ⇒ Breccia Clasts absent (Lt.gry Porph. And)			5.0/5.0	5.0/5.0					U	R-2.5-3.0		
82													
83													
84													

Box 8

Box 9

DEPTH SCALE: 1"=2'
DRILLER: Buck
LOGGED BY: WAN
DATE: 4/11/03

SHANNON & WILSON, INC.

RECORD OF DRILLHOLE

SHEET 7 OF 11

BORING NO. 03-DD-231
PROJECT: H.H. Dam
PROJECT NO.: 21-1-09880-001
LOCATION:

DRILLING DATE: 4/11/03
DRILLING CO.: CRux
DRILL RIG:
DRILL METHOD: HQ-3

DATUM: NAVD88
COLLAR ELEV.: 1150.79
INCLINATION: 87
AZIMUTH: 202

ROCK TYPE: J - Joint, F - Fault, S - Shear, B - Bedding, F - Foliation
Description: SM - Smooth, R - Rough, SL - Slickensided
Profile: ST - Stepped, U - Undulating, P - Planar

DEPTH SCALE (FEET)	DESCRIPTION	GRAPHIC LOG	RUN NO.	CORE RECOVERY (%)	RQD (%)	FRACTURES PER FOOT	DISCONTINUITY DATA: TYPE AND SURFACE DESCRIPTION	JRC	GRAPHIC LOG	WEATHERING INDEX	STRENGTH INDEX	NOTES, WATER LEVELS, INSTRUMENTATION DRILLING FLUID	DEPTH SCALE (ELEV.)
84	Andesite Breccia: (CONT)		19 (CONT)			0				U	R:2.5-3.0		
85	84.8' > Same -		20	5.0/5.0	5.0/5.0	0				U	R:2.5-3.0		
86						0							
87						0	R,U	12	60				
88						1							
89						0							
90	89.8' >		21			0					R:3.0	Run 21 is all MBs	
91	91.3' Gradational Andesite Pyroclastite: lt. gry, brecciated text., pilled			5.0/5.0	5.0/5.0	0				U	R:2.0		
92						0							
93	93.7' Gradational Porph. Andesite: Dk gry (~20%) lt. gry phens					0					R:3.0	Abundant MBs of healed fracts w/CaCO3+Chlorite	
94	94.8' > Same - Porph. Andesite; color to greenish gry		22	5.0/5.0	4.7/5.0	0	w/some breccia U,SL	8	85	U	R:3.0-3.5	Entire Run 22 has "spider-web" type healed fractures (CaCO3?)	
95						1							
96						2	w/some CaCO3 (x2) U,R	12	55/60				
97													
98													

Box 9
Box 10

DEPTH SCALE: 1"=2'
DRILLER: Buck
LOGGED BY: WOW
DATE: 4/11/03

SHANNON & WILSON, INC.

RECORD OF DRILLHOLE

SHEET 8 OF 11

BORING NO. 03-DD-231
PROJECT: H.H.Dam
PROJECT NO.: 21-1-09880-001
LOCATION:

DRILLING DATE: 4/11/03
DRILLING CO.: CRUX
DRILL RIG:
DRILL METHOD: HQ-3

DATUM: NAVD88
COLLAR ELEV.: 1150.79
INCLINATION: 87
AZIMUTH: 202

J - Joint, F - Fault, S - Shear, B - Bedding, F - Foliation
Description: SM - Smooth, R - Rough, SL - Slickensided
Profile: ST - Stepped, U - Undulating, P - Planar

DEPTH SCALE (FEET)	DESCRIPTION	GRAPHIC LOG	RUN NO.	CORE RECOVERY (%)	RQD (%)	FRACTURES PER FOOT	TYPE AND SURFACE DESCRIPTION	JRC	GRAPHIC LOG	WEATHERING INDEX	STRENGTH INDEX	NOTES, WATER LEVELS, INSTRUMENTATION DRILLING FLUID	DEPTH SCALE (ELEV.)
98	Porph. Andesite: (CONT)		22 (CONT)			1	w/CaCO3 → U,SL		50				
99	Top of tunnel						P,Sm	4	0				
							P,Sm	4	70				
100	99.8' >		23			>2	w/CaCO3 U,SL	12	60				
	Ab CaCO3-healed fractures					2	" U,R	14	45				
101							" U,R	14	35	U	R-3.5		
102				3.6/3.6	2.8/3.6	3	" P,SL	4	70				
							" U,R	12	25				
103	103.1 Sharp?					>1	w/CaCO3+ Chlorite → U,R	12	65			* Ab Breccia + Gouge	
	Andesite Pyroclastite: Lt. gry. 103.4' >		24			>0					R-1.5	Blocked OFF Run 24 ⇒ one Piece	
104				1.4/1.4	1.4/1.4					U	R-2.0		
	very bad rock					0							
105	Same 104.8' >		25										
	Abundant fractures w/clay/gouge infilling					2	w/Grout + breccia U,SL	10	40				
106							Partially Healed → U,R(SL)	N/A	85			* 3mm Gouge + breccia	
107				5.0/5.0	3.9/5.0	1	" U,R(SL)	N/A	65	U	R-1.5		
108						1	" U,R(SL)	N/A	70			* Ab Gouge (5mm)	
							U,SL	12	30			* Ab Gouge (3mm)	
109						2	GOUGE → U,SL	N/A	40			* Ab Gouge (5mm)	
							GOUGE → U,SL	N/A	40			* Ab Gouge (10mm)	
110	109.8-112.3 ⇒ 109.8' > Completely fractured + soft w/gouge + breccia These are partially heated		26			1							
111				5.0/5.0	2.7/5.0	>1	U,SL Abundant gouge + Breccia	14	60	U	R-1.5	Fractures to 112.3 are Not shown - completely fractured	
112						>0							

Box 10: 98–99.8'
Box 11: 99.8'–112.3'

DEPTH SCALE: 1"=2'
DRILLER: Buck
LOGGED BY: WDH
DATE: 4/11/03

SHANNON & WILSON, INC.

RECORD OF DRILLHOLE

SHEET 9 OF 11

BORING NO. 03-DD-231
PROJECT: H.H. Dam
PROJECT NO.: Z1-1-09880-001
LOCATION:

DRILLING DATE: 4/11/03
DRILLING CO.: CRUX
DRILL RIG:
DRILL METHOD: HQ-3

DATUM: NAVD88
COLLAR ELEV.: 1150.79
INCLINATION: 87
AZIMUTH: 202

J - Joint, F - Fault, S - Shear, B - Bedding, F - Foliation
Description: SM - Smooth, R - Rough, SL - Slickensided
Profile: ST - Stepped, U - Undulating, P - Planar

DEPTH SCALE (FEET)	DESCRIPTION	GRAPHIC LOG	RUN NO.	CORE RECOVERY (%)	RQD (%)	FRACTURES PER FOOT	TYPE AND SURFACE DESCRIPTION	JRC	GRAPHIC LOG	WEATHERING INDEX	STRENGTH INDEX	NOTES, WATER LEVELS, INSTRUMENTATION DRILLING FLUID	DEPTH SCALE (ELEV.)
112	Pyroclastite		26 (CONT)			1	U,SL	N/A	X			★ Gouge + Breccia	
113						2	U,SL	12	60	U	R1.5	★ Gouge + Breccia	
114						1	U,R	16	45, 75			Healed w/ grout	
115	very bad Rock; 114.8'		27			1?						Healed w/ grout	
116						1	w/Breccia U,SL	12	65				
117				5.0/5.0	4.7/5.0	0				U	R1.5		
118	117.8' Gradational; And. Breccia w/some pyroclastic Texture					1	w/gouge + Breccia U,SL	14	50		R-2.0	<117.8'	
119						>2	W/Breccia + gouge U,SL	12	50, 70				
120	Same; 119.8'	CL	28			>2	U,SL	14	CL				
121	Bottom of tung; 120.4'			4.4/5.0	3.7/5.0	2	U,SL	10	95	U	R-2.0		
							U,Sm	8	40				
							w/faint Slicks U,R	12	45				
122						0	U,R	12	75				
123						1	U,R	14	30			MB Rubble	
124						>1	U,SL	12	85				
125	124.8'		29			0							
126	And. Breccia w/ little pyro. Text.			5.0/5.0	4.9/5.0					U	R-2.5-3.0		

DEPTH SCALE: 1"=2'
DRILLER: Buck
LOGGED BY: WON
DATE: 4/11/03

SHANNON & WILSON, INC.

RECORD OF DRILLHOLE

SHEET 10 OF 11

BORING NO. 03-DD-231
PROJECT: H.H. Dam
PROJECT NO.: 211-09880-001
LOCATION:

DRILLING DATE: 4/ /03
DRILLING CO.: CRUX
DRILL RIG:
DRILL METHOD: HQ-3

DATUM: NAVD88
COLLAR ELEV.: 1150.79
INCLINATION: 87
AZIMUTH: 202

J - Joint, F - Fault, S - Shear, B - Bedding, F - Foliation
Description: SM - Smooth, R - Rough, SL - Slickensided
Profile: ST - Stepped, U - Undulating, P - Planar

DEPTH SCALE (FEET)	ROCK TYPE: DESCRIPTION	GRAPHIC LOG	RUN NO.	CORE RECOVERY (%)	RQD (%)	FRACTURES PER FOOT	DISCONTINUITY DATA: TYPE AND SURFACE DESCRIPTION	JRC	GRAPHIC LOG	WEATHERING INDEX	STRENGTH INDEX	NOTES, WATER LEVELS, INSTRUMENTATION DRILLING FLUID	DEPTH SCALE (ELEV.)
126			29 (CONT)			1	w/faint slicks + breccia → U,R	16	25				
127						0				U	R-2.5-3.0		
128						1	w/Brn ox P,R	8	45				
129						2	U,SL w/Breccia P,R	12 6	40 70 30				
130	129.8' > And. Breccia: Borderline Aphanitic		30			2			30	U	R-30		
131				5.0/5.0	5.0/5.0	2	w/Brn ox + CaCO3 U,SL	12	50				
132							w/faint slicks + Brn ox U,R	12	50				
133						0							
134						0							
135	134.8' > Same - Very few breccia frags		31			0							
136				5.0/5.0	4.3/5.0	2	U,SL P,R	8 6	60 30	U	R-2.5		
137						0							
138						2				40			
139						1	U,SL	10	25	50		w/Ab. Gouge + Breccia	
140	139.8' >		32										

DEPTH SCALE: 1"=2'
DRILLER: Buck
LOGGED BY: WDN
DATE: 4/ /03

SHANNON & WILSON, INC.

RECORD OF DRILLHOLE

03-DD-231

SHEET 11 OF 11

BORING NO. IN0600
PROJECT: HH Dam Fish Bypass
PROJECT NO.: 21-1-09880-001
LOCATION:

DRILLING DATE: 4/11/03
DRILLING CO.: CRUX
DRILL RIG:
DRILL METHOD: HQ-3

DATUM: NAVD88
COLLAR ELEV.: 1150.79
INCLINATION: 87°
AZIMUTH: 202

DEPTH SCALE (FEET)	DESCRIPTION	GRAPHIC LOG	RUN NO.	CORE RECOVERY (%)	RQD (%)	FRACTURES PER FOOT	TYPE AND SURFACE DESCRIPTION	JRC	GRAPHIC LOG	WEATHERING INDEX	STRENGTH INDEX	NOTES, WATER LEVELS, INSTRUMENTATION DRILLING FLUID	DEPTH SCALE (ELEV.)
140	And. Breccia		32 (CONT)			1	w/CaCO_3 P,SL	4	55				
141				5.0/5.0	4.9/5.0	1	P,R	4	50	U	R2.0		
142						1							
143							U,SL	10	40				
144						1	U,SL	12	25				
145	And. Breccia 144.8' >		33			2	w/gouge P,SL w/gouge + breccia U,SL	6 12	65/20			@ Ab Gouge at base of Run 32	
146				3.2/3.2	3.2/3.2	0				U	R2.0		
147						0							
148						1	U,SL w/gouge + breccia U,SL	14 10	60 60				
	Bottom of Hole @ 148.0 on 4/11/03 @ 1500												

DEPTH SCALE:
DRILLER:
LOGGED BY:
DATE:

SHANNON & WILSON, INC.

ING700

RECORD OF DRILLHOLE

SHEET 1 OF 12

BORING NO. 03-DD-232
PROJECT: H.H. Dam
PROJECT NO.: 21-1-09880-001
LOCATION:

DRILLING DATE: 3/31/03
DRILLING CO.: CRUX
DRILL RIG:
DRILL METHOD: HQ-3

DATUM: NAVD88
COLLAR ELEV.: 1155.01'
INCLINATION: 87°
AZIMUTH: 202°

J - Joint, F - Fault, S - Shear, B - Bedding, F - Foliation
Description: SM - Smooth, R - Rough, SL - Slickensided
Profile: ST - Stepped, U - Undulating, P - Planar

DEPTH SCALE (FEET)	DESCRIPTION	GRAPHIC LOG	RUN NO.	CORE RECOVERY (%)	RQD (%)	FRACTURES PER FOOT	TYPE AND SURFACE DESCRIPTION	JRC	GRAPHIC LOG	WEATHERING INDEX	STRENGTH INDEX	NOTES, WATER LEVELS, INSTRUMENTATION DRILLING FLUID	DEPTH SCALE (ELEV.)
0	OVERBURDEN: Gray, Si, Sa GR, w/ weathered slope-wash GM.		10" OVER CORE TO 1.0'										
1	Borderline between Andesite Porphery and Andesite Pyroclastite: Light gray to gray, Sc flow bedding, ab. very closely spaced IOS-stained fractures (some healed) to 7.0'. 1.0' >	CL CL CL CL	1									CORE LOSS From 1.0-2.0' => Per Driller	
2						>1				SL. W.	R-2.5		
3				4.0/5.0	1.9/5.0	3	IOS Rubble @ 1.8' → U,R; Brn ox → U,SM	10; 8	40	30			
4						>1	w/gouge → P,R; R,U	16; 12	70; 40				
5						2	Healed Brn ox fracts → w/gouge → P,R; → P,R	6; 6	35; 40				
6	6.0 >		2			>1	U,R	10	80				
7	7.0 Gradational					2	w/CaCO3 → U,R; w/Brn ox → U,R	14; 14	60; 60	SL. W	R-2.5		
8	Porph. Andesite: gray, scattered flow bedding of aphanitic Andesite, Mixture of pyroclastics and phenochrysts in the groundmass, 8.2' - Flow bedding			5.0/5.0	3.6/5.0	2	w/CaCO3 (x2) U,SL	12	30; 30		R-3.0	Gouge + Breccia	
9						0				U			
10						1							
11	10.7 Flow-bedded Contact; Andesite Breccia: gray, porph. groundmass w/pyroclastic frags + other frags (R-3.0) frags are f-gravel-sand sized. >10% 11.0' >		3			0	P,R	6	30				
12				5.0/5.0	5.0/5.0	0				U	R-3.0		
13						0							
14													

DEPTH SCALE: 1"=2'
DRILLER: Buck
LOGGED BY: WDN
DATE: 3/31/03

SHANNON & WILSON, INC.

RECORD OF DRILLHOLE

SHEET 2 OF 12

BORING NO. 03-DD-232
PROJECT: H. H. Dam
PROJECT NO.: 21-1-09880-001
LOCATION:

DRILLING DATE: 3/31/03
DRILLING CO.: CRUX
DRILL RIG:
DRILL METHOD: HQ3

DATUM: NAVD88
COLLAR ELEV.: 1155.01
INCLINATION: -77
AZIMUTH: 202

ROCK TYPE
J - Joint
F - Fault
S - Shear
B - Bedding
F - Foliation

Description
SM - Smooth
R - Rough
SL - Slickensided

Profile
ST - Stepped
U - Undulating
P - Planar

DEPTH SCALE (FEET)	DESCRIPTION	GRAPHIC LOG	RUN NO.	CORE RECOVERY (%)	ROD (%)	FRACTURES PER FOOT	DISCONTINUITY DATA: TYPE AND SURFACE DESCRIPTION	DISCONTINUITY DATA: JRC	DISCONTINUITY DATA: GRAPHIC LOG	WEATHERING INDEX	STRENGTH INDEX	NOTES, WATER LEVELS, INSTRUMENTATION DRILLING FLUID	DEPTH SCALE (ELEV.)
14			3 (cont)			0							
15						1	P, R	6	35				
16	16.0 → Some And. Breccia F-C GR-Size fragments		4	5.0/5.0	5.0/5.0	0							
17						0				U	R-3.0		
18						1	P, R	8	45				
19						0							
20						0							
21	21.0' →		5			0	MBs From Air Hammer for Overcoring					-STOP Drilling to Ream hole w/ HWT Air Hammer to 20.0' -Begin Drilling @ 1330 @ 21.0'	
22						0							
23				5.0/5.0	5.0/5.0	0							
24						1	w/CaCO3	P, SL	8	65			
25						0							
26	26.0' →		6			0							
27	Some And. Breccia			5.0/6.0	5.0/3.0	0				U	R-3.0		
28													

DEPTH SCALE: 1"=2'
LOGGED BY: WCP
DRILLER: Buck
DATE: 3/31/03

SHANNON & WILSON, INC.

RECORD OF DRILLHOLE

SHEET 3 OF 12

BORING NO. 03-DD-232
PROJECT: H.H. Dam
PROJECT NO.: 21-1-09880-001
LOCATION:

DRILLING DATE: 3/31/03
DRILLING CO.: CRUX
DRILL RIG:
DRILL METHOD: HQ-3

DATUM: NAVD88
COLLAR ELEV.: 1155.01
INCLINATION: 87
AZIMUTH: 202

J - Joint, F - Fault, S - Shear, B - Bedding, F - Foliation
Description: SM - Smooth, R - Rough, SL - Slickensided
Profile: ST - Stepped, U - Undulating, P - Planar

DEPTH SCALE (FEET)	ROCK TYPE: DESCRIPTION	GRAPHIC LOG	RUN NO.	CORE RECOVERY (%)	RQD (%)	FRACTURES PER FOOT	DISCONTINUITY DATA: TYPE AND SURFACE DESCRIPTION	JRC	GRAPHIC LOG	WEATHERING INDEX	STRENGTH INDEX	NOTES, WATER LEVELS, INSTRUMENTATION DRILLING FLUID	DEPTH SCALE (ELEV.)
28			6 (CONT)			0							
29						>1	w/some CaCO3 U,R MBs?	12	10			Green Breccia Clast in Porph. groundmass	
30						1	w/CaCO3 U,R	10	25				
31	31.0' > Same And. Breccia		7			1							
32						2	w/well dev. slicks CaCO3 + Breccia U,SL	12	70-90°				
33				5.0/5.0	3.1/5.0	1	" U,SL U,R	12 14	75 30	U	R3.0		
34						0							
35						1	U,SM	10	60				
36	36.0' > And. Breccia		8			2	w/CaCO3 + breccia U,SL U,R	10 12	55 15				
37						0							
38				5.0/5.0	5.0/5.0	1	w/CaCO3 U,R	16	45	U			
39						0							
40						1	w/gouge + breccia + some slicks + CaCO3 U,R	14	60				
41			9			0	MB Rubble					1450-1500 Change hydraulic connection	
42													

DEPTH SCALE: 1" = 2'
DRILLER: Buck
LOGGED BY: WDN
DATE: 3/31/03

SHANNON & WILSON, INC.

RECORD OF DRILLHOLE

SHEET 4 OF 12

BORING NO. 03-DD-23C
PROJECT: H.H. Dam
PROJECT NO.: 21-1-08880-001
LOCATION:

DRILLING DATE: 3/31/03
DRILLING CO.: CRUX
DRILL RIG:
DRILL METHOD: HQ3

DATUM: NAVD88
COLLAR ELEV.: 1155.01
INCLINATION: 87
AZIMUTH: 202

DEPTH SCALE (FEET)	DESCRIPTION	GRAPHIC LOG	RUN NO.	CORE RECOVERY (%)	RQD (%)	FRACTURES PER FOOT	TYPE AND SURFACE DESCRIPTION	JRC	GRAPHIC LOG	WEATHERING INDEX	STRENGTH INDEX	NOTES, WATER LEVELS, INSTRUMENTATION DRILLING FLUID	DEPTH SCALE (ELEV.)
42			9 (cont)			1	P, Sm	6	30				
							P, SM	6	30				
43	43.1' Faulted Contact			5.0 / 5.0	4.7 / 5.0	2	w/gouge + breccia → P, SL	4	60				
	Andesite Porphyry: Red-brown w/ matrix (15%) and Felsic (10%) Pheno Chrysots. massive.												
44						0				U	R-3.0		
45						0							
46	46.0' →					0							
			10										
47	46.2' - 48.4' Seam of Andesite Breccia			5.0 / 5.0	5.0 / 5.0	0							
48						2	w/Breccia + gouge	U, SL	6	40	U	R-3.0	
							w/Breccia + gouge	U, SL	8	50			
49						1							
								P, R	8	30			
50						0							
51	51.0 - Faulted Contact					1	w/calc3	U, SL	14	35			
	Andesite Breccia: 51.0' →		11										MB Rubble
							w/calc3 (x2)	P, SL	6	35° (x2)			
52						2							
				5.0 / 5.0	4.8 / 5.0								
53						0				U	R-3.0		
								U, SL	8	55			
54								U, R	12	30 x			
						3		U, SL	8	60 x x			w/ calc gouge + breccia
55													
56						0							

DEPTH SCALE: 1" = 2'
DRILLER: Bucke

LOGGED BY: WRW
DATE: 3/31/03

SHANNON & WILSON, INC.

RECORD OF DRILLHOLE

SHEET 5 OF 12

BORING NO. 03-CD-232
PROJECT: H.H. Dam
PROJECT NO.: 21-1-09880-001
LOCATION:

DRILLING DATE: 3/31/03
DRILLING CO.: CRUX
DRILL RIG:
DRILL METHOD: HQ-3

DATUM: NAVD88
COLLAR ELEV.: 1155.01
INCLINATION: 87
AZIMUTH: 202

DEPTH SCALE (FEET)	DESCRIPTION	GRAPHIC LOG	RUN NO.	CORE RECOVERY (%)	RQD (%)	FRACTURES PER FOOT	TYPE AND SURFACE DESCRIPTION	JRC	GRAPHIC LOG	WEATHERING INDEX	STRENGTH INDEX	NOTES, WATER LEVELS, INSTRUMENTATION DRILLING FLUID	DEPTH SCALE (ELEV.)
56	Rhyolite Breccia		12			0							
57						0							
58				5.0/5.0	4.9/5.0	1	w/ gouge breccia U, R	12	45	U	R-3.0		
59						0							
60						2	U, R U, R	16 16	20 30	> MB's?			
61	Andesite Breccia 61.0' >		13			1	P, SL	6	45		R-3.5	Stronger Breccia Frag	
62						0						All MB's ON Run 13	
63				5.0/5.0	5.0/5.0	0				U	R-3.0		
64						0							
65						0							
66	Same And. Breccia 66.0' >		14			0							
67						0						Run 14 All ONE PIECE	
68				5.0/5.0	5.0/5.0	0				U	R-3.0		
69						0							
70													

DEPTH SCALE: 1"=2'
LOGGED BY: WOW
DRILLER: Cruz
DATE: 3/31/03

SHANNON & WILSON, INC.

RECORD OF DRILLHOLE

SHEET 6 OF 12

BORING NO. 03-DP-232
PROJECT: M.H. Ranch
PROJECT NO.: 211-09880-001
LOCATION:

DRILLING DATE: 3/31/03
DRILLING CO.: CRUX
DRILL RIG:
DRILL METHOD: HQ-3

DATUM: NAD88
COLLAR ELEV.: 1158.01
INCLINATION: 87
AZIMUTH: 202

Box X

Box Y

Box Z

DEPTH SCALE (FEET)	DESCRIPTION	GRAPHIC LOG	RUN NO.	CORE RECOVERY (%)	RQD (%)	FRACTURES PER FOOT	TYPE AND SURFACE DESCRIPTION	JRC	GRAPHIC LOG	WEATHERING INDEX	STRENGTH INDEX	NOTES, WATER LEVELS, INSTRUMENTATION DRILLING FLUID	DEPTH SCALE (ELEV.)
70	And. Breccia (cont.)		14 (cont)			0						1650 - Done Drilling for Day 3/31/03	
71	71.0' >		15			0							
72	Andesite Breccia			5.0/5.0	4.7/5.0	0				U	R-3.0		
	71.8-72.3 - large green gray breccia clast.												
73						1	w/CaCO3	P,R	8	60			
74						1		R,U	12	80			
75						2		P,R	8	45			
								R,U	12	45			
76						1	w/CaCO3	P,SL	6	30			
	And. Breccia 76.0' >		16										
77						0							
78				5.0/5.0	4.2/5.0	0				U	R-3.0		
79						0							
80						2		R,U	12	60			
								P,R	8	85	XX XX	MB Rubble among st possible gouge filled fractures	
81	81.0' >					2	w/gouge	R,U	14	60			
	And. Breccia softer (altered) gray, ab. fracts w/gouge		17				w/gouge	P,R	8	60			
82				5.0/5.0	3.6/5.0	0				U	R-2.5		
83						1	w/gouge breccia	P,SL	8	55			
84													

DEPTH SCALE: 1" = 2'
DRILLER: Buck

LOGGED BY: WOD
DATE: 4/1/03

SHANNON & WILSON, INC.

RECORD OF DRILLHOLE

SHEET 7 OF 12

BORING NO. 03-00-232
PROJECT: H.H. Dam
PROJECT NO.: 211-09800-001
LOCATION:

DRILLING DATE: 4/1/03
DRILLING CO.: CRux
DRILL RIG:
DRILL METHOD: HQ3

DATUM: NAVD88
COLLAR ELEV.: 1155.01
INCLINATION: 87
AZIMUTH: 202

DEPTH SCALE (FEET)	DESCRIPTION	GRAPHIC LOG	RUN NO.	CORE RECOVERY (%)	RQD (%)	FRACTURES PER FOOT	TYPE AND SURFACE DESCRIPTION	JRC	GRAPHIC LOG	WEATHERING INDEX	STRENGTH INDEX	NOTES, WATER LEVELS, INSTRUMENTATION DRILLING FLUID	DEPTH SCALE (ELEV.)
84	And. Breccia		17 (cont)			2	U,SL	8	30				
							U,SL	6	40				
							U,SL	8	45		R2.5		
85						5	P,R	7	30				
							All w/gouge + breccia (1-2-3mm)	U,R	10	30			
								U,SL	12	40			
								St,R	14	45			
								P,SL	6	20			
86	86.0' >		18			2			30				
				4.7/5.0	4.7/5.0		(1-3-5mm) w/gouge + breccia	R,U	12	XXX 45		Poss. MB Rubbly Zone.	
87				5.0/5.0		2	11	U,SL	10	30	U	R2.5-3.0	
88						0							
89						0							
90						1	w/gouge + breccia	U,SL	8	50 XXX XXX			
91	91.0' >		19			0							
								U,R	10	50			
92						1	w/CaCO3					R2.5-3.0	
93				5.0/5.0	5.0/5.0	1	No gouge	U,SL	8	50	U		
94						1	w/CaCO3			80			
95						0	No gouge	U,SL	8				
96	96.0' >		20			0						Run 20 All one piece	
97				5.0/5.0	5.0/5.0	1	Healed fracture CaCO3 + GROUT ~2-3mm wide	→		60	U	R-3.0	
98													

DEPTH SCALE: 1" = 2'
DRILLER: Buck

LOGGED BY: WDW
DATE: 4/1/03

SHANNON & WILSON, INC.

RECORD OF DRILLHOLE

SHEET 8 OF 12

BORING NO. 03-DD-232
PROJECT: H.H. Dam
PROJECT NO.: 241-09820-001
LOCATION:

DRILLING DATE: 4/1/03
DRILLING CO.: CRUX
DRILL RIG:
DRILL METHOD: HQ-3

DATUM: NAVD88
COLLAR ELEV.: 1155.01
INCLINATION: 87
AZIMUTH: 202

DEPTH SCALE (FEET)	DESCRIPTION	GRAPHIC LOG	RUN NO.	CORE RECOVERY (%)	RQD (%)	FRACTURES PER FOOT	TYPE AND SURFACE DESCRIPTION	JRC	GRAPHIC LOG	WEATHERING INDEX	STRENGTH INDEX	NOTES, WATER LEVELS, INSTRUMENTATION DRILLING FLUID	DEPTH SCALE (ELEV.)
98	And. Breccia (cont)		20 (cont)			0							
99						0					R-3.0		
100						0							
101						0							
101.0	And. Breccia - Clast-supported Pyroclastic texture		21	(4.5) 5.0 / 5.0	(4.5) 5.0 / 5.0	0				U	R-2.0 2.5	All one Piece (Run 21)	
102						0							
103						0							
104						0							
105						0							
106						0							
106.0'	And. Breccia (cont)		22	5.0 / 5.0	5.0 / 5.0	0				U	R-2.0 2.5	Run 22 All MBs	
107						0							
108						0							
109						0							
110						0							
111						0							
111.0'			23	5.0 / 5.0	5.0 / 5.0	0				U	R-2.0 2.5	Run 23 All one piece	
112													

DEPTH SCALE: 1"=2'
DRILLER: Buck

LOGGED BY: WDW
DATE: 4/1/03

SHANNON & WILSON, INC.

RECORD OF DRILLHOLE

SHEET 9 OF 12

BORING NO. 03-DD-232
PROJECT: H.H. Dam
PROJECT NO.: 21-1-09880-001
LOCATION:

DRILLING DATE: 4/1/03
DRILLING CO.: CRUX
DRILL RIG:
DRILL METHOD: HQ3

DATUM: NAVD88
COLLAR ELEV.: 1155
INCLINATION: 87
AZIMUTH: 202

J - Joint, F - Fault, S - Shear, B - Bedding, F - Foliation
Description: SM - Smooth, R - Rough, SL - Slickensided
Profile: ST - Stepped, U - Undulating, P - Planar

DEPTH SCALE (FEET)	ROCK TYPE: DESCRIPTION	GRAPHIC LOG	RUN NO.	CORE RECOVERY (%)	RQD (%)	FRACTURES PER FOOT	DISCONTINUITY DATA: TYPE AND SURFACE DESCRIPTION	JRC	GRAPHIC LOG	WEATHERING INDEX	STRENGTH INDEX	NOTES, WATER LEVELS, INSTRUMENTATION DRILLING FLUID	DEPTH SCALE (ELEV.)
112			23 (CONT)			0							
113						0							
114						0							
115						0							
116	Same - And. Breccia 116.0' >		24			0							
117				5.0/5.0	5.0/5.0	0							
118						1	U,SL	8	60	U	R-2.5		
119						0							
120						1	W/CaCO3 U,SL	8	35				
121.0' 121	121.0' >		25			1	W/CaCO3 U,SL	10	65				
122						0							
123				5.0/5.0	5.0/5.0	0				U	R-2.5		
124	124.0 - Subtle change to Pyroclastite texture - No strength change					0							
125						2	U,R	14	40				
126							P,R	8	30				

Box 12

Box 13

DEPTH SCALE: 1"=2'
DRILLER: Buck
LOGGED BY: WDN
DATE: 4/1/03

SHANNON & WILSON, INC.

RECORD OF DRILLHOLE

BORING NO. 03-DD-232
PROJECT: H.H. Dam
PROJECT NO.: 21-1-09880-001
LOCATION:

DRILLING DATE: 4/1/03
DRILLING CO.: CRUX
DRILL RIG:
DRILL METHOD: HQ-3

DATUM: NAVD88
COLLAR ELEV.: 1155.01
INCLINATION: 87
AZIMUTH: 202

J - Joint, F - Fault, S - Shear, B - Bedding, F - Foliation
Description: SM - Smooth, R - Rough, SL - Slickensided
Profile: ST - Stepped, U - Undulating, P - Planar

DEPTH SCALE (FEET)	ROCK TYPE: DESCRIPTION	GRAPHIC LOG	RUN NO.	CORE RECOVERY (%)	RQD (%)	FRACTURES PER FOOT	DISCONTINUITY DATA: TYPE AND SURFACE DESCRIPTION	JRC	GRAPHIC LOG	WEATHERING INDEX	STRENGTH INDEX	NOTES, WATER LEVELS, INSTRUMENTATION DRILLING FLUID	DEPTH SCALE (ELEV.)
126	126.4 And. Pyroclastite SHARP		26			1	w/Brn ox staining U,R	14	25		R-2.5		
	Porpheritic Andesite: Dk. gry w/ H. gry pheno chrysts (30%)			5.0/5.0	5.0/5.0								
127						1	w/Brn ox staining U,R	12	15				
128						0				U	R-3.0		
							w/CaCO3 U,SL	10	55				
129						2	w/CaCO3 U,R	8	40				
130	130.0'– Grades to darker gray + 10-15% phenochrysts					1	P,R	8	60		R-3.5		
131.0 131	Same – And. Porphery (Basaltic And.) w/ varying amounts of phenochrysts. ab. CaCO3-filled healed fractures. 131.0' >		27			3	w/CaCO3 U,R(x2)	12	30			Abundant Rubble w/Brn ox staining on fract. faces.	
							sl. gouge U,SL	10	30				
							Brn ox		55				
132						1	U,R	12	30				
133				5.0/5.0	3.7/5.0	0				U	R-3.5		
134						0							
135						2	U,R	12	30				
							w/CaCO3 → U,R	10	45				
136	136.0 >		28			0							
137						0					R-3.5		
138				5.0/5.0	5.0/5.0	1	MB?? U,R	14	25	U			
	138.5' Gradational light gray Andesite Breccia. Resembles a welded [pyroclastite] but has R-3.0 strength												
139						1	w/Breccia + partially healed w/ pyrite U,R	12	75		R-3.0		
140													

Box 13

Box 14

DEPTH SCALE: 1"=2'
DRILLER: Buck
LOGGED BY: WDN
DATE: 4/1/03

SHANNON & WILSON, INC.

RECORD OF DRILLHOLE

SHEET 11 OF 12

BORING NO. 03-DD-232
PROJECT: H.H. Dam
PROJECT NO.: 21-1-09880-001
LOCATION:

DRILLING DATE: 4/1/03
DRILLING CO.: CRUX
DRILL RIG:
DRILL METHOD: HQ-3

DATUM: NAVD88
COLLAR ELEV.: 1155.01
INCLINATION: 87
AZIMUTH: 202

J - Joint, F - Fault, S - Shear, B - Bedding, F - Foliation
Description: SM - Smooth, R - Rough, SL - Slickensided
Profile: ST - Stepped, U - Undulating, P - Planar

DEPTH SCALE (FEET)	ROCK TYPE: DESCRIPTION	GRAPHIC LOG	RUN NO.	CORE RECOVERY (%)	RQD (%)	FRACTURES PER FOOT	DISCONTINUITY DATA: TYPE AND SURFACE DESCRIPTION	JRC	GRAPHIC LOG	WEATHERING INDEX	STRENGTH INDEX	NOTES, WATER LEVELS, INSTRUMENTATION DRILLING FLUID	DEPTH SCALE (ELEV.)
140			28 (cont)			0					R-3.0		
141	Same but less strong And. Pyroclastite w/ Breccia Text. 141.0 >		29			1	U, SL	8	80 60		R-2.5		
142	ab. interstitial pyrite + Flow-bedding					0							
143				5.0/5.0	5.0/5.0	1	W/gouge + breccia U, SL	10	30	U	R-2.0	★ gouge (~5-10 mm)	
144						0							
145						0							
146	146.0' >		30			2	w/ab healed fractures w/ Chlorite + Pyrite infilling? U, R U, SL	14 14	45 40				
147	147.5 Flow-bedded, gradational Porphyritic Andesite: (Basaltic And.?) Dk. gry, 20% phenochrysts.					3	w/CaCO3 + Pyrite U, R w/CaCO3 U, R w/CaCO3 P, R	10 8 6	45 50 65		R-2.0		
148				3.8/3.8	2.5/3.8	3	w/CaCO3 P, R P, R P, Sm U, R W/CaCO3 P, R U, R	4 6 4 8 6 12	60 65 30 40 60 40	U	R-3.5		
149						1							
150	149.8 > 150.3 - Grades to light gray- and less phenochrysts to 151.7'		31	1.2/1.2	1.0/1.2	2	P, R w/CaCO3 P, R	6 4	50 text 60	U	R-3.5	Blocked Off @ 149.8'	
151			32			3	w/CaCO3 P, SL U, R w/CaCO3 + Pyrite U, SL w/gouge + breccia + CaCO3 + Pyrite U, R	6 10 8 10	60 50 40 50			Done Drilling @ 1320 4/1/03 Need 5' more casing to finish	
152	Porph. Andesite			5.0/5.0	4.1/5.0	1				U	R-3.5	START AGAIN on 4/2/03 @ 0735	
153						0							
154							w/Chlorite + CaCO3 U, R	8	65				

DEPTH SCALE: 1"=2'
DRILLER: Buck
LOGGED BY: WDN
DATE: 4/1/03

SHANNON & WILSON, INC.

RECORD OF DRILLHOLE

SHEET 12 OF 12

BORING NO. 03-DD-232 | DRILLING DATE: 4/1/03 | DATUM: NAVD88
PROJECT: H.H. Dam | DRILLING CO.: CRUX | COLLAR ELEV.: 1155.01
PROJECT NO.: 21-1-09880-001 | DRILL RIG: | INCLINATION: 87
LOCATION: | DRILL METHOD HQ-3 | AZIMUTH: 202

DEPTH SCALE (FEET)	DESCRIPTION	GRAPHIC LOG	RUN NO.	CORE RECOVERY (%)	RQD (%)	FRACTURES PER FOOT	TYPE AND SURFACE DESCRIPTION	JRC	GRAPHIC LOG	WEATHERING INDEX	STRENGTH INDEX	NOTES, WATER LEVELS, INSTRUMENTATION DRILLING FLUID	DEPTH SCALE (ELEV.)
154			32 (cont)			1	w/Chlorite $CaCO_3$ U,SL	8	70				
155						3	w/$CaCO_3$ P/R P,Sm	6 4	40 30				
156						0							
157	Bottom of Boring @ 156.0 @ 0800 4/2/03												

DEPTH SCALE: | LOGGED BY:
DRILLER: | DATE:

SHANNON & WILSON, INC.

RECORD OF DRILLHOLE

SHEET 1 OF 12

IN0800

BORING NO. 03-DD-233
PROJECT: H.H. Dam Fish Bypass
PROJECT NO.: 21-1-09880-001
LOCATION:

DRILLING DATE: 3/13/03
DRILLING CO.: CRUX
DRILL RIG: BURLEY 5500
DRILL METHOD: HQ

DATUM: NAVD88
COLLAR ELEV.: 1164.5
INCLINATION: VERT
AZIMUTH: N/A

J - Joint, F - Fault, S - Shear, B - Bedding, F - Foliation
Description: SM - Smooth, R - Rough, SL - Slickensided
Profile: ST - Stepped, U - Undulating, P - Planar

DEPTH SCALE (FEET)	ROCK TYPE DESCRIPTION	GRAPHIC LOG	RUN NO.	CORE RECOVERY (%)	RQD (%)	FRACTURES PER FOOT	DISCONTINUITY DATA: TYPE AND SURFACE DESCRIPTION	JRC	GRAPHIC LOG	WEATHERING INDEX	STRENGTH INDEX	NOTES, WATER LEVELS, INSTRUMENTATION DRILLING FLUID (Times)	DEPTH SCALE (ELEV.)
0	Overburden: Brown silty, sandy GRAVEL, w/ (HP) 30% 0.5'			N/A	N/A							0800	
	Top of Rock		1										
1				N/A	N/A								
	Top of Rock 1.5'						U,R	12	30°	U	R-3.0		
2	Porphyritic Andesite: mod. strength, gray, 10-20% Phenochrysts, Closely spaced discontinuities with pyrite and calcite infillings, unweathered.			1.6/1.6	0.9'/1.6	4	U,R ST,R w/Brn staining R,U	11 12 10	30° 10° 10°			w/Breccia + poss gravel/sand A=~4mm	
3	3.1'		2			0						0812	
4						1	w/Brn staining P,R	8	45°				
5	Sc. med spaced healed fracts/stringers <1mm wide w/ CaCO3 SiO2 + Pyrite infilling			(4.6) +4 5.0/5.0	(4.6) +4 5.0/5.0	3	St,Sm w/Breccia + gouge (x2) U,R	12 10 10	30° 60° 45	U	R-3.0		
6	- Sc isolated zenoliths / breccia fragments in ground mass					1	P,R	10	40°				
7						0							
8	8.1		3			0							
9	Same					1	U,R	12	30°				
10				4.8'/4.8	4.4'/4.8	3	w/Brn ox P,R U,R w/Brn ox P,R	6 12 6	30° 60° 30°	U	R-3.0		
11						1	w/Brn ox, pyrite + CaCO3 poss gouge R,U	8	80°			Rubble Healed	
12						0							
13	Same 12.9'		4			0						Blocked off @ 12.9' Because there was 0.4' of RZ in R-3 and tube is jammed	
14				2.7/2.7	2.7/2.7	0				U	R-3.0		

Box 1

Box 2

0.3'

DEPTH SCALE: 1"=2'
DRILLER: Mike
LOGGED BY: WDN
DATE: 3/13/03

SHANNON & WILSON, INC.

RECORD OF DRILLHOLE

SHEET 2 OF 12

BORING NO. 03-DD-233
PROJECT:
PROJECT NO.:
LOCATION:

DRILLING DATE:
DRILLING CO.:
DRILL RIG:
DRILL METHOD:

DATUM:
COLLAR ELEV.:
INCLINATION:
AZIMUTH:

J - Joint, F - Fault, S - Shear, B - Bedding, F - Foliation
Description: SM - Smooth, R - Rough, SL - Slickensided
Profile: ST - Stepped, U - Undulating, P - Planar

DEPTH SCALE (FEET)	ROCK TYPE: DESCRIPTION	GRAPHIC LOG	RUN NO.	CORE RECOVERY (%)	RQD (%)	FRACTURES PER FOOT	DISCONTINUITY DATA: TYPE AND SURFACE DESCRIPTION	JRC	GRAPHIC LOG	WEATHERING INDEX	STRENGTH INDEX	NOTES, WATER LEVELS, INSTRUMENTATION DRILLING FLUID	DEPTH SCALE (ELEV.)
14	Porphyritic Andesite (CONT)		4 (CONT)										
15						1	w/CaCO3 + abslicks U,Sl	8	55°			w/Rubble	
16	Same 15.6 >		5			0							
17				2.5/2.5	2.5/2.5	1	w/gouge/Breccia Chlorite + Pyrite P,R	6	65°	U	R-3.0		
18	18.1' >		6			0							
19						1	w/CaCO3 St,Sm	12	35°				
20	Abundant very closely spaced, healed fractures to closely spaced			5.0/5.0	5.0'/5.0	1	w/2-4mm wide Chlorite + Brn ox No gouge or Breccia St,R	14	30°	U	R-3.0		
21						1	w/pyrite, CaCO3 + Some Breccia R,U	16	70°				
22						0							
23	23.1 >		7			2	P,R	6	10°				
24	Same -					1	w/ab pyrite, CaCO3, poss gouge > St,R / P,R	12 / 10	15 / 80°				
25				5.0/5.0	4.7/5.0	0				U	R-3.0		
26						1	w/well dev. CaCO3 + Chlorite P,R	6	30°				
27						0							
28						0							

Box 2 8.1'
Box 3
7.1'
Box 7

DEPTH SCALE:
DRILLER:
LOGGED BY:
DATE:

SHANNON & WILSON, INC.

RECORD OF DRILLHOLE

SHEET 3 OF 12

BORING NO.	DRILLING DATE:	DATUM:
PROJECT:	DRILLING CO.:	COLLAR ELEV.:
PROJECT NO.:	DRILL RIG:	INCLINATION:
LOCATION:	DRILL METHOD:	AZIMUTH:

J - Joint, F - Fault, S - Shear, B - Bedding, F - Foliation

Description: SM - Smooth, R - Rough, SL - Slickensided

Profile: ST - Stepped, U - Undulating, P - Planar

Box 4

DEPTH SCALE (FEET)	ROCK TYPE: DESCRIPTION	GRAPHIC LOG	RUN NO.	CORE RECOVERY (%)	RQD (%)	FRACTURES PER FOOT	DISCONTINUITY DATA: TYPE AND SURFACE DESCRIPTION	JRC	GRAPHIC LOG	WEATHERING INDEX	STRENGTH INDEX	NOTES, WATER LEVELS, INSTRUMENTATION DRILLING FLUID	DEPTH SCALE (ELEV.)
28	Andesit 28.1' >		8			1	w/pyrite P, Sl	6	30°			Note: End of R7 does not match R8 top.	
29						0							
30				5.0'/5.0	5.0/5.0	1	w/chlorite + sc slicks P, R	4	35°	U	R-3.0		
31	30.9' Andesite Breccia: groundmass-supported No strength diff between groundmass (Porph) and frags (porph of diff shade)					0							
32						1	w/ab pyrite R, U	14	25°				
33						1		14	55°				
	Same - Very scattered Breccia frags w/ Porph. Andesite (widely spaced) 33.1 >		9				w/pyrite, breccia chlorite. St, R						
34						2	w/Brn ox pyrite sc slicks P, R	8	15				
							w/pyrite + $CaCO_3$ (1mm) St. Sm	12	50°				
35				5.0/5.0	4.5/5.0	1	w/chlorite + brn ox (stain) (≈ 5mm) same strength P, R	6	20	U	R-3.0		
36						0							
37						0							
							R, U	14	35°				
							R, U	12	30	← Some Rubble			
38	38.1' >		10			3	w/$CaCO_3$ Pyrite (~1mm) U, SL	10	20				
	Same -						w/pyrite R, U	12	25				
39						2	w/chlorite + pyrite U, Sl	10	45				
							to w/grn coloring P, R	8	10				
40				5.0/5.0	4.8/5.0	2	$CaCO_3$ + Pyrite grn → St, R	14	80	U	R-3.0		
							grn → U, R	12	25				
41						3	w/5-15mm of green coloring along fract → St, R	16	75			w/Brn staining + ~1mm $CaCO_3$	
							U, R	14	25				
42						3	St, R	18	20				

5.5

DEPTH SCALE:	LOGGED BY:	
DRILLER:	DATE:	SHANNON & WILSON, INC.

RECORD OF DRILLHOLE

SHEET 4 OF 12

BORING NO.	DRILLING DATE:	DATUM:
PROJECT:	DRILLING CO.:	COLLAR ELEV.:
PROJECT NO.:	DRILL RIG:	INCLINATION:
LOCATION:	DRILL METHOD:	AZIMUTH:

J - Joint, F - Fault, S - Shear, B - Bedding, F - Foliation

Description: SM - Smooth, R - Rough, SL - Slickensided

Profile: ST - Stepped, U - Undulating, P - Planar

DEPTH SCALE (FEET)	ROCK TYPE: DESCRIPTION	GRAPHIC LOG	RUN NO.	CORE RECOVERY (%)	RQD (%)	FRACTURES PER FOOT	DISCONTINUITY DATA: TYPE AND SURFACE DESCRIPTION	JRC	GRAPHIC LOG	WEATHERING INDEX	STRENGTH INDEX	NOTES, WATER LEVELS, INSTRUMENTATION DRILLING FLUID	DEPTH SCALE (ELEV.)
42			10 (CONT)				U, Sm	14	25				
							U, R	14	30				
43							U, R	16	5				
	43.1' > Highly brecciated from 43.1'–46.1 – Healed w/ $CaCO_3$, Pyrite – There are pockets of lower strength material (2.5) – Scattered flow bedding @ 44.1–44.8'		11			>3	U, Sl	12	65			☆ largest Disc. yet.	
							w/ ≥ 10mm of gouge + breccia → P, Sl	8				Abundant Rubble @ RH Top	
44						>1					R-3.0 – 2.5 in spots		
45	44.8 change under flow bedding to green-gray aphanitic andesite w/ fine mafic phenocrysts			5.0/5.0	4.0/5.0	1	St, R	16	10°	U	R-3.0	44.8'	
46						0							
47						1	w/ some gouge/Breccia P, R	10	30				
48	– Grades to dark gray/purple @ 47.7 48.1' > Basaltic Andesite: Dark gray (med-med-high strength, dark gray abundant healed fracts w/ $CaCO_3$ – some are near vertical.		12			1							
							P, S	4	45				
49						1	St, S	14	50°				
50				5.0/5.0	4.0'/5.0	1	U, S	10	50°				
51						1	P, R	4	60°	U	R-3.5		
							U, S	8		75°			
	51.6						St, R	18		35°		w/ ~2mm gouge	
52	Andesite Breccia: Sc flow bedding ab healed fracts. gray – lt. gray. Porphyritic groundmass					2							
							P, R	8	50°		St, Sm (12)		
53						2 4	w/ ab gouge + breccia $CaCO_3$ lt. gry flow bedding ∥ to Disc		30°		R-3.0		
	53.1' > Same – w/ clast strength of ~2.5		13						65	10°		w/ 5mm of green staining	
54						1	U, R	12	20				
							U, R	12					
				5.0/5.0	4.5/5.0		St, R	18					
55										U	R-3.0	w/ exception of Breccia frags in melt ≈ 2.5	
5.6						1							
56							P, R	8	15°				

Box 6

DEPTH SCALE:	LOGGED BY:	
DRILLER:	DATE:	SHANNON & WILSON, INC.

RECORD OF DRILLHOLE

BORING NO.
PROJECT:
PROJECT NO.:
LOCATION:

DRILLING DATE:
DRILLING CO.:
DRILL RIG:
DRILL METHOD:

DATUM:
COLLAR ELEV.:
INCLINATION:
AZIMUTH:

ROCK TYPE: J - Joint, F - Fault, S - Shear, B - Bedding, F - Foliation
Description: SM - Smooth, R - Rough, SL - Slickensided
Profile: ST - Stepped, U - Undulating, P - Planar

DEPTH SCALE (FEET)	DESCRIPTION	GRAPHIC LOG	RUN NO.	CORE RECOVERY (%)	RQD (%)	FRACTURES PER FOOT	TYPE AND SURFACE DESCRIPTION	JRC	GRAPHIC LOG	WEATHERING INDEX	STRENGTH INDEX	NOTES, WATER LEVELS, INSTRUMENTATION DRILLING FLUID	DEPTH SCALE (ELEV.)
56	Same Andesite Breccia		13 (cont)			0	U,R	12	45				
57						2	P,R	8	50				
58	58.1'					3	P,SL	6	40				
							U,SL	8	40°				
			14				w/pyrite + $CaCO_3$ St,Sm	6	15				
59						0							
60				5.0/5.0	5.0/5.0	0							
	Porphyritic Andesite (No breccia frags) lt. gray w/ wht. pheno. SC Breccia clasts						w/pyrite, $CaCO_3$ poss. slicks P,R	8	50°	U	R-3.0		
61						2	U,Sm	6	25°				
62						0							
63	Same 63.1		15			0							
64						0							
65				5.0/5.0	4.5/5.0	0				U	R-3.0		
66						0							
67						2			75				
							St,R	12	10			* = 8mm gouge	
68	Same 68.1'		16			2	P,R	8	55			* = w/Breccia	
							U,Sl	8	45				
							U,SL	12					
69				5.0/5.0	4.2/5.0	0							
70													

Box 7

Box 8

Tom Notes H_2O issuing from 01-DD-222 ~R18

Driller Notes Loosing water over R14 → R16 + R17 + R18 w/R16 being the worst

DEPTH SCALE:
DRILLER:
LOGGED BY:
DATE:

SHANNON & WILSON, INC.

RECORD OF DRILLHOLE

SHEET 6 OF 12

BORING NO.
PROJECT:
PROJECT NO.:
LOCATION:

DRILLING DATE:
DRILLING CO.:
DRILL RIG:
DRILL METHOD:

DATUM:
COLLAR ELEV.:
INCLINATION:
AZIMUTH:

ROCK TYPE

J - Joint
F - Fault
S - Shear
B - Bedding
F - Foliation

Description
SM - Smooth
R - Rough
SL - Slickensided

Profile
ST - Stepped
U - Undulating
P - Planar

DISCONTINUITY DATA

DEPTH SCALE (FEET)	DESCRIPTION	GRAPHIC LOG	RUN NO.	CORE RECOVERY (%)	RQD (%)	FRACTURES PER FOOT	TYPE AND SURFACE DESCRIPTION	JRC	GRAPHIC LOG	WEATHERING INDEX	STRENGTH INDEX	NOTES, WATER LEVELS, INSTRUMENTATION DRILLING FLUID	DEPTH SCALE (ELEV.)
70			R16 (CONT)			3	Z-4mm CaCO3 → P,U w/Bn disc. → P,R + green discoloration → U,R	12 10 14	05 30	U	R-3.0		
71						0							
72						3	w/ab green coloration (4mm) → P,R ab CaCO3 → P,SL P,SL P,R	10 10 8 8	50 70° 500				
73.1	Same — grading to greenish gray 73.1' >					1							
74			17			2							
75				5.0/5.0	4.7/5.0	0	w/Brn staining U,R U,R	12 14	300 XXXX	U	R-3.0		
76	- w/some green aphanitic fragments/clasts					0							
77	- green-gray					2	w/grn coloration P,R P,R	12 10	40 20				
78	78.1 >		18			0							
79						0				U	R-3.0		
80	79.1 — Andesite Breccia Hi gry w/aphanitic fragments, in a porphyritic ground mass			5.0/5.0	4.8/5.0	1	w/grn coloration P,R	12	415				
81						1	w/clayey gouge (1mm) St,SL	16	High > 1, partially healed fract			Tom notes that cuttings issuing from 01-DD-22 in this interval	
82						0						area	
83.1	83.1' >		19	5.0/5.0	4.1/5.0	3	w/ab pyrite + green coloration → P,R P,R P,R P,Su	8 12 8 6	60 30 60 40°	U	R-3.0		
84	No Breccia from groundmass												

DEPTH SCALE:
DRILLER:

LOGGED BY:
DATE:

SHANNON & WILSON, INC.

RECORD OF DRILLHOLE

SHEET 7 OF 12

BORING NO.
PROJECT:
PROJECT NO.:
LOCATION:

DRILLING DATE:
DRILLING CO.:
DRILL RIG:
DRILL METHOD:

DATUM:
COLLAR ELEV.:
INCLINATION:
AZIMUTH:

ROCK TYPE

J - Joint
F - Fault
S - Shear
B - Bedding
F - Foliation

Description
SM - Smooth
R - Rough
SL - Slickensided

Profile
ST - Stepped
U - Undulating
P - Planar

DISCONTINUITY DATA

DEPTH SCALE (FEET)	DESCRIPTION	GRAPHIC LOG	RUN NO.	CORE RECOVERY (%)	RQD (%)	FRACTURES PER FOOT	TYPE AND SURFACE DESCRIPTION	JRC	GRAPHIC LOG	WEATHERING INDEX	STRENGTH INDEX	NOTES, WATER LEVELS, INSTRUMENTATION DRILLING FLUID	DEPTH SCALE (ELEV.)
84			19 (CONT)			0							
85							w/Brn coloration U,SM	10	~45				
86						1							
87	– Breccia frags re appear in groundmass @ 86.7'					2	U,R	14	~40				
							w/green discoloration (same strength) U,R	10	35				
88	88.1'					1	U,R	12	~60				
			20										
89						2	w/grn coloration → P,R	12	~60°				
90						0	→ P,R	10	~40°				
91				5.0/5.0	4.9/5.0	0				U	R:3.0		
92						0							
93	93.1'					0							
			21										
94	Same – Andesite Breccia					0							
95				5.0/5.0	5.0/5.0	0						All MBs in RZ1	
96						0				U	R:3.0		
97						0							
98						0							

Box 10

3.1

Box 11

DEPTH SCALE:
DRILLER:

LOGGED BY:
DATE:

SHANNON & WILSON, INC.

RECORD OF DRILLHOLE

SHEET 8 OF 12

BORING NO. | DRILLING DATE: | DATUM:
PROJECT: | DRILLING CO.: | COLLAR ELEV.:
PROJECT NO.: | DRILL RIG: | INCLINATION:
LOCATION: | DRILL METHOD: | AZIMUTH:

DEPTH SCALE (FEET)	ROCK TYPE DESCRIPTION	GRAPHIC LOG	RUN NO.	CORE RECOVERY (%)	RQD (%)	FRACTURES PER FOOT	DISCONTINUITY DATA: TYPE AND SURFACE DESCRIPTION	JRC	GRAPHIC LOG	WEATHERING INDEX	STRENGTH INDEX	NOTES, WATER LEVELS, INSTRUMENTATION DRILLING FLUID	DEPTH SCALE (ELEV.)
98	98.1 > Andesite Breccia cont		22			0							
99				(2.0)	(1.5)	0							
100	99.7' Basaltic Andesite dark gray			2.5 / 2.5	2.3 / 2.5	2	w/Breccia U,SL	10	60°	U	R-3.0	Faulted Contact w/ Basaltic Andesite	
							R,U	16	50°			Scattered flow bedding	
101	100.6 > Abundantly fractured w/random, Non planar pcs. w/No infilling 101.4' > 101.6 >		23	0.8 / 0.8	0.8 / 0.8	0				U	R-3.0	All MBs Had to retrieve End Piece of core	
102			24			3	St,SI	14	60				
				1.7 / 1.7	1.1 / 1.7		U,SI	10	65°	U		Abundant flow Bedding	
103	102.9'					3	No fillings < P,SI	6	70	Healed	R-3.0		
	103.3' 103.1' > Red-Brown Porphyritic Andesite		25			4	U,SL	12	45				
									40				
							St,SI	14	30				1410
							U,SI	4	65				
104						2	w/CaCO3 St,R	14	70				
				5.0'	3.5		P,Sm	4	40				
105				5.0	5.0	3	P,SI	6	40		R-3.0		
	105.4 Ab. healed + open fracts w/CaCO3 (1-2mm)						w/2-4mm CaCO3 U,SL	8	45°	U			
106	106.1 Andesite Pyroclastite: light gray, ab healed fracts ab soft zones, ab. partially healed fractures (Note: RQD IS NOT INDICATIVE!)					>2	St,Sm	10	40			Abundant healed fracts (Brecciated)	
							w/CaCO3 P,SI	4	65				
							w/Gouge+ breccia +CaCO3 P,SL	6	20°	← Contact			
107							P,SL	4	60°		R-2.5		
						>2	w/CaCO3 +Slicks R,U	14	50				
108	Soft (R2.0-1.0) pyroclastites @108.0' 108.1 >					1					R2.0		1437
			26						70				
109	Same - Pyroclastite (subaqueous)					0	U,SI	10			R-1.5-2.0	Very Poor Rock!	
				5.0 / 5.0	4.8 / 5.0		All have 5mm Ca Kal/ Gouge/clay In Fillings (~2-10mm)				w/Sand 1.0		
110						1	U,SI	10	70	U		Driller notes slower Drilling on R-27	
111						0							
							U,SI	12	65				
112						1							

Box 11

Box 12

DEPTH SCALE: | LOGGED BY:
DRILLER: | DATE: | SHANNON & WILSON, INC.

RECORD OF DRILLHOLE

SHEET 9 OF 12

BORING NO. | DRILLING DATE: | DATUM:
PROJECT: | DRILLING CO.: | COLLAR ELEV.:
PROJECT NO.: | DRILL RIG: | INCLINATION:
LOCATION: | DRILL METHOD: | AZIMUTH:

DEPTH SCALE (FEET)	DESCRIPTION	GRAPHIC LOG	RUN NO.	CORE RECOVERY (%)	RQD (%)	FRACTURES PER FOOT	TYPE AND SURFACE DESCRIPTION	JRC	GRAPHIC LOG	WEATHERING INDEX	STRENGTH INDEX	NOTES, WATER LEVELS, INSTRUMENTATION DRILLING FLUID	DEPTH SCALE (ELEV.)
	ROCK TYPE		J - Joint, F - Fault, S - Shear, B - Bedding, F - Foliation	Description: SM - Smooth, R - Rough, SL - Slickensided			Profile: ST - Stepped, U - Undulating, P - Planar; DISCONTINUITY DATA						
112	Subaqueous texture		26 (cont)				U,Sl	12	55		R-3.5		
113	113.1' >		27			1	w/gouge U,Sl	12	75°		R-2.0		
114				(4.8)	(4.0)	1							
115				5.0/5.0	4.0/5.0	0							
	Diffuse Contact @ 115.5						w/some CaCO3 R,U		60	U			
116	Basaltic Andesite, dark gray					2	R,U	16	60°		R-3.0 to 3.5		
							P,R	6	50				
							P,R	6	50				
117						4	R,U	12	60				
							w/chlorite + CaCO3 → R,U	12	50				
	Seam of pyroclastics of R3.0 117.6-118.1'						R,U	12	65				
118	118.1' >					2	P,Sm	14	100				
	118.5' Contact is ~45° + appears baked.		28										
119	Porphyritic Andesite: dark gray w/ lt.gray phenocrysts.					1	R,U	14	50				
							U,SL	6	90°				
120				5.0/6.0	4.1/5.0	2	R,St	16	70	U	R-3.0		
121						>2	R,U	18	70-90°				
							R,U	16	60°				
122						3	w/gouge breccia P,R	12	70°				
							P,R	12	70°				
							P,R	8	50				
							w/som CaCO3 P,R	8	55				
123	123.1' >					1							
	Massive Porph. Andesite (some)		29										
124						1	w/Som CaCO3 P,R	6	40				
				5.0/5.0	4.9/5.0				50	U	R-3.0		
125						2	w/CaCO3 + some gouge between P,Sl	6	40				
							P,Sl	6					
126							P,R	6	30				

Box 12 (113.1')
Box 13
Box 14 (123.1')

DEPTH SCALE: | LOGGED BY:
DRILLER: | DATE:

SHANNON & WILSON, INC.

RECORD OF DRILLHOLE

SHEET 10 OF 12

BORING NO.
PROJECT:
PROJECT NO.:
LOCATION:

DRILLING DATE:
DRILLING CO.:
DRILL RIG:
DRILL METHOD:

DATUM:
COLLAR ELEV.:
INCLINATION:
AZIMUTH:

DEPTH SCALE (FEET)	DESCRIPTION	GRAPHIC LOG	RUN NO.	CORE RECOVERY (%)	RQD (%)	FRACTURES PER FOOT	TYPE AND SURFACE DESCRIPTION	JRC	GRAPHIC LOG	WEATHERING INDEX	STRENGTH INDEX	NOTES, WATER LEVELS, INSTRUMENTATION DRILLING FLUID	DEPTH SCALE (ELEV.)
126	Porph. Andesite dark gray w/ light gray pheno		29 (cont)			2	w/grn staining P,R	8	30				
127						1	w/CaCO3 → P,Sl	4	45				
							R,U	16	55				
128	128.1' >					4	P,Sm	6	40				
							P,Sm	6	45				
	128.7		30				w/grn discoloration + some CaCO3 P,Sl	4	60	U,R	R-3.0		
129	Pyroclastite ab pyrite infillings highly brecciated, but healed			5.0/5.0	3.9/5.0	4	P,SL	4	20, 65	10			
							U,R	14	45				
130						0				U	R-2.0 or (less)		
131						0							
132						3	w/Breccia St,Sl	14	60				
							U,R	16	50				
133	133.5' 133.1' > Random flow bedding @ Contact						P,R	10	35				
			31				w/CaCO3 R,U	16	55		R-2.5		
134	Porphyritic Andesite Dark gray w/ lt. gray rhenocrysts					2	" R,U	18	65				
							" R,U	16	30				
135				5.0/5.0	3.9/5.0	1	R,U	12	30	U	R-3.0		
							St,Sm	12	45				
136						3	P,R	8	40				
							R,U	10	45				
137						1							
							R,U	10	50				
138	138.1' >					>4	w/poss slicks or plumose U,Sm	8	60				
			32				St,R	16	30				
	Abundant flow texture w/sc Breccia clasts suspended in groundmass (all same strength)						St,R	16	30				
139				5.0/5.0	3.2/5.0	4	U,R	14	35				
							U,R	12	65				
							w/faint slicks U,R	12	60	U	R-3.0		
							U,R	16	50				
140							St,R	18					

Box 14

Box 15

DEPTH SCALE:
DRILLER:

LOGGED BY:
DATE:

SHANNON & WILSON, INC.

RECORD OF DRILLHOLE

SHEET 11 OF 12

BORING NO.
PROJECT:
PROJECT NO.:
LOCATION:

DRILLING DATE:
DRILLING CO.:
DRILL RIG:
DRILL METHOD:

DATUM:
COLLAR ELEV.:
INCLINATION:
AZIMUTH:

Box 15

Box 16

DEPTH SCALE (FEET)	DESCRIPTION	GRAPHIC LOG	RUN NO.	CORE RECOVERY (%)	RQD (%)	FRACTURES PER FOOT	TYPE AND SURFACE DESCRIPTION	JRC	GRAPHIC LOG	WEATHERING INDEX	STRENGTH INDEX	NOTES, WATER LEVELS, INSTRUMENTATION DRILLING FLUID	DEPTH SCALE (ELEV.)
140	Porphyritic Andesite		32 (CONT)			2	R,U	12	45				
141						2	St,R	16	35				
							St,R	16					
142						3	w/CaCO3 (some) St,R	18	30				
							R,U	12	45				
143							R,U	14	50				
	Same 143.1' >		DONE DRILLING FOR DAY @ 1700 3/13/03			1							
144	Brecciated + healed w/Pyrite + CaCO3 143.1 - 143.5		33										
	144.6 - Pyrite + CaCO3 seam			(1.8)	(1.5)	1	w/CaCO3 R,U	14	40				
145							w/Faint slickes R,U	12	35				
	145.2' - Pyrite + Calcite seam			5.0	4.6	2	" R,U	12	65	U	R-3.0		
146				5.0	5.0		" St,R	14	45				
						2	w/calcs U,SL	10	40				
147							P,SL	8	40				
	147.7 - Flow bedding ~2" thick					2	U,SL	10	40				
148													
	148.1 - 150.0; 148.1' > Brecciated, healed texture		34			1	w/CaCO3 U,SI	10	15				
149						1							
150				5.0	5.0	0					R-3.0		
				5.0	5.0					U			
151						1	w/CaCO3 + Pyrite U,R	12	40				
152						1	" P,R	8	35				
	- 152.6 - 60° flow bedding + increasing lt. grey phenocrysts 153.1' >												
153			35	5.0	5.0	0					R-3.0		
				5.0	5.0					U	R-2.0		
154	Pyroclastics: Brecciated +												

DEPTH SCALE:
DRILLER:

LOGGED BY:
DATE:

SHANNON & WILSON, INC.

RECORD OF DRILLHOLE

SHEET 12 OF 12

BORING NO. | DRILLING DATE: | DATUM:
PROJECT: | DRILLING CO.: | COLLAR ELEV.:
PROJECT NO.: | DRILL RIG: | INCLINATION:
LOCATION: | DRILL METHOD: | AZIMUTH:

DEPTH SCALE (FEET)	DESCRIPTION	GRAPHIC LOG	RUN NO.	CORE RECOVERY (%)	RQD (%)	FRACTURES PER FOOT	TYPE AND SURFACE DESCRIPTION	JRC	GRAPHIC LOG	WEATHERING INDEX	STRENGTH INDEX	NOTES, WATER LEVELS, INSTRUMENTATION DRILLING FLUID	DEPTH SCALE (ELEV.)
	ROCK TYPE		J - Joint, F - Fault, S - Shear, B - Bedding, F - Foliation		Description: SM - Smooth, R - Rough, SL - Slickensided		Profile: ST - Stepped, U - Undulating, P - Planar						
							DISCONTINUITY DATA						
154	heated w/ R<2 tuff seams and clasts - No fractures		35 (CONT)			1	ST, R	20	25/60				
155						0				U	R-2.0		
156						0							
157	156.9' Porphyritic Andesite					0					R-3.0		
158	158.1 >		36			0					R-3.0		
159	158.8' Brecciated Porph. Andesite w/pyroclastic ground mass + some pyroclastic Breccia Rags			5.0/5.0	5.0/5.0	0					R-2.5		
160						1	clean	P, R	6	68	U		
161						0							
162						0							
163						0							
	BOB @ 163.1 on 3/14/03 @ 0920												

DEPTH SCALE: | LOGGED BY:
DRILLER: | DATE:

SHANNON & WILSON, INC.

Top of Casing 4.3' ± 1.0' BGS 8" Diameter Monument

RECORD OF DRILLHOLE

SHEET 1 OF 8

BORING NO. 03-DD-234 EX-0100
PROJECT: H. H. Dam
PROJECT NO.: 21-1-09880-001
LOCATION: N=102464.2 E=1763483.6

DRILLING DATE: 3/24/03
DRILLING CO.: CRUX
DRILL RIG:
DRILL METHOD: HQ

DATUM: NAVD88
COLLAR ELEV.: 1160.24
INCLINATION: 90°
AZIMUTH: NA

J - Joint, F - Fault, S - Shear, B - Bedding, F - Foliation
Description: SM - Smooth, R - Rough, SL - Slickensided
Profile: ST - Stepped, U - Undulating, P - Planar

DEPTH SCALE (FEET)	ROCK TYPE DESCRIPTION	GRAPHIC LOG	RUN NO.	CORE RECOVERY (%)	RQD (%)	FRACTURES PER FOOT	DISCONTINUITY DATA TYPE AND SURFACE DESCRIPTION		JRC	GRAPHIC LOG	WEATHERING INDEX	STRENGTH INDEX	NOTES, WATER LEVELS, INSTRUMENTATION DRILLING FLUID	DEPTH SCALE (ELEV.)
0	CONCRETE:													
1	Weathered Andesite: Red-brown silty, sandy GRAVEL; wet;		14" CORE TO 2.2 FEET										Begin Drilling @ 1425 3/24/03	
2	ANDESITE BRECCIA! Slight subaqueous text.) gray w/ lt. gry breccia fragments 2.2' >		1			>1	w/Brn ox on Rubble	R,U	12	50	MB	Rubble (?) or WX		
3				2.7/2.7	1.0/2.7	2		R,U	18	50	U	R-3.0		
							w/Brn ox on face	St,R	16	40				
4								St,R	18	10 50				
						3	w/Brn ox + some CaCO3	P,R	8	60°				
							"	P,R	8					
5	4.9 >		2			3								
							W/Brn staining + CaCO3	U,R	12	70-90				
6						1	"			75		R-3.0		
7				5.0/5.0	1.6/5.0	>1		U,SM	8		U			
	7.7'						w/Abgouge	P,R		60		R-1.0	7.4 Gouge 7.7	
8	And. Breccia w/ pyroclastic groundmass - appears matrix-supported groundmass = R-1.5 fragments = R-3.0					1						R-1.5-3.0		
								P,R	12	40				
9							w/Grn stain	P,R	6	50				
						3	w/gouge + Breccia	U,R	12	70	MB			
10	Diffuse change to DK gry Porph Andesite 9.9 >		3					P,R	8	45				
						>2	Gouge + Breccia				U	R-3.0		
11				2.1/2.4	0.8/2.4	>2	Some CaCO3						Zone is completely fractured!	
12							Gouge + Breccia							
13	Core loss 12.3 >		4			>1							Blocked off	
				2.6/2.6	0.6/2.6	>2		St,R	12	60			Run is Totally fractured	
							w/Brn stain	P,R	10	55				
14							w/CaCO3 + Breccia	U,R	12	50				

Box 1

Box 2

DEPTH SCALE: 1"=2'
DRILLER: Topher
LOGGED BY: WDN
DATE: 3/24/03

SHANNON & WILSON, INC.

RECORD OF DRILLHOLE

03-DD-234

SHEET 2 OF 8

BORING NO. EX0100
PROJECT: H.H. Dam
PROJECT NO.: Z1-09880-001
LOCATION:

DRILLING DATE: 3/24/03
DRILLING CO.: CRUX
DRILL RIG:
DRILL METHOD: HQ

DATUM: NAVD88
COLLAR ELEV.: 1160.24
INCLINATION: 90°
AZIMUTH: N/A

DEPTH SCALE (FEET)	DESCRIPTION	GRAPHIC LOG	RUN NO.	CORE RECOVERY (%)	RQD (%)	FRACTURES PER FOOT	TYPE AND SURFACE DESCRIPTION	JRC	GRAPHIC LOG	WEATHERING INDEX	STRENGTH INDEX	NOTES, WATER LEVELS, INSTRUMENTATION DRILLING FLUID	DEPTH SCALE (ELEV.)
14	Dark gray Porph. Andesite		4 (CONT)			>2	w/Red Brn clay gouge P,SL	4	75				
15	14.9		5			1	w/Brn Stain P,R	8	75	U	R-3.0		
16						4	" P,R	10	25			Lost Mud Circulation 16-17.5'	
17				3.6/4.7	1.0/4.7		" U,R	14	65 10				
17.5	Faulted/Fractured Contact					>1	w/CaCO3 U,SL	8	70			★ Gouge	
18	Andesite Pyroclastic? light green gray						Gouge + Breccia						
	18.4	CL CL CL CL				>1	U,SL	14			R-2.0	★ Gouge	
19						0	Gouge + Breccia					Blocked off	
	19.6												
20			6			2	w/Breccia + gouge U,SL	8	80		R-2.0		
							" P,R	6	45				
21	20.8' Grades into And. Breccia w/ Pyroclastic groundmass		5.3/6.3	2.7/3.3		1	w/gouge + Breccia + CaCO3 U,SL	10	55	U	R-2.0	3.0	
22				5.3/5.3	2.7/5.3	>2	P,SL	8	55				
							" U,R	12	65				
23						1	w/Chlorite, CaCO3 gouge + breccia St,R	14	45			★ Abundant Gouge (≤10mm) ab. random slicked faces	
24							U,R	14	80				
						>2	Sheared Zone → USL						
25	Pyroclastite? 24.9'		7				w/CaCO3	10(63)	75				
						3	U,SL	12	65				
26				3.8/3.8	0.8/3.8		St,R		10	U	R-2.0	Completely fractured	
27						>1	ab. CaCO3 stringers U,SL	10					
						1	P,R	8	50			completely Brecciated w/gouge below 27.7'	
28													

Box 2

Box 3

DEPTH SCALE: 1"=2'
LOGGED BY: WEW
DRILLER: Topher
DATE: 3/24/03

SHANNON & WILSON, INC.

RECORD OF DRILLHOLE

SHEET 3 OF 8

BORING NO. 03-00-234 EX-0100
PROJECT: H.H. Dam
PROJECT NO.: 21-1-09880-001
LOCATION:

DRILLING DATE: 3/24/03
DRILLING CO.: CRUX
DRILL RIG:
DRILL METHOD: HQ

DATUM: NAD88
COLLAR ELEV.: 1160.24
INCLINATION: 90°
AZIMUTH: N/A

Box 3

Box 4

DEPTH SCALE (FEET)	DESCRIPTION	GRAPHIC LOG	RUN NO.	CORE RECOVERY (%)	RQD (%)	FRACTURES PER FOOT	TYPE AND SURFACE DESCRIPTION	JRC	GRAPHIC LOG	WEATHERING INDEX	STRENGTH INDEX	NOTES, WATER LEVELS, INSTRUMENTATION DRILLING FLUID	DEPTH SCALE (ELEV.)
28			7 (CONT)			>1	COMPLETELY FRACTURED	→					
29	Pyroclastite 28.7' >		8	1.2/1.2	1.2/1.2	0	w/gouge U,SL	8			R-2.0	Blocked off	
30	29.9' >		9			1							
31	31.0' Fractured Contact Dark gray, Porph. Andesite					1	w/CaCO3 (x2) U,R	14			R-2.0		
32				5.0/5.0	4.0/5.0	1	w/Chlorite R,U	14		U	R-3.0		
33						2	" R,U	14					
34						2	St,R R,R w/gouge + Breccia + CaCO3 → U,R P,R	12 8 8					
35	34.6' Subtle change to a more pyro-clastic phase w/less strength 34.9' >		10			1	St,Sm	12			R-2.5-3.0		
36						2	P,R	12			R-2.5-3.0		
37				5.0/5.0	4.8/5.0	3	w/CaCO3 P,SL U,SM	6 8		U			
38	37.6 Porph. Andesite, dark gray w/ lt. gry pheno. Lt. black					1	w/CaCO3 → St,R P,R St,R	14 10 14			R-3.0		
39						1	P,R	8					
40	39.9' 39.9' > Abrupt change at top of RH: Andesite Pyroclastite: light gray, welded to partially welded pumice, ash + breccia frags.		11			1	P,Sm	4				Done Drilling For Day @ 1700 3/24/03 Beg Tm 3/25/03 @ 0715	
41				5.0/5.0	4.6/5.0	1	w/CaCO3 P,R	10		U	R-2.0		
42													

DEPTH SCALE: 1"=2'
DRILLER: Topher

LOGGED BY: WDM
DATE: 3/25/03

SHANNON & WILSON, INC.

RECORD OF DRILLHOLE

SHEET 4 OF 8

03-DD-234

BORING NO. EX-0100
PROJECT: H.H. Dam
PROJECT NO.: 21-1-09880-001
LOCATION:

DRILLING DATE: 3/24/03
DRILLING CO.: CRUX
DRILL RIG:
DRILL METHOD: HQ

DATUM: NAVD88
COLLAR ELEV.: 1160.24
INCLINATION: 90°
AZIMUTH: N/A

J - Joint, F - Fault, S - Shear, B - Bedding, F - Foliation
Description: SM - Smooth, R - Rough, SL - Slickensided
Profile: ST - Stepped, U - Undulating, P - Planar

DEPTH SCALE (FEET)	ROCK TYPE DESCRIPTION	GRAPHIC LOG	RUN NO.	CORE RECOVERY (%)	RQD (%)	FRACTURES PER FOOT	DISCONTINUITY DATA TYPE AND SURFACE DESCRIPTION	JRC	GRAPHIC LOG	WEATHERING INDEX	STRENGTH INDEX	NOTES, WATER LEVELS, INSTRUMENTATION DRILLING FLUID	DEPTH SCALE (ELEV.)
42	Andesite Pyroclastite CONT.		11 (CONT)			1	P,R	8	25				
43						1	P,R	8	25				
44						1	w/gouge P,Sm	2	20				
45	44.9 >		12			0							
46	Same Dk gry, high angle ashy seam @ 49.9 - 50.2'					0							
47				5.0/5.0	4.9/5.0	2	ST,R	14	20	U	R-2.0		
48						2	U,R	12	30				
							U,R	12	10				
49						2	U,R	14	50			☆ gouge + breccia	
							w/ab gouge + breccia U,SL	8 →	80				
							P,R	6	40				
50	49.9' >		13			0							
51							w/some gouge U,SL	10	60		R-2.0		
52				5.0/5.0	4.5/5.0	2	w/Breccia U,R	14	20	U			
						1	w/CaCO3 U,R	16	70				
53						3	U,Sm	10	40		R-2.5		
	53.7						P,R	10	10				
54	Basaltic Andesite						w/Chlorite + Pyrite + Staining P,R	8	50		R-3.0-3.5		
	54.6					0							
55	54.9' >										R-2.5		
56			14	5.0/5.0	4.4/5.0	0	w/CaCO3 + gouge U,Sl	8	65	U	R-2.5		

Box 5

0.1

Box 6

DEPTH SCALE: 1"=2'
DRILLER: Topher
LOGGED BY: WDH
DATE: 3/25/03

SHANNON & WILSON, INC.

03-00-234

RECORD OF DRILLHOLE

SHEET 5 OF 8

BORING NO. EX-0100
PROJECT: H.H. Dam
PROJECT NO.: 21-1-09880-001
LOCATION:

DRILLING DATE: 3/1/03
DRILLING CO.: CREX
DRILL RIG:
DRILL METHOD: HQ

DATUM: NAVD88
COLLAR ELEV.: 1160.24
INCLINATION: 90°
AZIMUTH: N/A

DEPTH SCALE (FEET)	DESCRIPTION	GRAPHIC LOG	RUN NO.	CORE RECOVERY (%)	RQD (%)	FRACTURES PER FOOT	TYPE AND SURFACE DESCRIPTION (J - Joint, F - Fault, S - Shear, B - Bedding, F - Foliation; SM - Smooth, R - Rough, SL - Slickensided; ST - Stepped, U - Undulating, P - Planar)	JRC	GRAPHIC LOG	WEATHERING INDEX	STRENGTH INDEX	NOTES, WATER LEVELS, INSTRUMENTATION DRILLING FLUID	DEPTH SCALE (ELEV.)
56	56.5' Gradational Contact		14 (cont)			3	w/CaCO3 → P,SI	8	60		R-2.5		
	Basaltic Andesite;						w/CaCO3 P,R	6	10				
57	Dark gray, aphanitic										R-3.5		
						1	w/Chlorite+ CaCO3 P,R	8	10				
58													
						0							
59							w/CaCO3 → U,R	14	35				
						3	w/chlorite+ CaCO3+ Pyrite → U,R	12	75				
60	59.9' →						→ P,R	10	55				
0.3	Same - Basaltic Andesite		15				w/Chlorite+ CaCO3 → P,SI	4	50				
						2	w/CaCO3 U,SM	4	20				
61													
						1	R,U	12	50	U	R-3.5		
62				5.0/5.0	4.5/5.0		w/CaCO3 P,R	8	20				
						1							
63													
						0							
64													
						2	w/Chlorite+ CaCO3 P,SM	4	25				
65	64.9' →						w/Chlorite P,R	8	70				
	65.3' Gradational Contact		16				w/Chlorite+ CaCO3 U,SL	12	25		R-3.5		
66	Andesite Pyroclastite; Lt. gray w/pumice frags, partially welded					1					R-2.0		
				5.0/5.0	5.0/5.0		w/gouge+ Breccia U,SL	10	70	U			
67						0							
68						1	w/gouge+ CaCO3 U,SI	10	50				
69													
						2	w/gouge+ Breccia → U,R	12	70				
9.9							→ P,R	10	30				
70	69.9' →												

Box 6

Box 7

DEPTH SCALE: 1"=2'
DRILLER: Topher

LOGGED BY: WDW
DATE: 3/25/03

SHANNON & WILSON, INC.

03-DD-254

RECORD OF DRILLHOLE

SHEET 6 OF 8

BORING NO. EX-0100
PROJECT: H.H. Dam
PROJECT NO.: 21-1-09880-001
LOCATION:

DRILLING DATE: 3/ /03
DRILLING CO.: CRUX
DRILL RIG:
DRILL METHOD: HQ

DATUM: NAVD88
COLLAR ELEV.: 1160.24
INCLINATION: 90°
AZIMUTH: N/A

DEPTH SCALE (FEET)	DESCRIPTION	GRAPHIC LOG	RUN NO.	CORE RECOVERY (%)	RQD (%)	FRACTURES PER FOOT	TYPE AND SURFACE DESCRIPTION	JRC	GRAPHIC LOG	WEATHERING INDEX	STRENGTH INDEX	NOTES, WATER LEVELS, INSTRUMENTATION DRILLING FLUID	DEPTH SCALE (ELEV.)
70	Same And: Pyroclastite has a clast-supported, Brecciated texture		17 (cont)	17		0							
71						0					R-2.5		
72				5.0/5.0	5.0/5.0	1	T, R	8	25	U			
73						0							
74						0							
75	74.9' >		18			0							
76				5.0/5.0	5.0/5.0	1	w/CaCO3 & chlorite	P, SL	6	45			
77						1	w/CaCO3 + gouge	SL, U	10	80	U	R-2.5	
78						0							
79						0							
80	79.9' >		19			0							
81	Same - And. Pyroclastite - Subangular texture w/ B-clast frags + hialoclastite text.			5.0/5.0	5.0/5.0	0				U	R-2.0-2.5	All MBs for R19	
82						0							
83						0							
84						0							

Box A

Box 9

DEPTH SCALE: 1"=2'
DRILLER: Topher

LOGGED BY: WDN
DATE: 3/25/03

SHANNON & WILSON, INC.

03-DD-234

RECORD OF DRILLHOLE

SHEET 7 OF 8

BORING NO. EK-0100
PROJECT: H.H. Dam
PROJECT NO.: 21-1-09880-001
LOCATION:

DRILLING DATE: 3/ /03
DRILLING CO.: CRUX
DRILL RIG:
DRILL METHOD: HQ

DATUM: NAD83
COLLAR ELEV.: 1160.24
INCLINATION: 90°
AZIMUTH: N/A

DEPTH SCALE (FEET)	DESCRIPTION	GRAPHIC LOG	RUN NO.	CORE RECOVERY (%)	RQD (%)	FRACTURES PER FOOT	TYPE AND SURFACE DESCRIPTION	JRC	GRAPHIC LOG	WEATHERING INDEX	STRENGTH INDEX	NOTES, WATER LEVELS, INSTRUMENTATION DRILLING FLUID	DEPTH SCALE (ELEV.)
84	And. Pyroclastic (cont)		19 (cont)			0							
85	84.9' >		20			0						3 MBs	
86				5.0/5.0	4.7/5.0	1	w/CaCO3 R,U	10	20	U	R-2.5		
87	86.9 Diffuse Basaltic Andesite: Dk. gry					1	U,SM	8	25		R-3.5		
88	87.8 Diffuse And. Pyroclastic - Brecciated text. - Sc healed fracts. w/ CaCO3, Chlorite + pyrite - Grn-gry + gry.					1	w/CaCO3 P, R	8	20				
89						1	ST, R	18	20		R-2.5		
90	89.9' Sharp/Faulted 89.9' > Porph. Andesite: Dk Gray (Basaltic Andesite)? w/ lt.gry phenocrysts		21			>1	Rubble w/ CaCO3 Slicked Faces →		XXXX XXX				
91						>4	w/Chlorite U,SL	8	45				
92				5.0/5.0	3.3/5.0	2	w/3mm CaCO3 → P,R	6	55 X	U	R-3.5		
93						2	(x2) U,R	14	20 XX 20				
94						1	P, R	6	80				
95	94.9' >		22			1	P,R	6	45				
96				5.0/5.0	3.6/5.0	3	P,SL	4	45				
97						3	U,SM	6	30				
98						>1	w/chlorite + CaCO3 ST,SM	12	30				
							w/chlorite + CaCO3 P,SL	2	45				
							w/calcite + chlorite P,R	4	45				
							" P,SL	4	40				
							w/CaCO3 U,R	14	20				
							w/Chl, Pyrite P,SL	6	60 70	U	R-3.5		
							w/Chlorite P,SM	2	10				
							w/Pyrite P,SM	6					
							w/ab breccia gouge U,SL	14	XXXX X 60			☆ Ab gouge + breccia	

DEPTH SCALE: 1"=2'
LOGGED BY: WDN
DRILLER:
DATE: 3/25/03

SHANNON & WILSON, INC.

03-DD-234

RECORD OF DRILLHOLE

BORING NO. EX-0100
PROJECT: H.H. Dam
PROJECT NO.: 21-1-09880-001
LOCATION:

DRILLING DATE: 3/ /03
DRILLING CO.: CRUX
DRILL RIG:
DRILL METHOD: HQ

DATUM: NAVD88
COLLAR ELEV.: 1160.24
INCLINATION: 90°
AZIMUTH: N/A

J - Joint, F - Fault, S - Shear, B - Bedding, F - Foliation
Description: SM - Smooth, R - Rough, SL - Slickensided
Profile: ST - Stepped, U - Undulating, P - Planar

DEPTH SCALE (FEET)	ROCK TYPE: DESCRIPTION	GRAPHIC LOG	RUN NO.	CORE RECOVERY (%)	RQD (%)	FRACTURES PER FOOT	DISCONTINUITY DATA: TYPE AND SURFACE DESCRIPTION	JRC	GRAPHIC LOG	WEATHERING INDEX	STRENGTH INDEX	NOTES, WATER LEVELS, INSTRUMENTATION DRILLING FLUID	DEPTH SCALE (ELEV.)
98	Dk gry Porph. Andesite/ Basaltic Andesite		22 (CONT)			>1	w/CaCO3 (~2mm) P,R	8	45				
99						4	P,R	8	50				
							St,R	16	40				
							w/chl, + CaCO3 → P,SL		30				
							St,R	16	20				
100	100.0' 99.9'>						R,U	10	15			R-3.5	
	green-gray w/ black phenocrysts: Porph Andesite or Aph. Andesite.		22	2.5/2.5	2.5/2.5	2	W/3mm CaCO3 (Healed) U,SL	8	80				
101						0				U	R-3.0		
102													
	102.4'>		23	1.0/1.0	1.0/1.0	1	Healed w/grout →		50			← Grouted Joint	
103							P,R	8	50	U	R-3.0		
	103.4'>		24	1.0/1.0	1.0?/1.0	1							
104									35	U	R-3.0		
	104.4'>		25	1.0/1.0	1.0/1.0?	1	N/A	N/A				← Grouted Joints	
							N/A	N/A		U	R-3.0		
105	104.9 Becomes less porph. (Basaltic And.)						N/A	N/A			R-3.5		
	105.4>		26	1.0/1.0	1.0?/1.0	N/A							
106						N/A	W/CaCO3 → U,SL Nogrout-MB?	8	90	U	R-3.5	Appears to be all MBs (some w/ slicks + CaCO3)	
106.4	106.4>		27										
107	CONCRETE			N/A	N/A	N/A				U	R-3.5 N/A		
107.4	107.4'>											BOB @ 1245 3/25/03	
	BOB @ 107.4'												
108													
109													
110													
111													
112													

Box 11

Box 12

DEPTH SCALE: 1"=2'
DRILLER:
LOGGED BY: WDN
DATE: 3/25/03

SHANNON & WILSON, INC.

RECORD OF DRILLHOLE

SHEET 1 OF 8

BORING NO. 03-DD-235
PROJECT: H.H. Dam Fish Bypass
PROJECT NO.: 21-1-09880-001
LOCATION:

DRILLING DATE: 3/17/03
DRILLING CO.: CRUX
DRILL RIG: Burley 5500
DRILL METHOD: HQ

DATUM: NAVD88
COLLAR ELEV.: 1161.36
INCLINATION: VERT
AZIMUTH: N/A

J - Joint, F - Fault, S - Shear, B - Bedding, F - Foliation
Description: SM - Smooth, R - Rough, SL - Slickensided
Profile: ST - Stepped, U - Undulating, P - Planar

DEPTH SCALE (FEET)	ROCK TYPE DESCRIPTION	GRAPHIC LOG	RUN NO.	CORE RECOVERY (%)	RQD (%)	FRACTURES PER FOOT	DISCONTINUITY DATA: TYPE AND SURFACE DESCRIPTION	JRC	GRAPHIC LOG	WEATHERING INDEX	STRENGTH INDEX	NOTES, WATER LEVELS, INSTRUMENTATION DRILLING FLUID	DEPTH SCALE (ELEV.)
	3/17/03 ← 1140AM Begin Drilling @ 10:00 AM 14" Cut												
0	Overburden: Brown, silty, sandy GRAVEL; wet;												
1			overcore w/ 14" Barrel										
1.7'	Porphyritic Andesite/And Breccia mod. strength, light gray (1.7') w/ wht. phenochrysts, scattered interstitial pyrite		N/A	N/A	N/A								
2			1	1.6/1.6	1.6/1.6	0			MB	U	R-3.0		
3	3.3' >					0							
4			2	5.0/5.0	4.6/5.0	3	slicks + pyrite U,R; w/Brn ox + green → R,U; greens staining P,R; w/Brn ox	10; 16; 12	25; 20; 50	U	R-3.0		
5						0							
6						2	w/4mm $CaCO_3$ → P,R; R,U	8; 12	20; 50				
7						1	w/slicks + $CaCO_3$ P,R	6	5				
8						1	U,R	12	55				
9	Same Andesite Breccia w/ porph. groundmass 8.3' >		3	5.0/5.0	3.45/5.0	4	w/Brn ox → U,R; U,R; U,R; St,R; St,R; U,R; St,R; U,SL; St,R	12; 12; 12; 14; 18; 18; 18; 10; 18	20; 45; 40; 40; 40; 50; 30; 50; 10; 45	U	R-3.0		
10						3							
11						5	w/Brn ox P,Sm; P,R; U,R; P,R; P,R; P,R	2; 8; 12; 6; 6; 8	45; 20; 20; 45; 30; 45; 40				
12						4							
13						0							
14	Porph And groundmass w/ Breccia frags ab interstitial & fracture fillings of pyrite 13.3' >		4	5.0/5.0	4.8/5.0		w/pyrite + $CaCO_3$ P,R	8	25	U	R-3.0		

Box 1

Box 2

DEPTH SCALE: 1"=2'
DRILLER: Mike
LOGGED BY: WDN
DATE: 3/17/03

SHANNON & WILSON, INC.

RECORD OF DRILLHOLE

SHEET 3 OF 8

BORING NO. 03-DD-235
PROJECT: H.H. Dam Fish Bypass
PROJECT NO.: 21-1-09880-001
LOCATION:

DRILLING DATE: 3/ /03
DRILLING CO.: CRUX
DRILL RIG: BURLEY 5500
DRILL METHOD: HQ

DATUM: NAVD88
COLLAR ELEV.: 1161.36
INCLINATION: VERT
AZIMUTH: N/A

Box 3

Box 4

Box 5

DEPTH SCALE (FEET)	DESCRIPTION	GRAPHIC LOG	RUN NO.	CORE RECOVERY (%)	RQD (%)	FRACTURES PER FOOT	TYPE AND SURFACE DESCRIPTION	JRC	GRAPHIC LOG	WEATHERING INDEX	STRENGTH INDEX	NOTES, WATER LEVELS, INSTRUMENTATION DRILLING FLUID	DEPTH SCALE (ELEV.)
28	28.3' >		6 (cont)			1	U, SL	10	5°		R-3.0		
	-28.5'		7				U, R	8		45			
29	-29.0'					>3	U, R	10	50		R-2.0		
30.0													
30				5.0 / 5.0	4.4 / 5.0	1	P, R	6	40	U	R-3.0		
31						1	w/gra staining St, R	16	10				
							U, R	12	45				
	-31.6' Abundant gouge						U, R	14	20				
32	-32.0					>4	U, SL	10	50		R-2.0	* Major Disc.	
	Porph. Andesite w/ breccia frags						U, SL	14	45				
							P, SL	4	20		R-3.0		
33						1	P, R	12					
	33.3' >						w/gouge @ bot of R-7	→	10				
			8								R-3.0		
34						1							
	-34.2 Pyroclastite			5.0 / 5.0	4.6 / 5.0		w/gouge + breccia R, U	12	5		R-1.5		
35	-35.0'					0				U			
	Porph. Andesite groundmass w/ abundant healed fracts w/ CaCO3 + pyrite												
36						1	R, U	10	60		R-3.0		
37	-36.8					0							
	Pyroclastite						w/gouge + breccia R, U	12	10		R-2.0		
38	-38.1' Porph. Andesite groundmass					3	" R, U	12	5				
	38.3' >								30		R-3.0		
			9				U, SL	10					
39.2						1	P, R	12	10				
40				5.0 / 5.0	4.5 / 5.0	0				U	R-3.0		
41						>2	St, R	14	40				
							St, R	18	10				
							w/gouge U, SL	12	20			Ab gouge	
42													

The Pyroclastite zones may be breccia fragments or ?

DEPTH SCALE: 1"=2'
DRILLER: Mike

LOGGED BY: WDH
DATE: 3/ /03

SHANNON & WILSON, INC.

RECORD OF DRILLHOLE

SHEET 4 OF 8

BORING NO. 03-DD-235
PROJECT: H.H. Dam Fish Bypass
PROJECT NO.: ZH-09880-001
LOCATION:

DRILLING DATE: 3/ /03
DRILLING CO.: CRUX
DRILL RIG: BURLEY 5500
DRILL METHOD: HQ

DATUM: NAVD88
COLLAR ELEV.: 1161.36
INCLINATION: VERT
AZIMUTH: N/A

ROCK TYPE: J - Joint, F - Fault, S - Shear, B - Bedding, F - Foliation
Description: SM - Smooth, R - Rough, SL - Slickensided
Profile: ST - Stepped, U - Undulating, P - Planar

DEPTH SCALE (FEET)	DESCRIPTION	GRAPHIC LOG	RUN NO.	CORE RECOVERY (%)	RQD (%)	FRACTURES PER FOOT	DISCONTINUITY DATA: TYPE AND SURFACE DESCRIPTION	JRC	GRAPHIC LOG	WEATHERING INDEX	STRENGTH INDEX	NOTES, WATER LEVELS, INSTRUMENTATION DRILLING FLUID	DEPTH SCALE (ELEV.)
42			9 core			2	w/ab pyrite CaCO3 U,Su	10	70				
43	43.3' >					1	" ST,R	18	55				
44	Porph Andesite		10			1	U,SL	8	50				
							P,R	12	60				
45				5.0/5.0	4.6/5.0	1	w/gouge (2mm) → P,SL	10	45				
46						2	P,Su	6	20/45	U	R-3.0		
47						>3	P,Su P,SM	6	50 40	45			
48	48.3 48.3' >					>0	w/pyrite+CaCO3 U,R	12					
	Abundant Pyrite +CaCO3-healed fracts		11			0					R-2.5	— Appears same but will scrape w/knife	
49	49.1												
50				5.0/5.0	4.0/5.0	2				U			
51						3	U,SL P,R U,R	12 6 8	75 60 20		R-3.0		
52						0	U,R U,R	12 10	30 10				
53	53.3' >					1	w/CaCO3 St,R	12	10				
54	Same porph Andes		12	5.0/5.0	3.6/5.0	0				U	R-3.0		
55						0							
56							U,R w/Breccia P,R	10 8	40 60				

Box 5
Box 6

DEPTH SCALE: 1"=2'
LOGGED BY: WDH
DRILLER: Mike
DATE: 3/ /03

SHANNON & WILSON, INC.

RECORD OF DRILLHOLE

SHEET 5 OF 8

BORING NO. 03-DD-235
PROJECT: H.H. Dam Fish Bypass
PROJECT NO.: 21-1-09880-001
LOCATION:

DRILLING DATE: 3/ /03
DRILLING CO.: CRUX
DRILL RIG: BURLEY 5500
DRILL METHOD: HQ

DATUM: NAVD88
COLLAR ELEV.: 1161.36
INCLINATION: VERT.
AZIMUTH: N/A

ROCK TYPE: J - Joint, F - Fault, S - Shear, B - Bedding, F - Foliation
Description: SM - Smooth, R - Rough, SL - Slickensided
Profile: ST - Stepped, U - Undulating, P - Planar

DEPTH SCALE (FEET)	DESCRIPTION	GRAPHIC LOG	RUN NO.	CORE RECOVERY (%)	RQD (%)	FRACTURES PER FOOT	TYPE AND SURFACE DESCRIPTION	JRC	GRAPHIC LOG	WEATHERING INDEX	STRENGTH INDEX	NOTES, WATER LEVELS, INSTRUMENTATION DRILLING FLUID	DEPTH SCALE (ELEV.)
56			12 (CONT)			3	w/Br staining → St,R / ST,R	18 / 20	90	45			
57						3	w/ab breccia + gouge (soft) U,R	16		20			
							St,R	14	70	U	R-3.0		
58						2	w/pyrite + CaCO3 P,R	8	40				
58.3	58.3' >		13				w/chlorite + pyrite P,R	6	5				
59						1	w/Breccia U,SL	10	65				
	59.5 Andesite Breccia: Groundmass-supported porph. groundmass. Clasts have slightly lower strength (2.5)			5.0/5.0	5.0/5.0	1	U,SL	14	30	U	R-3.0		
61						1	w/CaCO3 (2mm) + Pyrite P,R	6	20				
62						1	w/CaCO3 P,SL	4	50				
63						2	w/ab CaCO3 (x2) P,R	8	35/30				
	63.3' > Same - And. Breccia. Increasing fragment concentration. Clast-strength = same as above.		14										
64						0							
65				5.0/5.0	4.8/5.0	>1	w/CaCO3 " Pyrite " R,U / U,SL	14 / 8		U	R-3.0		
66						1							
67						2	w/Pyrite + CaCO3 P,R / U,R	6 / 18	45/30				
68						0							
68.3'	68.8' >		15										
69				5.0/5.0	5.0/5.0	0	U,SL	12	70	U	R-3.0		
70													

Box 6
Box 7
Box 8

DEPTH SCALE: 1"=2'
DRILLER: Mike
LOGGED BY: WDN
DATE: 3/ /03

SHANNON & WILSON, INC.

RECORD OF DRILLHOLE

SHEET 6 OF 8

BORING NO. 03-DD-235
PROJECT: HH: Dam Fish Bypass
PROJECT NO.: 21-1-09580-001
LOCATION:

DRILLING DATE: 3/ /03
DRILLING CO.: CRUX
DRILL RIG: BURLEY 5500
DRILL METHOD: HQ

DATUM: NAVD88
COLLAR ELEV.: 1161.36
INCLINATION: VERT
AZIMUTH: N/A

ROCK TYPE: J - Joint, F - Fault, S - Shear, B - Bedding, F - Foliation
Description: SM - Smooth, R - Rough, SL - Slickensided
Profile: ST - Stepped, U - Undulating, P - Planar

DEPTH SCALE (FEET)	DESCRIPTION	GRAPHIC LOG	RUN NO.	CORE RECOVERY (%)	RQD (%)	FRACTURES PER FOOT	DISCONTINUITY DATA: TYPE AND SURFACE DESCRIPTION	JRC	GRAPHIC LOG	WEATHERING INDEX	STRENGTH INDEX	NOTES, WATER LEVELS, INSTRUMENTATION DRILLING FLUID	DEPTH SCALE (ELEV.)
70	High-Angle (>50) Contact Andesite Breccia w/ Aphanitic groundmass. Appears to be subaqueous texture (Pyroclastite)		15 (cont)			2			75	← Heated contact w/ $CaCO_3$ + some soft Breccia/gouge (~7-8 mm wide)	R-2.5-3.0		
71						1	U,R	12	45	U			
72						0							
73						>1	w/ $CaCO_3$ + ab breccia + gouge	U,R	12	80		MB rubble	
74	73.3' Same And. Breccia w/ a subaqueous texture, R-3.0 strength, ab. chaotic fractsw/ Calcite infillings, gra-gry		16	(4.7) 5.0/5.0	(4.7) 5.0/5.0	1	P,SL	6	60				
75						1	w/ $CaCO_3$	U,SL	8	70	U	R-3.0-2.5	
76	Box 8					2	"	U,SL	8	80			
77								U,SL	10	35 wax			
78						1		St,U	10	85			
78.3'	78.3' Increasing Pyroclastic Texture, but welded R-2.0-2.5 (scrapes with knife), gra-gry color		17	5.0/5.0	4.2/5.0	1	w/ $CaCO_3$ + Pyrite	R,U	12	65		Stop Drilling @ 78.3 on 3/17/03 @ 1700	
79						2	w/ Breccia + gouge	U,SL	10	85			
80							"	P,SL	6	70	U	R-2.5	
81						1	w/ $CaCO_3$	St,R	16	60		★ Very fractured w/ slicks - soft rock w/ propensity to deteriorate + generate gouge along fractures	
82	Box 9					1		U,SL	10	80			
83						2	w/ gouge + Breccia (~2-4 mm)	P,SL	8	55			
83.3'	83.3' >		18	5.0/5.0	4.1/5.0			St,SL	12	45			
84								U,SL	14	70	U	R-2.0	

DEPTH SCALE: 1" = 2'
LOGGED BY: WDN
DRILLER: Mike
DATE: 3/ /03

SHANNON & WILSON, INC.

RECORD OF DRILLHOLE

SHEET 7 OF 8

BORING NO. 03-DD-235
PROJECT: H.H. Dam Fish Bypass
PROJECT NO.: 21-1-09880-001
LOCATION:

DRILLING DATE: 3/ /03
DRILLING CO.: CRUX
DRILL RIG: BURLEY 5500
DRILL METHOD: HQ

DATUM: NAVD88
COLLAR ELEV.: 1161.36
INCLINATION: VERT
AZIMUTH: N/A

DEPTH SCALE (FEET)	DESCRIPTION	GRAPHIC LOG	RUN NO.	CORE RECOVERY (%)	RQD (%)	FRACTURES PER FOOT	TYPE AND SURFACE DESCRIPTION	JRC	GRAPHIC LOG	WEATHERING INDEX	STRENGTH INDEX	NOTES, WATER LEVELS, INSTRUMENTATION DRILLING FLUID	DEPTH SCALE (ELEV.)
84	Same – Pyroclastic w/ Breccia texture		18 (CONT)			0							
85						1	w/gouge U,SL	10	75	U	R-2.0	w/some R-1.0 gouge zones towards bottom of Run	
86						1	w/gouge + breccia U,SL	12	70				
87						2	" U,SL	10	65 XXX				
88						2	" U,SL	12	75				
88.3	Same – 88.3' >						" U,SL	10	60				
							" U,R	14	70			@ Ab. gouge (~6-10mm)	
89			19			1	P,SL	4	80				
90				5.0/5.0	4.1/5.0	3	P,SL	4	65				
							w/Breccia + Brn stain → U,R	12	60	U	R-2.0		
91						1	w/ab gouge (~2-4mm) U,SL	10	30				
							U,R	12	70				
92						0					R-2.5		
93	Same – 93.3' >					0							
94			20	1.1/1.1	1.1/1.1	>1				U	R-2.5		
	Same – 94.4'?		21				Ab Brecciated Rubble → R,U	8	XXX	50		Blocked off @ 94.4'	
95							→ R,U	12	5 XXX	80 – MB?			
						>4	STR	16	45				
96				3.9/3.9	1.7/3.9		w/calcite U,SL	10	50	U	R-2.0		
						1							
97							w/calcite R,U	12	30				
							P,R	8	50				
						3	R,U	12	45				
							P,R	6	60				
98							P,SL	2	70			* w/well developed gouge w/pyrite (~2-4mm)	

DEPTH SCALE: 1" = 2'
DRILLER: Mike

LOGGED BY: WDN
DATE: 3/ /03

SHANNON & WILSON, INC.

RECORD OF DRILLHOLE

SHEET 8 OF 8

BORING NO. 03-DD-235
PROJECT: H.H. Dam Fish Bypass
PROJECT NO.: 21-1-09880-001
LOCATION:

DRILLING DATE: 3/ /03
DRILLING CO.: CRUX
DRILL RIG: BURLEY 5500
DRILL METHOD: HQ

DATUM: NAVD88
COLLAR ELEV.: 1161.36
INCLINATION: VERT
AZIMUTH: N/A

J - Joint, F - Fault, S - Shear, B - Bedding, F - Foliation
Description: SM - Smooth, R - Rough, SL - Slickensided
Profile: ST - Stepped, U - Undulating, P - Planar

DEPTH SCALE (FEET)	ROCK TYPE DESCRIPTION	GRAPHIC LOG	RUN NO.	CORE RECOVERY (%)	RQD (%)	FRACTURES PER FOOT	DISCONTINUITY DATA TYPE AND SURFACE DESCRIPTION	JRC	GRAPHIC LOG	WEATHERING INDEX	STRENGTH INDEX	NOTES, WATER LEVELS, INSTRUMENTATION DRILLING FLUID	DEPTH SCALE (ELEV.)
98	Same - Breccia Texture, but Pyroclastite 98.3 >		21 (Cont)			1	w/CaCO3 U,SL	12	60				
99			22	5.0/5.0	5.0/5.0	2	" U,R	12	65	U	R-2.5		
100						1	P,R	6	55				
101						1	U,R	14	60				
102						1	U,R	16	55				
103	103.3 >					0							
104	104.3' >		23	1.0/1.0	1.0/1.0	0				U	R-2.5		
105	105.3 GROUT (Fine-Grained) 105.3' >		24	1.0/1.0	0.75/1.0	2	w/grout → St,R	14	45	U	R-2.5		
							U,R	18	10				
106	CONCRETE (fine-gravelly)	105.6	25	1.0/1.0	1.0/1.0 ?	>1	2-4mm Grout in fracture			U	N/A	← Grout shows healed displacement (hardening during grouting?)	
	Pyroclastite 106.3 >	106.0									R-2.5		
107	Same - 107.3' >		26	1.0/1.0	1.0/1.0	0				U	R-2.5	Note: RQD is high, since fractures are grouted/sealed	
108			27	1.0/1.0	1.0/1.0	>2			85	U	R-2.5		
109	108.5' GROUT 108.9' 108.3' >		28	1.0/1.0	1.0/1.0 ?	2	Grout →		100	U	R-2.5-3.0	concrete	
	109.3' >						Grout						
110	109.8' CONCRETE 110.3' >		29	1.0/1.0	1.0/1.0 ?	N/A				U	R-2.5 / N/A	Grout / CONCRETE	
111	EOB @ 110.3' 3/18/03 @ 1205												
112													

Box 10 — 98.3
Box 11 — 107.3'
Box 12 — 110.3'

DEPTH SCALE: 1"=2'
DRILLER: Mike
LOGGED BY: WDN
DATE: 3/ /03

SHANNON & WILSON, INC.

110.3
109.8
/ 510

RECORD OF DRILLHOLE

SHEET 2 OF 8

BORING NO. 03-DD-235
PROJECT: H.H. Dam Fish Bypass
PROJECT NO.: 21-1-09880-001
LOCATION:

DRILLING DATE: 3/17/03
DRILLING CO.: CRUX
DRILL RIG: BURLEY 5500
DRILL METHOD: HQ

DATUM: NAVD88
COLLAR ELEV.: 1161.36
INCLINATION: VERT
AZIMUTH: N/A

Box 2

Box 3

DEPTH SCALE (FEET)	DESCRIPTION	GRAPHIC LOG	RUN NO.	CORE RECOVERY (%)	RQD (%)	FRACTURES PER FOOT	TYPE AND SURFACE DESCRIPTION	JRC	GRAPHIC LOG	WEATHERING INDEX	STRENGTH INDEX	NOTES, WATER LEVELS, INSTRUMENTATION DRILLING FLUID	DEPTH SCALE (ELEV.)
14	Less Breccia frags Porph. Andesite: Lt gray w/wht. phenocrysts		4 cont			1							
15						1	w/Pyrite CaCO3 P,SL	8	30			3 Ab healed fractures w/Pyrite + CaCO3 / 15.4-16.0'	
16						1	w/Brx Ox P,R	8	60				
17						0	w/CaCO3+ Pyrite U,SM	8	40				
18	18.5' >					1							
19	18.8'-19.5' Pyroclastite Highly fractured w/soft gouge		5			>2	w/py-rite+ CaCO3 St,R	18	50		R-3.0	18.8	
							w/Abundant gouge + breccia U,SL	10	45		R-2.0	19.5 Soft highly fract.	
							R,U	12	80				
20	Porph Andesite w/ very scattered breccia fragments.			5.0' / 5.0	4.5' / 5.0	2	R,U	12	30		R-3.0		
21						2	w/pyrite + CaCO3 U,R	12	80	U			
							U,R	12	80				
22						1							
23						1	St,R	16	40				
							P,R	8	45				
	23.3' >											1310-1400 Pumping out the mud (too thick)	
24			6			2	w/Ab CaCO3 +Pyrite U,SL	8	50				
							U,R	14	40		R-3.0		
25	-25.1 Pyroclastite seam (soft)			5.0 / 5.0	4.9 / 5.0	2						-25.1	
	-25.6						w/gouge breccia U,R	12	x50	U	R-1.5	-25.6	
26						0	U,R	12	x50		R-3.0		
27						1	w/ab Pyrite P,R	8	50				
28													

DEPTH SCALE: 1"-2'
LOGGED BY: WDN
DRILLER: Mike
DATE: 3/17/03

SHANNON & WILSON, INC.

03-DD-256

RECORD OF DRILLHOLE

SHEET 1 OF 9

BORING NO. EX 0300
PROJECT: Howard A. Hanson Dam
PROJECT NO.: 21-09317-
LOCATION: N=102503.23 E=1763421.21

DRILLING DATE: 3/10/03
DRILLING CO.: CRUX
DRILL RIG:
DRILL METHOD:

DATUM: NAVD88
COLLAR ELEV.: -1165.51
INCLINATION: VERTICAL
AZIMUTH: N/A

ROCK TYPE: J - Joint, F - Fault, S - Shear, B - Bedding, F - Foliation
Description: SM - Smooth, R - Rough, SL - Slickensided
Profile: ST - Stepped, U - Undulating, P - Planar

DEPTH SCALE (FEET)	DESCRIPTION	GRAPHIC LOG	RUN NO.	CORE RECOVERY (%)	RQD (%)	FRACTURES PER FOOT	DISCONTINUITY DATA: TYPE AND SURFACE DESCRIPTION	JRC	GRAPHIC LOG	WEATHERING INDEX	STRENGTH INDEX	NOTES, WATER LEVELS, INSTRUMENTATION DRILLING FLUID	DEPTH SCALE (ELEV.)
	Overburden => silty, sandy GRAVEL; moist; (Hf) GM.	- Top of Bedrock											
1	Porphyritic Andesite: Mod. strength, gray with lt. gray inclusions/phenochrysts (~10%),		12" Over Drill FOR MONUMENT - CORE NOT LOGGED										
2	2.1'					0	Rubble		30°				
			1	1.1/1.2	0.7/1.2		w/Brn ox ST,SM	16		U	R3		
3	3.3'					2	w/Brn ox U,R	14	40°				
4			2			2	w/Clay Gouge P,R	8	MB 40°				
							U,Sm	8	35				
							w/Brn ox U,R	16					
5				4.9/5.0	4.5/5.0	0				U	R3.0		
6						1	w/faint slicks → U,R	16	52° 50° Healed				
							w/Brn ox UR	16	45° Healed				
7						2	U,R	14	60°				
							w/Brn ox U,R	14	48°				
8	8.3'					2			MB				
			3										
9						0							
10						0				U	R3.0		
				4.9/5.0	4.15/5.0								
11						2	w/CaCO3 U,R	8	20°				
							U,R	10	50°				
12	12.3'					>2	Rubble		35°				
	Andesite Breccia:						P,R	6	35				
							w/Brn ox U,R	18					
13	13.3'					0			MB				
			4										
14													

DEPTH SCALE: 1"=2'
DRILLER:
LOGGED BY: WDW
DATE: 3/10/03

SHANNON & WILSON, INC.

03-DD-236

RECORD OF DRILLHOLE

SHEET 2 OF 9

BORING NO. EX0300
PROJECT: HH, Dam Fish Bypass
PROJECT NO.: 21-1-09317
LOCATION:

DRILLING DATE: 3/10/03
DRILLING CO.: CRUX
DRILL RIG:
DRILL METHOD:

DATUM: NAVD88
COLLAR ELEV.: 1165.51
INCLINATION: VERT
AZIMUTH: N/A

Core Not Extracted per Retrieval Guide

DEPTH SCALE (FEET)	DESCRIPTION	GRAPHIC LOG	RUN NO.	CORE RECOVERY (%)	RQD (%)	FRACTURES PER FOOT	TYPE AND SURFACE DESCRIPTION	JRC	GRAPHIC LOG	WEATHERING INDEX	STRENGTH INDEX	NOTES, WATER LEVELS, INSTRUMENTATION DRILLING FLUID	DEPTH SCALE (ELEV.)
14			4 (Cont)			1	w/CaCO3 P,R	6	35				
15	Andesite Breccia						P,R	10	45 45				
				5.0/5.0	4.6'/5.0	2	w/Pyrite St,R	16		U	R3.0		
16	@ 15.9' — Less Breccia Inclusions More like Porphyritic Andesite					1	w/Clayey Gouge + Breccia U,R + Pyrite	14	35°			Polymer Mud (CONTD)	
17						0							
18	18.3'					1	w/Brn clayey gouge U,R	16	60°				
19	Porphyritic Andesite w/ Pyrite + calcite filled/healed fractures, gray w/ light gray phenocrysts		5			1	w/Chlorite P,R	8	MB 65 25				
							P,SI	10					
20							U,R	10	45 MB	U	R3.0		
				5.3/5.0	4.9/5.0	1							
21													
							U,R	10	45				
22						1	U,SM	12	20°				
23						1	w/gouge ST,R	18	75				
	23.3'		6						MB	MB			
24						1	P,R	8					
									55°				
25				5.0/5.0	4.1/5.0	2	w/slicks P,R + CaCO3 + Pyrite	6	55	U	R-3.0		
							Some gouge → U,R → P,R	12					
26						2		8	70 10				
27						1	P,R	10	35				
28						0							

Box 1

DEPTH SCALE: 1"=2'
LOGGED BY: WBW
DRILLER:
DATE: 3/10/03

SHANNON & WILSON, INC.

03-DD-236

RECORD OF DRILLHOLE

SHEET 3 OF 9

BORING NO. EX0300
PROJECT: HH Dam Fish Bypass
PROJECT NO.: ZH-0857-
LOCATION:

DRILLING DATE: 3/10/03
DRILLING CO.: CRUX
DRILL RIG:
DRILL METHOD:

DATUM: NAVD88
COLLAR ELEV.: -1165.51
INCLINATION: VERT
AZIMUTH: N/A

DEPTH SCALE (FEET)	DESCRIPTION	GRAPHIC LOG	RUN NO.	CORE RECOVERY (%)	RQD (%)	FRACTURES PER FOOT	TYPE AND SURFACE DESCRIPTION	JRC	GRAPHIC LOG	WEATHERING INDEX	STRENGTH INDEX	NOTES, WATER LEVELS, INSTRUMENTATION DRILLING FLUID	DEPTH SCALE (ELEV.)
28.3	28.3' >		6 Cont										
28			7				P,R	8	NG				
29	Porphyritic Andesite, Cont.			5.0/5.0	4.8/5.0	2	U,SL	8	65				
30						1	w/ab Pyrite chlorite & gouge <1/2" U,SM	10	10°	U	R=3.0	← 4in of Pyrite in vein II to fracture	
31						1	U,SM	8	25°				
32						>1	w/Brn ox Rubble/ Breccia P,SM	8	45 XXXX			← Large Disc. w/ Breccia/ gouge + Brn ox	
33						1			75° ← Healed				
	33.3' >		8				P,R	10	55°				
34	Same ~15% lt.grey Inclusions					1	w/CaCO3 U,R	14	40°				
35				5.1/5.0	5.0/5.0	0				U	R-3.0		
36						1	w/some gouge U,SM	6	15°				
37						>1			MR XXX MB				
38	38.3' >					1	w/CaCO3 P,SL	10	40 MB				
38.3'			9										
39	Same Porphyritic Andesite			5.0'/5.0	4.9"/5.0	1	w/1/8" CaCO3 P,Sm	6	50	U	R-3.0		
40						2	w/Slicks+ CaCO3 U,R	12	50				
41						1	U,R P,R	6	60 30				
42							U,R	1±					

Box 2

Box 3

DEPTH SCALE: 1"=2'
LOGGED BY: WEW
DRILLER:
DATE: 3/10/03

SHANNON & WILSON, INC.

03-DD-236

RECORD OF DRILLHOLE

SHEET 4 OF 9

BORING NO. EXO300
PROJECT: HH Dam Fish Bypass
PROJECT NO.: 21-1-08514-
LOCATION:

DRILLING DATE: 3/10/03
DRILLING CO.: CRUX
DRILL RIG:
DRILL METHOD:

DATUM: NAVD88
COLLAR ELEV.: 1165.51
INCLINATION: VERT
AZIMUTH: N/A

ROCK TYPE: J - Joint, F - Fault, S - Shear, B - Bedding, F - Foliation
Description: SM - Smooth, R - Rough, SL - Slickensided
Profile: ST - Stepped, U - Undulating, P - Planar

DEPTH SCALE (FEET)	DESCRIPTION	GRAPHIC LOG	RUN NO.	CORE RECOVERY (%)	RQD (%)	FRACTURES PER FOOT	DISCONTINUITY DATA: TYPE AND SURFACE DESCRIPTION	JRC	GRAPHIC LOG	WEATHERING INDEX	STRENGTH INDEX	NOTES, WATER LEVELS, INSTRUMENTATION DRILLING FLUID	DEPTH SCALE (ELEV.)
42			9 cont.			1	P, SL	6	70°				1123.51
43	Andesite Porphyry lt. gray 43.3' >		10	4.3/4.3	4.0/4.3		U, ST	10	65	U	R-3.0	Ghost Breccia clast w/Baked/cooked margins	
44									40				
45							U, SM	8					
46													
47													
47.6	47.6' >		11	0.8/0.7	0.6/0.7	5	w/Gouge → P, R → P, SL	6	20	U	R-3.0	Blocked OFF - Gouge zone along 45° (Green Gray)	
48	Same 48.3' >		12				Bunch → P, R → ST, R ST, R	10 18 18	60 70 MB		Rubble (MB)		
49													
50	Andesite Porphyry			5.0'/5.0	5.0'/5.0				MB	U	R-3.0		
51									MB				
52													
53	53.3' >		13						MB				
54	Same			5.0/5.0	5.0/5.0					U	R-3.0		
55													
56							U, R	10	60°				

Box 3
Box 4

DEPTH SCALE: 1"=2'
LOGGED BY: WDH
DRILLER:
DATE: 3/10/03

SHANNON & WILSON, INC.

03-DD-236

RECORD OF DRILLHOLE

SHEET 5 OF 9

BORING NO. EX0300
PROJECT: HH Dam Fish Bypass
PROJECT NO.: ZH-0937-
LOCATION:

DRILLING DATE: 3/10/03
DRILLING CO.: CRUX
DRILL RIG:
DRILL METHOD:

DATUM: NAVD88
COLLAR ELEV.: 1165.51
INCLINATION: VERT
AZIMUTH: N/A

ROCK TYPE: J - Joint, F - Fault, S - Shear, B - Bedding, F - Foliation
Description: SM - Smooth, R - Rough, SL - Slickensided
Profile: ST - Stepped, U - Undulating, P - Planar

DEPTH SCALE (FEET)	DESCRIPTION	GRAPHIC LOG	RUN NO.	CORE RECOVERY (%)	RQD (%)	FRACTURES PER FOOT	DISCONTINUITY DATA: TYPE AND SURFACE DESCRIPTION	JRC	GRAPHIC LOG	WEATHERING INDEX	STRENGTH INDEX	NOTES, WATER LEVELS, INSTRUMENTATION DRILLING FLUID	DEPTH SCALE (ELEV.)
56	Andesite porphyry		13 (cont.)										
57						1	U, SM	8	20°	U	R-3.0		
58						1	w/some gouge P, R	6	40° NB				
	58.3' >												
59			14			2	U, SM	8	35				
	Same						U, SL	16	75				
60				4.9/5.0	3.5/5.0	0				U	R-3.0	Ghost Breccia frag.	
61						2	U, SM	6	45				
							w/pos. gouge U, SM	6	45				
62						1	P, R	8	50			w/ 1/4" lense of Chlorite	
63						>1	U, R	16	65				
	63.3' >		15										
64	Andesite Porphyry					0							
				5.0/5.0	4.0/5.0								
65	Scattered gravel-sized inclusions					0				U	R-3.0		
							U, SM	10	45				
66						2	U, SM	10	45			w/some Breccia gouge	
26.6													
67						1	U, R	12					
68						1	Pyrite w/Box OK U, R	14	45			MB Rubble	
	68.3' >		End of Day										
	Drilling @ 0730 3/11/03		16				U, SL		60				
69	Andesite Porphyry w/increasing mafic phenocrysts					2	R, SL	12	60°				
							P, R	8	45	U	R-3.0		
70						2	P, R	8	45				

DEPTH SCALE: 1"=2'
LOGGED BY: WW
DRILLER:
DATE: 3/10/03

SHANNON & WILSON, INC.

03-DD-236

RECORD OF DRILLHOLE

SHEET 6 OF 9

BORING NO. EK0300
PROJECT: HH Dam Fish Bypass
PROJECT NO.: 21-409317
LOCATION:

DRILLING DATE: 3/11/03
DRILLING CO.: Cruk
DRILL RIG:
DRILL METHOD:

DATUM: NAVD88
COLLAR ELEV.: 1165.51
INCLINATION: VERT
AZIMUTH: N/A

DEPTH SCALE (FEET)	DESCRIPTION	GRAPHIC LOG	RUN NO.	CORE RECOVERY (%)	RQD (%)	FRACTURES PER FOOT	TYPE AND SURFACE DESCRIPTION	JRC	GRAPHIC LOG	WEATHERING INDEX	STRENGTH INDEX	NOTES, WATER LEVELS, INSTRUMENTATION DRILLING FLUID	DEPTH SCALE (ELEV.)
70	Andesite Porphyry (CONT)		16 CONT	(4.7)									
71				4.7/4.7	3.9/4.7	1	w/slicks U,SL	8					
72						0							
73	73.0' > 73.3 '		17			1	U,SL	12	45				
74						1	w/pyrite+CaCO3 P,SL	8	70°				
75				4.9/4.9	4.7/4.9	0				U	R-3.0		
76						1	R,U	18	70				
77	6.6'					2	w/gouge Breccia → U,SM ↘ P,R	10 / 6	10 / 20				
78	77.9' >		18			0						-80.1' = inclusion core size	
79				2.9/2.9	2.9/2.9	1	U,SL	10	45° / 40 ← Healed	U	R-3.0		
80						0						-inclusion (2"x1")	
81	Core Loss 80.8' > 81.1'	X	19			1	U,SL	12	10			-w/spoon Marks	
82				2.2/2.5	2.1/2.5	0				U	R-3.0		
83	83.3' >					3	w/some Breccia U,SL U,SL w/CaCO3 Pyrite P,SL	8 14 5	35° 45 0				
84	83.9 - Becoming Darker Grey		20				(KZ) R,U	14	45 / 60				

Box 6 (cont.)
Box 7

DEPTH SCALE: 1"=2'
DRILLER:
LOGGED BY: WSW
DATE: 3/11/03

SHANNON & WILSON, INC.

03-DD-236

RECORD OF DRILLHOLE

SHEET 7 OF 9

BORING NO. EX0300
PROJECT: HH Dam Fish Bypass
PROJECT NO.: 21-1-09317
LOCATION:

DRILLING DATE: 3/11/03
DRILLING CO.: CRUX
DRILL RIG:
DRILL METHOD:

DATUM: NAVD88
COLLAR ELEV.: -1165.51
INCLINATION: VERT
AZIMUTH: N/A

J - Joint, F - Fault, S - Shear, B - Bedding, F - Foliation
Description: SM - Smooth, R - Rough, SL - Slickensided
Profile: ST - Stepped, U - Undulating, P - Planar

DEPTH SCALE (FEET)	ROCK TYPE: DESCRIPTION	GRAPHIC LOG	RUN NO.	CORE RECOVERY (%)	RQD (%)	FRACTURES PER FOOT	DISCONTINUITY DATA: TYPE AND SURFACE DESCRIPTION	JRC	GRAPHIC LOG	WEATHERING INDEX	STRENGTH INDEX	NOTES, WATER LEVELS, INSTRUMENTATION DRILLING FLUID	DEPTH SCALE (ELEV.)
84	Andesite Porphery (darker @ 83.9')		20 CONT			2							
85						0							
86				5.0/5.0	4.7/5.0	0	MB @ lt. gry. seam of same hardness		MB	U	R-3.0		
87						2	R, U w/Breccia + gouge R, U No Slicks P, R	12 12 8	5 X X 60 X X 60 X			Rubble	
88	88.3' >		21			1							
89						0							
90				5.0/5.0	5.0/5.0	0				U	R-3.0		
91						0							
92						1	w/Breccia/gouge P, R	8	60				
93	93.3' >		22			1	R, U	12	35°				
94						0							
95				5.0/5.0	4.5/5.0	0				U	R-3.0		
96						0							
97	Grades to green Andesite porphery @ 97.0'					2	P, SL w/$CaCO_3$ P, SL	6 4	50° 45				
98													

Box 7 (86.5)
Box 8 (95.8)
Box 9

DEPTH SCALE: 1"=2'
DRILLER:
LOGGED BY: WDN
DATE: 3/11/03

SHANNON & WILSON, INC.

03-DD-236

RECORD OF DRILLHOLE

SHEET 8 OF 9

BORING NO. EX0300
PROJECT: HH DAM FISH BYPASS
PROJECT NO.: 21-09317
LOCATION:

DRILLING DATE: 3/11/03
DRILLING CO.: CRUX
DRILL RIG:
DRILL METHOD:

DATUM: NAVD88
COLLAR ELEV.: 1165.51
INCLINATION: VERT
AZIMUTH: N/A

J - Joint, F - Fault, S - Shear, B - Bedding, F - Foliation
Description: SM - Smooth, R - Rough, SL - Slickensided
Profile: ST - Stepped, U - Undulating, P - Planar

DEPTH SCALE (FEET)	ROCK TYPE DESCRIPTION	GRAPHIC LOG	RUN NO.	CORE RECOVERY (%)	RQD (%)	FRACTURES PER FOOT	DISCONTINUITY DATA TYPE AND SURFACE DESCRIPTION	JRC	GRAPHIC LOG	WEATHERING INDEX	STRENGTH INDEX	NOTES, WATER LEVELS, INSTRUMENTATION DRILLING FLUID	DEPTH SCALE (ELEV.)
98	Green gray Andesite porphery 98.3' >		22 (cont)			1	U,R	12	75				
			23										
99				2.5/2.5	2.5/2.5	0				U	R-3.0		
100	- Becomes gray (grades) @100'					1	U,SL	4	55				
	- Scattered healed fractures 100.8' >		24										
101			24			1	P, SL	6	55				
102				2.5/2.5	2.5/2.5	0	w/CaCO3 P,SL	6	45	U	R-3.0		
103	103.3' >					2	ST,R	16	50				
			25										
104						1	P,R	6	40				
105				5.0/5.0	5.0/5.0	1	U,R	12	55	U	R-3.0		
106						1	S,R	12	45				
107	- Grading to Andesite Breccia @ ~108.0'					0							
108	Andesite Breccia 108.3 > Matrix/groundmass supported c-sa → gr size clasts, No strength diff., And. Porphery groundmas					1	U,R	10	35			1031	
			26										
109						0							
110				5.0/5.0	5.0/5.0	0				U	R-3.0		
111						0							
112						0							

Box 9

04.5

Box 10

DEPTH SCALE: 1"=2'
DRILLER:
LOGGED BY: WEN
DATE: 3/11/03

SHANNON & WILSON, INC.

RECORD OF DRILLHOLE

SHEET 9 OF 9

03-DD-236

BORING NO. EX0300
PROJECT: HH Dam Fish Bypass
PROJECT NO.: 21-1-09817
LOCATION:

DRILLING DATE: 3/11/03
DRILLING CO.: CRUX
DRILL RIG:
DRILL METHOD:

DATUM: NAVD88
COLLAR ELEV.: 1165.51
INCLINATION: VERT
AZIMUTH: N/A

J - Joint, F - Fault, S - Shear, B - Bedding, F - Foliation
Description: SM - Smooth, R - Rough, SL - Slickensided
Profile: ST - Stepped, U - Undulating, P - Planar

DEPTH SCALE (FEET)	ROCK TYPE: DESCRIPTION	GRAPHIC LOG	RUN NO.	CORE RECOVERY (%)	RQD (%)	FRACTURES PER FOOT	DISCONTINUITY DATA: TYPE AND SURFACE DESCRIPTION	JRC	GRAPHIC LOG	WEATHERING INDEX	STRENGTH INDEX	NOTES, WATER LEVELS, INSTRUMENTATION DRILLING FLUID	DEPTH SCALE (ELEV.)
	LOOK FOR TUNNEL												
112													
113	Grades back to Andesite Porphery @113.0' 113.3					1	w/some Spin marks U,R	12	20			1048	
			27										
114				2.5/2.5	2.5/2.5	1	P,R	8	30	U	R-3.0		
115	115.0' Darker Zone 115.4					0							
116	115.9' Andesite Breccia 115.8'		28	1.3/1.3	/1.3	1	Sm,U - Possible Disc. @ 116.3 ⇒ Gouge and breccia @ CONC/Andesite contact.	8	40			1100	
	116.3' CONCRETE w/some Grout 116.5'												
117	Driller notes Drilling change @ 117.1											1100 / 1110	
										wood			
118	BOB @ 117.1												
119													
120													
121													

Box 10

Box 11

17.1

DEPTH SCALE: 1" = 2'
DRILLER:

LOGGED BY: WDN
DATE: 3/11/03

SHANNON & WILSON, INC.

RECORD OF DRILLHOLE

P2-0400

BORING NO. 03-DD-237
PROJECT: H.H. Dam
PROJECT NO.: 21-1-09880-001
LOCATION:

DRILLING DATE: 4/7/03
DRILLING CO.: CRUX
DRILL RIG:
DRILL METHOD: HQ-3

DATUM: NAVD88
COLLAR ELEV.: 1153.32
INCLINATION: 87°
AZIMUTH: 202

SHEET 1 OF 10

J - Joint, F - Fault, S - Shear, B - Bedding, F - Foliation
Description: SM - Smooth, R - Rough, SL - Slickensided
Profile: ST - Stepped, U - Undulating, P - Planar

DEPTH SCALE (FEET)	DESCRIPTION	GRAPHIC LOG	RUN NO.	CORE RECOVERY (%)	RQD (%)	FRACTURES PER FOOT	TYPE AND SURFACE DESCRIPTION	JRC	GRAPHIC LOG	WEATHERING INDEX	STRENGTH INDEX	NOTES, WATER LEVELS, INSTRUMENTATION DRILLING FLUID	DEPTH SCALE (ELEV.)
0	ROCK @ SURFACE												
	Porph Andesite: Dk gry (looks like Basaltic And.) w/ grn-gry phenochrysts (~10%), sc. $CaCO_3$-healed fractures 0.5		10" OVER-CORE										
1			1	(2.5)	(2.5)								
2				2.5/3.1	1.9/3.1	2	w/some staining + $CaCO_3$ R,U / St,R	12 / 14	20 / 30	U	R-3.5		
3	3.0'	CL				1	w/$CaCO_3$ P,R	8	55				
	3.6'	CL				0							
4			2				R,U	12	40				
5						3	w/$CaCO_3$ + some Breccia P,R / U,SL	8 / 8	0 / 65	U	R-3.5		
6				3.0/3.7	2.2/3.7	>1	" Ab. Breccia below U,SL	10	65				
	Andesite Breccia: Gray, w/ red-brn clasts porph. groundmass 6.4'											☆ Ab. breccia + Gouge	
7	6.6'	CL				0					R-3.0		
	7.3'	CL	3			>0						Blocked OFF @ 7.3'	
8				1.3/1.3	0.6/1.3		w/Brn ox on surface U,R	10	65	U	R-3.0	Abundant IOS-stained Rubble 7.3-7.7'	
	8.6'		4			1							
9													
10				2.4/2.4	2.2'/2.4	1	w/$CaCO_3$ + Breccia U,SL	8	70	U	R-3.0		
						1	w/$CaCO_3$ + gouge + Breccia U,SL	10	70-90			Ab High Angle Slicked Fracts + Rubble	
11	11.0'		5									Blocked Off @ 11.0'	
	Sc Brn ox on Joint surfaces				1.0	2	w/Ab. $CaCO_3$ — U,SL	14	65			Ab Slicked (High-angle) Rubble w/ Brn staining + $CaCO_3$ 11.0-11.5'	
12				2.6/2.6	1.0/2.6		" R,U	16	90				
						4	w/Breccia + $CaCO_3$ R,U	12	50	U	R-3.0		
13	GRADATIONAL 13.0						R,U	12	70				
	Basaltic Andesite: Dk gry to black, Very closely fractured 13.6'						R,U / ST,R	12 / 18	70				
14			6			2	w/Brn ox P,R / St,R	8 / 12	60 40 PR				

DEPTH SCALE: 1"=2'
DRILLER: Buck
LOGGED BY: WDN
DATE: 4/7/03

SHANNON & WILSON, INC.

RECORD OF DRILLHOLE

SHEET 2 OF 10

BORING NO. 03-DD-237
PROJECT: H.H. Dam
PROJECT NO.: 21-1-08880-001
LOCATION:

DRILLING DATE: 4/7/03
DRILLING CO.: CRUX
DRILL RIG:
DRILL METHOD: HQ3

DATUM: NAVD88
COLLAR ELEV.: 1153.32
INCLINATION: 87
AZIMUTH: 202

J - Joint, F - Fault, S - Shear, B - Bedding, F - Foliation
Description: SM - Smooth, R - Rough, SL - Slickensided
Profile: ST - Stepped, U - Undulating, P - Planar

DEPTH SCALE (FEET)	DESCRIPTION	GRAPHIC LOG	RUN NO.	CORE RECOVERY (%)	RQD (%)	FRACTURES PER FOOT	DISCONTINUITY DATA: TYPE AND SURFACE DESCRIPTION	JRC	GRAPHIC LOG	WEATHERING INDEX	STRENGTH INDEX	NOTES, WATER LEVELS, INSTRUMENTATION DRILLING FLUID	DEPTH SCALE (ELEV.)
14	Basaltic Andesite (Cont.)		6 (CONT)	1.5/1.5	0.6/1.5	5	w/chlorite ST,R; P,R; (x3) ST,R	16; 10; 12	85; 50; 60	U	R3.5	All w/Brn Oil	
15	15.1'		7			4	w/Chlorite → R,U; → U,Sm; → R,U; → P,R	12; 8; 12→90; 6	40; 60; 60				
16				3.2/3.2	1.4/3.2	2	w/5-8mm CaCO3, Chlorite & gouge U,R; U,R	12; 12	65; 45	U	R3.5		
17							U,R	12	40				
18	18.3'					2	w/gouge+breccia +chlorite St,R	16	65			Blocked off @ 18.3'	
19	Dk gry Basaltic Andesite		8			1	Rubble w/Chlorite on faces		XXXX				
20						2	w/CaCO3+Chlorite → U,R; → U,R	10; 10	55; 70				
21				5.2/5.2	4.3/5.2	0	+CHLORITE W/Healed CaCO3-Fract (<10mm) w/ Breccia (Healed) U,R	12	40	U	R3.5		
22						1	U,R	12	35				
23						3	U,R; w/Chlorite → P,R; U,R	10; 8; 12	40; 40; 60				
24	23.5'		9			0						STOP @ 1425 TO REAM HOLE TO 20.0' W/AIR Hammer.	
25				5.1/5.1	4.8/5.1	1	w/Calls P,R	6	40	U	R3.5	Begin Drilling on 4/8/03 @ 0815	
26	Less Strength @ 25.5 Easily scratched w/Knife becoming slightly green-dk gry w/more mafic + felsic phenocrysts.					2	w/calcs+ breccia w/Chlorite+ CaCO3 U,R; → U,R; 11 U,SL	8; 10; 8	40; 30; 70				
27						1					R3.0		
28						0							

DEPTH SCALE: 1"=2'
LOGGED BY: CDW
DRILLER: Buck
DATE: 4/7/03

SHANNON & WILSON, INC.

RECORD OF DRILLHOLE

SHEET 3 OF 10

BORING NO. 03-DD-237
PROJECT: H.H. Dam
PROJECT NO.: 21-1-09820-001
LOCATION:

DRILLING DATE: 4/8/03
DRILLING CO.: CRUX
DRILL RIG:
DRILL METHOD: HQ-3

DATUM: NAVD88
COLLAR ELEV.: 1153.32
INCLINATION: 87
AZIMUTH: 202

J - Joint, F - Fault, S - Shear, B - Bedding, F - Foliation
Description: SM - Smooth, R - Rough, SL - Slickensided
Profile: ST - Stepped, U - Undulating, P - Planar

DEPTH SCALE (FEET)	DESCRIPTION	GRAPHIC LOG	RUN NO.	CORE RECOVERY (%)	RQD (%)	FRACTURES PER FOOT	DISCONTINUITY DATA: TYPE AND SURFACE DESCRIPTION	JRC	GRAPHIC LOG	WEATHERING INDEX	STRENGTH INDEX	NOTES, WATER LEVELS, INSTRUMENTATION DRILLING FLUID	DEPTH SCALE (ELEV.)
28			9 (CONT)			1	w/CaCO3 + Ab Chlorite P,R	8	25				
28.6'													
29	Subtle gradation to And. Breccia		10										
						0					R-3.0		
30							w/Brn Ox U,R	12	0				
				5.0/5.0	4.5/5.0	3	w/CaCO3 + Brn Ox → U,R	12	10	U			
31							U,R	12	20				
						1	U,R	10	40				
32													
						1	w/CaCO3 U,Sm	8	20				
33							w/Brn Ox + gouge U,R	10	65				
33.6'						2	w/Brn Ox → P,R	8	20 0				
34			11										
						2	w/Chlorite U,SL	10	60				
35							w/Chlorite U,R	12	55		R-3.5-3.0		
				5.0/5.0	4.5/5.0	1	P,R	8	40	U			
36													
36.5	Subtle Change												
37	Porph. Andesite DKGRY					1	w/Chlorite + CaCO3 → U,R	10	55				
							w/CaCO3 U,R	10	45				
38						3	P,R	6	75				
							w/Chlorite + breccia U,R	10	60				
38.6'						0							
38.6'			12										
39									30'			Poss. MB Fubble	
	Abundant gravel-sized red-brown pockets- Not a breccia yet, but					>1	w/Chlorite U,R	14					
40				5.0/5.0	4.8/5.0					U	R-3.0		
						0							
41													
41.7						1	U,Sm	8	45				
42	AND. BRECCIA												

DEPTH SCALE: 1"=2'
DRILLER: Buck

LOGGED BY: WDN
DATE: 4/8/03

SHANNON & WILSON, INC.

RECORD OF DRILLHOLE

SHEET 5 OF 10

BORING NO. 03-DD-237
PROJECT: H.H. Dam
PROJECT NO.: 21-1-09880-001
LOCATION:

DRILLING DATE: 4/8/03
DRILLING CO.: CRUX
DRILL RIG:
DRILL METHOD: HQ-3

DATUM: NAVD88
COLLAR ELEV.: 1153.32
INCLINATION: 87
AZIMUTH: 202

DEPTH SCALE (FEET)	DESCRIPTION	GRAPHIC LOG	RUN NO.	CORE RECOVERY (%)	RQD (%)	FRACTURES PER FOOT	DISCONTINUITY DATA: TYPE AND SURFACE DESCRIPTION	DISCONTINUITY DATA: JRC	DISCONTINUITY DATA: GRAPHIC LOG	WEATHERING INDEX	STRENGTH INDEX	NOTES, WATER LEVELS, INSTRUMENTATION DRILLING FLUID	DEPTH SCALE (ELEV.)
56			15 (CONT)			1	U,R	16	65				
57	Scattered flow bedding in pyroclastite @ 57.5'					1	w/gouge+ breccia U,SL	12	70			★16 breccia	
58	58.6' >		16			1	U,R	12	30				
59	59.9' And. Breccia: gray w/ reddish clasts, sc flow bedding, sc pockets of welded pyroclastics.			5.0/5.0	5.0/5.0	0				U	R-2.0	- R16 has all MB's	
60						0							
61						0							
62						0							
63	63.6' >		17			1	U,R	12	45				
64						0							
65	65.6' Seam of gray aphanitic Andesite			5.0/5.0	5.0/5.0	0				U	R-2.0	-2.5	
66	66.3' And. Breccia w/sc pyroclastics					1	P,R	6	45				
67						1	P,R	6	40				
68	68.6' >		18			0							
69				5.0/5.0	5.0/5.0	0				U	R-2.0		
70													

DEPTH SCALE: 1"=2'
DRILLER: Buck

LOGGED BY: WAN
DATE: 4/8/03

SHANNON & WILSON, INC.

RECORD OF DRILLHOLE

SHEET 6 OF 10

BORING NO. 03-DD-237
PROJECT: H.H. Dam
PROJECT NO.: 21-1-09880-001
LOCATION:

DRILLING DATE: 4/8/03
DRILLING CO.: CEUX
DRILL RIG:
DRILL METHOD: HQ-3

DATUM: NAVD88
COLLAR ELEV.: 1153.32
INCLINATION: 87
AZIMUTH: 202

J - Joint, F - Fault, S - Shear, B - Bedding, F - Foliation
Description: SM - Smooth, R - Rough, SL - Slickensided
Profile: ST - Stepped, U - Undulating, P - Planar

DEPTH SCALE (FEET)	DESCRIPTION	GRAPHIC LOG	RUN NO.	CORE RECOVERY (%)	RQD (%)	FRACTURES PER FOOT	TYPE AND SURFACE DESCRIPTION	JRC	GRAPHIC LOG	WEATHERING INDEX	STRENGTH INDEX	NOTES, WATER LEVELS, INSTRUMENTATION DRILLING FLUID	DEPTH SCALE (ELEV.)
70	70.8' ⇒ Increasing Pyroclastic ~~Texture~~ fragments, Ma breccia Texture (Hydroclastite Texture)	Andesite Pyroclastite	18 (CONT)			0							
71							U,R	8	50				
72						1							
73						0							
74	73.6' > Same - And Breccia Hgry w/ pyro-clastics (actually appears like a pyroclastite but is welded to R-2.0		19			0							
75				5.0/5.0	5.0/5.0	0				U	R-2.0		
76						0							
77						0							
78						0	w/CaCO3 + breccia → P,SL	4	55				
78.6' 79	Andesite Pyroclastite 78.6' >		20			1							
80	80.1' ⇒ F-gr-size pyrite pocket.					0					R-1.5		
81						0							
82	81.8' Gradational DK gry Porph. Andesite (30%) Med-sand-sized Hgry Phenocrysts.					1	R,U	12	40				
83						0					R-3.0		
							w/Brn ox + CaCO3 P,R	8	75				
84	83.6' >		21			2	w/CaCO3 U,SL	10	40				

Box 8

Box 9

DEPTH SCALE: 1"=2'
DRILLER: Buck
LOGGED BY: WDN
DATE: 4/8/03

SHANNON & WILSON, INC.

RECORD OF DRILLHOLE

SHEET 4 OF 10

BORING NO. 03-DD-237
PROJECT: HH Dam
PROJECT NO.: 21-09770-001
LOCATION:

DRILLING DATE: 4/8/03
DRILLING CO.: CRUX
DRILL RIG:
DRILL METHOD: HQ-3

DATUM: NAVD88
COLLAR ELEV.: 1153.32
INCLINATION: 87
AZIMUTH: 202

J - Joint, F - Fault, S - Shear, B - Bedding, F - Foliation
Description: SM - Smooth, R - Rough, SL - Slickensided
Profile: ST - Stepped, U - Undulating, P - Planar

DEPTH SCALE (FEET)	DESCRIPTION	GRAPHIC LOG	RUN NO.	CORE RECOVERY (%)	RQD (%)	FRACTURES PER FOOT	DISCONTINUITY DATA: TYPE AND SURFACE DESCRIPTION	DISCONTINUITY DATA: JRC	DISCONTINUITY DATA: GRAPHIC LOG	WEATHERING INDEX	STRENGTH INDEX	NOTES, WATER LEVELS, INSTRUMENTATION DRILLING FLUID	DEPTH SCALE (ELEV.)
42	And. Breccia: Lt. gray + red-brown		12 (CONT)			0					R3.0-2.5		
43	43.6'					0							
44			13			0							
45						0					R-2.5		
46	46.1'			5.0/5.0	5.0/5.0	1	U,R	8	40	U			
47	And. Pyroclastite: Low strength (easily scrs w/ knife), lt. gray w/ lith. pyroclastic fragments.					1	U,R	8	25		R-1.5		
48						0							
18.6	48.6'						w/CaCO3	U,SL	10	75		☆ Ab Breccia + gouge	
49	And. Pyroclastite: Top stronger than normal pyro and subtly grading to And. Breccia towards bottom of R14.		14	(4.2)	(3.7)	2	w/gouge	U,SL	12	60			
								U,SL	10	50			
50						2	w/gouge + CaCO3 →	U,SL	12	40		R2.0	
51				5.0/5.0	4.5/5.0	0							
52						0							
53						0							
	53.6'												
54			15			0							
55				5.0/5.0	5.0/5.0	0				U	R-2.0-1.5		
56						0							

Box 5
Box 6

DEPTH SCALE: 1"=2'
DRILLER: Buck
LOGGED BY: WDH
DATE: 4/8/03

SHANNON & WILSON, INC.

RECORD OF DRILLHOLE

SHEET 7 OF 10

BORING NO. 03-DD-237
PROJECT: H.H. Dam
PROJECT NO.: 21-1-09880-001
LOCATION:

DRILLING DATE: 4/8/03
DRILLING CO.: CRUX
DRILL RIG:
DRILL METHOD: HQ-3

DATUM: NAVD88
COLLAR ELEV.: 1133.32
INCLINATION: 87
AZIMUTH: 202

J - Joint, F - Fault, S - Shear, B - Bedding, F - Foliation
Description: SM - Smooth, R - Rough, SL - Slickensided
Profile: ST - Stepped, U - Undulating, P - Planar

DEPTH SCALE (FEET)	DESCRIPTION	GRAPHIC LOG	RUN NO.	CORE RECOVERY (%)	RQD (%)	FRACTURES PER FOOT	TYPE AND SURFACE DESCRIPTION	JRC	GRAPHIC LOG	WEATHERING INDEX	STRENGTH INDEX	NOTES, WATER LEVELS, INSTRUMENTATION DRILLING FLUID	DEPTH SCALE (ELEV.)
84			21 (CONT)						45		R-3.0		
85	84.8' Gradational Andesite Pyroclastite					2	w/CaCO3 P,R	8	45				
							" U,R	10	50	U			
						2	U,R	10	55		R-2.0-1.5		
86				5.0/5.0	4.7/5.0		w/CaCO3 U,R	12					
87						0							
88	87.6 ⇒ Zone of ab. pyrite + CaCO3 + healed 65° fractures					1	w/abCaCO3 Breccia P,SL	12	65			☆ AbCaCO3 + Breccia	
88.6'	88.3 ⇒												
89	88.6' >		22			0							
90						0						Run 22 is all MB's	
91				5.0/5.0	5.0/5.0	0				U	R-1.5		
92						0							
93						0							
94	93.6' > Pyroclastite - Ab. interstitial pyrite		23			0							
95				5.0/5.0	5.0/5.0	0				U	R-2.0-1.5		
96						0							
97						1	w/CaCO3 P,R	10	35				
98						0							

Box 9
Box 10

DEPTH SCALE: 1" = 2'
DRILLER: Buck
LOGGED BY: WDN
DATE: 4/8/03

SHANNON & WILSON, INC.

RECORD OF DRILLHOLE

SHEET 8 OF 10

BORING NO. 03-DD-237
PROJECT: H.H. Dam
PROJECT NO.: 21-1-09880-001
LOCATION:

DRILLING DATE: 4/8/03
DRILLING CO.: CRUX
DRILL RIG:
DRILL METHOD: HQ-3

DATUM: NAVD88
COLLAR ELEV.: 1153.32
INCLINATION: 87
AZIMUTH: 202

J - Joint, F - Fault, S - Shear, B - Bedding, F - Foliation
Description: SM - Smooth, R - Rough, SL - Slickensided
Profile: ST - Stepped, U - Undulating, P - Planar

DEPTH SCALE (FEET)	ROCK TYPE: DESCRIPTION	GRAPHIC LOG	RUN NO.	CORE RECOVERY (%)	RQD (%)	FRACTURES PER FOOT	DISCONTINUITY DATA: TYPE AND SURFACE DESCRIPTION	JRC	GRAPHIC LOG	WEATHERING INDEX	STRENGTH INDEX	NOTES, WATER LEVELS, INSTRUMENTATION DRILLING FLUID	DEPTH SCALE (ELEV.)
98	98.6'		23 (cont)			1	U, SL	8	45				
99			24			2	(x2) P, R	6	30, 35		R-2.0		
100	Top of turns			5.0/5.0	4.3/5.0	0	(15-20mm) Healed fracture w/ Euhedral $CaCO_3$ xstals			U		Fracture Broke when placing in Box - GOUGE	
101	101.1' Faulted Contact Porph. Andesite: Dk gry w/ lt gry pheno (~30%)					3	St, R	18	45				
							w/$CaCO_3$ + Pyrite U, R	8	40				
102							w/$CaCO_3$ + Pyrite U, R	8	30				
							w/$CaCO_3$ U, R	8	40				
103						1					R-3.0		
	103.6					1	P, R	6	35				
104			25										
105						2	w/$CaCO_3$ ST, R	14	40				
							w/GROUT R, U	12	80				
							" St, R	16					
106				5.0/5.0	2.9/5.0	3	" P, R	8	40, 50	U	R-3.0		
							P, R	6	50				
107						3	w/$CaCO_3$ (~3mm) U, R	8	50				
							ST, R	14	35				
							U, R	14	20				
108						>2	w/$CaCO_3$ + Gouge P, SL	6	60				
							w/$CaCO_3$ U, R	10	40, 50				
109	108.6'		26			2	w/Breccia + $CaCO_3$ St, R	16					
						3	w/Chlorite U, SL	10	65				
							St, R	16	50				
110				5.0/5.0	4.0/5.0		w/$CaCO_3$ U, R	12	65	U	R-3.0		
						0							
111													
112	111.8 Contact @ Fracture					1	w/$CaCO_3$ + Breccia St, R	16	30		R-2.5		

Box 10

Box 11

DEPTH SCALE: 1" = 2'
DRILLER: Buck
LOGGED BY: WDH
DATE: 4/8/03

SHANNON & WILSON, INC.

RECORD OF DRILLHOLE

SHEET 9 OF 10

BORING NO. 03-DD-237
PROJECT: H.H. Dam
PROJECT NO.: 211-09880-001
LOCATION:

DRILLING DATE: 4/8/03
DRILLING CO.: CRUX
DRILL RIG:
DRILL METHOD: HQ-3

DATUM: NAVD88
COLLAR ELEV.: 1153.32
INCLINATION: 87
AZIMUTH: 202

DEPTH SCALE (FEET)	DESCRIPTION	GRAPHIC LOG	RUN NO.	CORE RECOVERY (%)	RQD (%)	FRACTURES PER FOOT	DISCONTINUITY DATA: TYPE AND SURFACE DESCRIPTION	JRC	GRAPHIC LOG	WEATHERING INDEX	STRENGTH INDEX	NOTES, WATER LEVELS, INSTRUMENTATION DRILLING FLUID	DEPTH SCALE (ELEV.)
112	Andesite Pyroclastite: green-gray		26 (CONT)			1	U,SL	14	40		R-2.5		
113							w/2-3mm CaCO3 U,R	12	40/60				
114	113.6-114.1 Low interstitial strength 113.6' >		27	5.0/5.0	5.0/5.0	2	ST,SI	16			R-1.0		
115						0				U	R-2.0		
116						2	w/CaCO3	U,SL	14	50-70			
117						0	11" +Breccia +gouge	U,SL	8	75			
118						0							
118.6	118.2 Gradational												
119	And. Breccia: Dk gry w/red brn clasts, porph. groundmass 118.6' >		28			0						Run 28 has all FBs	
120				5.0/5.0	5.0/5.0	0				U	R-2.0		
121						0							
122						0							
123						0							
123.6	123.6' >												
124			29	5.0/5.0	4.4/5.0	0	W/CaCO3	U,R	14	30			
125						1				U	R-3.0		
126						1	W/CaCO3	U,R	12	40			

Box 12

Box 13

J - Joint
F - Fault
S - Shear
B - Bedding
F - Foliation

Description: SM - Smooth, R - Rough, SL - Slickensided

Profile: ST - Stepped, U - Undulating, P - Planar

DEPTH SCALE: 1" = 2'
DRILLER: Buck

LOGGED BY: WDN
DATE: 4/8/03

SHANNON & WILSON, INC.

RECORD OF DRILLHOLE

SHEET 10 OF 10

BORING NO. 03-DD-237
PROJECT: H.H. Dam
PROJECT NO.: Z1-1-09880-001
LOCATION:

DRILLING DATE: 4/8/03
DRILLING CO.: CRUX
DRILL RIG:
DRILL METHOD: HQ-3

DATUM: NAD88
COLLAR ELEV.: 1153.32
INCLINATION: 87
AZIMUTH: 202

J - Joint, F - Fault, S - Shear, B - Bedding, F - Foliation
Description: SM - Smooth, R - Rough, SL - Slickensided
Profile: ST - Stepped, U - Undulating, P - Planar

DEPTH SCALE (FEET)	DESCRIPTION	GRAPHIC LOG	RUN NO.	CORE RECOVERY (%)	RQD (%)	FRACTURES PER FOOT	DISCONTINUITY DATA: TYPE AND SURFACE DESCRIPTION	JRC	GRAPHIC LOG	WEATHERING INDEX	STRENGTH INDEX	NOTES, WATER LEVELS, INSTRUMENTATION DRILLING FLUID	DEPTH SCALE (ELEV.)
126	126.4' Gradational Porph. Andesite: DK gry w/ lt gry phenocrysts (~30%) m-sand size		29 (CONT)			0							
127						1	w/CaCO3 & gouge U,R	12	45	U	R-3.0		
128	128.6'					5	w/CaCO3 P,Sm P,Sl P,Sm R,U	4 4 12 4	60 70 20 20 30				
129			30										
130	Bottom of hole			5.0/5.0	4.2/5.0	1 >1	U,R	14	45	U	R-3.0		
131							w/CaCO3 → St,R w/CaCO3 U,R	16 8	XHOX XR,R 30				
132						4	U,R (x2) U,R	10 16	35 10 30				
133	133.6'					1	w/CaCO3 U,Sl P,Sm P,Sm	12 4 4	60 10 20			Abundant MBs 132.8-133.3'	
134			31	1.9/1.9	1.2/1.9	3 4	R,U	12	30 50				
135						1	w/Brn ox (x2) P,Sm R,U P,R R,U	4 10 8 10	40 35 10 10	U	R-3.0		
136	Bottom of Hole @ 135.5' @ 1645 on 4/8/03												
137													
138													
139													
140													

DEPTH SCALE: 1"=2'
DRILLER: Buck
LOGGED BY: WBN
DATE: 4/8/03

SHANNON & WILSON, INC.

RECORD OF DRILLHOLE

SHEET 1 OF 11

BORING NO. 03-DD-238
PROJECT: H.H. Dam
PROJECT NO.: 21-1-09880-001
LOCATION:

DRILLING DATE: 3/28/03
DRILLING CO.: CRUX
DRILL RIG:
DRILL METHOD: HQ-3

DATUM: NAVD88
COLLAR ELEV.: 1155
INCLINATION: 3°
AZIMUTH: 202°

ROCK TYPE: J - Joint, F - Fault, S - Shear, B - Bedding, F - Foliation
Description: SM - Smooth, R - Rough, SL - Slickensided
Profile: ST - Stepped, U - Undulating, P - Planar

DEPTH SCALE (FEET)	DESCRIPTION	GRAPHIC LOG	RUN NO.	CORE RECOVERY (%)	RQD (%)	FRACTURES PER FOOT	TYPE AND SURFACE DESCRIPTION	JRC	GRAPHIC LOG	WEATHERING INDEX	STRENGTH INDEX	NOTES, WATER LEVELS, INSTRUMENTATION DRILLING FLUID	DEPTH SCALE (ELEV.)
0	OVERBURDEN: weathered Andesite Pyroclastite lt. gry w/pumice, highly fract. w/ pyrite + IOS + gouge		OVER-CORE TO 1.2' w/ 14" CORE BARREL										
1	1.2'												
2	Andesite Pyroclastite: Highly weathered to slightly weathered		1			>2	R,U	10	45	HW	R-1.0	Sc. IOS-stained fractures (Healed) from 1.2'-1.9'	
							U,Sl	8	50				
3				4.0/4.0	1.9/4.0	>1	Gouge!! U,SL	6	60			☆2.5'-3.2' ⇒ ALL GOUGE	
							U,SL	6	60				
4	4.0					2	U,Sm	8	55	Sl.W	R1.5-2.0		
5						1	U,Sm	8	60				
6	5.2 Same, but unweathered Pyroclastite, some flow bedding		2			0				U			
7						1			70		R-2.0		
8				5.0/5.0	5.0/5.0	0	U,SL	8					
9						0							
10						0							
11	10.2' Same - slightly stronger Andesite pyroclastite.		3	5.0/5.0	5.0/5.0	0							
12						1	P,R	8	30	U	R-2.5		
13						0							
14						0							

Box 1

Box 2

DEPTH SCALE: 1" = 2'
DRILLER: Topher
LOGGED BY: WDW
DATE: 3/28/03

SHANNON & WILSON, INC.

RECORD OF DRILLHOLE

SHEET 2 OF 11

BORING NO. 03-DD-238
PROJECT: H. H. Dam
PROJECT NO.: 21-1-09850-001
LOCATION:

DRILLING DATE: 3/28/03
DRILLING CO.: CDHX
DRILL RIG:
DRILL METHOD: HQ3

DATUM: NAVD88
COLLAR ELEV.:
INCLINATION: 3°
AZIMUTH: 202°

DEPTH SCALE (FEET)	DESCRIPTION	GRAPHIC LOG	RUN NO.	CORE RECOVERY (%)	RQD (%)	FRACTURES PER FOOT	TYPE AND SURFACE DESCRIPTION	JRC	GRAPHIC LOG	WEATHERING INDEX	STRENGTH INDEX	NOTES, WATER LEVELS, INSTRUMENTATION DRILLING FLUID	DEPTH SCALE (ELEV.)
14			3 (cont)			1	w/breccia + gouge R,U	12	45		R-2.5		
15	15.4' 15.2' > Andesite Breccia: Red-brown breccia frags - groundmass supported - dk gry groundmass		4	5.0/5.0	5.0/5.0	0				U	R-2.5 R-3.0		
16						0							
17						0							
18	18.2' Andesite Pyroclastite: lt. + dk. gray, mud bedded.					0							
19						1	U,SL	8	50		R-2.5		
20	Likely result of Air Reaming of hole → 20.2' > 20.6' Same Pyroclastite	CL/CL	5	(2.8) 2.9/3.3	(2.8) 2.9/3.3	0				U	R-2.5	stop drilling @ 1110 to overcore w/ air-hammer to 20' 1515 - Begin Drilling	
21						0							
22						0							
23						0							
24	23.5 >		6	1.7/1.7	1.5/1.7	1	SL,SL	12	70 Healed	U	R-2.5 - 2.0	R-5 < Blocked off @ 23.5'	
25						0							
26	25.2' >		7	5.0/5.0	5.0/5.0	0				U	R-2.5		
27						0							
28						0							

ROCK TYPE

J - Joint
F - Fault
S - Shear
B - Bedding
F - Foliation

Description
SM - Smooth
R - Rough
SL - Slickensided

Profile
ST - Stepped
U - Undulating
P - Planar

DISCONTINUITY DATA

DEPTH SCALE: 1"=2'
LOGGED BY: WAW
DRILLER: Topher
DATE:

SHANNON & WILSON, INC.

RECORD OF DRILLHOLE

SHEET 3 OF 11

BORING NO. 03-DD-238
PROJECT: H.H. Dam
PROJECT NO.: 21-1-09880-001
LOCATION:

DRILLING DATE: 3/28/03
DRILLING CO.: CRUX
DRILL RIG:
DRILL METHOD: HQ-3

DATUM: NAVD88
COLLAR ELEV.:
INCLINATION: 3°
AZIMUTH: 202

DEPTH SCALE (FEET)	DESCRIPTION	GRAPHIC LOG	RUN NO.	CORE RECOVERY (%)	RQD (%)	FRACTURES PER FOOT	TYPE AND SURFACE DESCRIPTION	JRC	GRAPHIC LOG	WEATHERING INDEX	STRENGTH INDEX	NOTES, WATER LEVELS, INSTRUMENTATION DRILLING FLUID	DEPTH SCALE (ELEV.)
28			7 (cont)								R-2.5		
28.8'						1	w/fault slicks R,U	14	60				
29	Andesite Breccia: w/faint pyroclastic texture, gray w/ lt. gry phenocrysts in frags + groundmass.						w/fault slicks R,U	14	60	U	R-3.0		
30	30.2' >					>2	P,Sm	2	40				
	Same - And. Breccia		8								R-2.5		
31						1	U,SL	12	70				
32				5.0/5.0	5.0/5.0	1	w/gouge + breccia → U,SL	12	70	U	R-3.0		
33						1	ST,R	16	50				
34						0							
35						0							
	And. Breccia - groundmass-sup. - Dark gray w/ red-brn clasts. 35.2' >		9										
36						0							
37				5.0/5.0	5.0/5.0	0				U	R-3.0		
38						2	w/calcs → U,R	12	30				
							U,R	10	80				
39						1	w/fault slicks + breccia ST,R	18	25				
40						0						3/28/03 Done Drilling for Day @ 1645 Begin on 3/29/03 @ 0750	
	40.5' 65° contact SHARP 40.2' >		10								R-3.0		
41	Andesite Pyroclastite: lt. gry, poorly welded, breccia texture of pyro. clasts.			5.0/5.0	5.0/5.0	0					R-2.0		
42						2	U,R	12	80				

DEPTH SCALE: 1"=2'
LOGGED BY: WSW
DRILLER: Topken
DATE:

SHANNON & WILSON, INC.

RECORD OF DRILLHOLE

SHEET 4 OF 11

BORING NO. 03-DD-238
PROJECT: H.H. Dam
PROJECT NO.: 21-1-09880-001
LOCATION:

DRILLING DATE: 3/28/03
DRILLING CO.: CRUX
DRILL RIG:
DRILL METHOD: HQ-3

DATUM: NAVD88
COLLAR ELEV.:
INCLINATION: 3°
AZIMUTH: 202°

J - Joint, F - Fault, S - Shear, B - Bedding, F - Foliation
Description: SM - Smooth, R - Rough, SL - Slickensided
Profile: ST - Stepped, U - Undulating, P - Planar

DEPTH SCALE (FEET)	ROCK TYPE: DESCRIPTION	GRAPHIC LOG	RUN NO.	CORE RECOVERY (%)	RQD (%)	FRACTURES PER FOOT	DISCONTINUITY DATA: TYPE AND SURFACE DESCRIPTION	JRC	GRAPHIC LOG	WEATHERING INDEX	STRENGTH INDEX	NOTES, WATER LEVELS, INSTRUMENTATION DRILLING FLUID	DEPTH SCALE (ELEV.)
42	Ab pyrite + $CaCO_3$ - filled/Healed fractures		10 (cont)				w/ab. gouge + breccia U,SL	8	80-90				
43						0				U	R-2.0		
	Gradational 43.7'												
44	Andesite Tuff - Poorly welded ash and pyroclastic debris. gray.					0					R-1.0	Zone of Soft Material	
45	Faulted Contact					1	U,SM	10	35		R-2.0	← Poss. gouge @ bottom	
	Andesite pyroclastite: light gry 45.2'												
46	High RQD but fractures filled with clay and easily breaks by hand		11	5.0/5.0	5.0/5.0	1							
	46.3-47.0 - Tan ash seam (partly welded)						U,SL	14	50		R-2.0		
47	70° Contact					0				U			
	Andesite Breccia: increasing strength w/depth, 3a-gr-sized fragments, porph groundmass w/ bettered developed phenocrysts w/ depth.												
48						0	w/Rounded Rubble (MB?) → U,R	10	20		R-2.5		
49						2	P,R	8	40		R-3.0		
50						1	w/gouge P,R	8	30				
	50.2'		12				w/$CaCO_3$ U,SL	12	25				
51	Same w/ Increasing clast size to cobble-sized.					1							
52				5.0/5.0	4.8/5.0	0				U	R-3.0		
53						0							
54						0							
55						1	P,R	8	45				
	55.2'		13	5.0/5.0	5.0/5.0								
56						0				U	R-3.0		

Box 5

Box 6

DEPTH SCALE:
DRILLER:
LOGGED BY:
DATE:

SHANNON & WILSON, INC.

RECORD OF DRILLHOLE

SHEET 5 OF 11

BORING NO. 03-DD-238
PROJECT: H.H. Dam
PROJECT NO.: 21-1-09880-001
LOCATION:

DRILLING DATE:
DRILLING CO.:
DRILL RIG:
DRILL METHOD:

DATUM:
COLLAR ELEV.:
INCLINATION:
AZIMUTH:

DEPTH SCALE (FEET)	DESCRIPTION (ROCK TYPE)	GRAPHIC LOG	RUN NO.	CORE RECOVERY (%)	RQD (%)	FRACTURES PER FOOT	DISCONTINUITY DATA: TYPE AND SURFACE DESCRIPTION	JRC	GRAPHIC LOG	WEATHERING INDEX	STRENGTH INDEX	NOTES, WATER LEVELS, INSTRUMENTATION DRILLING FLUID	DEPTH SCALE (ELEV.)
56	same — And. Breccia dark gray w/red-pink rock breccia clasts - groundmass supported.		13 (cont)			0							
57						0							
58						0				U	R-3.0		
59						0							
60						1	U, SL	8	60			MB - Broke in Box	
	60.2'		14				w/Breccia St, SL	12	50				
61					3.7	3	R, U	12	60		R-3.0		
	61.3 Andesite Tuff/Pyroclastite:			5.0	5.0		St, R	16	50 15				
				5.0			R, U	14	10				
62						4	R, U w/gouge	12	48	Ash/gouge		? Soft Zone	
							St, R	16	35		R-2.0		
	62.7 And Breccia: Dkgry porph groundmass w/gravel-sized clasts,						w/gouge + breccia P, R	12	30	U			
63						1			30				
							P, Sm	4					
64						1	w/breccia + gouge U, SL	12	40		R-3.0		
65						1	St, R	16	30				
	65.2'		15										
66						0							
67				5.0	4.8	0							
				5.0	5.0					U	R-3.0		
68						1	U, SL	14	60				
							U, R	14	20				
69						1	Healed w/ Soft gouge		30				
70						0							

Box 6
0.2'

Box 7

DEPTH SCALE:
DRILLER:
LOGGED BY:
DATE:

SHANNON & WILSON, INC.

RECORD OF DRILLHOLE

SHEET 6 OF 11

BORING NO. 03-DD-238
PROJECT: H.H. Dam
PROJECT NO.: 21-09880-001
LOCATION:

DRILLING DATE: 3/28/03
DRILLING CO.: CRUX
DRILL RIG:
DRILL METHOD: HQ-3

DATUM: NAVD88
COLLAR ELEV.:
INCLINATION: 3°
AZIMUTH: 202

DEPTH SCALE (FEET)	DESCRIPTION	GRAPHIC LOG	RUN NO.	CORE RECOVERY (%)	RQD (%)	FRACTURES PER FOOT	TYPE AND SURFACE DESCRIPTION	JRC	GRAPHIC LOG	WEATHERING INDEX	STRENGTH INDEX	NOTES, WATER LEVELS, INSTRUMENTATION DRILLING FLUID	DEPTH SCALE (ELEV.)
70	70.2' → Same And Breccia		15										
			16										
71				(48)	(41.2)		U, R	12	20				
							U, SL	12					
72				5.0/5.0	4.4/5.0					U	R30		
73													
74							w/Pyrite, CaCO3 + Chlorite						
75							P, R	10	15				
							w/CaCO3 (~3mm) → U, SL	8	20			MBS	
	75.2' → Andesite Breccia						→ U, SL	10	65				
76			17				U, R	14	30				
							U, R	10	30				
77				5.0/5.0	4.8/5.0					U	R3.0		
78							P, R	6	25				
79												MBS	
80													
	80.2' → And. Breccia		18										
81													
82				5.0/5.0	5.0/5.0		U, R	14	40				
83													
84													

J - Joint
F - Fault
S - Shear
B - Bedding
F - Foliation

Description: SM - Smooth, R - Rough, SL - Slickensided

Profile: ST - Stepped, U - Undulating, P - Planar

DISCONTINUITY DATA

DEPTH SCALE:
LOGGED BY:
DRILLER:
DATE:

SHANNON & WILSON, INC.

RECORD OF DRILLHOLE

SHEET 7 OF 11

BORING NO. 03-DD-238
PROJECT: H.H.Dam
PROJECT NO.: Z1-1-09880-001
LOCATION:

DRILLING DATE: 3/28/03
DRILLING CO.: CEWL
DRILL RIG:
DRILL METHOD: HQ3

DATUM: NAVD88
COLLAR ELEV.:
INCLINATION: 3°
AZIMUTH: 202°

DEPTH SCALE (FEET)	DESCRIPTION	GRAPHIC LOG	RUN NO.	CORE RECOVERY (%)	RQD (%)	FRACTURES PER FOOT	TYPE AND SURFACE DESCRIPTION	JRC	GRAPHIC LOG	WEATHERING INDEX	STRENGTH INDEX	NOTES, WATER LEVELS, INSTRUMENTATION DRILLING FLUID	DEPTH SCALE (ELEV.)
84			18			1	w/CaCO3 (<1-2 mm) (Partly sealed) P,SL	4	60				
85	Same And. Breccia 85.2'		19	5.0/5.0	4.7/5.0	0				U	R-2.5-3.0	Run 19 Appears slightly Weaker	
86						0							
87						0							
88						0							
89						1	w/gouge + breccia U,SL	12	60				
90	90.2'		20			2	w/calcite U,SL / U,SL	12 / 12	45 / 20				
91	Same - Becoming clast-supported			5.0/5.0	5.0/5.0	0				U	R-3.0	All one piece	
92						0							
93						0							
94						0							
95	95.2'		21			0							
96				5.0/5.0	5.0/5.0	0				U	R-3.0	All one Piece	
97						0							
98						0							

Lot 7
Lot 10

DEPTH SCALE:
DRILLER:
LOGGED BY:
DATE:

SHANNON & WILSON, INC.

RECORD OF DRILLHOLE

SHEET 8 OF 11

BORING NO. 03-DD-238
PROJECT: A.H. Dam
PROJECT NO.: 21-1-09880-001
LOCATION:

DRILLING DATE: 3/28/03
DRILLING CO.: CRUX
DRILL RIG:
DRILL METHOD: HQ-3

DATUM: NAD83
COLLAR ELEV.:
INCLINATION: 3°
AZIMUTH: 202°

DEPTH SCALE (FEET)	DESCRIPTION	GRAPHIC LOG	RUN NO.	CORE RECOVERY (%)	RQD (%)	FRACTURES PER FOOT	TYPE AND SURFACE DESCRIPTION	JRC	GRAPHIC LOG	WEATHERING INDEX	STRENGTH INDEX	NOTES, WATER LEVELS, INSTRUMENTATION DRILLING FLUID	DEPTH SCALE (ELEV.)
98			21 (CONT)				Several MBs that are slicked						
99													
100													
100.2	Same - And. Breccia		22										
101													
102				5.0/5.0	5.0/5.0					U	R-2.5-3.0	Run 22 appears slightly weaker - still And. Breccia	
103													
104													
105													
105.2	Same - And. Breccia Slightly lower strength appears to be subgaseous texture/Brecciation		23	(3.7) 3.9/3.9	(3.7) 3.9/3.9					U	R-2.5-3.0		
107													
108													
109													
109.1	Same - w/several spin-marked MBs		24	1.1/1.1	1.1/1.1					U	R-2.5-3.0	← Blocked off 2 spin-marked MBs	
110													
110.2	Same		25	5.0/5.0	5.0/5.0					U	R-2.5-3.0		
111													
112													

Box 10
Box 11
Box 12

DEPTH SCALE:
LOGGED BY:
DRILLER:
DATE:

SHANNON & WILSON, INC.

RECORD OF DRILLHOLE

SHEET 9 OF 11

BORING NO. 03-DD-238
PROJECT: H.H. Dam
PROJECT NO.: Z1-1-09880-001
LOCATION:

DRILLING DATE: 3/28/03
DRILLING CO.: CRUX
DRILL RIG:
DRILL METHOD: HQ-3

DATUM: NAVD88
COLLAR ELEV.:
INCLINATION: 3°
AZIMUTH: 202

DEPTH SCALE (FEET)	DESCRIPTION	GRAPHIC LOG	RUN NO.	CORE RECOVERY (%)	RQD (%)	FRACTURES PER FOOT	TYPE AND SURFACE DESCRIPTION	JRC	GRAPHIC LOG	WEATHERING INDEX	STRENGTH INDEX	NOTES, WATER LEVELS, INSTRUMENTATION DRILLING FLUID	DEPTH SCALE (ELEV.)
112	And. Breccia - grades to clasts w/ diffuse margins (Ghost-like)		25				U, SL	12	50				
113													
114													
115													
115.2' >													
116	Same		26							U	R-2.5-3.0		
117	— Top of tunnel			5.0/5.0	5.0/5.0							All 1 piece	
118													
119													
120													
120.2' >	Same - although faintly grading to a more pyroclastic texture		27	(4.2) 4.2/5.0	(4.2) 4.2/5.0					U	R-2.5-3.0		
121													
122													
123													
124									MBT				
124.4		CL CL CL CL										CORE LOSS May be related to the Disc. @ 125.2'	
125									40				
125.2' >			28	4.6/4.6	2.6/4.6		w/calcite U, SL	6		U	R-2.5-3.0		
126													

Box 12

Box 13

DEPTH SCALE:
DRILLER:
LOGGED BY:
DATE:

SHANNON & WILSON, INC.

RECORD OF DRILLHOLE

SHEET 10 OF 11

BORING NO. 03-DD-238
PROJECT: H.H. Dam
PROJECT NO.: 211-09880-001
LOCATION:

DRILLING DATE: 3/28/03
DRILLING CO.: CRUX
DRILL RIG:
DRILL METHOD: HQ-3

DATUM: NAVD88
COLLAR ELEV.:
INCLINATION: 3°
AZIMUTH: 202°

ROCK TYPE: J - Joint, F - Fault, S - Shear, B - Bedding, F - Foliation
Description: SM - Smooth, R - Rough, SL - Slickensided
Profile: ST - Stepped, U - Undulating, P - Planar

DEPTH SCALE (FEET)	DESCRIPTION	GRAPHIC LOG	RUN NO.	CORE RECOVERY (%)	RQD (%)	FRACTURES PER FOOT	TYPE AND SURFACE DESCRIPTION	JRC	GRAPHIC LOG	WEATHERING INDEX	STRENGTH INDEX	NOTES, WATER LEVELS, INSTRUMENTATION DRILLING FLUID	DEPTH SCALE (ELEV.)
126	Andesite Breccia		28										
127													
128							R,U	12	50			R-1.0	
	-128.2' Core is highly fractured w/ab 35-55° Disc. w/gouge + breccia. (Still Andesite Breccia)						U,SL	12	70				
129							P,R	8	40		R-2.0	(less for the fault gouge)	
												☆ Ab. gouge + breccia along Disc. (very closely spaced)	
129.8	129.8-130.8' ⇒ 129.8' > Ab. $CaCO_3$ + other filled vesicles		29				Blocked off →						
130													
131				5.4/5.4	5.4/5.4						R-2.0	-2.5	
132							w/gouge + breccia U,Sl	12	65	U		MB rubble	
133							" U,Sl	12	70				
134													
135													
136	Some And. Breccia 135.2 > Ab. "Zoned" breccia frags - Poss. boardwalk pyroclastite		30				U,R	12	← MB 45	U	R-2.5		
137				5.0/5.0	5.0/5.0		U,SL	12	50			← MB rubble	
138													
139							w/gouge + breccia P,R	8	45				
140													

Box 13

Box 14

Box 15

Breaks very easily / Pavement rock good but very broken

DEPTH SCALE:
DRILLER:
LOGGED BY:
DATE:

SHANNON & WILSON, INC.

RECORD OF DRILLHOLE

SHEET 11 OF 11

BORING NO.
PROJECT:
PROJECT NO.:
LOCATION:

DRILLING DATE:
DRILLING CO.:
DRILL RIG:
DRILL METHOD:

DATUM:
COLLAR ELEV.:
INCLINATION:
AZIMUTH:

DEPTH SCALE (FEET)	DESCRIPTION	GRAPHIC LOG	RUN NO.	CORE RECOVERY (%)	RQD (%)	FRACTURES PER FOOT	TYPE AND SURFACE DESCRIPTION	JRC	GRAPHIC LOG	WEATHERING INDEX	STRENGTH INDEX	NOTES, WATER LEVELS, INSTRUMENTATION DRILLING FLUID	DEPTH SCALE (ELEV.)
	ROCK TYPE		J - Joint F - Fault S - Shear B - Bedding F - Foliation		Description SM - Smooth R - Rough SL - Slickensided		Profile ST - Stepped U - Undulating P - Planar	DISCONTINUITY DATA					
Box 15			30										
	BOB @ 140.2 3/29/03 @ 1530												

DEPTH SCALE:
DRILLER:

LOGGED BY:
DATE:

SHANNON & WILSON, INC.

Zone (D) on 11 pieces max 5 pc in UTM

G LOG	DIVISION	INSTALLATION: Howard Hanson Dam	HOLE NUMBER: 04-RD/DD-239; SHEET: 1 OF 2 SHEETS
Cutoff Wall		10. SIZE AND TYPE OF BIT: HWT / HQ	
(Coordinates or Station): 1446 5236583 N		11. DATUM FOR ELEVATION SHOWN (TBM or MSL)	
ILLING AGENCY: Crux Subsurface Inc		12. MANUFACTURER'S DESIGNATION OF DRILL: Burley 5500-1	
4. HOLE NUMBER (As shown on drawing title and file number): 04-RD/DD-239		13. TOTAL NUMBER OF OVERBURDEN SAMPLES TAKEN: DISTURBED: 0; UNDISTURBED: 7	
5. NAME OF DRILLER: Mike Stairwalt		14. TOTAL NUMBER OF CORE BOXES: 2	15. ELEVATION OF GROUNDWATER
6. DIRECTION OF HOLE: ☑ VERTICAL ☐ INCLINED _____ DEGREES FROM VERTICAL		16. DATE STARTED: 24 FEB 04	DATE COMPLETED: 25 FEB 04
7. THICKNESS OF OVERBURDEN: 19.5		17. ELEVATION TOP OF HOLE: ~1165 ft MSL	
8. DEPTH DRILLED INTO ROCK: 14.0		18. TOTAL CORE RECOVERY FOR BORING: 100.0 %	
9. TOTAL DEPTH OF HOLE: 33.5'		19. SIGNATURE OF INSPECTOR: Dan A. Davis	
LOCATION SKETCH/COMMENTS		SCALE: 1:314.96	

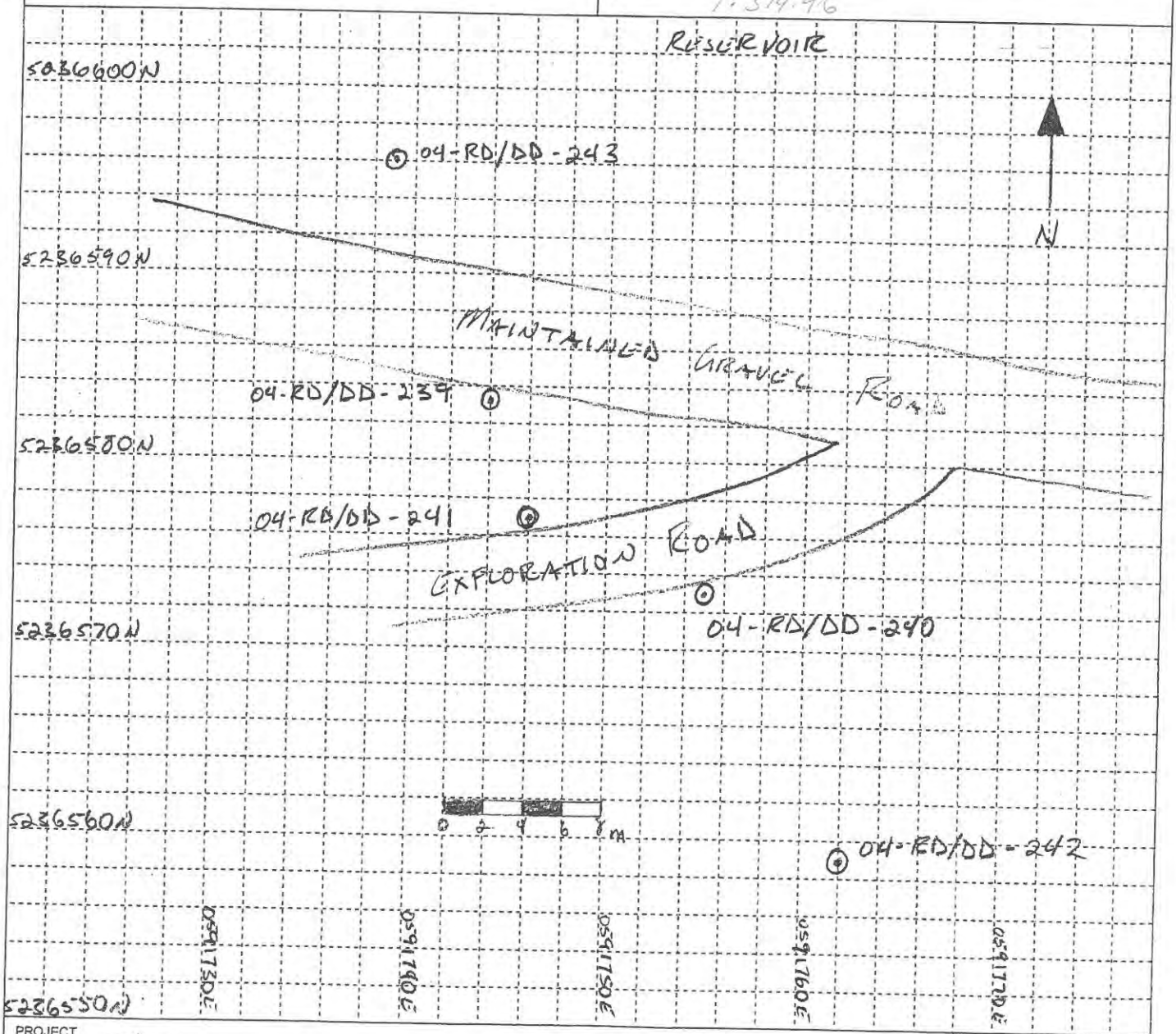

PROJECT: H&D Cutoff Wall	HOLE NUMBER: 04-RD/DD-239

ENG FORM 1836

DRILLING LOG (CONTINUATION SHEET)

PROJECT: HHD CUTOFF WALL	ELEVATION TOP OF HOLE	HOLE NUMBER: 04-RD/DD-239
	INSTALLATION: HOWARD HANSON DAM	SHEET: 2 OF 2 SHEETS

ELEV (a)	DEPTH (b)	LEGEND (c)	CLASSIFICATION OF MATERIALS (Description) (d)	% CORE RECOVERY (e)	BOX OR SAMPLE NUMBER (f)	REMARKS (Drilling time, water loss, depth of weathering, etc. if significant) (g)
	0		OLIVE GREEN TO BROWN TO RUSTY BROWN, DENSE, LOW PLASTICITY, RELATIVELY WELL GRADED SANDS AND GRAVELS (GW)		A	SPT: 10/6" 25/6" 41/6"
	5				B	SPT: 14/6" 18/6" 21/6"
					C	SPT: 41/6" 50/5.5"
	10				D	SPT: 50/6"
			DARK BROWN TO BLUE-GREEN, LOW PLASTICITY, DENSE, GRAVELLY SANDS (SW). SAND GRAINS BECOME FINER DOWN SECTION		E	SPT: 18/6" 50/6"
	15				F	SPT: 27/6" 50/4.5"
					G	SPT: 50/4.5"
	20					SPT: 50/4.0" TOP of ROCK @ 19.5'
			GRAY GREEN, RELATIVELY MASSIVE, WEAK (R2), STRONGLY ALTERED, ANDESITE (UPPER 8.5' WAS VERY WEATHERED) OVER TWO FRACTURES PER FOOT BETWEEN 25.5' AND 27.5'	100 100	1 1	AVERAGES 1 FRACTURE PER 2 FEET
	25			100 80	2 1	
				100 64	3 1	
	30			100 100	4 1,2	
	35		BOH @ 33.5'	Rec %	RQD %	Run # Bx #

ENG FORM 1836-A (ER 1110-1-1801)	PROJECT: HHD CUTOFF WALL	HOLE NUMBER: 04-RD/DD-239

HOLE NUMBER 04-RD/DD-240			
DRILLING LOG	DIVISION	INSTALLATION HOWARD HANSON DAM	SHEET 1 OF 2 SHEETS

1. PROJECT HHD CUTOFF WALL	10. SIZE AND TYPE OF BIT HWT / HQ
2. LOCATION (Coordinates or Station) 0591755E 5236573N	11. DATUM FOR ELEVATION SHOWN (TBM or MSL)
3. DRILLING AGENCY CRUX SUBSURFACE INC	12. MANUFACTURER'S DESIGNATION OF DRILL BURLEY 5500-1
4. HOLE NUMBER (As shown on drawing title and file number) 04-RD/DD-240	13. TOTAL NUMBER OF OVERBURDEN SAMPLES TAKEN — DISTURBED Ø — UNDISTURBED 5
5. NAME OF DRILLER MIKE STARLING	14. TOTAL NUMBER OF CORE BOXES 2 — 15. ELEVATION OF GROUNDWATER
6. DIRECTION OF HOLE ☒ VERTICAL ☐ INCLINED _____ DEGREES FROM VERTICAL	16. DATE STARTED 25 FEB 04 — DATE COMPLETED 25 FEB 04
7. THICKNESS OF OVERBURDEN 15.8	17. ELEVATION TOP OF HOLE ~1171 AMSL
8. DEPTH DRILLED INTO ROCK 12.7	18. TOTAL CORE RECOVERY FOR BORING 96.5 %
9. TOTAL DEPTH OF HOLE 28.5	19. SIGNATURE OF INSPECTOR [signature]
LOCATION SKETCH/COMMENTS	SCALE 1:314.96

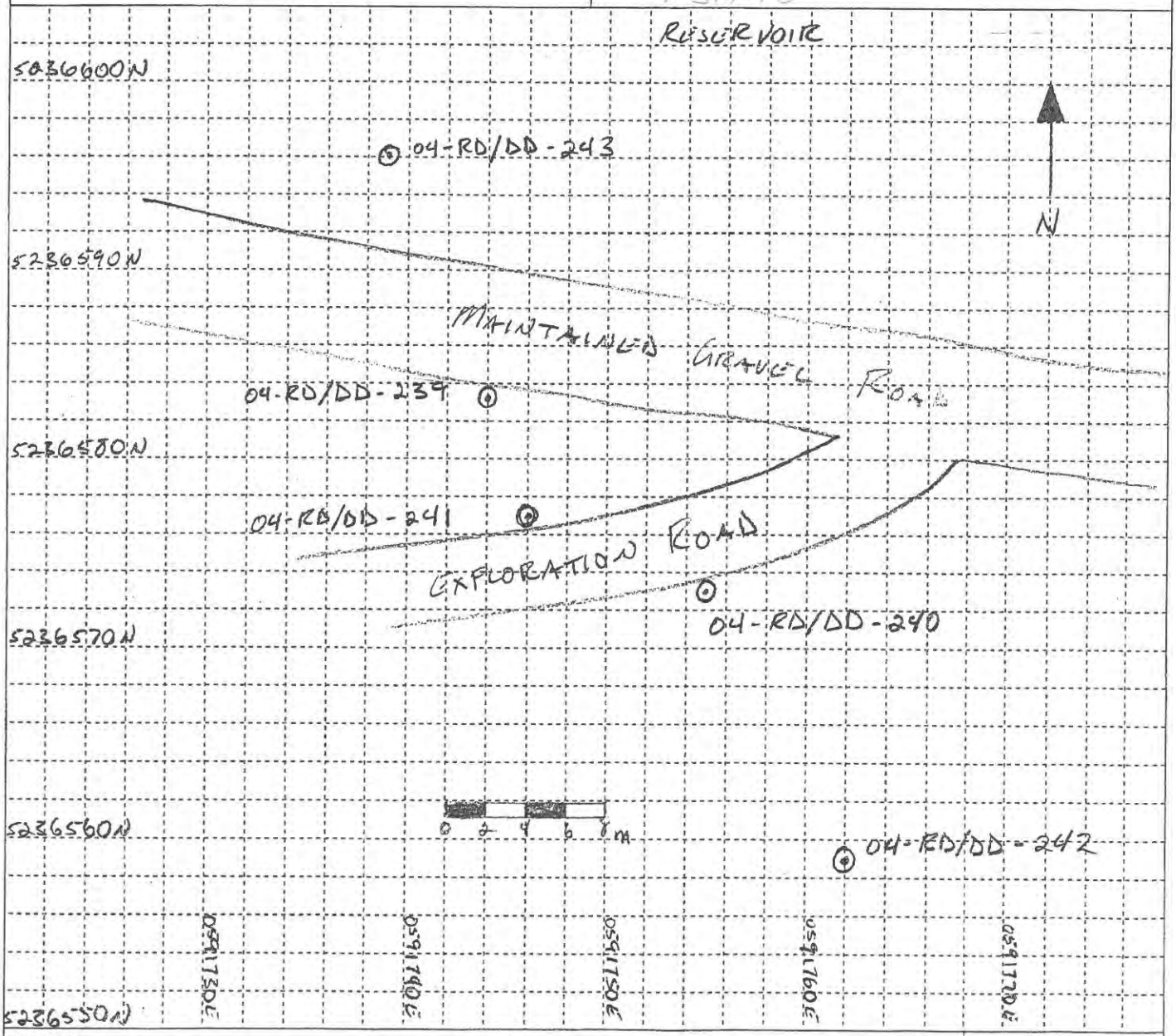

PROJECT HHD CUTOFF WALL	HOLE NUMBER 04-RD/DD-240

ENG FORM 1836

DRILLING LOG (CONTINUATION SHEET)

ELEVATION TOP OF HOLE	HOLE NUMBER
	04-RD/DD-240

PROJECT	INSTALLATION	SHEET
HHD CUTOFF WALL	HOWARD HANSON DAM	2 OF 2 SHEETS

ELEV (a)	DEPTH (b)	LEGEND (c)	CLASSIFICATION OF MATERIALS (Description) (d)	% CORE RECOVERY (e)	BOX OR SAMPLE NUMBER (f)	REMARKS (Drilling time, water loss, depth of weathering, etc. if significant) (g)
			RUSTY BROWN, NON-PLASTIC, MODERATELY DENSE, MODERATELY WELL GRADED SANDS AND GRAVELS (GW)		A	SPT 8/6" 20/6" 50/1"
	5				B	SPT 17/6" 23/6" 28/6"
			SAME AS ABOVE EXCEPT A LARGER PROPORTION OF SANDS THAN GRAVELS (SW)		C	SPT 18/6" 50/4"
	10				D	SPT : 50/6"
					E	SPT: 20/6" 25/6" 27/6"
	15					SPT: 23/6" 10/6" 45/6" — 15.8' TOP OF ROCK
			MINT GREEN, WEAK (R2), VERY STRONGLY ALTERED INTERMEDIATE VOLCANIC. APPROXIMATELY 1 FRACTURE PER FOOT	53 53	1 1	SPT: 50/3"
	20			112 93	2 1	CORE LOSS FROM 17.0-17.8' IS ALMOST CERTAINLY DUE TO CORING OVER AN SPT SAMPLE
				100 80	3 1	
	25			100 100	4 1, 2	
	30		BOH @ 28.5'	Rec % RQD %	Run # BX #	

ENG FORM 1836-A (ER 1110-1-1801) PROJECT HHD CUTOFF WALL HOLE NUMBER 04-RD/DD-240

HOLE NUMBER 04-RD/DD-241

DRILLING LOG

DIVISION

INSTALLATION: HOWARD HANSON DAM

SHEET 1 OF 2 SHEETS

1. PROJECT: HHD CUTOFF WALL	10. SIZE AND TYPE OF BIT: HWT / HQ
2. LOCATION (Coordinates or Station): 0591746E 5236577N	11. DATUM FOR ELEVATION SHOWN (TBM or MSL)
3. DRILLING AGENCY: CRUX SUBSURFACE Inc	12. MANUFACTURER'S DESIGNATION OF DRILL: BURLEY 5500-1
4. HOLE NUMBER (As shown on drawing title and file number): 04-RD/DD-241	13. TOTAL NUMBER OF OVERBURDEN SAMPLES TAKEN — DISTURBED: 0 — UNDISTURBED: 9
5. NAME OF DRILLER: MIKE STARLING	14. TOTAL NUMBER OF CORE BOXES: 2 — 15. ELEVATION OF GROUNDWATER
6. DIRECTION OF HOLE: ☒ VERTICAL ☐ INCLINED _____ DEGREES FROM VERTICAL	16. DATE STARTED: 26 FEB 04 — DATE COMPLETED: 26 FEB 04
7. THICKNESS OF OVERBURDEN: 25.0'	17. ELEVATION TOP OF HOLE: ~1172' MSL
8. DEPTH DRILLED INTO ROCK: 13.5'	18. TOTAL CORE RECOVERY FOR BORING: 98.5 %
9. TOTAL DEPTH OF HOLE: 38.5'	19. SIGNATURE OF INSPECTOR
LOCATION SKETCH/COMMENTS	SCALE: 1:314.96

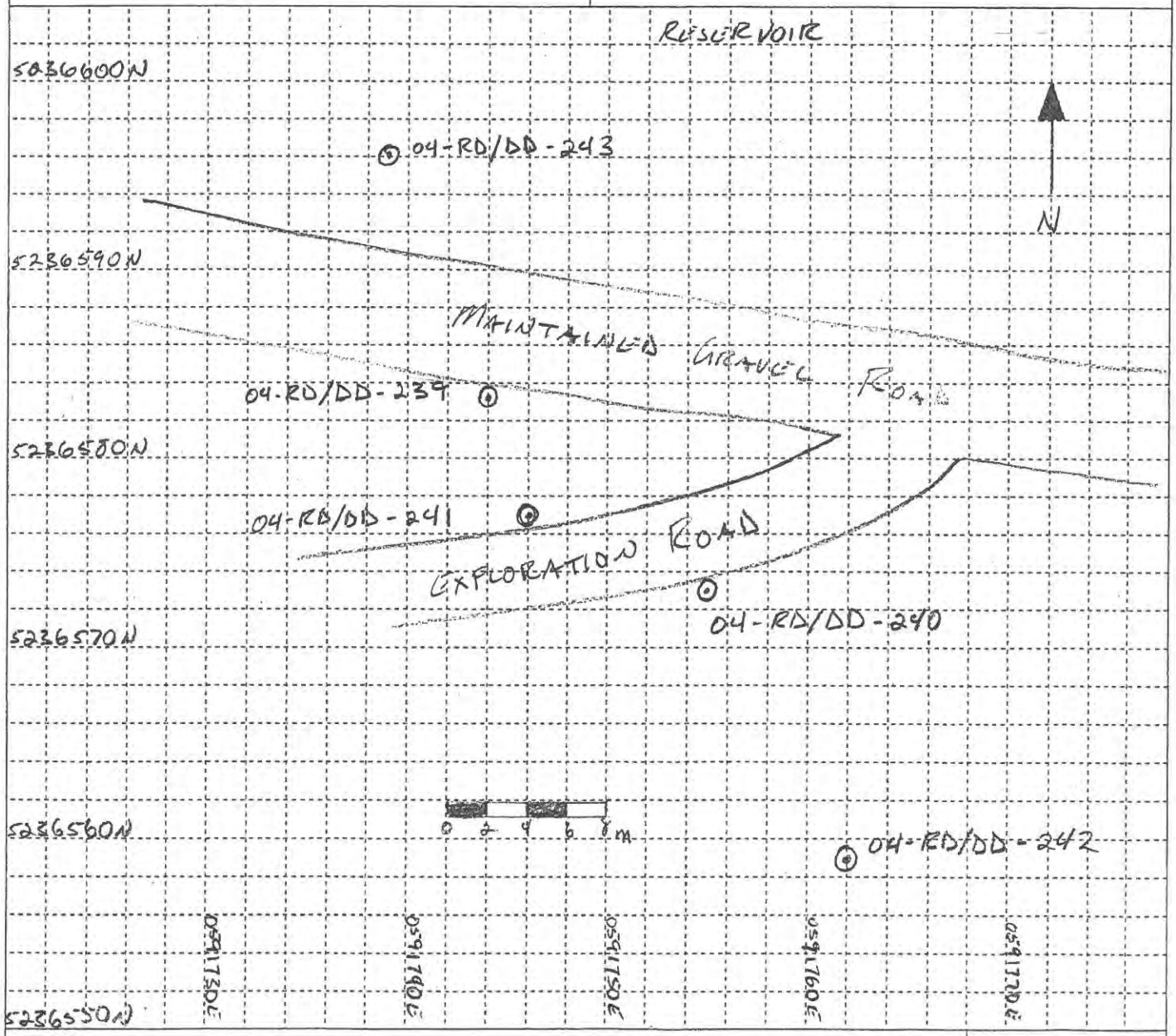

PROJECT: HHD CUTOFF WALL

HOLE NUMBER 04-RD/DD-241

ENG FORM 1836

DRILLING LOG (CONTINUATION SHEET)

ELEVATION TOP OF HOLE

HOLE NUMBER 04-RD/DS-241

PROJECT HHD CUTOFF WALL

INSTALLATION HOWARD HANSON DAM

SHEET 2 OF 2 SHEETS

ELEV (a)	DEPTH (b)	LEGEND (c)	CLASSIFICATION OF MATERIALS (Description) (d)	% CORE RECOVERY (e)	BOX OR SAMPLE NUMBER (f)	REMARKS (Drilling time, water loss, depth of weathering, etc. if significant) (g)
	0					
	5		DARK BROWN TO RUSTY BROWN, NON-COHESIVE, SANDY GRAVELS, CLAST MORPHOLOGY RANGES FROM ANGULAR TO ROUNDED (GP)	12"	A	SPT: 17/6" 13/6" 16/6"
				6"	B	SPT: 9/6" 11/6" 10/6"
				8"	C	SPT: 18/6" 23/6" 39/6"
	10			7"	D	SPT: 39/6" 50/5"
			DARK BROWN, LOW PLASTICITY, GRAVELLY SANDS; GRAVELS BECOME SCARCER DOWN SECTION (SP)	13"	E	SPT: 18/6" 16/6" 32/6"
	15			15"	F	SPT: 9/6" 12/6" 43/6"
				14"	G	SPT: 18/6" 8/6" 42/6"
	20			11"	H	SPT: 14/6" 18/6" 18/6"
			REDDISH BROWN, MODERATELY COHESIVE, CLAYEY, GRAVELLY, FINE SAND (SW-SC)	18"	I	SPT: 11/6" 17/6" 26/6"
	25					TOP OF ROCK @ 25.0'
			STRONGLY ALTERED, GRAY GREEN ANDESITE; A GHOST LIKE BRECCIA TEXTURE IS PRESENT IN MUCH OF THE CORE; ROCK IS WEAK (R2); FRACTURES MAY ALL BE MECHANICAL	93 83	1 1	
	30			100 100	2 1	LESS THAN 1 FRACTURE PER FOOT
	35			100 100	3 1,2	
	40		BOH @ 38.5'	Rec % / RQD %	Run # / Bx #	

ENG FORM 1836-A (ER 1110-1-1801)

PROJECT HHD CUTOFF WALL

HOLE NUMBER 04-RD/DS-241

HOLE NUMBER: 04-RD/DD-242

DRILLING LOG

DIVISION

INSTALLATION: HOWARD HANSON DAM

SHEET: 1 OF 2 SHEETS

1. PROJECT: HHD CUTOFF WALL	10. SIZE AND TYPE OF BIT: HWT/HQ
2. LOCATION (Coordinates or Station): 0591762E 5236559N	11. DATUM FOR ELEVATION SHOWN (TBM or MSL)
3. DRILLING AGENCY: CRUX SUBSURFACE INC	12. MANUFACTURER'S DESIGNATION OF DRILL: BURLEY 55-DD-1
4. HOLE NUMBER (As shown on drawing title and file number): 04-RD/DD-242	13. TOTAL NUMBER OF OVERBURDEN SAMPLES TAKEN: DISTURBED: 0 UNDISTURBED: 10
5. NAME OF DRILLER: MIKE STARKWA	14. TOTAL NUMBER OF CORE BOXES: 2 / 15. ELEVATION OF GROUNDWATER
6. DIRECTION OF HOLE: ☒ VERTICAL ☐ INCLINED _____ DEGREES FROM VERTICAL	16. DATE STARTED: 27 FEB 04 / DATE COMPLETED: 27 FEB 04
7. THICKNESS OF OVERBURDEN: 27.5'	17. ELEVATION TOP OF HOLE: ~1189 AMSL
8. DEPTH DRILLED INTO ROCK: 16.5'	18. TOTAL CORE RECOVERY FOR BORING: 98.2 %
9. TOTAL DEPTH OF HOLE: 44.0'	19. SIGNATURE OF INSPECTOR: Thomas J. Daniels
LOCATION SKETCH/COMMENTS	SCALE: 1:319.96

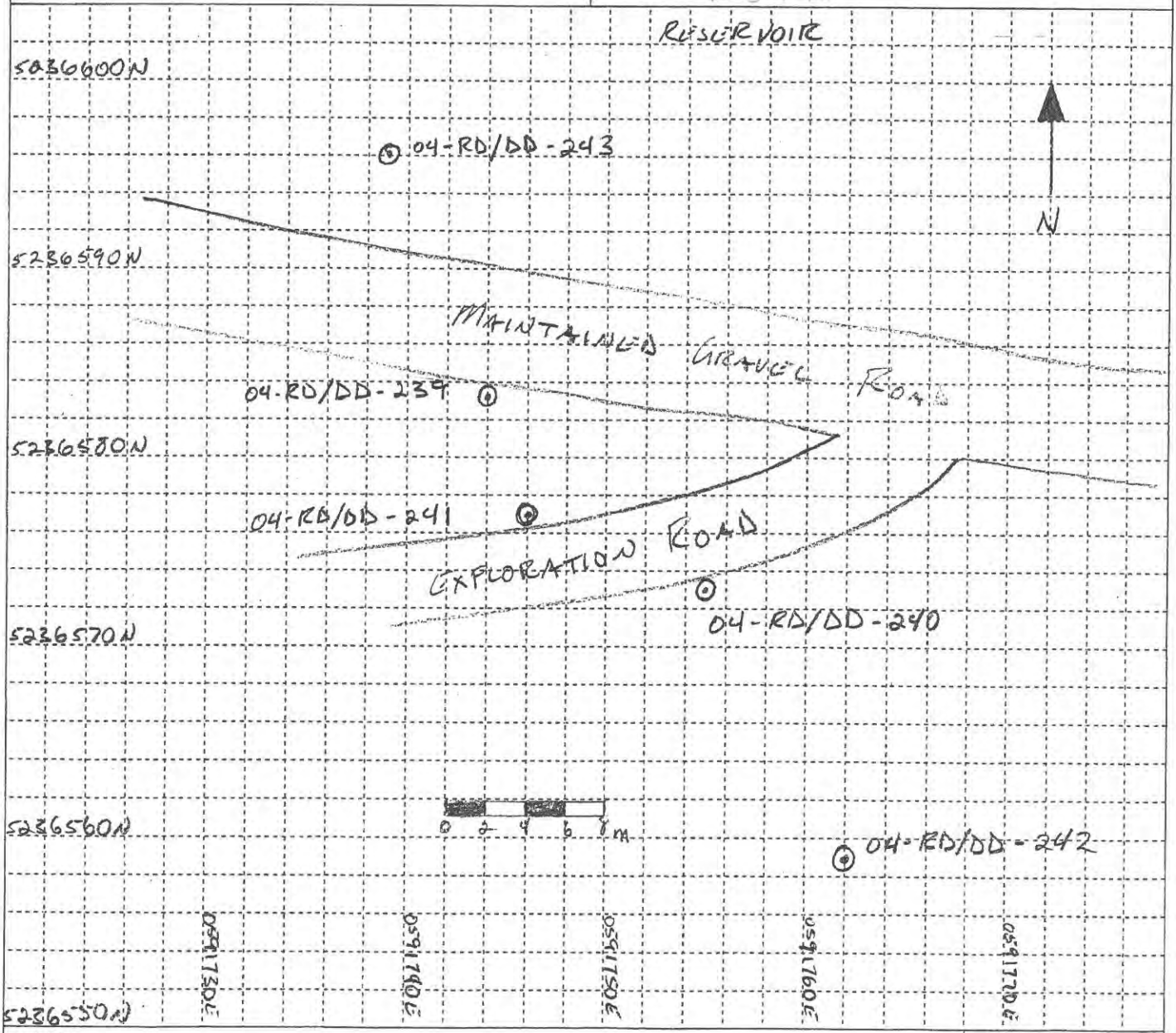

PROJECT: HHD CUTOFF WALL

HOLE NUMBER: 04-RD/DD-242

ENG FORM 1836

DRILLING LOG (CONTINUATION SHEET)

ELEVATION TOP OF HOLE	HOLE NUMBER
	04-RD/DD-242

PROJECT	INSTALLATION	SHEET
HHD CUTOFF WALL	HOWARD HANSON DAM	2 OF 2 SHEETS

ELEV (a)	DEPTH (b)	LEGEND (c)	CLASSIFICATION OF MATERIALS (Description) (d)	% CORE RECOVERY (e)	BOX OR SAMPLE NUMBER (f)	REMARKS (Drilling time, water loss, depth of weathering, etc. if significant) (g)
			MODERATELY WELL GRADED GRAVELS / SANDS (GW/SW)		A	SPT: 17/6" 24/6" 19/6"
	5		LOW TO MODERATE PLASTICITY SANDY SILTS AND SILTY SANDS (ML-SM, SM-ML)		B	SPT: 7/6" 7/6" 13/6"
				18"	C	SPT: 14/6" 23/6" 21/6"
	10			13"	D	SPT: 8/6" 8/6" 16/6"
				18"	E	SPT: 3/6" 3/6" 4/6"
	15			18"	F	SPT: 2/6" 2/6" 4/6"
			WELL GRADED, UNCOHESIVE, SILTY AND GRAVELLY SANDS SUGGESTIVE OF FILL (GW-SM)	12"	G	SPT: 8/6" 8/6" 8/6"
	20			12"	H	SPT: 8/6" 11/6" 12/6"
					I	SPT: 8/6" 21/6" 50/5"
	25				J	SPT: 50/6" 32/6" 39/6"
						TOP OF ROCK @ 27.5'
	30		GRAY/GREEN APHANITIC ANDESITE; STRONGLY ALTERED AND WEAK (R2), ALTERATION PRIMARILY CHLORITE AND CLAY REPLACEMENT W/ OXIDE STAINING ALONG SOME FRACTURES	80 53	1 1	1 FRACTURE PER FOOT
				100 94	2 1	
	35			100 100	3 1,2	NO FRACTURES
	40			100 100	4 2	
	45		BOH @ 41.0'	Rec % RQD %	Run # Bx #	

HOLE NUMBER
04-RD/DD-243

DRILLING LOG

DIVISION	INSTALLATION	SHEET
	HOWARD HANSON DAM	1 OF 2 SHEETS

1. PROJECT: HHD CUTOFF WALL	10. SIZE AND TYPE OF BIT: HWT / HQ
2. LOCATION (Coordinates or Station): 0591739 E 5236596 N	11. DATUM FOR ELEVATION SHOWN (TBM or MSL):
3. DRILLING AGENCY: CRUX SUBSURFACE INC	12. MANUFACTURER'S DESIGNATION OF DRILL: BURLEY 5500-1
4. HOLE NUMBER (As shown on drawing title and file number): 04-RD/DD-243	13. TOTAL NUMBER OF OVERBURDEN SAMPLES TAKEN — DISTURBED: Ø — UNDISTURBED: Ø
5. NAME OF DRILLER: MIKE STARLING	14. TOTAL NUMBER OF CORE BOXES: 3 — 15. ELEVATION OF GROUNDWATER:
6. DIRECTION OF HOLE: ☒ VERTICAL ☐ INCLINED ____ DEGREES FROM VERTICAL	16. DATE STARTED: 28 FEB 04 — DATE COMPLETED: 28 FEB 04
7. THICKNESS OF OVERBURDEN: 29	17. ELEVATION TOP OF HOLE: ~1156 AMSL
8. DEPTH DRILLED INTO ROCK: 21.5	18. TOTAL CORE RECOVERY FOR BORING: 91.8 %
9. TOTAL DEPTH OF HOLE: 24.4	19. SIGNATURE OF INSPECTOR: [signature]
LOCATION SKETCH/COMMENTS	SCALE: 1:314.96

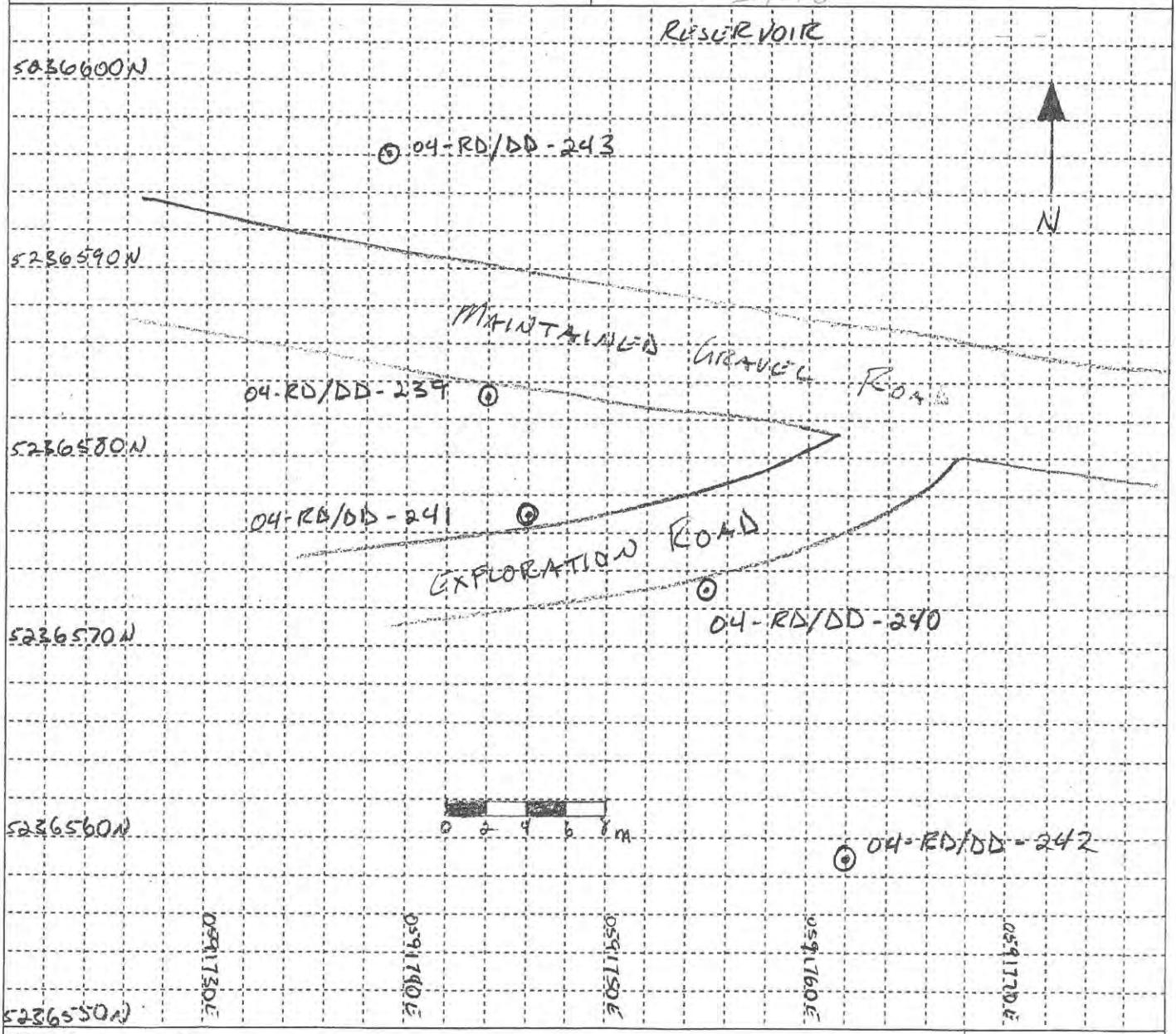

PROJECT	HOLE NUMBER
HHD CUTOFF WALL	04-RD/DD-243

ENG FORM 1836

DRILLING LOG (CONTINUATION SHEET)

PROJECT: HHD CUTOFF WALL	INSTALLATION: HOWARDS HUDSON DAM	ELEVATION TOP OF HOLE	HOLE NUMBER: 04-RD/DD-243
			SHEET: 2 OF 2 SHEETS

ELEV (a)	DEPTH (b)	LEGEND (c)	CLASSIFICATION OF MATERIALS (Description) (d)	% CORE RECOVERY (e)	BOX OR SAMPLE NUMBER (f)	REMARKS (Drilling time, water loss, depth of weathering, etc. if significant) (g)
	0		SOIL / WEATHERED ROCK (GrP)	64 0	1 1	TOP OF RUCK @ 2.9'
	5		* SEE NOTE			RUBBLE ZONE 6.1' - 6.6'
			GRAY GREEN APHANITIC ANDESITE, STRONGLY ALTERED AND WEAK (R2), STRONGLY WEATHERED IN	92 64	2 1	6" GOUGE SEAM @ 8.6'
	10		UPPER TWO FT, MOD TO STRG FRACTURING IN UPPER FIVE	102 84	3 1,2	
	15		FEET, ONE FRACTURE EVERY THREE FEET IN BOTTOM	102 100	4 2	
	20		SECTION, BRECCIATED APPEAR. DUE TO ALTERATION	100 100	5 2,3	
	25		BOH @ 29.4'	Rec % / RQD %	Run # / Bx #	
			+2.9' - 3.8' GRY/BRN, VERY WEAK MATERIAL (R0-R1) WHICH IS BISECTED BY 0.3' DARK GRAY TO BLACK, MODERATELY STRONG TO STRONG (R3-R4), HYPABYSSAL BASALT			

ENG FORM 1836-A (ER 1110-1-1801)	PROJECT: HHD CUTOFF W/ALL	HOLE NUMBER: 04-RD/DD-243

RECORD OF DRILLHOLE

SHEET 1 OF 3

BORING NO. 04-DD-244
PROJECT: AWC Exploration
PROJECT NO.:
LOCATION: HHD Outlet, Station 16+43

DRILLING DATE:
DRILLING CO.: JENSEN DRILLING
DRILL RIG:
DRILL METHOD:

DATUM:
COLLAR ELEV.:
INCLINATION: + 7.76° for horizontal
AZIMUTH: 28° Down stream

DEPTH SCALE (FEET)	DESCRIPTION	GRAPHIC LOG	RUN NO.	CORE RECOVERY (%)	RQD (%)	FRACTURES PER FOOT	TYPE AND SURFACE DESCRIPTION	JRC	GRAPHIC LOG	WEATHERING INDEX	STRENGTH INDEX	NOTES, WATER LEVELS, INSTRUMENTATION DRILLING FLUID	DEPTH SCALE (ELEV.)
0	Concrete - no rebar		1 BX 1									26 Aug 04 Start 0735 Stop 1025	0
1													1
2													2
3	Breccia / Andesite contact		2 BX 1				R, P, Grout	12	60	4	R3+	Drill sticking - pulled core Start 1107 Stop 1143	3
4	Andesite porphyry, gry/grn, mod. hard to hard		3 BX 1	5.0 / 5.0								Start 1155 Stop 1230	4
5													5
6	To mechanically fractured to be logged												6
7	Natural fractures are grout filled												7
8													8
9			4 BX 1									Start 1320 Stop 1340	9
10	Again extensive mechanical fracturing - Jensen will have slips here on the 27th												10
11			BX 2										11
12													12
13													13
14													14

DEPTH SCALE: 1" = 2'
DRILLER:

LOGGED BY: Tom Danielson
DATE:

J - Joint
F - Fault
S - Shear
B - Bedding
F - Foliation

Description: SM - Smooth, R - Rough, SL - Slickensided

Profile: ST - Stepped, U - Undulating, P - Planar

DISCONTINUITY DATA

RECORD OF DRILLHOLE

SHEET 2 OF 3

BORING NO. 04-DD-244
PROJECT: AWE Exploration
PROJECT NO.:
LOCATION: HHD outlet, Station 16+43

DRILLING DATE:
DRILLING CO.: Jensen Drilling
DRILL RIG:
DRILL METHOD:

DATUM:
COLLAR ELEV.:
INCLINATION: +1.76° from horizontal
AZIMUTH: 28° downstream

DEPTH SCALE (FEET)	DESCRIPTION	GRAPHIC LOG	RUN NO.	CORE RECOVERY (%)	RQD (%)	FRACTURES PER FOOT	TYPE AND SURFACE DESCRIPTION	JRC	GRAPHIC LOG	WEATHERING INDEX	STRENGTH INDEX	NOTES, WATER LEVELS, INSTRUMENTATION DRILLING FLUID	DEPTH SCALE (ELEV.)
14													14
15			5 13X 2									Start 1540 Stop 1540	15
16													16
17													17
18													18
19													19
20			6 13X 2									Start 1550 Stop	20
21													21
22													22
23													23
24													24
25			7 13X 3									Stop 1700	25
26													26
27													27
28													28

ROCK TYPE

J - Joint
F - Fault
S - Shear
B - Bedding
F - Foliation

Description
SM - Smooth
R - Rough
SL - Slickensided

Profile
ST - Stepped
U - Undulating
P - Planar

DISCONTINUITY DATA

DEPTH SCALE: 1" = 2'
DRILLER:

LOGGED BY: Tom Danielson
DATE:

RECORD OF DRILLHOLE

SHEET 3 OF 3

BORING NO. 04-DD-244
PROJECT: AWE EXPLORATION
PROJECT NO.:
LOCATION: HHD Outlet, Station 16+43

DRILLING DATE:
DRILLING CO.: Layne Drilling
DRILL RIG:
DRILL METHOD:

DATUM:
COLLAR ELEV.:
INCLINATION: +7-76° from horizontal
AZIMUTH: 28° downstream

DEPTH SCALE (FEET)	DESCRIPTION	GRAPHIC LOG	RUN NO.	CORE RECOVERY (%)	RQD (%)	FRACTURES PER FOOT	TYPE AND SURFACE DESCRIPTION	JRC	GRAPHIC LOG	WEATHERING INDEX	STRENGTH INDEX	NOTES, WATER LEVELS, INSTRUMENTATION DRILLING FLUID	DEPTH SCALE (ELEV.)
28													28
29													29
30			EOB @ 29.1'										30
31													31
32													32
33													33
34													34
35													35
36													36
37													37
38													38
39													39
40													40
41													41
42													42

ROCK TYPE

J - Joint
F - Fault
S - Shear
B - Bedding
F - Foliation

Description
SM - Smooth
R - Rough
SL - Slickensided

Profile
ST - Stepped
U - Undulating
P - Planar

DISCONTINUITY DATA

DEPTH SCALE: 1" = 2'
DRILLER:

LOGGED BY: Tom Danielson
DATE:

RECORD OF DRILLHOLE

SHEET 1 OF 2

BORING NO. 04-DD-245
PROJECT: AWC Exploration
PROJECT NO.:
LOCATION: HHD Outlet, Station 16+60

DRILLING DATE:
DRILLING CO.: Jensen Drilling
DRILL RIG:
DRILL METHOD:

DATUM:
COLLAR ELEV.:
INCLINATION: +8.8° from horizontal
AZIMUTH: 26° downstream

ROCK TYPE: J - Joint, F - Fault, S - Shear, B - Bedding, F - Foliation
Description: SM - Smooth, R - Rough, SL - Slickensided
Profile: ST - Stepped, U - Undulating, P - Planar

DEPTH SCALE (FEET)	DESCRIPTION	GRAPHIC LOG	RUN NO.	CORE RECOVERY (%)	RQD (%)	FRACTURES PER FOOT	DISCONTINUITY DATA: TYPE AND SURFACE DESCRIPTION	JRC	GRAPHIC LOG	WEATHERING INDEX	STRENGTH INDEX	NOTES, WATER LEVELS, INSTRUMENTATION DRILLING FLUID	DEPTH SCALE (ELEV.)
0	Concrete rebar @ 0.6'		1 BX 1.									24 Aug 04 Start 1255 Stop 1305 24/08 Start 09:15 Stop	0
1			RD BX 1										1
2													2
3	andesitic porphyry		3 BX 1	5-0 / 5-0	2-5 / 5-0		R,P	8	45			Start 1240	3
4							R,P, Ch	8	60				4
5							R,P, Fe R,P	10 10	75 60	U	R3		5
6							R,P, Ch	8	30				6
7							R,P, Ch, Fe R,U, Ca w/ 1.5mm sticks R,P, Ca	10 12	30 90 60				7
8			4									Start 1340 Stop 1400	8
9	Run												9
10													10
11													11
12													12
13	Run 5						S,P, Ca ~2mm	6	60				13
14			6										14

DEPTH SCALE: 1" = 2'
DRILLER:

LOGGED BY: Tom Danielson
DATE:

RECORD OF DRILLHOLE

SHEET 2 OF 2

BORING NO. 04-DD-245
PROJECT: AWE exploration
PROJECT NO.:
LOCATION: HHD Outlet, Station 66+60

DRILLING DATE:
DRILLING CO.: DESIGN DRILLING
DRILL RIG:
DRILL METHOD:

DATUM:
COLLAR ELEV.:
INCLINATION: +8.81° from horizontal
AZIMUTH: 26° downstream

DEPTH SCALE (FEET)	DESCRIPTION	GRAPHIC LOG	RUN NO.	CORE RECOVERY (%)	RQD (%)	FRACTURES PER FOOT	DISCONTINUITY DATA: TYPE AND SURFACE DESCRIPTION	JRC	GRAPHIC LOG	WEATHERING INDEX	STRENGTH INDEX	NOTES, WATER LEVELS, INSTRUMENTATION DRILLING FLUID	DEPTH SCALE (ELEV.)
14	Andesitic Porphyry			5.0								Start 1440	14
15				5.0								Stop 1500	15
							R, P, Cu	12	30				
16							R, P, Cu	12	30				16
							R, P, Fe	10	45				
							R, P, Ca	10	45				
17							R, P, Cu	12	60				17
							R, P	8	90			gouge	
							R, P, Cu	10	30				
18							R, P, Ca < 2mm	12	50				18
			↓									Start 1510	
19												Stop 1535	19
20													20
21													21
22													22
23													23
				BOB @ 23.5' 26 Aug 04 @ 1535									24
24													
25													25
26													26
27													27
28													

J - Joint
F - Fault
S - Shear
B - Bedding
F - Foliation

Description: SM - Smooth, R - Rough, SL - Slickensided

Profile: ST - Stepped, U - Undulating, P - Planar

DEPTH SCALE:
DRILLER:
LOGGED BY:
DATE:

RECORD OF DRILLHOLE

SHEET 1 OF 6

BORING NO. 04-DD-246
PROJECT: AWC Exploration
PROJECT NO.:
LOCATION: HHD Outlet, Station 16+95

DRILLING DATE:
DRILLING CO.: Swisen Drilling
DRILL RIG: Longyear 38
DRILL METHOD: HQ core

DATUM:
COLLAR ELEV.:
INCLINATION: -5.1° from horizontal
AZIMUTH: 65° upstream

ROCK TYPE: J - Joint; F - Fault; S - Shear; B - Bedding; F - Foliation
Description: SM - Smooth; R - Rough; SL - Slickensided
Profile: ST - Stepped; U - Undulating; P - Planar

DEPTH SCALE (FEET)	DESCRIPTION	GRAPHIC LOG	RUN NO.	CORE RECOVERY (%)	RQD (%)	FRACTURES PER FOOT	DISCONTINUITY DATA: TYPE AND SURFACE DESCRIPTION	DISCONTINUITY DATA: JRC	DISCONTINUITY DATA: GRAPHIC LOG	WEATHERING INDEX	STRENGTH INDEX	NOTES, WATER LEVELS, INSTRUMENTATION DRILLING FLUID	DEPTH SCALE (ELEV.)
0												27 Aug 04	0
1	Concrete rebar @ 1.5' #4 or #5		1 13"	5.0/5.0								Start 1320 Stop 1410	1
2													2
3													3
4													4
5													5
6	concrete rebar @ 5.2' and 5.7' #10 or #11		2 BX 1	1.3/1.3								Start 1415 Stop 1435	6
7			3 BX 1	5.0/5.0	5.0/5.0							Start 1445 Stop 1505	7
8	andesite porphyry			100%	100%					U	R 3-4		8
9													9
10													10
11			BX 2				S,P, rock?	6	50				11
12	andesite (to dacite?) porphyry, hard, grey, largely unaltered (abundant fresh feldspar), very much fractured (from drilling or original joints?)		4 BX 2	5.0/5.0	1.6/5.0				80-90			Start 1315 Stop	12
13				100%	32%		R, S R, P, Ch or IL	12 12	60	U	R3		13
14													14

DEPTH SCALE: 1" = 2'
DRILLER:

LOGGED BY: Tom Danielson
DATE:

RECORD OF DRILLHOLE

SHEET 2 OF 6

BORING NO. 04-DD-246
PROJECT: AWE Exploration
PROJECT NO.:
LOCATION: HHD Outlet, Station 16+95

DRILLING DATE:
DRILLING CO.: Jensen Drilling
DRILL RIG: Longyear 38
DRILL METHOD: HQ core

DATUM:
COLLAR ELEV.:
INCLINATION: -5.11° from horizontal
AZIMUTH: 68° upstream

DEPTH SCALE (FEET)	DESCRIPTION	GRAPHIC LOG	RUN NO.	CORE RECOVERY (%)	RQD (%)	FRACTURES PER FOOT	DISCONTINUITY DATA: TYPE AND SURFACE DESCRIPTION	JRC	GRAPHIC LOG	WEATHERING INDEX	STRENGTH INDEX	NOTES, WATER LEVELS, INSTRUMENTATION DRILLING FLUID	DEPTH SCALE (ELEV.)
14							R, P, ch, Fe	10	60				14
15													15
16							S, P, Fe	6	35				16
17			5 RX 2	5.0 / 5.0			R, P, Fe	10	70			Start 1535 Stop 1600	17
							rubble zone		XXXX				
							R, P, Fe	8	35		R3- 4		
18							R, P, Fe	12	55				18
							R, P, Ca ~ 1.5 mm	10					
							R, P, Fe, Ca ~ 1 mm	10	60				
19							c, P, Ch veinlet	10	60				19
							R, P,	12	70				
20													20
21			RX 3										21
22	andesite to dacite porphyry, hard, grey, unaltered to mildly altered		6 RX 3	5.0 / 5.0	3.1 / 5.0							Start 1615 Stop 1635	22
							S, P, Fe	8	50				
23				100%	62%					U	R3- 4		23
							R, P, Fe	8	35				
24							R, P, Fe	10	55				24
									60				
25							R, U,	12					25
							R, P, Ca ~ 1 mm		60				
26							R, P	8	50			Finished for 27 Aug @ 1700	26
	Core loss from 26.3 - 26.5' (started on 27/08, restarted on 28/08)		7 RX 3	4.8 / 5.0	4.0 / 5.0							Start 0500 Stop 0830 August 28	
27				96%	80%								27
							R, P, Fe, Ca ~ 0.5 mm	12	60				
28							R, P, Ca	10	20				28

DEPTH SCALE: 1" = 2'
DRILLER:

LOGGED BY: Tom Danielson
DATE:

RECORD OF DRILLHOLE

SHEET 3 OF 6

BORING NO. 04-DD-246
PROJECT: AWC Exploration
PROJECT NO.:
LOCATION: HHD Outlet, Sta. 16+95

DRILLING DATE:
DRILLING CO.: Jensen Drilling
DRILL RIG: Longyear 38
DRILL METHOD: HQ core

DATUM:
COLLAR ELEV.:
INCLINATION: +5.11 fm horizontal
AZIMUTH: 68° upstream

J - Joint, F - Fault, S - Shear, B - Bedding, F - Foliation
Description: SM - Smooth, R - Rough, SL - Slickensided
Profile: ST - Stepped, U - Undulating, P - Planar

DEPTH SCALE (FEET)	ROCK TYPE: DESCRIPTION	GRAPHIC LOG	RUN NO.	CORE RECOVERY (%)	RQD (%)	FRACTURES PER FOOT	DISCONTINUITY DATA: TYPE AND SURFACE DESCRIPTION	JRC	GRAPHIC LOG	WEATHERING INDEX	STRENGTH INDEX	NOTES, WATER LEVELS, INSTRUMENTATION DRILLING FLUID	DEPTH SCALE (ELEV.)
28							R,P,Ca	8	60				28
							R,P,Ca <1mm	10	55				
29							S,P,Ca <1mm	6	30				29
30													30
31							R,P	8	35				31
			8 BX 4	5.0/5.0	4.0/5.0							start 0855 stop 0920	
32							R,P	10	45				32
					80%		R,P,Ch or IL into host, relatively soft	10	60	U	R4		
33							R,P, same alt, Py to 2mm (crystals)	10	60				33
34							R,U,Ca	14					34
							R,P,Fe	10	45				
35							R,P,Ca <1mm	8	25				35
									30				
36							R,P,Ca	F	30				36
	andesite porphyry		9 BX 4	5.0/5.0	4.4/5.0						UR4	start 0930 stop 0950	
37	andesite breccia				88%		S,U,Ca <1mm	10	10				37
							R,P,ch, some rubble	12	50				
38							R,P, trace slicks	10	45	U	R3		38
39							R,P,Ca	8	25				39
							R,U,IL(?)	14	25				
40													40
41	Peled up in run 1			5.0									41
			10 BX 5	~~4.7~~ 5.0	4.7							start 0955 ~~stop 10~~	
42													42

DEPTH SCALE: 1" = 2'
DRILLER:
LOGGED BY: Tom Danielson
DATE:

SHANNON & WILSON, INC.

RECORD OF DRILLHOLE

SHEET 4 OF 6

BORING NO. 04-DD-246
PROJECT: AWE Exploration
PROJECT NO.:
LOCATION: HHD Outlet, Station 16+95

DRILLING DATE:
DRILLING CO.: Jensen Drilling
DRILL RIG: Longyear 38
DRILL METHOD: HQ core

DATUM:
COLLAR ELEV.:
INCLINATION: -5, 11.0 fm horizontal
AZIMUTH: 68° upstream

DEPTH SCALE (FEET)	DESCRIPTION	GRAPHIC LOG	RUN NO.	CORE RECOVERY (%)	RQD (%)	FRACTURES PER FOOT	TYPE AND SURFACE DESCRIPTION	JRC	GRAPHIC LOG	WEATHERING INDEX	STRENGTH INDEX	NOTES, WATER LEVELS, INSTRUMENTATION DRILLING FLUID	DEPTH SCALE (ELEV.)
42													42
43										U	R2 S		43
44							R, P, trace slicks	10	30				44
45													45
46							R, P,	12	40				46
							F, P	10	60				
	andesite breccia gry, grn, smaller clasts		11 BX 5	5.0 / 5.0	4.2 / 5.0		R, P, Ca	10	30			start 1135	
47							R, P,	12	30			stop 1050	47
							R, P, Fe veneer	10	0				
							R, P, Ca ~1.5 mm	10	30				
48											R2.5		48
					84%					U	3		
49													49
							R, P, Ca, Fe	12	50				
50													50
	transition to a largely aphanitic andesite						R, P, Ca	12	50				
51													51
			12 BX 6	4.7 / 5.0	4.1 / 5.0							start 1100	
52												stop 1115	52
				94%	82%					U	R3		
53													53
							R, P, sticks	10	40				
54							R, P, Ca, sticks	12	50				54
							R, P,	10	40				
55													55
56													56

ROCK TYPE

J - Joint
F - Fault
S - Shear
B - Bedding
F - Foliation

Description
SM - Smooth
R - Rough
SL - Slickensided

Profile
ST - Stepped
U - Undulating
P - Planar

DISCONTINUITY DATA

DEPTH SCALE: 1" = 2'
DRILLER:

LOGGED BY: Tom Danielson
DATE:

RECORD OF DRILLHOLE

SHEET 5 OF 6

BORING NO. 04-DD-246
PROJECT: AWC Exploration
PROJECT NO.:
LOCATION: HHD outlet, station 16+95

DRILLING DATE:
DRILLING CO.: Jensen Drilling
DRILL RIG: Longyear 38
DRILL METHOD: HQ core

DATUM:
COLLAR ELEV.:
INCLINATION: +5.11° fm horizontal
AZIMUTH: 68° upstream

DEPTH SCALE (FEET)	DESCRIPTION	GRAPHIC LOG	RUN NO.	CORE RECOVERY (%)	RQD (%)	FRACTURES PER FOOT	TYPE AND SURFACE DESCRIPTION	JRC	GRAPHIC LOG	WEATHERING INDEX	STRENGTH INDEX	NOTES, WATER LEVELS, INSTRUMENTATION DRILLING FLUID	DEPTH SCALE (ELEV.)
56													56
57			13 BX 6									start 1200 stop 1215	57
58										U	R2.5? 3		58
59													59
60							R,P,Ca ~2mm	12	30				60
							BP,Ca	10	30				
61													61
62	aphanitic andesite medium gray		14 BX 7	5.0 5.0	3.9		R,P	12	20			start 1234 stop 1236	62
							R,U,Fe<1mm	14	70				
63					78%				40	U	R2.5		63
64									80				64
65													65
66													66
67			15 BX 7	5.0 5.0			R,P,Ca<1mm	10	05			start 1247 stop 1300	67
							R,P,Fe	12	10				
68													68
69													69
70													70

DEPTH SCALE: 1" = 2'
DRILLER:

LOGGED BY: Tom Danielson
DATE:

RECORD OF DRILLHOLE

SHEET 6 OF 6

BORING NO. 04-DD-846
PROJECT: AWC Exploration
PROJECT NO.:
LOCATION: HHD Outlet, Sta. 16+95

DRILLING DATE:
DRILLING CO.: Jensen Drilling
DRILL RIG: Longyear 38
DRILL METHOD: HQ core

DATUM:
COLLAR ELEV.:
INCLINATION: +5.1° fm. horizontal
AZIMUTH: 68° upstream

DEPTH SCALE (FEET)	DESCRIPTION	ROCK TYPE / GRAPHIC LOG	RUN NO.	CORE RECOVERY (%)	RQD (%)	FRACTURES PER FOOT	DISCONTINUITY DATA: TYPE AND SURFACE DESCRIPTION	JRC	GRAPHIC LOG	WEATHERING INDEX	STRENGTH INDEX	NOTES, WATER LEVELS, INSTRUMENTATION DRILLING FLUID	DEPTH SCALE (ELEV.)
71	andesite breccia		16 BX 8	4.7 / 5.0	4.7							start 1310	71
72												stop 1325	72
73										U	R2.5 -3		73
74													74
75							R, P, Fe	12	45				75
76													76
77			17 BX 8	5.3 / 5.0	5.5 / 5.3							start 1355 stop 1415	77
78										U	R2.5 -3		78
79					100%								79
80													80
81													81
82			BOB @ 813' @ 1415 August 28, 04										82
83													83
84													84
85													85

J - Joint; F - Fault; S - Shear; B - Bedding; F - Foliation
Description: SM - Smooth; R - Rough; SL - Slickensided
Profile: ST - Stepped; U - Undulating; P - Planar

DEPTH SCALE:
DRILLER:
LOGGED BY:
DATE:

DRILLING LOG

DIVISION: Seattle District

INSTALLATION: Howard Hanson Dam

SHEET 1 OF 8 SHEETS

1. PROJECT: Site Exploration
2. LOCATION (Coordinates or Station): Howard Hanson Dam
3. DRILLING AGENCY: Gregory Drilling
4. HOLE NO. (As shown on drawing title and file number): 04-DD-247
5. NAME OF DRILLER: Chris Gregory
6. DIRECTION OF HOLE: [X] VERTICAL [ ] INCLINED _____ DEG. FROM VERT.
7. THICKNESS OF OVERBURDEN: 0
8. DEPTH DRILLED INTO ROCK: 104
9. TOTAL DEPTH OF HOLE: 104.0
10. SIZE AND TYPE OF BIT: HQ-3
11. DATUM FOR ELEVATION SHOWN (TBM or MSL): MSL
12. MANUFACTURES'S DESIGNATION OF DRILL: CME 850
13. TOTAL NO. OF OVER-BURDEN SAMPLES TAKEN: DISTURBED: UNDISTURBED:
14. TOTAL NUMBER CORE BOXES: 11
15. ELEVATION GROUND WATER:
16. DATE HOLE: STARTED 20 July 04 COMPLETED 21 July 04
17. ELEVATION TOP OF HOLE: 1148.0
18. TOTAL CORE RECOVERY FOR BORING: 99 %
19. SIGNATURE OF INSPECTOR: Tom Danielson

ELEVATION a	DEPTH b	LEGEND c	CLASSIFICATION OF MATERIALS (Description) d	% CORE RECOV-ERY e	BOX OR SAMPLE NO. f	RQD g	FRAC-TURES h	REMARKS (Drilling time, water loss, depth weathering, etc., if significant) i
			Pyroclastic.	95%	Run 1 Box 1 0.0 4.0	97%	0 20 15 5 5	Start 0650 Stop 0715
1146	2							
1144	4			100%	Run 2 Box 1 4.0 9.0	98%	5 20	Start 0725 Stop 0750
1142	6							
1140	8							
				91%	Run 3 Box 2 9.0 12.3	87%	25	Start 0800 Stop 0815
1138	10							
1136	12			100%	Run 4 Box 2 12.3 14.0	100%	60 25 60	Start 0825 Stop 0835
1134	14							

DRILLING LOG

DIVISION: Seattle District

INSTALLATION: Howard Hanson Dam

SHEET 2 OF 8 SHEETS

1. PROJECT: Site Exploration
2. LOCATION (Coordinates or Station): Howard Hanson Dam
3. DRILLING AGENCY: Gregory Drilling
4. HOLE NO. (As shown on drawing title and file number): 04-DD-247
5. NAME OF DRILLER: Chris Gregory
6. DIRECTION OF HOLE: [X] VERTICAL [ ] INCLINED _____ DEG. FROM VERT.
7. THICKNESS OF OVERBURDEN: 0
8. DEPTH DRILLED INTO ROCK: 104
9. TOTAL DEPTH OF HOLE: 104.0
10. SIZE AND TYPE OF BIT: HQ-3
11. DATUM FOR ELEVATION SHOWN (TBM or MSL): MSL
12. MANUFACTURES'S DESIGNATION OF DRILL: CME 850
13. TOTAL NO. OF OVER-BURDEN SAMPLES TAKEN: DISTURBED: UNDISTURBED:
14. TOTAL NUMBER CORE BOXES: 11
15. ELEVATION GROUND WATER:
16. DATE HOLE: STARTED 20 July 04 COMPLETED 21 July 04
17. ELEVATION TOP OF HOLE: 1148.0
18. TOTAL CORE RECOVERY FOR BORING: 99 %
19. SIGNATURE OF INSPECTOR: Tom Danielson

ELEVATION a	DEPTH b	LEGEND c	CLASSIFICATION OF MATERIALS (Description) d	% CORE RECOV-ERY e	BOX OR SAMPLE NO. f	RQD g	FRAC-TURES h	REMARKS (Drilling time, water loss, depth weathering, etc., if significant) i
			Andesite, strongly altered with chlorite and calcite stringers and along fractures, stringers up to 2mm. Transition to Basalt at Run 5 (dense, hard, aphanitic).	100%	Run 5 Box 2 14.0 16.0	30%	60 60 60 35 45 60	Start 0845 Stop 0905
1132	16			100%	Run 6 Box 2 16.0 19.0	67%	35 45 45 35 30 40	Start 0930 Stop 0940
1130	18							
1128	20			100%	Run 7 Box 3 19.0 24.0	76%	25 35 50 55 65 35 35 35	Start 0950 Stop 1005
1126	22							
1124	24			100%	Run 8 Box 3 24.0 29.0	40%	10 85 0 0 15 80 30 5 30 40	Start 1020 Stop 1050
1122	26							
1120	28							

DRILLING LOG

DIVISION: Seattle District

INSTALLATION: Howard Hanson Dam

SHEET 3 OF 8 SHEETS

1. PROJECT: Site Exploration
2. LOCATION (Coordinates or Station): Howard Hanson Dam
3. DRILLING AGENCY: Gregory Drilling
4. HOLE NO. (As shown on drawing title and file number): 04-DD-247
5. NAME OF DRILLER: Chris Gregory
6. DIRECTION OF HOLE: [X] VERTICAL [ ] INCLINED _____ DEG. FROM VERT.
7. THICKNESS OF OVERBURDEN: 0
8. DEPTH DRILLED INTO ROCK: 104
9. TOTAL DEPTH OF HOLE: 104.0
10. SIZE AND TYPE OF BIT: HQ-3
11. DATUM FOR ELEVATION SHOWN (TBM or MSL): MSL
12. MANUFACTURES'S DESIGNATION OF DRILL: CME 850
13. TOTAL NO. OF OVER-BURDEN SAMPLES TAKEN: DISTURBED: ; UNDISTURBED:
14. TOTAL NUMBER CORE BOXES: 11
15. ELEVATION GROUND WATER:
16. DATE HOLE: STARTED 20 July 04; COMPLETED 21 July 04
17. ELEVATION TOP OF HOLE: 1148.0
18. TOTAL CORE RECOVERY FOR BORING: 99 %
19. SIGNATURE OF INSPECTOR: Tom Danielson

ELEVATION a	DEPTH b	LEGEND c	CLASSIFICATION OF MATERIALS (Description) d	% CORE RECOVERY e	BOX OR SAMPLE NO. f	RQD g	FRACTURES h	REMARKS (Drilling time, water loss, depth weathering, etc., if significant) i
							60 55 65	
				94%	Run 9 Box 4 29.0 34.0	81%	0 35 15 60 20 60 30 60 30	Start 1055 Stop 1115
1118	30		29.5-31': Breccia in a preferentially altering matrix.					
1116	32							
1114	34		Aphanitic Basalt.	100%	Run 10 Box 4 34.0 38.0	67%	55 60 60 55 30 35 30 65	Start 1125 Stop 1145
1112	36							
1110	38			100%	Run 11 Box 4 38.0 39.0	50%	35 65	Start 1150 Stop 1155
1108	40			100%	Run 12 Box 5 39.0 43.3	37%	10 30	Start 1200 Stop 1220
1106	42		Came out of core barrel as incoherent. Unable to log.					

DRILLING LOG

DIVISION: Seattle District

INSTALLATION: Howard Hanson Dam

SHEET 4 OF 8 SHEETS

1. PROJECT: Site Exploration
2. LOCATION (Coordinates or Station): Howard Hanson Dam
3. DRILLING AGENCY: Gregory Drilling
4. HOLE NO. (As shown on drawing title and file number): 04-DD-247
5. NAME OF DRILLER: Chris Gregory
6. DIRECTION OF HOLE: [X] VERTICAL [ ] INCLINED _____ DEG. FROM VERT.
7. THICKNESS OF OVERBURDEN: 0
8. DEPTH DRILLED INTO ROCK: 104
9. TOTAL DEPTH OF HOLE: 104.0
10. SIZE AND TYPE OF BIT: HQ-3
11. DATUM FOR ELEVATION SHOWN (TBM or MSL): MSL
12. MANUFACTURES'S DESIGNATION OF DRILL: CME 850
13. TOTAL NO. OF OVER-BURDEN SAMPLES TAKEN: DISTURBED: UNDISTURBED:
14. TOTAL NUMBER CORE BOXES: 11
15. ELEVATION GROUND WATER:
16. DATE HOLE: STARTED 20 July 04 COMPLETED 21 July 04
17. ELEVATION TOP OF HOLE: 1148.0
18. TOTAL CORE RECOVERY FOR BORING: 99 %
19. SIGNATURE OF INSPECTOR: Tom Danielson

ELEVATION a	DEPTH b	LEGEND c	CLASSIFICATION OF MATERIALS (Description) d	% CORE RECOV-ERY e	BOX OR SAMPLE NO. f	RQD g	FRAC-TURES h	REMARKS (Drilling time, water loss, depth weathering, etc., if significant) i
1104	44			100%	Run 13 Box 5 43.3	100%		Start 1230 Stop 1240
				100%	44.0 Run 14 Box 5 44.0 49.0	88%	15 25 35 15 60 35 55 25	Start 1245 Stop 1300
1102	46							
1100	48		Calcite in filling. Basalt; aphanitic to porphyritic.	100%	Run 15 Box 6 49.0 51.1	100%	60	Start 1305 Stop 1315
1098	50							
1096	52		Blocked off at 51.1', non-plastic silty material. Gray, medium to fine grained matrix (sand?) with large rounded fragments.	100%	Run 16 Box 6 51.1 54.0	86%	20 10	Start 1330 Stop 1425 Losing some circulation at 53'.
1094	54		Transition to Basaltic Andesite.	100%	Run 17 Box 6 54.0 59.0	100%		Start 1430 Stop 1450
1092	56		55.3-55.6': Zone of brecciation subsequently annealed with Ca, Ch, Py.				0	

DRILLING LOG

DIVISION: Seattle District

INSTALLATION: Howard Hanson Dam

SHEET 5 OF 8 SHEETS

1. PROJECT: Site Exploration
2. LOCATION (Coordinates or Station): Howard Hanson Dam
3. DRILLING AGENCY: Gregory Drilling
4. HOLE NO. (As shown on drawing title and file number): 04-DD-247
5. NAME OF DRILLER: Chris Gregory
6. DIRECTION OF HOLE: [X] VERTICAL [ ] INCLINED _____ DEG. FROM VERT.
7. THICKNESS OF OVERBURDEN: 0
8. DEPTH DRILLED INTO ROCK: 104
9. TOTAL DEPTH OF HOLE: 104.0
10. SIZE AND TYPE OF BIT: HQ-3
11. DATUM FOR ELEVATION SHOWN (TBM or MSL): MSL
12. MANUFACTURES'S DESIGNATION OF DRILL: CME 850
13. TOTAL NO. OF OVER-BURDEN SAMPLES TAKEN: DISTURBED: UNDISTURBED:
14. TOTAL NUMBER CORE BOXES: 11
15. ELEVATION GROUND WATER:
16. DATE HOLE: STARTED 20 July 04 COMPLETED 21 July 04
17. ELEVATION TOP OF HOLE: 1148.0
18. TOTAL CORE RECOVERY FOR BORING: 99 %
19. SIGNATURE OF INSPECTOR: Tom Danielson

ELEVATION a	DEPTH b	LEGEND c	CLASSIFICATION OF MATERIALS (Description) d	% CORE RECOV-ERY e	BOX OR SAMPLE NO. f	RQD g	FRAC-TURES h	REMARKS (Drilling time, water loss, depth weathering, etc., if significant) i
			Calcite stringers up to 4mm.				30	
			57-57.6': Zone of Brecciation subsequently annealed with calcite and chlorite.					
1090	58						35	
				100%	Run 18 Box 7 59.0 64.0	95%	5	Start 1520 Stop 1545
			~ 2cm gap in rock suggests presence of silty material washed out.				20 15	
1088	60							
							0	
1086	62		Presence of xenoliths/breccia fragments.					
1084	64			100%	Run 19 Box 7 64.0 69.0	95%	5	Start 1555 Stop
			Transition to Andesite.					
1082	66		Annealed breccia zone.					
							5	
1080	68							
			Andesite.	100%	Run 20 Box 8 69.0 74.0	74%	10 10 0	Start Stop 1650
1078	70							

DRILLING LOG

DIVISION: Seattle District

INSTALLATION: Howard Hanson Dam

SHEET 6 OF 8 SHEETS

1. PROJECT: Site Exploration
2. LOCATION (Coordinates or Station): Howard Hanson Dam
3. DRILLING AGENCY: Gregory Drilling
4. HOLE NO. (As shown on drawing title and file number): 04-DD-247
5. NAME OF DRILLER: Chris Gregory
6. DIRECTION OF HOLE: [X] VERTICAL [ ] INCLINED _____ DEG. FROM VERT.
7. THICKNESS OF OVERBURDEN: 0
8. DEPTH DRILLED INTO ROCK: 104
9. TOTAL DEPTH OF HOLE: 104.0
10. SIZE AND TYPE OF BIT: HQ-3
11. DATUM FOR ELEVATION SHOWN (TBM or MSL): MSL
12. MANUFACTURES'S DESIGNATION OF DRILL: CME 850
13. TOTAL NO. OF OVER-BURDEN SAMPLES TAKEN: DISTURBED: UNDISTURBED:
14. TOTAL NUMBER CORE BOXES: 11
15. ELEVATION GROUND WATER:
16. DATE HOLE: STARTED 20 July 04 COMPLETED 21 July 04
17. ELEVATION TOP OF HOLE: 1148.0
18. TOTAL CORE RECOVERY FOR BORING: 99 %
19. SIGNATURE OF INSPECTOR: Tom Danielson

ELEVATION a	DEPTH b	LEGEND c	CLASSIFICATION OF MATERIALS (Description) d	% CORE RECOV-ERY e	BOX OR SAMPLE NO. f	RQD g	FRAC-TURES h	REMARKS (Drilling time, water loss, depth weathering, etc., if significant) i
1076	72						25 5 25 25 25 20	
1074	74		Andesite with abundant breccia fragments (<4mm to >10cm).	100%	Run 21 Box 8 74.0 79.0	96%		21 July 04 Start 0630 Stop 0655
1072	76		Calcite stringer ~4mm from 74-77'.					
1070	78						10 15	
1068	80			100%	Run 22 Box 9 79.0 84.0	82%	20 60	Start 0705 Stop 0725
1066	82						5 25 30 60 35	
1064	84						15	

DRILLING LOG

DIVISION: Seattle District

INSTALLATION: Howard Hanson Dam

SHEET 7 OF 8 SHEETS

1. PROJECT: Site Exploration
2. LOCATION (Coordinates or Station): Howard Hanson Dam
3. DRILLING AGENCY: Gregory Drilling
4. HOLE NO. (As shown on drawing title and file number): 04-DD-247
5. NAME OF DRILLER: Chris Gregory
6. DIRECTION OF HOLE: [X] VERTICAL [ ] INCLINED _____ DEG. FROM VERT.
7. THICKNESS OF OVERBURDEN: 0
8. DEPTH DRILLED INTO ROCK: 104
9. TOTAL DEPTH OF HOLE: 104.0
10. SIZE AND TYPE OF BIT: HQ-3
11. DATUM FOR ELEVATION SHOWN (TBM or MSL): MSL
12. MANUFACTURES'S DESIGNATION OF DRILL: CME 850
13. TOTAL NO. OF OVER-BURDEN SAMPLES TAKEN: DISTURBED: ; UNDISTURBED:
14. TOTAL NUMBER CORE BOXES: 11
15. ELEVATION GROUND WATER:
16. DATE HOLE: STARTED 20 July 04; COMPLETED 21 July 04
17. ELEVATION TOP OF HOLE: 1148.0
18. TOTAL CORE RECOVERY FOR BORING: 99 %
19. SIGNATURE OF INSPECTOR: Tom Danielson

ELEVATION a	DEPTH b	LEGEND c	CLASSIFICATION OF MATERIALS (Description) d	% CORE RECOV-ERY e	BOX OR SAMPLE NO. f	RQD g	FRAC-TURES h	REMARKS (Drilling time, water loss, depth weathering, etc., if significant) i
				95%	Run 23 Box 9 84.0 89.0	61%	30 45 30 45 30 60 60 30 25	Start 0730 Stop 0800
1062	86							
1060	88			100%	Run 24 Box 9 88.0 89.0	100%		Start 0810 Stop 0815
			Aphanitic to breccia andesite, strongly chloritized.	100%	Run 25 Box 10 89.0 94.0	80%	10 0 0 0	Start 0820 Stop 0842
1058	90							
1056	92		Calcite filled in open fracture ~6.5-7cm.					
1054	94		Rubble.	98%	Run 26 Box 10 94.0 99.0	98%	5	Start 0850 Stop 0915
			Andesite with minimal breccia fragments; becoming softer.					
1052	96							
1050	98							

DRILLING LOG

DIVISION: Seattle District

INSTALLATION: Howard Hanson Dam

SHEET 8 OF 8 SHEETS

1. PROJECT: Site Exploration
2. LOCATION (Coordinates or Station): Howard Hanson Dam
3. DRILLING AGENCY: Gregory Drilling
4. HOLE NO. (As shown on drawing title and file number): 04-DD-247
5. NAME OF DRILLER: Chris Gregory
6. DIRECTION OF HOLE: [X] VERTICAL [ ] INCLINED _____ DEG. FROM VERT.
7. THICKNESS OF OVERBURDEN: 0
8. DEPTH DRILLED INTO ROCK: 104
9. TOTAL DEPTH OF HOLE: 104.0
10. SIZE AND TYPE OF BIT: HQ-3
11. DATUM FOR ELEVATION SHOWN (TBM or MSL): MSL
12. MANUFACTURES'S DESIGNATION OF DRILL: CME 850
13. TOTAL NO. OF OVER-BURDEN SAMPLES TAKEN: DISTURBED / UNDISTURBED
14. TOTAL NUMBER CORE BOXES: 11
15. ELEVATION GROUND WATER:
16. DATE HOLE: STARTED 20 July 04 / COMPLETED 21 July 04
17. ELEVATION TOP OF HOLE: 1148.0
18. TOTAL CORE RECOVERY FOR BORING: 99 %
19. SIGNATURE OF INSPECTOR: Tom Danielson

ELEVATION a	DEPTH b	LEGEND c	CLASSIFICATION OF MATERIALS (Description) d	% CORE RECOVERY e	BOX OR SAMPLE NO. f	RQD g	FRACTURES h	REMARKS (Drilling time, water loss, depth weathering, etc., if significant) i
				100%	Run 27 Box 11 99.0 104.0	88%		Start 0930 Stop 1000
1048	100						0	
							5	
1046	102						30	
			Rubble.				0	
							0	
1044	104							
			Bottom of Hole at 104' bgs.					

DRILLING LOG

DIVISION: Seattle District

INSTALLATION: Howard Hanson Dam

SHEET 1 OF 11 SHEETS

1. PROJECT: Site Exploration
2. LOCATION (Coordinates or Station): Howard Hanson Dam
3. DRILLING AGENCY: Gregory Drilling
4. HOLE NO. (As shown on drawing title and file number): 04-DD-248
5. NAME OF DRILLER: Chris Gregory
6. DIRECTION OF HOLE: [X] VERTICAL [ ] INCLINED _____ DEG. FROM VERT.
7. THICKNESS OF OVERBURDEN: 0.7
8. DEPTH DRILLED INTO ROCK: 142.3
9. TOTAL DEPTH OF HOLE: 143.0
10. SIZE AND TYPE OF BIT: HQ-3
11. DATUM FOR ELEVATION SHOWN (TBM or MSL): MSL
12. MANUFACTURES'S DESIGNATION OF DRILL: CME 850
13. TOTAL NO. OF OVER-BURDEN SAMPLES TAKEN: DISTURBED / UNDISTURBED
14. TOTAL NUMBER CORE BOXES: 15
15. ELEVATION GROUND WATER:
16. DATE HOLE: STARTED 17 August 04 / COMPLETED 19 August 04
17. ELEVATION TOP OF HOLE: 1151.0
18. TOTAL CORE RECOVERY FOR BORING: 100 %
19. SIGNATURE OF INSPECTOR: Tom Danielson

ELEVATION a	DEPTH b	LEGEND c	CLASSIFICATION OF MATERIALS (Description) d	% CORE RECOV-ERY e	BOX OR SAMPLE NO. f	RQD g	FRAC-TURES h	REMARKS (Drilling time, water loss, depth weathering, etc., if significant) i
1150			Top of rock. Core Loss.	88%	Run 1 Box 1 0.7 5.5	67%		Start 1545 Stop 1610
			Light gray, moderately hard, andesite breccia.					
	2							
							20	
1148								
	4							
1146								
	6			100%	Run 2 Box 1 5.5 10.5	70%		Start 1610 Stop 1632
1144								
							60	
	8							
1142							30	
	10							
			Aphanitic Andesite flow with breccia fragments.	100%	Run 3 Box 2 10.5 15.5		90	Start 1650 Stop 1707
1140								
	12							
1138							45	
							55	
	14							

DRILLING LOG

DIVISION: Seattle District

INSTALLATION: Howard Hanson Dam

SHEET 2 OF 11 SHEETS

1. PROJECT: Site Exploration
2. LOCATION (Coordinates or Station): Howard Hanson Dam
3. DRILLING AGENCY: Gregory Drilling
4. HOLE NO. (As shown on drawing title and file number): 04-DD-248
5. NAME OF DRILLER: Chris Gregory
6. DIRECTION OF HOLE: [X] VERTICAL [ ] INCLINED _____ DEG. FROM VERT.
7. THICKNESS OF OVERBURDEN: 0.7
8. DEPTH DRILLED INTO ROCK: 142.3
9. TOTAL DEPTH OF HOLE: 143.0
10. SIZE AND TYPE OF BIT: HQ-3
11. DATUM FOR ELEVATION SHOWN (TBM or MSL): MSL
12. MANUFACTURES'S DESIGNATION OF DRILL: CME 850
13. TOTAL NO. OF OVER-BURDEN SAMPLES TAKEN: DISTURBED: UNDISTURBED:
14. TOTAL NUMBER CORE BOXES: 15
15. ELEVATION GROUND WATER:
16. DATE HOLE: STARTED 17 August 04 COMPLETED 19 August 04
17. ELEVATION TOP OF HOLE: 1151.0
18. TOTAL CORE RECOVERY FOR BORING: 100 %
19. SIGNATURE OF INSPECTOR: Tom Danielson

ELEVATION a	DEPTH b	LEGEND c	CLASSIFICATION OF MATERIALS (Description) d	% CORE RECOV-ERY e	BOX OR SAMPLE NO. f	RQD g	FRAC-TURES h	REMARKS (Drilling time, water loss, depth weathering, etc., if significant) i
							30 60	
1136								
	16		15.5-17.5': Abundant pale gray breccia fragments.	100%	Run 4 Box 2 15.5 20.5	100%		18 August 04 Start 0700 Stop 0720
1134								
	18							
1132			Andesite flow/ breccia with abundant calcited/ pyrite stringeres/ annealed fractures (to 1cm).				35	
	20							
1130			Calcite is typically white but can bary to dark gray.	100%	Run 5 Box 3 20.5 23.0	100%		Start 0725 Stop 0737
	22							
1128			Abundant annealed fractures (with calcite and pyrite to >1cm).	100%	Run 6 Box 3 23.0 25.5	100%		Start 0743 Stop 0753
	24							
1126								
	26		Andesite flow/breccia with abundant calcite and pyrite alterations (Py has granular masses along fractures or as nodules).	100%	Run 7 Box 3 25.5 30.5	97%		Start 0758 Stop 0820
1124								
	28						40	

DRILLING LOG

DIVISION: Seattle District

INSTALLATION: Howard Hanson Dam

SHEET 3 OF 11 SHEETS

1. PROJECT: Site Exploration
2. LOCATION (Coordinates or Station): Howard Hanson Dam
3. DRILLING AGENCY: Gregory Drilling
4. HOLE NO. (As shown on drawing title and file number): 04-DD-248
5. NAME OF DRILLER: Chris Gregory
6. DIRECTION OF HOLE: [X] VERTICAL [ ] INCLINED _____ DEG. FROM VERT.
7. THICKNESS OF OVERBURDEN: 0.7
8. DEPTH DRILLED INTO ROCK: 142.3
9. TOTAL DEPTH OF HOLE: 143.0
10. SIZE AND TYPE OF BIT: HQ-3
11. DATUM FOR ELEVATION SHOWN (TBM or MSL): MSL
12. MANUFACTURES'S DESIGNATION OF DRILL: CME 850
13. TOTAL NO. OF OVER-BURDEN SAMPLES TAKEN: DISTURBED / UNDISTURBED
14. TOTAL NUMBER CORE BOXES: 15
15. ELEVATION GROUND WATER
16. DATE HOLE: STARTED 17 August 04 / COMPLETED 19 August 04
17. ELEVATION TOP OF HOLE: 1151.0
18. TOTAL CORE RECOVERY FOR BORING: 100 %
19. SIGNATURE OF INSPECTOR: Tom Danielson

ELEVATION a	DEPTH b	LEGEND c	CLASSIFICATION OF MATERIALS (Description) d	% CORE RECOV-ERY e	BOX OR SAMPLE NO. f	RQD g	FRAC-TURES h	REMARKS (Drilling time, water loss, depth weathering, etc., if significant) i
1122	30						30	
1120	32		Andesite, aphanitic with fewer breccia gragments, pyrite nodules as abundant.	100%	Run 8 Box 4 30.5 35.5	100%	60 60	Start 0830 Stop 0851
1118	34						45	
1116	36		Andesite, breccia fragments increase, pyrite nodules decrease.	100%	Run 9 Box 4 35.5 40.5	100%	60 10	Start 0857 Stop 0919
1114	38							
1112	40						20	
1110	42		Pyrite forms halo arounde some breccia clasts.	100%	Run 10 Box 5 40.5 45.5	70%	60	Start 0925 Stop 0947

DRILLING LOG

DIVISION: Seattle District

INSTALLATION: Howard Hanson Dam

SHEET 4 OF 11 SHEETS

1. PROJECT: Site Exploration
2. LOCATION (Coordinates or Station): Howard Hanson Dam
3. DRILLING AGENCY: Gregory Drilling
4. HOLE NO. (As shown on drawing title and file number): 04-DD-248
5. NAME OF DRILLER: Chris Gregory
6. DIRECTION OF HOLE: [X] VERTICAL [ ] INCLINED _____ DEG. FROM VERT.
7. THICKNESS OF OVERBURDEN: 0.7
8. DEPTH DRILLED INTO ROCK: 142.3
9. TOTAL DEPTH OF HOLE: 143.0
10. SIZE AND TYPE OF BIT: HQ-3
11. DATUM FOR ELEVATION SHOWN (TBM or MSL): MSL
12. MANUFACTURES'S DESIGNATION OF DRILL: CME 850
13. TOTAL NO. OF OVER-BURDEN SAMPLES TAKEN: DISTURBED / UNDISTURBED
14. TOTAL NUMBER CORE BOXES: 15
15. ELEVATION GROUND WATER:
16. DATE HOLE: STARTED 17 August 04 / COMPLETED 19 August 04
17. ELEVATION TOP OF HOLE: 1151.0
18. TOTAL CORE RECOVERY FOR BORING: 100 %
19. SIGNATURE OF INSPECTOR: Tom Danielson

ELEVATION a	DEPTH b	LEGEND c	CLASSIFICATION OF MATERIALS (Description) d	% CORE RECOV-ERY e	BOX OR SAMPLE NO. f	RQD g	FRAC-TURES h	REMARKS (Drilling time, water loss, depth weathering, etc., if significant) i
							5	
1108							60	
							15	
							5	
							60	
	44						40	
1106								
			Pyroclastic, light gray, with seams of clay.	100%	Run 11 Box 5 45.5 50.5	74%		Start 1003 Stop 1020
	46							
								Gray/green clay seams.
1104								
							40	
	48							
							30	
1102								
	50						10	
			Pyroclastic.	100%	Run 12 Box 6 50.5 55.5	100%		Start 1027 Stop 1116
1100								Flushed mud box.
	52		Pyrite nodules to 4.5cm (abundant).					
1098							50	
	54							
1096								
				100%	Run 13 Box 6	98%		Start Stop 1145
	56							

DRILLING LOG

DIVISION: Seattle District

INSTALLATION: Howard Hanson Dam

SHEET 5 OF 11 SHEETS

1. PROJECT: Site Exploration
2. LOCATION (Coordinates or Station): Howard Hanson Dam
3. DRILLING AGENCY: Gregory Drilling
4. HOLE NO. (As shown on drawing title and file number): 04-DD-248
5. NAME OF DRILLER: Chris Gregory
6. DIRECTION OF HOLE: [X] VERTICAL [ ] INCLINED _____ DEG. FROM VERT.
7. THICKNESS OF OVERBURDEN: 0.7
8. DEPTH DRILLED INTO ROCK: 142.3
9. TOTAL DEPTH OF HOLE: 143.0
10. SIZE AND TYPE OF BIT: HQ-3
11. DATUM FOR ELEVATION SHOWN (TBM or MSL): MSL
12. MANUFACTURES'S DESIGNATION OF DRILL: CME 850
13. TOTAL NO. OF OVER-BURDEN SAMPLES TAKEN: DISTURBED / UNDISTURBED
14. TOTAL NUMBER CORE BOXES: 15
15. ELEVATION GROUND WATER:
16. DATE HOLE: STARTED 17 August 04 / COMPLETED 19 August 04
17. ELEVATION TOP OF HOLE: 1151.0
18. TOTAL CORE RECOVERY FOR BORING: 100 %
19. SIGNATURE OF INSPECTOR: Tom Danielson

ELEVATION a	DEPTH b	LEGEND c	CLASSIFICATION OF MATERIALS (Description) d	% CORE RECOV-ERY e	BOX OR SAMPLE NO. f	RQD g	FRAC-TURES h	REMARKS (Drilling time, water loss, depth weathering, etc., if significant) i
					55.5 60.5			
1094			Transition to Andesite flow/breccia (?); continues to contain abundant pyrite.					
	58							
1092								
	60						15	
1090			Andesite Porphyry.	96%	Run 14 Box 7 60.5 65.5	89%	15 60 5	Start 1150 Stop 1212
	62							
1088								
	64							
1086			Red tint last 0.5'.					
	66		Autoclastic Andesite Porphyry, nearly clast supported, red tint.	100%	Run 15 Box 7 65.5 68.0	100%	60	Start 1218 Stop 1228
1084								
	68			100%	Run 16 Box 7 68.0 70.5	100%	25	Start 1234 Stop 1245
1082								
	70		Loses much of red tint.					

DRILLING LOG

DIVISION: Seattle District

INSTALLATION: Howard Hanson Dam

SHEET 6 OF 11 SHEETS

1. PROJECT: Site Exploration
2. LOCATION (Coordinates or Station): Howard Hanson Dam
3. DRILLING AGENCY: Gregory Drilling
4. HOLE NO. (As shown on drawing title and file number): 04-DD-248
5. NAME OF DRILLER: Chris Gregory
6. DIRECTION OF HOLE: [X] VERTICAL [ ] INCLINED _____ DEG. FROM VERT.
7. THICKNESS OF OVERBURDEN: 0.7
8. DEPTH DRILLED INTO ROCK: 142.3
9. TOTAL DEPTH OF HOLE: 143.0
10. SIZE AND TYPE OF BIT: HQ-3
11. DATUM FOR ELEVATION SHOWN (TBM or MSL): MSL
12. MANUFACTURES'S DESIGNATION OF DRILL: CME 850
13. TOTAL NO. OF OVER-BURDEN SAMPLES TAKEN: DISTURBED / UNDISTURBED
14. TOTAL NUMBER CORE BOXES: 15
15. ELEVATION GROUND WATER
16. DATE HOLE: STARTED 17 August 04 / COMPLETED 19 August 04
17. ELEVATION TOP OF HOLE: 1151.0
18. TOTAL CORE RECOVERY FOR BORING: 100 %
19. SIGNATURE OF INSPECTOR: Tom Danielson

ELEVATION a	DEPTH b	LEGEND c	CLASSIFICATION OF MATERIALS (Description) d	% CORE RECOV-ERY e	BOX OR SAMPLE NO. f	RQD g	FRAC-TURES h	REMARKS (Drilling time, water loss, depth weathering, etc., if significant) i
1080								
			Andesite Porphyry, green with breccia fragments.	100%	Run 17 Box 7 70.5 75.5	97%		Start 1252 Stop 1316
	72						30 20	
1078								
	74							
1076								
	76		Andesite with a mottled appearance, hardness is typical of pyroclastic but texture is indeterminent.	100%	Run 18 Box 8 75.5 80.5	100%		Start 1327 Stop
1074								
	78							
1072							15	
	80							
				100%	Run 19 Box 9 80.5 85.5	100%	60	Start 1352 Stop 1421
1070								
	82							
1068								
	84							

DRILLING LOG

DIVISION: Seattle District

INSTALLATION: Howard Hanson Dam

SHEET 7 OF 11 SHEETS

1. PROJECT: Site Exploration
2. LOCATION (Coordinates or Station): Howard Hanson Dam
3. DRILLING AGENCY: Gregory Drilling
4. HOLE NO. (As shown on drawing title and file number): 04-DD-248
5. NAME OF DRILLER: Chris Gregory
6. DIRECTION OF HOLE: [X] VERTICAL [ ] INCLINED _____ DEG. FROM VERT.
7. THICKNESS OF OVERBURDEN: 0.7
8. DEPTH DRILLED INTO ROCK: 142.3
9. TOTAL DEPTH OF HOLE: 143.0
10. SIZE AND TYPE OF BIT: HQ-3
11. DATUM FOR ELEVATION SHOWN (TBM or MSL): MSL
12. MANUFACTURES'S DESIGNATION OF DRILL: CME 850
13. TOTAL NO. OF OVER-BURDEN SAMPLES TAKEN: DISTURBED _____ UNDISTURBED _____
14. TOTAL NUMBER CORE BOXES: 15
15. ELEVATION GROUND WATER: _____
16. DATE HOLE: STARTED 17 August 04 COMPLETED 19 August 04
17. ELEVATION TOP OF HOLE: 1151.0
18. TOTAL CORE RECOVERY FOR BORING: 100 %
19. SIGNATURE OF INSPECTOR: Tom Danielson

ELEVATION a	DEPTH b	LEGEND c	CLASSIFICATION OF MATERIALS (Description) d	% CORE RECOV-ERY e	BOX OR SAMPLE NO. f	RQD g	FRAC-TURES h	REMARKS (Drilling time, water loss, depth weathering, etc., if significant) i
1066							30	
	86		Andesite Breccia, green with local red tint.	100%	Run 20 Box 9 85.5 90.5	100%		Start Stop 1450
1064							50	
	88							
1062								
	90							
1060				100%	Run 21 Box 10 90.5 95.5	100%		Start 1456 Stop 1516
	92							
1058								
	94						25	
1056								
	96			100%	Run 22 Box 10 95.5 100.5	100%		Start 1525 Stop 1545
1054							30 30	
	98							

DRILLING LOG

DIVISION: Seattle District

INSTALLATION: Howard Hanson Dam

SHEET 8 OF 11 SHEETS

1. PROJECT: Site Exploration
2. LOCATION (Coordinates or Station): Howard Hanson Dam
3. DRILLING AGENCY: Gregory Drilling
4. HOLE NO. (As shown on drawing title and file number): 04-DD-248
5. NAME OF DRILLER: Chris Gregory
6. DIRECTION OF HOLE: [X] VERTICAL [ ] INCLINED _____ DEG. FROM VERT.
7. THICKNESS OF OVERBURDEN: 0.7
8. DEPTH DRILLED INTO ROCK: 142.3
9. TOTAL DEPTH OF HOLE: 143.0
10. SIZE AND TYPE OF BIT: HQ-3
11. DATUM FOR ELEVATION SHOWN (TBM or MSL): MSL
12. MANUFACTURES'S DESIGNATION OF DRILL: CME 850
13. TOTAL NO. OF OVER-BURDEN SAMPLES TAKEN: DISTURBED: UNDISTURBED:
14. TOTAL NUMBER CORE BOXES: 15
15. ELEVATION GROUND WATER:
16. DATE HOLE: STARTED 17 August 04 COMPLETED 19 August 04
17. ELEVATION TOP OF HOLE: 1151.0
18. TOTAL CORE RECOVERY FOR BORING: 100 %
19. SIGNATURE OF INSPECTOR: Tom Danielson

ELEVATION a	DEPTH b	LEGEND c	CLASSIFICATION OF MATERIALS (Description) d	% CORE RECOV-ERY e	BOX OR SAMPLE NO. f	RQD g	FRAC-TURES h	REMARKS (Drilling time, water loss, depth weathering, etc., if significant) i
1052								
	100		Extensive calcite veining final 0.5', veins to ~1cm.					
1050			Andesite Breccia, some clasts have a hardness of R2.	100%	Run 23 Box 11 100.5 105.5	100%		Start 1606 Stop 1624
	102							
1048								
	104							
1046								
	106			100%	Run 24 Box 11 105.5 110.5		5	Start 1630 Stop 1653
1044								
	108						60	
1042							20	
	110							
1040			Andesite Porphyry breccia, green with local red tint.	100%	Run 25 Box12 110.5 115.5	100%	20	Start 1700 Stop 1720
	112							

DRILLING LOG

DIVISION: Seattle District

INSTALLATION: Howard Hanson Dam

SHEET 9 OF 11 SHEETS

1. PROJECT: Site Exploration
2. LOCATION (Coordinates or Station): Howard Hanson Dam
3. DRILLING AGENCY: Gregory Drilling
4. HOLE NO. (As shown on drawing title and file number): 04-DD-248
5. NAME OF DRILLER: Chris Gregory
6. DIRECTION OF HOLE: [X] VERTICAL [ ] INCLINED _____ DEG. FROM VERT.
7. THICKNESS OF OVERBURDEN: 0.7
8. DEPTH DRILLED INTO ROCK: 142.3
9. TOTAL DEPTH OF HOLE: 143.0
10. SIZE AND TYPE OF BIT: HQ-3
11. DATUM FOR ELEVATION SHOWN (TBM or MSL): MSL
12. MANUFACTURES'S DESIGNATION OF DRILL: CME 850
13. TOTAL NO. OF OVER-BURDEN SAMPLES TAKEN: DISTURBED / UNDISTURBED
14. TOTAL NUMBER CORE BOXES: 15
15. ELEVATION GROUND WATER:
16. DATE HOLE: STARTED 17 August 04 / COMPLETED 19 August 04
17. ELEVATION TOP OF HOLE: 1151.0
18. TOTAL CORE RECOVERY FOR BORING: 100 %
19. SIGNATURE OF INSPECTOR: Tom Danielson

ELEVATION a	DEPTH b	LEGEND c	CLASSIFICATION OF MATERIALS (Description) d	% CORE RECOV-ERY e	BOX OR SAMPLE NO. f	RQD g	FRAC-TURES h	REMARKS (Drilling time, water loss, depth weathering, etc., if significant) i
1038								
	114						70	
1036								
	116			100%	Run 26 Box 12 115.5 120.5	100%		19 August 04 Start 0740 Stop 0805
1034								
	118							
1032								
	120							
1030			Andesite Porphyry breccia without the local red tint and clasts are smaller.	100%	Run 27 Box 13 120.5 125.5	100%	45	Start Stop 0837
	122						30	
1028							20	
							40	
	124						20	
1026								
							45	
	126			100%	Run 28 Box 13	95%		Start 0850 Stop 0911

DRILLING LOG

DIVISION: Seattle District

INSTALLATION: Howard Hanson Dam

SHEET 10 OF 11 SHEETS

1. PROJECT: Site Exploration
2. LOCATION (Coordinates or Station): Howard Hanson Dam
3. DRILLING AGENCY: Gregory Drilling
4. HOLE NO. (As shown on drawing title and file number): 04-DD-248
5. NAME OF DRILLER: Chris Gregory
6. DIRECTION OF HOLE: [X] VERTICAL [ ] INCLINED _____ DEG. FROM VERT.
7. THICKNESS OF OVERBURDEN: 0.7
8. DEPTH DRILLED INTO ROCK: 142.3
9. TOTAL DEPTH OF HOLE: 143.0
10. SIZE AND TYPE OF BIT: HQ-3
11. DATUM FOR ELEVATION SHOWN (TBM or MSL): MSL
12. MANUFACTURES'S DESIGNATION OF DRILL: CME 850
13. TOTAL NO. OF OVER-BURDEN SAMPLES TAKEN: DISTURBED: UNDISTURBED:
14. TOTAL NUMBER CORE BOXES: 15
15. ELEVATION GROUND WATER:
16. DATE HOLE: STARTED 17 August 04 COMPLETED 19 August 04
17. ELEVATION TOP OF HOLE: 1151.0
18. TOTAL CORE RECOVERY FOR BORING: 100 %
19. SIGNATURE OF INSPECTOR: Tom Danielson

ELEVATION a	DEPTH b	LEGEND c	CLASSIFICATION OF MATERIALS (Description) d	% CORE RECOV-ERY e	BOX OR SAMPLE NO. f	RQD g	FRAC-TURES h	REMARKS (Drilling time, water loss, depth weathering, etc., if significant) i
1024	128				125.5 130.5		40 30 20	
1022	130							
1020	132			100%	Run 29 Box 14 130.5 135.5	100%	35	Start 0918 Stop 0940
1018	134							
1016	136			100%	Run 30 Box 14 135.5 140.5	94%	40 30	Start 0947 Stop 1010
1014	138							
1012	140							

DRILLING LOG

DIVISION: Seattle District

INSTALLATION: Howard Hanson Dam

SHEET 11 OF 11 SHEETS

1. PROJECT: Site Exploration
2. LOCATION (Coordinates or Station): Howard Hanson Dam
3. DRILLING AGENCY: Gregory Drilling
4. HOLE NO. (As shown on drawing title and file number): 04-DD-248
5. NAME OF DRILLER: Chris Gregory
6. DIRECTION OF HOLE: [X] VERTICAL [ ] INCLINED _____ DEG. FROM VERT.
7. THICKNESS OF OVERBURDEN: 0.7
8. DEPTH DRILLED INTO ROCK: 142.3
9. TOTAL DEPTH OF HOLE: 143.0
10. SIZE AND TYPE OF BIT: HQ-3
11. DATUM FOR ELEVATION SHOWN (TBM or MSL): MSL
12. MANUFACTURES'S DESIGNATION OF DRILL: CME 850
13. TOTAL NO. OF OVER-BURDEN SAMPLES TAKEN: DISTURBED / UNDISTURBED
14. TOTAL NUMBER CORE BOXES: 15
15. ELEVATION GROUND WATER
16. DATE HOLE: STARTED 17 August 04 / COMPLETED 19 August 04
17. ELEVATION TOP OF HOLE: 1151.0
18. TOTAL CORE RECOVERY FOR BORING: 100 %
19. SIGNATURE OF INSPECTOR: Tom Danielson

ELEVATION a	DEPTH b	LEGEND c	CLASSIFICATION OF MATERIALS (Description) d	% CORE RECOV-ERY e	BOX OR SAMPLE NO. f	RQD g	FRAC-TURES h	REMARKS (Drilling time, water loss, depth weathering, etc., if significant) i
1010	142		Andesite Porphyry breccia, green to dark green with small breccia fragments.	100%	Run 31 Box 15 140.5 143.0	100%	40	Stop 1030
1008								
			Bottom of Hole at 143' bgs.					

DRILLING LOG

DIVISION: Seattle District

INSTALLATION: Howard Hanson Dam

SHEET 1 OF 11 SHEETS

1. PROJECT: Site Exploration
2. LOCATION (Coordinates or Station): Howard Hanson Dam
3. DRILLING AGENCY: Gregory Drilling
4. HOLE NO. (As shown on drawing title and file number): 04-DD-249
5. NAME OF DRILLER: Chris Gregory
6. DIRECTION OF HOLE: [X] VERTICAL [ ] INCLINED _____ DEG. FROM VERT.
7. THICKNESS OF OVERBURDEN: 0.6
8. DEPTH DRILLED INTO ROCK: 141.9
9. TOTAL DEPTH OF HOLE: 142.5
10. SIZE AND TYPE OF BIT: HQ-3
11. DATUM FOR ELEVATION SHOWN (TBM or MSL): MSL
12. MANUFACTURES'S DESIGNATION OF DRILL: CME 850
13. TOTAL NO. OF OVER-BURDEN SAMPLES TAKEN: DISTURBED: UNDISTURBED:
14. TOTAL NUMBER CORE BOXES: 15
15. ELEVATION GROUND WATER:
16. DATE HOLE: STARTED 9 August 04 COMPLETED 12 August 04
17. ELEVATION TOP OF HOLE: 1150.0
18. TOTAL CORE RECOVERY FOR BORING: 100 %
19. SIGNATURE OF INSPECTOR: Tom Danielson

ELEVATION a	DEPTH b	LEGEND c	CLASSIFICATION OF MATERIALS (Description) d	% CORE RECOV-ERY e	BOX OR SAMPLE NO. f	RQD g	FRAC-TURES h	REMARKS (Drilling time, water loss, depth weathering, etc., if significant) i
			Top of Rock. Core Loss.	93%	Run 1 Box 1 0.7 5.5	67%	0 10 35 5 10 0 60 10 15 0 30 30	Start 1050 Stop 1110
1148	2		Pyroclastic, gray/green, soft matrix, red to green xenolithls.					
1146	4							
1144	6		Pyroclastic	100%	Run 2 Box 1 5.5 10.5	94%	10 80 15 5	Start 1115 Stop 1135
1142	8							
1140	10							
1138	12			100%	Run 3 Box 2 10.5 15.5	84%	30 60	Start 1140 Stop 1202
1136	14		Annealed breccia zone.					

DRILLING LOG

DIVISION: Seattle District

INSTALLATION: Howard Hanson Dam

SHEET 2 OF 11 SHEETS

1. PROJECT: Site Exploration
2. LOCATION (Coordinates or Station): Howard Hanson Dam
3. DRILLING AGENCY: Gregory Drilling
4. HOLE NO. (As shown on drawing title and file number): 04-DD-249
5. NAME OF DRILLER: Chris Gregory
6. DIRECTION OF HOLE: [X] VERTICAL [ ] INCLINED _____ DEG. FROM VERT.
7. THICKNESS OF OVERBURDEN: 0.6
8. DEPTH DRILLED INTO ROCK: 141.9
9. TOTAL DEPTH OF HOLE: 142.5
10. SIZE AND TYPE OF BIT: HQ-3
11. DATUM FOR ELEVATION SHOWN (TBM or MSL): MSL
12. MANUFACTURES'S DESIGNATION OF DRILL: CME 850
13. TOTAL NO. OF OVER-BURDEN SAMPLES TAKEN: DISTURBED: UNDISTURBED:
14. TOTAL NUMBER CORE BOXES: 15
15. ELEVATION GROUND WATER:
16. DATE HOLE: STARTED 9 August 04 COMPLETED 12 August 04
17. ELEVATION TOP OF HOLE: 1150.0
18. TOTAL CORE RECOVERY FOR BORING: 100 %
19. SIGNATURE OF INSPECTOR: Tom Danielson

ELEVATION a	DEPTH b	LEGEND c	CLASSIFICATION OF MATERIALS (Description) d	% CORE RECOVERY e	BOX OR SAMPLE NO. f	RQD g	FRACTURES h	REMARKS (Drilling time, water loss, depth weathering, etc., if significant) i
			Xenoliths are strongly chlorite and calcite altered; particularly minerals.				30 60	
1134	16		Andesite Breccia; olive green with red tine from clasts, more competant than pyroclastic, alteration is pervasive but strongly concentrated along fractures. Calcite stringer.	96%	Run 4 Box 2 15.5 20.5	96%	75 35 25 70	Start 1210 Stop 1230
1132	18		Calcite stringer.				60 20	
1130	20		Calcite stringer ~1cm.				20	
			Core Loss.					
1128	22		Pyroclastic with few xenoliths (or soft breccia).	100%	Run 5 Box 3 20.5 25.5	94%	35 35	Start Stop 1300
1126	24		Picking up xenoliths.					
1124	26		Pyroclastic with abundant xenoliths (or soft breccia).	100%	Run 6 Box 3 25.5 30.5	100%	60	Start 1305 Stop 1320
1122	28							

DRILLING LOG

DIVISION: Seattle District

INSTALLATION: Howard Hanson Dam

SHEET 3 OF 11 SHEETS

1. PROJECT: Site Exploration
2. LOCATION (Coordinates or Station): Howard Hanson Dam
3. DRILLING AGENCY: Gregory Drilling
4. HOLE NO. (As shown on drawing title and file number): 04-DD-249
5. NAME OF DRILLER: Chris Gregory
6. DIRECTION OF HOLE: [X] VERTICAL [ ] INCLINED _____ DEG. FROM VERT.
7. THICKNESS OF OVERBURDEN: 0.6
8. DEPTH DRILLED INTO ROCK: 141.9
9. TOTAL DEPTH OF HOLE: 142.5
10. SIZE AND TYPE OF BIT: HQ-3
11. DATUM FOR ELEVATION SHOWN (TBM or MSL): MSL
12. MANUFACTURES'S DESIGNATION OF DRILL: CME 850
13. TOTAL NO. OF OVER-BURDEN SAMPLES TAKEN: DISTURBED: UNDISTURBED:
14. TOTAL NUMBER CORE BOXES: 15
15. ELEVATION GROUND WATER:
16. DATE HOLE: STARTED 9 August 04 COMPLETED 12 August 04
17. ELEVATION TOP OF HOLE: 1150.0
18. TOTAL CORE RECOVERY FOR BORING: 100 %
19. SIGNATURE OF INSPECTOR: Tom Danielson

ELEVATION a	DEPTH b	LEGEND c	CLASSIFICATION OF MATERIALS (Description) d	% CORE RECOV-ERY e	BOX OR SAMPLE NO. f	RQD g	FRAC-TURES h	REMARKS (Drilling time, water loss, depth weathering, etc., if significant) i
1120	30							
			Pyroclastic.	100%	Run 7 Box 4 30.5 35.5	100%		Start 1325 Stop 1340
1118	32		Transitional Zone (?)					
			Andesite Breccia.				30	
1116	34							
							30	
1114	36		Andesite Porphyry.	100%	Run 8 Box 4 35.5 40.5	100%	60 50	Start 1345 Stop 1400
							30	
							10	
1112	38						10	
1110	40						30	
			Andesite Porphyry with occasional breccia fragments.	100%	Run 9 Box 5 40.5 45.5	86%	63	Start 1415 Stop 1435
1108	42						35	

DRILLING LOG

DIVISION: Seattle District

INSTALLATION: Howard Hanson Dam

SHEET 4 OF 11 SHEETS

1. PROJECT: Site Exploration
2. LOCATION (Coordinates or Station): Howard Hanson Dam
3. DRILLING AGENCY: Gregory Drilling
4. HOLE NO. (As shown on drawing title and file number): 04-DD-249
5. NAME OF DRILLER: Chris Gregory
6. DIRECTION OF HOLE: [X] VERTICAL [ ] INCLINED _____ DEG. FROM VERT.
7. THICKNESS OF OVERBURDEN: 0.6
8. DEPTH DRILLED INTO ROCK: 141.9
9. TOTAL DEPTH OF HOLE: 142.5
10. SIZE AND TYPE OF BIT: HQ-3
11. DATUM FOR ELEVATION SHOWN (TBM or MSL): MSL
12. MANUFACTURES'S DESIGNATION OF DRILL: CME 850
13. TOTAL NO. OF OVER-BURDEN SAMPLES TAKEN: DISTURBED / UNDISTURBED
14. TOTAL NUMBER CORE BOXES: 15
15. ELEVATION GROUND WATER:
16. DATE HOLE: STARTED 9 August 04 / COMPLETED 12 August 04
17. ELEVATION TOP OF HOLE: 1150.0
18. TOTAL CORE RECOVERY FOR BORING: 100 %
19. SIGNATURE OF INSPECTOR: Tom Danielson

ELEVATION a	DEPTH b	LEGEND c	CLASSIFICATION OF MATERIALS (Description) d	% CORE RECOV-ERY e	BOX OR SAMPLE NO. f	RQD g	FRAC-TURES h	REMARKS (Drilling time, water loss, depth weathering, etc., if significant) i
							35	
			Coarser down section.				40	
1106	44						45	
							60	
				100%	Run 10 Box 5 45.5 50.5	72%	30	Start 1442 Stop 1458
1104	46						30	
							45	
							30	
							35	
1102	48						45	
							30	
							45	
							10	
							15	
1100	50						45	
			Pyroclastic (or soft breccia).	100%	Run 11 Box 6 50.5 55.5	100%	40	Start 1520 Stop 1540
1098	52							
1096	54							
				100%	Run 12 Box 6	100%		Start 1545 Stop 1605
1094	56							

DRILLING LOG

DIVISION: Seattle District

INSTALLATION: Howard Hanson Dam

SHEET 5 OF 11 SHEETS

1. PROJECT: Site Exploration
2. LOCATION (Coordinates or Station): Howard Hanson Dam
3. DRILLING AGENCY: Gregory Drilling
4. HOLE NO. (As shown on drawing title and file number): 04-DD-249
5. NAME OF DRILLER: Chris Gregory
6. DIRECTION OF HOLE: [X] VERTICAL [ ] INCLINED _____ DEG. FROM VERT.
7. THICKNESS OF OVERBURDEN: 0.6
8. DEPTH DRILLED INTO ROCK: 141.9
9. TOTAL DEPTH OF HOLE: 142.5
10. SIZE AND TYPE OF BIT: HQ-3
11. DATUM FOR ELEVATION SHOWN (TBM or MSL): MSL
12. MANUFACTURES'S DESIGNATION OF DRILL: CME 850
13. TOTAL NO. OF OVER-BURDEN SAMPLES TAKEN: DISTURBED: UNDISTURBED:
14. TOTAL NUMBER CORE BOXES: 15
15. ELEVATION GROUND WATER:
16. DATE HOLE: STARTED 9 August 04 COMPLETED 12 August 04
17. ELEVATION TOP OF HOLE: 1150.0
18. TOTAL CORE RECOVERY FOR BORING: 100 %
19. SIGNATURE OF INSPECTOR: Tom Danielson

ELEVATION a	DEPTH b	LEGEND c	CLASSIFICATION OF MATERIALS (Description) d	% CORE RECOV-ERY e	BOX OR SAMPLE NO. f	RQD g	FRAC-TURES h	REMARKS (Drilling time, water loss, depth weathering, etc., if significant) i
			Pyroclastic (or breccia) Xenoliths/clasts/fragments to 3.5".		55.5 60.5			
1092	58						5	
			Sub-vertical calcite stringers throughout to 1cm.					
1090	60							
				100%	Run 13 Box7 60.5 62.7	100%		Start 1610 Stop 1620
1088	62							
				100%	Run 14 Box 7 62.7 65.5	100%		10 August 04 Start 0745 Stop 0800
1086	64							
1084	66		Andesite Porphyry, very similar in appearance to pyroclastic above but slightly harder and evidence of melt around xenoliths.	100%	Run 15 Box 7 65.5 70.5	100%	10	11 August 04 Start 1020 Stop 1050
1082	68		Becomes less brecciated appearing down section.					
1080	70							

DRILLING LOG

DIVISION: Seattle District

INSTALLATION: Howard Hanson Dam

SHEET 6 OF 11 SHEETS

1. PROJECT: Site Exploration
2. LOCATION (Coordinates or Station): Howard Hanson Dam
3. DRILLING AGENCY: Gregory Drilling
4. HOLE NO. (As shown on drawing title and file number): 04-DD-249
5. NAME OF DRILLER: Chris Gregory
6. DIRECTION OF HOLE: [X] VERTICAL [ ] INCLINED _____ DEG. FROM VERT.
7. THICKNESS OF OVERBURDEN: 0.6
8. DEPTH DRILLED INTO ROCK: 141.9
9. TOTAL DEPTH OF HOLE: 142.5
10. SIZE AND TYPE OF BIT: HQ-3
11. DATUM FOR ELEVATION SHOWN (TBM or MSL): MSL
12. MANUFACTURES'S DESIGNATION OF DRILL: CME 850
13. TOTAL NO. OF OVER-BURDEN SAMPLES TAKEN: DISTURBED: UNDISTURBED:
14. TOTAL NUMBER CORE BOXES: 15
15. ELEVATION GROUND WATER:
16. DATE HOLE: STARTED 9 August 04 COMPLETED 12 August 04
17. ELEVATION TOP OF HOLE: 1150.0
18. TOTAL CORE RECOVERY FOR BORING: 100 %
19. SIGNATURE OF INSPECTOR: Tom Danielson

ELEVATION a	DEPTH b	LEGEND c	CLASSIFICATION OF MATERIALS (Description) d	% CORE RECOV-ERY e	BOX OR SAMPLE NO. f	RQD g	FRAC-TURES h	REMARKS (Drilling time, water loss, depth weathering, etc., if significant) i
			Andesite Porphyry/Andesite Breccia. Abundant pyrite in mechanical breaks (disseminated).	100%	Run 16 Box 8 70.5 75.5	94%	25	Start 1110 Stop 1127
1078	72							
1076	74							
			Picks up a mottled appearance (almost hyloclastic). Perhaps autoclastic?	100%	Run 17 Box 8 75.5 80.5	100%		Start 1135 Stop 1155
1074	76							
1072	78		Matrix between fragments is very strongly altered (Ch,Ca,Py). Some interlocking fragments.					
1070	80							
				100%	Run 18 Box 9 80.5 85.5	100%		Start 1205 Stop 1226
1068	82							
1066	84							

DRILLING LOG

DIVISION: Seattle District

INSTALLATION: Howard Hanson Dam

SHEET 7 OF 11 SHEETS

1. PROJECT: Site Exploration
2. LOCATION (Coordinates or Station): Howard Hanson Dam
3. DRILLING AGENCY: Gregory Drilling
4. HOLE NO. (As shown on drawing title and file number): 04-DD-249
5. NAME OF DRILLER: Chris Gregory
6. DIRECTION OF HOLE: [X] VERTICAL [ ] INCLINED _____ DEG. FROM VERT.
7. THICKNESS OF OVERBURDEN: 0.6
8. DEPTH DRILLED INTO ROCK: 141.9
9. TOTAL DEPTH OF HOLE: 142.5
10. SIZE AND TYPE OF BIT: HQ-3
11. DATUM FOR ELEVATION SHOWN (TBM or MSL): MSL
12. MANUFACTURES'S DESIGNATION OF DRILL: CME 850
13. TOTAL NO. OF OVER-BURDEN SAMPLES TAKEN: DISTURBED: UNDISTURBED:
14. TOTAL NUMBER CORE BOXES: 15
15. ELEVATION GROUND WATER:
16. DATE HOLE: STARTED 9 August 04 COMPLETED 12 August 04
17. ELEVATION TOP OF HOLE: 1150.0
18. TOTAL CORE RECOVERY FOR BORING: 100 %
19. SIGNATURE OF INSPECTOR: Tom Danielson

ELEVATION a	DEPTH b	LEGEND c	CLASSIFICATION OF MATERIALS (Description) d	% CORE RECOV-ERY e	BOX OR SAMPLE NO. f	RQD g	FRAC-TURES h	REMARKS (Drilling time, water loss, depth weathering, etc., if significant) i
1064	86			100%	Run 19 Box 9 85.5 90.5	100%		Start Stop 1300
1062	88							
			Mechanical break at 88.8', planar smooth, striated, broke when removing from core barrel.					
1060	90							
			Autoclastic Andesite Breccia.	100%	Run 20 Box 10 90.5 95.5	100%		Start 1318 Stop 1336
1058	92							
1056	94							
							40	
1054	96				Run 21 Box 10 95.5 100.5			Start 1343 Stop 1405
1052	98							

DRILLING LOG

DIVISION: Seattle District

INSTALLATION: Howard Hanson Dam

SHEET 8 OF 11 SHEETS

1. PROJECT: Site Exploration
2. LOCATION (Coordinates or Station): Howard Hanson Dam
3. DRILLING AGENCY: Gregory Drilling
4. HOLE NO. (As shown on drawing title and file number): 04-DD-249
5. NAME OF DRILLER: Chris Gregory
6. DIRECTION OF HOLE: [X] VERTICAL [ ] INCLINED _____ DEG. FROM VERT.
7. THICKNESS OF OVERBURDEN: 0.6
8. DEPTH DRILLED INTO ROCK: 141.9
9. TOTAL DEPTH OF HOLE: 142.5
10. SIZE AND TYPE OF BIT: HQ-3
11. DATUM FOR ELEVATION SHOWN (TBM or MSL): MSL
12. MANUFACTURES'S DESIGNATION OF DRILL: CME 850
13. TOTAL NO. OF OVER-BURDEN SAMPLES TAKEN: DISTURBED: UNDISTURBED:
14. TOTAL NUMBER CORE BOXES: 15
15. ELEVATION GROUND WATER:
16. DATE HOLE: STARTED 9 August 04 COMPLETED 12 August 04
17. ELEVATION TOP OF HOLE: 1150.0
18. TOTAL CORE RECOVERY FOR BORING: 100 %
19. SIGNATURE OF INSPECTOR: Tom Danielson

ELEVATION a	DEPTH b	LEGEND c	CLASSIFICATION OF MATERIALS (Description) d	% CORE RECOV-ERY e	BOX OR SAMPLE NO. f	RQD g	FRAC-TURES h	REMARKS (Drilling time, water loss, depth weathering, etc., if significant) i
1050	100		Calcite/chlorite and pyrite stringer to 3mm.				20	
				100%	Run 22 Box 11 100.5 105.5	80%		Start 1420 Stop 1440
1048	102						40	
							65	
1046	104						25	
1044	106		Autoclastic Andesite Porphyry.	100%	Run 23 Box 11 105.5 110.5	100%	5	Start 1453 Stop 1512
1042	108						60	
1040	110		Calcite stringer to 4mm.				60	
			Aphanitic to Porphyritic Andesite flow.	100%	Run 24 Box 12 110.5 115.5	86%	15	Start 1521 Stop 1543
1038	112		~1.5" gouge (crushed/broken rock and clay).				35	

DRILLING LOG

DIVISION: Seattle District

INSTALLATION: Howard Hanson Dam

SHEET 9 OF 11 SHEETS

1. PROJECT: Site Exploration
2. LOCATION (Coordinates or Station): Howard Hanson Dam
3. DRILLING AGENCY: Gregory Drilling
4. HOLE NO. (As shown on drawing title and file number): 04-DD-249
5. NAME OF DRILLER: Chris Gregory
6. DIRECTION OF HOLE: [X] VERTICAL [ ] INCLINED _____ DEG. FROM VERT.
7. THICKNESS OF OVERBURDEN: 0.6
8. DEPTH DRILLED INTO ROCK: 141.9
9. TOTAL DEPTH OF HOLE: 142.5
10. SIZE AND TYPE OF BIT: HQ-3
11. DATUM FOR ELEVATION SHOWN (TBM or MSL): MSL
12. MANUFACTURES'S DESIGNATION OF DRILL: CME 850
13. TOTAL NO. OF OVER-BURDEN SAMPLES TAKEN: DISTURBED / UNDISTURBED
14. TOTAL NUMBER CORE BOXES: 15
15. ELEVATION GROUND WATER:
16. DATE HOLE: STARTED 9 August 04 COMPLETED 12 August 04
17. ELEVATION TOP OF HOLE: 1150.0
18. TOTAL CORE RECOVERY FOR BORING: 100 %
19. SIGNATURE OF INSPECTOR: Tom Danielson

ELEVATION a	DEPTH b	LEGEND c	CLASSIFICATION OF MATERIALS (Description) d	% CORE RECOV-ERY e	BOX OR SAMPLE NO. f	RQD g	FRAC-TURES h	REMARKS (Drilling time, water loss, depth weathering, etc., if significant) i
			Broken rock.				40	
1036	114						60	
			Aphanitic, gray, Andesite.	100%	Run 25 Box 12 115.5 120.5	96%		Start 1550 Stop 1612
1034	116						30	
							60	
1032	118							
							35	
							35	
1030	120							
							15	
				100%	Run 26 Box 13 120.5 125.5	76%		Start Stop 1650
1028	122							
							15	
							25	
							35	
							5	
1026	124		Chlorite alt. halo.				30	
							40	
			Andesite breccia.					
							55	
							30	
				100%	Run 27 Box 13	58%	15	August 12 04 Start 0657
1024	126							

DRILLING LOG

DIVISION: Seattle District

INSTALLATION: Howard Hanson Dam

SHEET 10 OF 11 SHEETS

1. PROJECT: Site Exploration
2. LOCATION (Coordinates or Station): Howard Hanson Dam
3. DRILLING AGENCY: Gregory Drilling
4. HOLE NO. (As shown on drawing title and file number): 04-DD-249
5. NAME OF DRILLER: Chris Gregory
6. DIRECTION OF HOLE: [X] VERTICAL [ ] INCLINED _____ DEG. FROM VERT.
7. THICKNESS OF OVERBURDEN: 0.6
8. DEPTH DRILLED INTO ROCK: 141.9
9. TOTAL DEPTH OF HOLE: 142.5
10. SIZE AND TYPE OF BIT: HQ-3
11. DATUM FOR ELEVATION SHOWN (TBM or MSL): MSL
12. MANUFACTURES'S DESIGNATION OF DRILL: CME 850
13. TOTAL NO. OF OVER-BURDEN SAMPLES TAKEN: DISTURBED: UNDISTURBED:
14. TOTAL NUMBER CORE BOXES: 15
15. ELEVATION GROUND WATER:
16. DATE HOLE: STARTED 9 August 04 COMPLETED 12 August 04
17. ELEVATION TOP OF HOLE: 1150.0
18. TOTAL CORE RECOVERY FOR BORING: 100 %
19. SIGNATURE OF INSPECTOR: Tom Danielson

ELEVATION a	DEPTH b	LEGEND c	CLASSIFICATION OF MATERIALS (Description) d	% CORE RECOV-ERY e	BOX OR SAMPLE NO. f	RQD g	FRAC-TURES h	REMARKS (Drilling time, water loss, depth weathering, etc., if significant) i
					125.5 130.0		60 15 20	Stop 0720
1022	128		Strongly fractured rock. Numerous fractures opened when placing in core box.				5 5 90 65	
1020	130		Andesite Porphyry, moderately strong to strong except "punky" areas.	100%	Run 28 Box 14 130.0 135.0	40%	10 25 20 45 60 10 30 40 15	Start 0740 Stop 0755
1018	132							
1016	134		"Punky" rock; clasts of andesite in a strongly chloritized matrix.				30 35	
1014	136		Andesite Porphyry.	100%	Run 29 Box 14 135.0 140.0	88%	60 10 30 30 20	Start 0758 Stop 0822
1012	138						40 15	
1010	140							

DRILLING LOG

DIVISION: Seattle District

INSTALLATION: Howard Hanson Dam

SHEET 11 OF 11 SHEETS

1. PROJECT: Site Exploration
2. LOCATION (Coordinates or Station): Howard Hanson Dam
3. DRILLING AGENCY: Gregory Drilling
4. HOLE NO. (As shown on drawing title and file number): 04-DD-249
5. NAME OF DRILLER: Chris Gregory
6. DIRECTION OF HOLE: [X] VERTICAL [ ] INCLINED _____ DEG. FROM VERT.
7. THICKNESS OF OVERBURDEN: 0.6
8. DEPTH DRILLED INTO ROCK: 141.9
9. TOTAL DEPTH OF HOLE: 142.5
10. SIZE AND TYPE OF BIT: HQ-3
11. DATUM FOR ELEVATION SHOWN (TBM or MSL): MSL
12. MANUFACTURES'S DESIGNATION OF DRILL: CME 850
13. TOTAL NO. OF OVER-BURDEN SAMPLES TAKEN: DISTURBED: UNDISTURBED:
14. TOTAL NUMBER CORE BOXES: 15
15. ELEVATION GROUND WATER:
16. DATE HOLE: STARTED 9 August 04 COMPLETED 12 August 04
17. ELEVATION TOP OF HOLE: 1150.0
18. TOTAL CORE RECOVERY FOR BORING: 100 %
19. SIGNATURE OF INSPECTOR: Tom Danielson

ELEVATION a	DEPTH b	LEGEND c	CLASSIFICATION OF MATERIALS (Description) d	% CORE RECOV-ERY e	BOX OR SAMPLE NO. f	RQD g	FRAC-TURES h	REMARKS (Drilling time, water loss, depth weathering, etc., if significant) i
1008	142		Calcite stringers/blebs to lenses.	100%	Run 30 Box 15 140.0 142.5	100%	60 40 25	Start 0830 Stop 0845
			Bottom of Hole at 142.5' bgs.					

DRILLING LOG

DIVISION: Seattle District

INSTALLATION: Howard Hanson Dam

SHEET 1 OF 11 SHEETS

1. PROJECT: Site Exploration
2. LOCATION (Coordinates or Station): Howard Hanson Dam
3. DRILLING AGENCY: Gregory Drilling
4. HOLE NO. (As shown on drawing title and file number): 04-DD-250
5. NAME OF DRILLER: Chris Gregory
6. DIRECTION OF HOLE: [X] VERTICAL [ ] INCLINED _____ DEG. FROM VERT.
7. THICKNESS OF OVERBURDEN: 0
8. DEPTH DRILLED INTO ROCK: 140
9. TOTAL DEPTH OF HOLE: 140.0
10. SIZE AND TYPE OF BIT: HQ-3
11. DATUM FOR ELEVATION SHOWN (TBM or MSL): MSL
12. MANUFACTURES'S DESIGNATION OF DRILL: CME 850
13. TOTAL NO. OF OVER-BURDEN SAMPLES TAKEN: DISTURBED / UNDISTURBED
14. TOTAL NUMBER CORE BOXES: 14
15. ELEVATION GROUND WATER:
16. DATE HOLE: STARTED 29 July 04 / COMPLETED 3 August 04
17. ELEVATION TOP OF HOLE: 1149.0
18. TOTAL CORE RECOVERY FOR BORING: 100 %
19. SIGNATURE OF INSPECTOR: Tom Danielson

ELEVATION a	DEPTH b	LEGEND c	CLASSIFICATION OF MATERIALS (Description) d	% CORE RECOV-ERY e	BOX OR SAMPLE NO. f	RQD g	FRAC-TURES h	REMARKS (Drilling time, water loss, depth weathering, etc., if significant) i
			Start Coring at 2'.					
1148	2							
			Pyroclastic Andesite, low compressive strength, moderately to strongly altered, alteration disseminated throughout rock mass.	100%	Run 1 Box 1 2.0 5.0	90%	45 30	Start 1505 Stop 1525
1146								
	4							
1144								
				100%	Run 2 Box 1 5.0 10.0	100%	30 40 60	Start 1530 Stop 1550
	6							
1142								
	8							
1140								
	10		Pyroclastic.	100%	Run 3 Box 2 10.0 15.0	100%		Start 1600 Stop 1620
1138								
	12							
1136								
	14							

DRILLING LOG

DIVISION: Seattle District

INSTALLATION: Howard Hanson Dam

SHEET 2 OF 11 SHEETS

1. PROJECT: Site Exploration
2. LOCATION (Coordinates or Station): Howard Hanson Dam
3. DRILLING AGENCY: Gregory Drilling
4. HOLE NO. (As shown on drawing title and file number): 04-DD-250
5. NAME OF DRILLER: Chris Gregory
6. DIRECTION OF HOLE: [X] VERTICAL [ ] INCLINED _____ DEG. FROM VERT.
7. THICKNESS OF OVERBURDEN: 0
8. DEPTH DRILLED INTO ROCK: 140
9. TOTAL DEPTH OF HOLE: 140.0
10. SIZE AND TYPE OF BIT: HQ-3
11. DATUM FOR ELEVATION SHOWN (TBM or MSL): MSL
12. MANUFACTURES'S DESIGNATION OF DRILL: CME 850
13. TOTAL NO. OF OVER-BURDEN SAMPLES TAKEN: DISTURBED: UNDISTURBED:
14. TOTAL NUMBER CORE BOXES: 14
15. ELEVATION GROUND WATER:
16. DATE HOLE: STARTED 29 July 04 COMPLETED 3 August 04
17. ELEVATION TOP OF HOLE: 1149.0
18. TOTAL CORE RECOVERY FOR BORING: 100 %
19. SIGNATURE OF INSPECTOR: Tom Danielson

ELEVATION a	DEPTH b	LEGEND c	CLASSIFICATION OF MATERIALS (Description) d	% CORE RECOV-ERY e	BOX OR SAMPLE NO. f	RQD g	FRAC-TURES h	REMARKS (Drilling time, water loss, depth weathering, etc., if significant) i
1134								
			Pyroclastic Andesite, pale green.	100%	Run 4 Box 2 15.0 20.0			Start 1625 Stop 1650
	16							
1132								
	18							
1130								
	20						10	Fracture probably mechanical.
			Denser/harder. Pyroclastic or Andesite Breccia.	100%	Run 5 Box 3 20.0 21.1	100%		30 July 04 Start 0700 Stop 0720
1128								
				100%	Run 6 Box 3 21.1 25.0	100%		Pulled string and changed bit. Start 0730 Stop 0750
	22							
1126								
	24							
1124							5	
				100%	Run 7 Box 3 25.0 30.0	95%		Start 0755 Stop
	26						20	
							5	
1122							30	
							5	
	28							

DRILLING LOG

DIVISION: Seattle District

INSTALLATION: Howard Hanson Dam

SHEET 3 OF 11 SHEETS

1. PROJECT: Site Exploration
2. LOCATION (Coordinates or Station): Howard Hanson Dam
3. DRILLING AGENCY: Gregory Drilling
4. HOLE NO. (As shown on drawing title and file number): 04-DD-250
5. NAME OF DRILLER: Chris Gregory
6. DIRECTION OF HOLE: [X] VERTICAL [ ] INCLINED _____ DEG. FROM VERT.
7. THICKNESS OF OVERBURDEN: 0
8. DEPTH DRILLED INTO ROCK: 140
9. TOTAL DEPTH OF HOLE: 140.0
10. SIZE AND TYPE OF BIT: HQ-3
11. DATUM FOR ELEVATION SHOWN (TBM or MSL): MSL
12. MANUFACTURES'S DESIGNATION OF DRILL: CME 850
13. TOTAL NO. OF OVER-BURDEN SAMPLES TAKEN: DISTURBED: UNDISTURBED:
14. TOTAL NUMBER CORE BOXES: 14
15. ELEVATION GROUND WATER:
16. DATE HOLE: STARTED 29 July 04 COMPLETED 3 August 04
17. ELEVATION TOP OF HOLE: 1149.0
18. TOTAL CORE RECOVERY FOR BORING: 100 %
19. SIGNATURE OF INSPECTOR: Tom Danielson

ELEVATION a	DEPTH b	LEGEND c	CLASSIFICATION OF MATERIALS (Description) d	% CORE RECOV-ERY e	BOX OR SAMPLE NO. f	RQD g	FRAC-TURES h	REMARKS (Drilling time, water loss, depth weathering, etc., if significant) i
			Denser, more competant rock.				20	
1120								
	30			100%	Run 8 Box 4 30.0 35.0	78%		Start 0845 Stop 0905
1118			Andesite Porphyry, dark green to purple when wet.					
	32						65	Losing water beginning in run #8.
1116							60	
	34						30 30 45 15 5	
1114				100%	Run 9 Box 4 35.0 40.0	91%	30	Start 0910 Stop 0930
	36						15	
1112							10 10	
	38							Water coming up from ground (seeping) next to drill.
1110								
	40			100%	Run 10 Box 5 40.0 45.0	57%	15 25 35 25 25	Start 0935 Stop 1000
1108								
	42							

DRILLING LOG

DIVISION: Seattle District

INSTALLATION: Howard Hanson Dam

SHEET 4 OF 11 SHEETS

1. PROJECT: Site Exploration
2. LOCATION (Coordinates or Station): Howard Hanson Dam
3. DRILLING AGENCY: Gregory Drilling
4. HOLE NO. (As shown on drawing title and file number): 04-DD-250
5. NAME OF DRILLER: Chris Gregory
6. DIRECTION OF HOLE: [X] VERTICAL [ ] INCLINED _____ DEG. FROM VERT.
7. THICKNESS OF OVERBURDEN: 0
8. DEPTH DRILLED INTO ROCK: 140
9. TOTAL DEPTH OF HOLE: 140.0
10. SIZE AND TYPE OF BIT: HQ-3
11. DATUM FOR ELEVATION SHOWN (TBM or MSL): MSL
12. MANUFACTURES'S DESIGNATION OF DRILL: CME 850
13. TOTAL NO. OF OVER-BURDEN SAMPLES TAKEN: DISTURBED _____ UNDISTURBED _____
14. TOTAL NUMBER CORE BOXES: 14
15. ELEVATION GROUND WATER
16. DATE HOLE: STARTED 29 July 04 COMPLETED 3 August 04
17. ELEVATION TOP OF HOLE: 1149.0
18. TOTAL CORE RECOVERY FOR BORING: 100 %
19. SIGNATURE OF INSPECTOR: Tom Danielson

ELEVATION a	DEPTH b	LEGEND c	CLASSIFICATION OF MATERIALS (Description) d	% CORE RECOV-ERY e	BOX OR SAMPLE NO. f	RQD g	FRAC-TURES h	REMARKS (Drilling time, water loss, depth weathering, etc., if significant) i
1106							10 35 35 60	
	44		Inherently weak rock, easily fractured with calcite healed fractures, mechanically opened during drilling, strongly Py, Ch, Ca.					
1104			Dark green and purple Andesite Porphyry.	100%	Run 11 Box 5 45.0 50.0	42%		Start 1020 Stop 1035
	46						60	
1102			Extensive thin (1mm or less) calcite veins.				55 30	
	48		47.5-48.5' Strong Ch/Ca alterations.				65	
1100			Calcite vein 7mm.				60 60 30	
	50						25	
				100%	Run 12 Box 6 50.0 55.0	35%	60	Start 1105 Stop 1115
1098							40 40 60	
	52						40	
1096							60 70 80	
	54						60 70	
1094								Mechanically broken.
				100%	Run 13 Box 6 55.0 60.0	80%	50 45	Start 1125 Stop 1145
	56							

DRILLING LOG

DIVISION: Seattle District

INSTALLATION: Howard Hanson Dam

SHEET 5 OF 11 SHEETS

1. PROJECT: Site Exploration
2. LOCATION (Coordinates or Station): Howard Hanson Dam
3. DRILLING AGENCY: Gregory Drilling
4. HOLE NO. (As shown on drawing title and file number): 04-DD-250
5. NAME OF DRILLER: Chris Gregory
6. DIRECTION OF HOLE: [X] VERTICAL [ ] INCLINED _____ DEG. FROM VERT.
7. THICKNESS OF OVERBURDEN: 0
8. DEPTH DRILLED INTO ROCK: 140
9. TOTAL DEPTH OF HOLE: 140.0
10. SIZE AND TYPE OF BIT: HQ-3
11. DATUM FOR ELEVATION SHOWN (TBM or MSL): MSL
12. MANUFACTURES'S DESIGNATION OF DRILL: CME 850
13. TOTAL NO. OF OVER-BURDEN SAMPLES TAKEN: DISTURBED: ; UNDISTURBED:
14. TOTAL NUMBER CORE BOXES: 14
15. ELEVATION GROUND WATER:
16. DATE HOLE: STARTED 29 July 04; COMPLETED 3 August 04
17. ELEVATION TOP OF HOLE: 1149.0
18. TOTAL CORE RECOVERY FOR BORING: 100 %
19. SIGNATURE OF INSPECTOR: Tom Danielson

ELEVATION a	DEPTH b	LEGEND c	CLASSIFICATION OF MATERIALS (Description) d	% CORE RECOV-ERY e	BOX OR SAMPLE NO. f	RQD g	FRAC-TURES h	REMARKS (Drilling time, water loss, depth weathering, etc., if significant) i
1092			Calcite vein 5mm.				45 45 40 30	
	58		Andesite Porphyry, very dark.				45	
1090							40 60	
	60		Andesite Porphyry, less dark.	100%	Run 14 Box 7 60.0 65.0	100%	60	Start 1150 Stop 1205
1088								
	62						60	
1086							45	
	64						65	
1084							60	
				100%	Run 15 Box 7 65.0 70.0	92%		Start 1215 Stop 1230
	66						45	
1082								
	68		Abundant calcite stringers.				45	
1080							60 80	
	70							

DRILLING LOG

DIVISION: Seattle District

INSTALLATION: Howard Hanson Dam

SHEET 6 OF 11 SHEETS

1. PROJECT: Site Exploration
2. LOCATION (Coordinates or Station): Howard Hanson Dam
3. DRILLING AGENCY: Gregory Drilling
4. HOLE NO. (As shown on drawing title and file number): 04-DD-250
5. NAME OF DRILLER: Chris Gregory
6. DIRECTION OF HOLE: [X] VERTICAL [ ] INCLINED _____ DEG. FROM VERT.
7. THICKNESS OF OVERBURDEN: 0
8. DEPTH DRILLED INTO ROCK: 140
9. TOTAL DEPTH OF HOLE: 140.0
10. SIZE AND TYPE OF BIT: HQ-3
11. DATUM FOR ELEVATION SHOWN (TBM or MSL): MSL
12. MANUFACTURES'S DESIGNATION OF DRILL: CME 850
13. TOTAL NO. OF OVER-BURDEN SAMPLES TAKEN: DISTURBED _____ UNDISTURBED _____
14. TOTAL NUMBER CORE BOXES: 14
15. ELEVATION GROUND WATER: _____
16. DATE HOLE: STARTED 29 July 04 COMPLETED 3 August 04
17. ELEVATION TOP OF HOLE: 1149.0
18. TOTAL CORE RECOVERY FOR BORING: 100 %
19. SIGNATURE OF INSPECTOR: Tom Danielson

ELEVATION a	DEPTH b	LEGEND c	CLASSIFICATION OF MATERIALS (Description) d	% CORE RECOV-ERY e	BOX OR SAMPLE NO. f	RQD g	FRAC-TURES h	REMARKS (Drilling time, water loss, depth weathering, etc., if significant) i
1078			Andesite Breccia, moderately to strongly altered (Ca, Ch).	100%	Run 16 Box 8 70.0 75.0	100%	55	Start 1240 Stop 1250
							15	
	72						40	
1076							20	
							5	
	74						5	
1074				100%	Run 17 Box 8 75.0 80.0	100%		Start 1300 Stop 1315
	76						30	
							20	
1072							40	
							30	
	78		Calcite vein to 1cm.				30	
							45	
1070							20	
							30	
	80		Andesite Breccia, moderately to strongly altered, clasts to 5cm.	100%	Run 18 Box 9 80.0 85.0	96%	20	2 August 04 Start 0815 Stop 0845
1068								
	82							
1066								
	84							

DRILLING LOG

DIVISION: Seattle District

INSTALLATION: Howard Hanson Dam

SHEET 7 OF 11 SHEETS

1. PROJECT: Site Exploration
2. LOCATION (Coordinates or Station): Howard Hanson Dam
3. DRILLING AGENCY: Gregory Drilling
4. HOLE NO. (As shown on drawing title and file number): 04-DD-250
5. NAME OF DRILLER: Chris Gregory
6. DIRECTION OF HOLE: [X] VERTICAL [ ] INCLINED _____ DEG. FROM VERT.
7. THICKNESS OF OVERBURDEN: 0
8. DEPTH DRILLED INTO ROCK: 140
9. TOTAL DEPTH OF HOLE: 140.0
10. SIZE AND TYPE OF BIT: HQ-3
11. DATUM FOR ELEVATION SHOWN (TBM or MSL): MSL
12. MANUFACTURES'S DESIGNATION OF DRILL: CME 850
13. TOTAL NO. OF OVER-BURDEN SAMPLES TAKEN: DISTURBED: UNDISTURBED:
14. TOTAL NUMBER CORE BOXES: 14
15. ELEVATION GROUND WATER:
16. DATE HOLE: STARTED 29 July 04 COMPLETED 3 August 04
17. ELEVATION TOP OF HOLE: 1149.0
18. TOTAL CORE RECOVERY FOR BORING: 100 %
19. SIGNATURE OF INSPECTOR: Tom Danielson

ELEVATION a	DEPTH b	LEGEND c	CLASSIFICATION OF MATERIALS (Description) d	% CORE RECOV-ERY e	BOX OR SAMPLE NO. f	RQD g	FRAC-TURES h	REMARKS (Drilling time, water loss, depth weathering, etc., if significant) i
1064								
			Andesite Breccia, strongly altered (Ca,Ch), slightly softer than predecessor, same olive green/gray color.	100%	Run 19 Box 9 85.0 90.0	90%		Start 0858 Stop 0910
	86							
1062							30	
							60	
	88						30	
1060							30	
	90						60	
				100%	Run 20 Box 10 90.0 95.0	100%		Start 0915 Stop 0940
1058								
	92		Calcite stringers; Ch/Ca slicks along mechanical break.					
1056								
	94						30	
1054				100%	Run 21 Box 10 95.0 100.0	100%		Start 0950 Stop 1007 Complete run - no fractures.
	96							
1052								
	98							

DRILLING LOG

DIVISION: Seattle District

INSTALLATION: Howard Hanson Dam

SHEET 8 OF 11 SHEETS

1. PROJECT: Site Exploration
2. LOCATION (Coordinates or Station): Howard Hanson Dam
3. DRILLING AGENCY: Gregory Drilling
4. HOLE NO. (As shown on drawing title and file number): 04-DD-250
5. NAME OF DRILLER: Chris Gregory
6. DIRECTION OF HOLE: [X] VERTICAL [ ] INCLINED _____ DEG. FROM VERT.
7. THICKNESS OF OVERBURDEN: 0
8. DEPTH DRILLED INTO ROCK: 140
9. TOTAL DEPTH OF HOLE: 140.0
10. SIZE AND TYPE OF BIT: HQ-3
11. DATUM FOR ELEVATION SHOWN (TBM or MSL): MSL
12. MANUFACTURES'S DESIGNATION OF DRILL: CME 850
13. TOTAL NO. OF OVER-BURDEN SAMPLES TAKEN: DISTURBED _____ UNDISTURBED _____
14. TOTAL NUMBER CORE BOXES: 14
15. ELEVATION GROUND WATER: _____
16. DATE HOLE: STARTED 29 July 04 COMPLETED 3 August 04
17. ELEVATION TOP OF HOLE: 1149.0
18. TOTAL CORE RECOVERY FOR BORING: 100 %
19. SIGNATURE OF INSPECTOR: Tom Danielson

ELEVATION a	DEPTH b	LEGEND c	CLASSIFICATION OF MATERIALS (Description) d	% CORE RECOV-ERY e	BOX OR SAMPLE NO. f	RQD g	FRAC-TURES h	REMARKS (Drilling time, water loss, depth weathering, etc., if significant) i
1050								
	100			100%	Run 22 Box 11 100.0 105.0	100%		Start 1340 Stop 1440
1048								
	102							
1046								
	104							
1044								
	106			100%	Run 23 Box 11 105.0 110.0	100%	60	Start 1445 Stop 1530
1042								
	108							
1040								
	110							
1038				100%	Run 24 Box 12 110.0 115.0	61%	5	Start 1540 Stop 1605
	112						5	

DRILLING LOG

DIVISION: Seattle District

INSTALLATION: Howard Hanson Dam

SHEET 9 OF 11 SHEETS

1. PROJECT: Site Exploration
2. LOCATION (Coordinates or Station): Howard Hanson Dam
3. DRILLING AGENCY: Gregory Drilling
4. HOLE NO. (As shown on drawing title and file number): 04-DD-250
5. NAME OF DRILLER: Chris Gregory
6. DIRECTION OF HOLE: [X] VERTICAL [ ] INCLINED _____ DEG. FROM VERT.
7. THICKNESS OF OVERBURDEN: 0
8. DEPTH DRILLED INTO ROCK: 140
9. TOTAL DEPTH OF HOLE: 140.0
10. SIZE AND TYPE OF BIT: HQ-3
11. DATUM FOR ELEVATION SHOWN (TBM or MSL): MSL
12. MANUFACTURES'S DESIGNATION OF DRILL: CME 850
13. TOTAL NO. OF OVER-BURDEN SAMPLES TAKEN: DISTURBED: ; UNDISTURBED:
14. TOTAL NUMBER CORE BOXES: 14
15. ELEVATION GROUND WATER:
16. DATE HOLE: STARTED 29 July 04; COMPLETED 3 August 04
17. ELEVATION TOP OF HOLE: 1149.0
18. TOTAL CORE RECOVERY FOR BORING: 100 %
19. SIGNATURE OF INSPECTOR: Tom Danielson

ELEVATION a	DEPTH b	LEGEND c	CLASSIFICATION OF MATERIALS (Description) d	% CORE RECOV-ERY e	BOX OR SAMPLE NO. f	RQD g	FRAC-TURES h	REMARKS (Drilling time, water loss, depth weathering, etc., if significant) i
1036			Fractures and partially penetrating fractures (6 fractures/7 tenths).				0 0 0 0 0 0 15 5 5 5	
	114							
1034				100%	Run 25 Box 12 115.0 120.0	56%	15	Start 1625 Stop 1650
	116						0 0 0 0 0 0 0 0 0 0 0	
1032			Same as at 112'.					
	118		Small fragments of host rock.					
1030							0 0 0 10	
	120		Andesite Breccia.	100%	Run 26 Box 13 120.0 125.0			Start 1700 Stop 1730
1028			Discoloration along fracture - probably selective alteration.				35 30 5	
	122							
1026							90	
	124							
1024				100%	Run 27 Box 13 125.0 130.0	88%		3 August 04 Start 0650 Stop 0720
	126							

DRILLING LOG

DIVISION: Seattle District

INSTALLATION: Howard Hanson Dam

SHEET 10 OF 11 SHEETS

1. PROJECT: Site Exploration
2. LOCATION (Coordinates or Station): Howard Hanson Dam
3. DRILLING AGENCY: Gregory Drilling
4. HOLE NO. (As shown on drawing title and file number): 04-DD-250
5. NAME OF DRILLER: Chris Gregory
6. DIRECTION OF HOLE: [X] VERTICAL [ ] INCLINED _____ DEG. FROM VERT.
7. THICKNESS OF OVERBURDEN: 0
8. DEPTH DRILLED INTO ROCK: 140
9. TOTAL DEPTH OF HOLE: 140.0
10. SIZE AND TYPE OF BIT: HQ-3
11. DATUM FOR ELEVATION SHOWN (TBM or MSL): MSL
12. MANUFACTURES'S DESIGNATION OF DRILL: CME 850
13. TOTAL NO. OF OVER-BURDEN SAMPLES TAKEN: DISTURBED: ; UNDISTURBED:
14. TOTAL NUMBER CORE BOXES: 14
15. ELEVATION GROUND WATER:
16. DATE HOLE: STARTED 29 July 04; COMPLETED 3 August 04
17. ELEVATION TOP OF HOLE: 1149.0
18. TOTAL CORE RECOVERY FOR BORING: 100 %
19. SIGNATURE OF INSPECTOR: Tom Danielson

ELEVATION a	DEPTH b	LEGEND c	CLASSIFICATION OF MATERIALS (Description) d	% CORE RECOV-ERY e	BOX OR SAMPLE NO. f	RQD g	FRAC-TURES h	REMARKS (Drilling time, water loss, depth weathering, etc., if significant) i
1022								
	128						0	
							20	
1020							20	
							30	
	130							
			Andesite Breccia, olive green matrix with predominant dar red aphanitic andesite fragments.	100%	Run 28 Box 14 130.0 135.0	100%		Start 0755 Stop 0845
1018								
	132		Calcite stringers to 5mm.					
1016							20	
	134						60	
							10	
1014				100%	Run 29 Box 14 135.0 140.0	94%	10	Start 0915 Stop 1005
	136							
1012							5	
	138						10	
1010							10	
	140							

DRILLING LOG

DIVISION: Seattle District

INSTALLATION: Howard Hanson Dam

SHEET 11 OF 11 SHEETS

1. PROJECT: Site Exploration
2. LOCATION (Coordinates or Station): Howard Hanson Dam
3. DRILLING AGENCY: Gregory Drilling
4. HOLE NO. (As shown on drawing title and file number): 04-DD-250
5. NAME OF DRILLER: Chris Gregory
6. DIRECTION OF HOLE: [X] VERTICAL [ ] INCLINED _____ DEG. FROM VERT.
7. THICKNESS OF OVERBURDEN: 0
8. DEPTH DRILLED INTO ROCK: 140
9. TOTAL DEPTH OF HOLE: 140.0
10. SIZE AND TYPE OF BIT: HQ-3
11. DATUM FOR ELEVATION SHOWN (TBM or MSL): MSL
12. MANUFACTURES'S DESIGNATION OF DRILL: CME 850
13. TOTAL NO. OF OVER-BURDEN SAMPLES TAKEN: DISTURBED: ; UNDISTURBED:
14. TOTAL NUMBER CORE BOXES: 14
15. ELEVATION GROUND WATER:
16. DATE HOLE: STARTED 29 July 04; COMPLETED 3 August 04
17. ELEVATION TOP OF HOLE: 1149.0
18. TOTAL CORE RECOVERY FOR BORING: 100 %
19. SIGNATURE OF INSPECTOR: Tom Danielson

ELEVATION a	DEPTH b	LEGEND c	CLASSIFICATION OF MATERIALS (Description) d	% CORE RECOV-ERY e	BOX OR SAMPLE NO. f	RQD g	FRAC-TURES h	REMARKS (Drilling time, water loss, depth weathering, etc., if significant) i
			Bottom of Hole at 140' bgs.					

DRILLING LOG

DIVISION: Seattle District

INSTALLATION: Howard Hanson Dam

SHEET 1 OF 11 SHEETS

1. PROJECT: Site Exploration
2. LOCATION (Coordinates or Station): Howard Hanson Dam
3. DRILLING AGENCY: Gregory Drilling
4. HOLE NO. (As shown on drawing title and file number): 04-DD-251
5. NAME OF DRILLER: Chris Gregory
6. DIRECTION OF HOLE: [X] VERTICAL [ ] INCLINED _____ DEG. FROM VERT.
7. THICKNESS OF OVERBURDEN: 0
8. DEPTH DRILLED INTO ROCK: 144.2
9. TOTAL DEPTH OF HOLE: 144.2
10. SIZE AND TYPE OF BIT: HQ-3
11. DATUM FOR ELEVATION SHOWN (TBM or MSL): MSL
12. MANUFACTURES'S DESIGNATION OF DRILL: CME 850
13. TOTAL NO. OF OVER-BURDEN SAMPLES TAKEN: DISTURBED _____ UNDISTURBED _____
14. TOTAL NUMBER CORE BOXES: 15
15. ELEVATION GROUND WATER: _____
16. DATE HOLE: STARTED 21 July 04 COMPLETED 24 July 04
17. ELEVATION TOP OF HOLE: 1149.0
18. TOTAL CORE RECOVERY FOR BORING: 97 %
19. SIGNATURE OF INSPECTOR: Tom Danielson

ELEVATION a	DEPTH b	LEGEND c	CLASSIFICATION OF MATERIALS (Description) d	% CORE RECOV-ERY e	BOX OR SAMPLE NO. f	RQD g	FRAC-TURES h	REMARKS (Drilling time, water loss, depth weathering, etc., if significant) i
1148			Pyroclastic, very fragmented but with minimal alteration along fractures (blast damage?).	75%	Run 1 Box 1 0.0 4.0	0%		Start 1335 Stop 1350
	2							Very rapid advance from ~2 to 2.8'.
1146								
	4							
				93%	Run 2 Box 1 4.0 7.8	86%	5 5	Start 1605 Stop 1630
1144			Rubble.					Still losing circulation.
	6		Potential core loss area					
1142								
	8		Triconed - no recoverey.					
1140								
	10							
			Rubble from drilling (?)	95%	Run 3 Box 2 10.0 14.2			Start 1250 Stop 1340
1138							0	
			Smooth, planar fracture - may be related to drilling (circular pattern).					
	12							
1136			Also some evidence of coring related destruction of asperities.				15	
	14						30	

DRILLING LOG

DIVISION: Seattle District

INSTALLATION: Howard Hanson Dam

SHEET 2 OF 11 SHEETS

1. PROJECT: Site Exploration
2. LOCATION (Coordinates or Station): Howard Hanson Dam
3. DRILLING AGENCY: Gregory Drilling
4. HOLE NO. (As shown on drawing title and file number): 04-DD-251
5. NAME OF DRILLER: Chris Gregory
6. DIRECTION OF HOLE: [X] VERTICAL [ ] INCLINED _____ DEG. FROM VERT.
7. THICKNESS OF OVERBURDEN: 0
8. DEPTH DRILLED INTO ROCK: 144.2
9. TOTAL DEPTH OF HOLE: 144.2
10. SIZE AND TYPE OF BIT: HQ-3
11. DATUM FOR ELEVATION SHOWN (TBM or MSL): MSL
12. MANUFACTURES'S DESIGNATION OF DRILL: CME 850
13. TOTAL NO. OF OVER-BURDEN SAMPLES TAKEN: DISTURBED _____ UNDISTURBED _____
14. TOTAL NUMBER CORE BOXES: 15
15. ELEVATION GROUND WATER: _____
16. DATE HOLE: STARTED 21 July 04 COMPLETED 24 July 04
17. ELEVATION TOP OF HOLE: 1149.0
18. TOTAL CORE RECOVERY FOR BORING: 97 %
19. SIGNATURE OF INSPECTOR: Tom Danielson

ELEVATION a	DEPTH b	LEGEND c	CLASSIFICATION OF MATERIALS (Description) d	% CORE RECOV-ERY e	BOX OR SAMPLE NO. f	RQD g	FRAC-TURES h	REMARKS (Drilling time, water loss, depth weathering, etc., if significant) i
			Andesite pyroclastic, fairly competant.	100%	Run 4 Box 2 14.2 19.2	96%		Start 1350 Stop 1420
1134								
	16		Transition to Andesite Breccia.					
							65	
1132								
	18							
1130							15	
				100%	Run 5 Box 3 19.2 22.1	100%		Start 1430 Stop 1500
	20							
1128								
							30	
	22							
				100%	Run 6 Box 3 22.1 24.2	100%		Start 1305 Stop 1315
1126								
	24							
			Purple and green Andesite Breccia.	96%	Run 7 Box 5 24.2 29.2	100%		
1124								
	26							
							70	
1122								
	28							

DRILLING LOG

DIVISION: Seattle District

INSTALLATION: Howard Hanson Dam

SHEET 3 OF 11 SHEETS

1. PROJECT: Site Exploration
2. LOCATION (Coordinates or Station): Howard Hanson Dam
3. DRILLING AGENCY: Gregory Drilling
4. HOLE NO. (As shown on drawing title and file number): 04-DD-251
5. NAME OF DRILLER: Chris Gregory
6. DIRECTION OF HOLE: [X] VERTICAL [ ] INCLINED _____ DEG. FROM VERT.
7. THICKNESS OF OVERBURDEN: 0
8. DEPTH DRILLED INTO ROCK: 144.2
9. TOTAL DEPTH OF HOLE: 144.2
10. SIZE AND TYPE OF BIT: HQ-3
11. DATUM FOR ELEVATION SHOWN (TBM or MSL): MSL
12. MANUFACTURES'S DESIGNATION OF DRILL: CME 850
13. TOTAL NO. OF OVER-BURDEN SAMPLES TAKEN: DISTURBED _____ UNDISTURBED _____
14. TOTAL NUMBER CORE BOXES: 15
15. ELEVATION GROUND WATER: _____
16. DATE HOLE: STARTED 21 July 04 COMPLETED 24 July 04
17. ELEVATION TOP OF HOLE: 1149.0
18. TOTAL CORE RECOVERY FOR BORING: 97 %
19. SIGNATURE OF INSPECTOR: Tom Danielson

ELEVATION a	DEPTH b	LEGEND c	CLASSIFICATION OF MATERIALS (Description) d	% CORE RECOV-ERY e	BOX OR SAMPLE NO. f	RQD g	FRAC-TURES h	REMARKS (Drilling time, water loss, depth weathering, etc., if significant) i
1120								
	30			100%	Run 8 Box 4 29.2 34.2	98%	55	Start 1550 Stop 1625
1118								
	32							
1116							0 10	
	34							
1114				100%	Run 9 Box 4 34.2 39.2	90%	30 5	Start 1625 Stop 1650
	36							
1112							5	
	38						15 15	
1110								
	40			100%	Run 10 Box 5 39.2 44.2	96%		Start 1650 Stop 1715
1108								
	42		Iron stain 2cm into wall rock.				5 10	

DRILLING LOG

DIVISION: Seattle District

INSTALLATION: Howard Hanson Dam

SHEET 4 OF 11 SHEETS

1. PROJECT: Site Exploration
2. LOCATION (Coordinates or Station): Howard Hanson Dam
3. DRILLING AGENCY: Gregory Drilling
4. HOLE NO. (As shown on drawing title and file number): 04-DD-251
5. NAME OF DRILLER: Chris Gregory
6. DIRECTION OF HOLE: [X] VERTICAL [ ] INCLINED _____ DEG. FROM VERT.
7. THICKNESS OF OVERBURDEN: 0
8. DEPTH DRILLED INTO ROCK: 144.2
9. TOTAL DEPTH OF HOLE: 144.2
10. SIZE AND TYPE OF BIT: HQ-3
11. DATUM FOR ELEVATION SHOWN (TBM or MSL): MSL
12. MANUFACTURES'S DESIGNATION OF DRILL: CME 850
13. TOTAL NO. OF OVER-BURDEN SAMPLES TAKEN: DISTURBED: UNDISTURBED:
14. TOTAL NUMBER CORE BOXES: 15
15. ELEVATION GROUND WATER:
16. DATE HOLE: STARTED 21 July 04 COMPLETED 24 July 04
17. ELEVATION TOP OF HOLE: 1149.0
18. TOTAL CORE RECOVERY FOR BORING: 97 %
19. SIGNATURE OF INSPECTOR: Tom Danielson

ELEVATION a	DEPTH b	LEGEND c	CLASSIFICATION OF MATERIALS (Description) d	% CORE RECOV-ERY e	BOX OR SAMPLE NO. f	RQD g	FRAC-TURES h	REMARKS (Drilling time, water loss, depth weathering, etc., if significant) i
1106							10 5 10	
	44		Andesite	100%	Run 11 Box 5 44.2 49.2	86%		23 July 04 Start 0700 Stop 0725
1104								
	46						15 10	
1102			Calcite stringers. Brecciated annealed zone.				20	
	48						65	
1100							60 35	
	50			100%	Run 12 Box 6 49.2 54.2	100%	35 70	Start 0730 Stop 0800
1098								
	52						30 15	
1096							35	
	54							
1094				100%	Run 13 Box 6 54.2 59.2	100%	45	Start 0805 Stop 0825
	56		Calcite stringers to 5mm.					

DRILLING LOG

DIVISION: Seattle District

INSTALLATION: Howard Hanson Dam

SHEET 5 OF 11 SHEETS

1. PROJECT: Site Exploration
2. LOCATION (Coordinates or Station): Howard Hanson Dam
3. DRILLING AGENCY: Gregory Drilling
4. HOLE NO. (As shown on drawing title and file number): 04-DD-251
5. NAME OF DRILLER: Chris Gregory
6. DIRECTION OF HOLE: [X] VERTICAL [ ] INCLINED _____ DEG. FROM VERT.
7. THICKNESS OF OVERBURDEN: 0
8. DEPTH DRILLED INTO ROCK: 144.2
9. TOTAL DEPTH OF HOLE: 144.2
10. SIZE AND TYPE OF BIT: HQ-3
11. DATUM FOR ELEVATION SHOWN (TBM or MSL): MSL
12. MANUFACTURES'S DESIGNATION OF DRILL: CME 850
13. TOTAL NO. OF OVER-BURDEN SAMPLES TAKEN: DISTURBED / UNDISTURBED
14. TOTAL NUMBER CORE BOXES: 15
15. ELEVATION GROUND WATER:
16. DATE HOLE: STARTED 21 July 04 / COMPLETED 24 July 04
17. ELEVATION TOP OF HOLE: 1149.0
18. TOTAL CORE RECOVERY FOR BORING: 97 %
19. SIGNATURE OF INSPECTOR: Tom Danielson

ELEVATION a	DEPTH b	LEGEND c	CLASSIFICATION OF MATERIALS (Description) d	% CORE RECOV-ERY e	BOX OR SAMPLE NO. f	RQD g	FRAC-TURES h	REMARKS (Drilling time, water loss, depth weathering, etc., if significant) i
1092							55	
	58						75	
1090			Calcite and or chlorite stringers to 8mm.					
				100%	Run 14 Box 7 59.2 64.2	54%	80	Start 0830 Stop 0850
	60		Previous brecciation, chlorite matrix.				15	
1088								
	62						70 0 60	
1086							60	
							55	
	64						70	
			Transition to Basalt.	56%	Run 15 Box 7 64.2 69.2	14%	70	Start 0925 Stop 0940
1084			Extensive Ca/Ch nodules/stringers to 5mm.				10 70 70	
	66						45	
1082			Rubble/Core Loss.					
	68							
1080							50	
				100%	Run 16 Box 8 69.2	68%		Start 0945 Stop 1005
	70							

DRILLING LOG

DIVISION: Seattle District

INSTALLATION: Howard Hanson Dam

SHEET 6 OF 11 SHEETS

1. PROJECT: Site Exploration
2. LOCATION (Coordinates or Station): Howard Hanson Dam
3. DRILLING AGENCY: Gregory Drilling
4. HOLE NO. (As shown on drawing title and file number): 04-DD-251
5. NAME OF DRILLER: Chris Gregory
6. DIRECTION OF HOLE: [X] VERTICAL [ ] INCLINED _____ DEG. FROM VERT.
7. THICKNESS OF OVERBURDEN: 0
8. DEPTH DRILLED INTO ROCK: 144.2
9. TOTAL DEPTH OF HOLE: 144.2
10. SIZE AND TYPE OF BIT: HQ-3
11. DATUM FOR ELEVATION SHOWN (TBM or MSL): MSL
12. MANUFACTURES'S DESIGNATION OF DRILL: CME 850
13. TOTAL NO. OF OVER-BURDEN SAMPLES TAKEN: DISTURBED: UNDISTURBED:
14. TOTAL NUMBER CORE BOXES: 15
15. ELEVATION GROUND WATER:
16. DATE HOLE: STARTED 21 July 04 COMPLETED 24 July 04
17. ELEVATION TOP OF HOLE: 1149.0
18. TOTAL CORE RECOVERY FOR BORING: 97 %
19. SIGNATURE OF INSPECTOR: Tom Danielson

ELEVATION a	DEPTH b	LEGEND c	CLASSIFICATION OF MATERIALS (Description) d	% CORE RECOV-ERY e	BOX OR SAMPLE NO. f	RQD g	FRAC-TURES h	REMARKS (Drilling time, water loss, depth weathering, etc., if significant) i
					73.5			
1078							40	
							35	
							30	
	72							
							35	
1076			Becoming coarser and denser - hypabyssal?				50	
							70	
							15	
	74			100%	Run 17 Box 8 73.5	0%	45	Start Stop
				100%	74.2 Run 18 Box 8 74.2 79.2	94%		Start 1025 Stop 1045
1074							30	
							30	
	76							
							45	
1072								
	78							
1070			Basalt/sub-volcanic.					
				100%	Run 19 Box 9 79.2 84.2	77%	75	Start 1050 Stop 1110
	80							
							30	
1068							15	
							60	
							35	
	82							
							35	
1066							15	
							55	
	84						60	

DRILLING LOG

DIVISION: Seattle District

INSTALLATION: Howard Hanson Dam

SHEET 7 OF 11 SHEETS

1. PROJECT: Site Exploration
2. LOCATION (Coordinates or Station): Howard Hanson Dam
3. DRILLING AGENCY: Gregory Drilling
4. HOLE NO. (As shown on drawing title and file number): 04-DD-251
5. NAME OF DRILLER: Chris Gregory
6. DIRECTION OF HOLE: [X] VERTICAL [ ] INCLINED _____ DEG. FROM VERT.
7. THICKNESS OF OVERBURDEN: 0
8. DEPTH DRILLED INTO ROCK: 144.2
9. TOTAL DEPTH OF HOLE: 144.2
10. SIZE AND TYPE OF BIT: HQ-3
11. DATUM FOR ELEVATION SHOWN (TBM or MSL): MSL
12. MANUFACTURES'S DESIGNATION OF DRILL: CME 850
13. TOTAL NO. OF OVER-BURDEN SAMPLES TAKEN: DISTURBED: UNDISTURBED:
14. TOTAL NUMBER CORE BOXES: 15
15. ELEVATION GROUND WATER:
16. DATE HOLE: STARTED 21 July 04 COMPLETED 24 July 04
17. ELEVATION TOP OF HOLE: 1149.0
18. TOTAL CORE RECOVERY FOR BORING: 97 %
19. SIGNATURE OF INSPECTOR: Tom Danielson

ELEVATION a	DEPTH b	LEGEND c	CLASSIFICATION OF MATERIALS (Description) d	% CORE RECOV-ERY e	BOX OR SAMPLE NO. f	RQD g	FRAC-TURES h	REMARKS (Drilling time, water loss, depth weathering, etc., if significant) i
1064				100%	Run 20 Box 9 84.2 89.2	77%	80 60 70 60	Start 1115 Stop 1135
	86							
1062			Finer grained, competent basalt.					
	88						30	
1060								
				100%	Run 21 Box 10 89.2 94.2	68%	55 35	Start Stop 1155
	90							
1058								
	92						45 60 30 30	
1056								
							40 20 15	
	94							
				100%	Run 22 Box 10 94.2 99.2	76%	50	Start 1200 Stop 1220
1054								
	96						70 35	
							35	
1052								
							45	
	98						30	

DRILLING LOG

DIVISION: Seattle District

INSTALLATION: Howard Hanson Dam

SHEET 8 OF 11 SHEETS

1. PROJECT: Site Exploration
2. LOCATION (Coordinates or Station): Howard Hanson Dam
3. DRILLING AGENCY: Gregory Drilling
4. HOLE NO. (As shown on drawing title and file number): 04-DD-251
5. NAME OF DRILLER: Chris Gregory
6. DIRECTION OF HOLE: [X] VERTICAL [ ] INCLINED _____ DEG. FROM VERT.
7. THICKNESS OF OVERBURDEN: 0
8. DEPTH DRILLED INTO ROCK: 144.2
9. TOTAL DEPTH OF HOLE: 144.2
10. SIZE AND TYPE OF BIT: HQ-3
11. DATUM FOR ELEVATION SHOWN (TBM or MSL): MSL
12. MANUFACTURES'S DESIGNATION OF DRILL: CME 850
13. TOTAL NO. OF OVER-BURDEN SAMPLES TAKEN: DISTURBED: UNDISTURBED:
14. TOTAL NUMBER CORE BOXES: 15
15. ELEVATION GROUND WATER:
16. DATE HOLE: STARTED 21 July 04 COMPLETED 24 July 04
17. ELEVATION TOP OF HOLE: 1149.0
18. TOTAL CORE RECOVERY FOR BORING: 97 %
19. SIGNATURE OF INSPECTOR: Tom Danielson

ELEVATION a	DEPTH b	LEGEND c	CLASSIFICATION OF MATERIALS (Description) d	% CORE RECOV-ERY e	BOX OR SAMPLE NO. f	RQD g	FRAC-TURES h	REMARKS (Drilling time, water loss, depth weathering, etc., if significant) i
1050							75 50	
	100		Transition to a coarser rock Also to Andesite?	100%	Run 23 Box 11 99.2 104.2	100%	43	Start 1225 Stop 1245
1048								
	102						30 70	
1046								
	104						50	
				100%	Run 24 Box 11 104.2 109.2	100%	60	Start 1305 Stop 1325
1044								
	106		Iron staining.					
1042								
	108						30 30	
1040							80 60	
				100%	Run 25 Box 12 109.2 114.2	90%		Start 1345 Stop 1405
	110						50	
			Picking up breccia fragments/xenoliths.					
1038							35	
	112							

DRILLING LOG

DIVISION: Seattle District

INSTALLATION: Howard Hanson Dam

SHEET 9 OF 11 SHEETS

1. PROJECT: Site Exploration
2. LOCATION (Coordinates or Station): Howard Hanson Dam
3. DRILLING AGENCY: Gregory Drilling
4. HOLE NO. (As shown on drawing title and file number): 04-DD-251
5. NAME OF DRILLER: Chris Gregory
6. DIRECTION OF HOLE: [X] VERTICAL [ ] INCLINED _____ DEG. FROM VERT.
7. THICKNESS OF OVERBURDEN: 0
8. DEPTH DRILLED INTO ROCK: 144.2
9. TOTAL DEPTH OF HOLE: 144.2
10. SIZE AND TYPE OF BIT: HQ-3
11. DATUM FOR ELEVATION SHOWN (TBM or MSL): MSL
12. MANUFACTURES'S DESIGNATION OF DRILL: CME 850
13. TOTAL NO. OF OVER-BURDEN SAMPLES TAKEN: DISTURBED: UNDISTURBED:
14. TOTAL NUMBER CORE BOXES: 15
15. ELEVATION GROUND WATER:
16. DATE HOLE: STARTED 21 July 04 COMPLETED 24 July 04
17. ELEVATION TOP OF HOLE: 1149.0
18. TOTAL CORE RECOVERY FOR BORING: 97 %
19. SIGNATURE OF INSPECTOR: Tom Danielson

ELEVATION a	DEPTH b	LEGEND c	CLASSIFICATION OF MATERIALS (Description) d	% CORE RECOVERY e	BOX OR SAMPLE NO. f	RQD g	FRACTURES h	REMARKS (Drilling time, water loss, depth weathering, etc., if significant) i
			Calcite stringers up to 4mm.				45 15	
1036	114							
			Andesite.	100%	Run 26 Box 12 114.2 119.2	88%	50 40 20	Start 0730 Stop 0755
1034	116							
1032	118							
1030			Calcite stringers and nodules to 2cm.					
				100%	Run 27 Box 13 119.2 124.2	100%	15	Start 0805 Stop 0822
	120		Andesite with purple and green coloration.					
1028	122							
1026	124						35	
				100%	Run 28 Box 13 124.2 129.2	95%		Start 0830 Stop 0850
1024	126							

DRILLING LOG

DIVISION: Seattle District

INSTALLATION: Howard Hanson Dam

SHEET 10 OF 11 SHEETS

1. PROJECT: Site Exploration
2. LOCATION (Coordinates or Station): Howard Hanson Dam
3. DRILLING AGENCY: Gregory Drilling
4. HOLE NO. (As shown on drawing title and file number): 04-DD-251
5. NAME OF DRILLER: Chris Gregory
6. DIRECTION OF HOLE: [X] VERTICAL [ ] INCLINED _____ DEG. FROM VERT.
7. THICKNESS OF OVERBURDEN: 0
8. DEPTH DRILLED INTO ROCK: 144.2
9. TOTAL DEPTH OF HOLE: 144.2
10. SIZE AND TYPE OF BIT: HQ-3
11. DATUM FOR ELEVATION SHOWN (TBM or MSL): MSL
12. MANUFACTURES'S DESIGNATION OF DRILL: CME 850
13. TOTAL NO. OF OVER-BURDEN SAMPLES TAKEN: DISTURBED: ; UNDISTURBED:
14. TOTAL NUMBER CORE BOXES: 15
15. ELEVATION GROUND WATER:
16. DATE HOLE: STARTED 21 July 04; COMPLETED 24 July 04
17. ELEVATION TOP OF HOLE: 1149.0
18. TOTAL CORE RECOVERY FOR BORING: 97 %
19. SIGNATURE OF INSPECTOR: Tom Danielson

ELEVATION a	DEPTH b	LEGEND c	CLASSIFICATION OF MATERIALS (Description) d	% CORE RECOV-ERY e	BOX OR SAMPLE NO. f	RQD g	FRAC-TURES h	REMARKS (Drilling time, water loss, depth weathering, etc., if significant) i
1022							35	
							35	
	128							
							15	
1020							25	
				94%	Run 29 Box 14 129.2 134.2	78%		Start 0900 Stop 0918
	130							
							25	
1018							25	
			130.5-132.2' Brecciated and annealed region.				20	
	132							
							35	
							0	
1016			Void.				45	Very fast for 3" at ~132.5'.
							15	
	134							
				100%	Run 30 Box 14 134.2 139.2	42%		Start 0925 Stop 0942
1014								
	136							
1012								
	138							
1010								
			Andesite, breccia fragments in upper 2/3 of run, up to 4cm.	100%	Run 31 Box 15 139.2	100%		Start 0945 Stop 1005
	140							

DRILLING LOG

DIVISION: Seattle District

INSTALLATION: Howard Hanson Dam

SHEET 11 OF 11 SHEETS

1. PROJECT: Site Exploration
2. LOCATION (Coordinates or Station): Howard Hanson Dam
3. DRILLING AGENCY: Gregory Drilling
4. HOLE NO. (As shown on drawing title and file number): 04-DD-251
5. NAME OF DRILLER: Chris Gregory
6. DIRECTION OF HOLE: [X] VERTICAL [ ] INCLINED _____ DEG. FROM VERT.
7. THICKNESS OF OVERBURDEN: 0
8. DEPTH DRILLED INTO ROCK: 144.2
9. TOTAL DEPTH OF HOLE: 144.2
10. SIZE AND TYPE OF BIT: HQ-3
11. DATUM FOR ELEVATION SHOWN (TBM or MSL): MSL
12. MANUFACTURES'S DESIGNATION OF DRILL: CME 850
13. TOTAL NO. OF OVER-BURDEN SAMPLES TAKEN: DISTURBED: UNDISTURBED:
14. TOTAL NUMBER CORE BOXES: 15
15. ELEVATION GROUND WATER:
16. DATE HOLE: STARTED 21 July 04 COMPLETED 24 July 04
17. ELEVATION TOP OF HOLE: 1149.0
18. TOTAL CORE RECOVERY FOR BORING: 97 %
19. SIGNATURE OF INSPECTOR: Tom Danielson

ELEVATION a	DEPTH b	LEGEND c	CLASSIFICATION OF MATERIALS (Description) d	% CORE RECOV-ERY e	BOX OR SAMPLE NO. f	RQD g	FRAC-TURES h	REMARKS (Drilling time, water loss, depth weathering, etc., if significant) i
1008					144.2			
							35	
	142							
1006								
	144							
			Bottom of Hole at 144.2' bgs.					

DRILLING LOG

DIVISION: Seattle District

INSTALLATION: Howard Hanson Dam

SHEET 1 OF 8 SHEETS

1. PROJECT: Site Exploration
2. LOCATION (Coordinates or Station): Howard Hanson Dam
3. DRILLING AGENCY: Gregory Drilling
4. HOLE NO. (As shown on drawing title and file number): 04-DD-252
5. NAME OF DRILLER: Chris Gregory
6. DIRECTION OF HOLE: [X] VERTICAL [ ] INCLINED _____ DEG. FROM VERT.
7. THICKNESS OF OVERBURDEN: 0
8. DEPTH DRILLED INTO ROCK: 109.25
9. TOTAL DEPTH OF HOLE: 109.3
10. SIZE AND TYPE OF BIT: HQ-3
11. DATUM FOR ELEVATION SHOWN (TBM or MSL): MSL
12. MANUFACTURES'S DESIGNATION OF DRILL: CME 850
13. TOTAL NO. OF OVER-BURDEN SAMPLES TAKEN: DISTURBED: UNDISTURBED:
14. TOTAL NUMBER CORE BOXES: 11
15. ELEVATION GROUND WATER:
16. DATE HOLE: STARTED 15 July 04 COMPLETED 19 July 04
17. ELEVATION TOP OF HOLE: 1148.0
18. TOTAL CORE RECOVERY FOR BORING: 97 %
19. SIGNATURE OF INSPECTOR: Tom Danielson

ELEVATION a	DEPTH b	LEGEND c	CLASSIFICATION OF MATERIALS (Description) d	% CORE RECOV-ERY e	BOX OR SAMPLE NO. f	RQD g	FRAC-TURES h	REMARKS (Drilling time, water loss, depth weathering, etc., if significant) i
			Light Gray/green Andesite Pyroclastic, relatively coarse fragments.	97%	Run 1 Box 1 0.0 4.3	91%	30 55 40	Start 1615 Stop 1640
1146	2							
1144	4							
				100%	Run 2 Box 1 4.3 9.3	100%	50 0 70 70 5 30	16 July 04 Start 0750 Stop 0810
1142	6							
1140	8		Gravel and gouge filled, Iron stained seam.					
				100%	Run 3 Box 2 9.3 14.3	100%	60	Start 0820 Stop 0840
1138	10							
1136	12							
1134	14							

DRILLING LOG

DIVISION: Seattle District

INSTALLATION: Howard Hanson Dam

SHEET 2 OF 8 SHEETS

1. PROJECT: Site Exploration
2. LOCATION (Coordinates or Station): Howard Hanson Dam
3. DRILLING AGENCY: Gregory Drilling
4. HOLE NO. (As shown on drawing title and file number): 04-DD-252
5. NAME OF DRILLER: Chris Gregory
6. DIRECTION OF HOLE: [X] VERTICAL [ ] INCLINED _____ DEG. FROM VERT.
7. THICKNESS OF OVERBURDEN: 0
8. DEPTH DRILLED INTO ROCK: 109.25
9. TOTAL DEPTH OF HOLE: 109.3
10. SIZE AND TYPE OF BIT: HQ-3
11. DATUM FOR ELEVATION SHOWN (TBM or MSL): MSL
12. MANUFACTURES'S DESIGNATION OF DRILL: CME 850
13. TOTAL NO. OF OVER-BURDEN SAMPLES TAKEN: DISTURBED: UNDISTURBED:
14. TOTAL NUMBER CORE BOXES: 11
15. ELEVATION GROUND WATER:
16. DATE HOLE: STARTED 15 July 04 COMPLETED 19 July 04
17. ELEVATION TOP OF HOLE: 1148.0
18. TOTAL CORE RECOVERY FOR BORING: 97 %
19. SIGNATURE OF INSPECTOR: Tom Danielson

ELEVATION a	DEPTH b	LEGEND c	CLASSIFICATION OF MATERIALS (Description) d	% CORE RECOV-ERY e	BOX OR SAMPLE NO. f	RQD g	FRAC-TURES h	REMARKS (Drilling time, water loss, depth weathering, etc., if significant) i
			Andesite pyroclastic with coarse/medium fragments, moderately altered.	100%	Run 4 Box 2 14.3 19.3	96%		Start 0845 Stop 0915
1132	16							
1130	18						25 45	
			Gradually becoming coarser (clasts up to 6cm).	98%	Run 5 Box 3 19.3 24.3	98%	0 20	Start 0920 Stop 0945
1128	20							
			Fracture orientation driven by large clasts.				5	
							0	
1126	22							
			Show evidence of wear from rotation of string, may have been an existing fracture.				0	
1124	24							
			Andesite pyroclastic, moderately altered, alteration does not concentrate in fractures.	100%	Run 6 Box 3 24.3 29.3	90%	30	Start 0950 Stop 1010
1122	26						0 0 25	
1120	28						0 0	

DRILLING LOG

DIVISION: Seattle District

INSTALLATION: Howard Hanson Dam

SHEET 3 OF 8 SHEETS

1. PROJECT: Site Exploration
2. LOCATION (Coordinates or Station): Howard Hanson Dam
3. DRILLING AGENCY: Gregory Drilling
4. HOLE NO. (As shown on drawing title and file number): 04-DD-252
5. NAME OF DRILLER: Chris Gregory
6. DIRECTION OF HOLE: [X] VERTICAL [ ] INCLINED _____ DEG. FROM VERT.
7. THICKNESS OF OVERBURDEN: 0
8. DEPTH DRILLED INTO ROCK: 109.25
9. TOTAL DEPTH OF HOLE: 109.3
10. SIZE AND TYPE OF BIT: HQ-3
11. DATUM FOR ELEVATION SHOWN (TBM or MSL): MSL
12. MANUFACTURES'S DESIGNATION OF DRILL: CME 850
13. TOTAL NO. OF OVER-BURDEN SAMPLES TAKEN: DISTURBED: UNDISTURBED:
14. TOTAL NUMBER CORE BOXES: 11
15. ELEVATION GROUND WATER:
16. DATE HOLE: STARTED 15 July 04 COMPLETED 19 July 04
17. ELEVATION TOP OF HOLE: 1148.0
18. TOTAL CORE RECOVERY FOR BORING: 97 %
19. SIGNATURE OF INSPECTOR: Tom Danielson

ELEVATION a	DEPTH b	LEGEND c	CLASSIFICATION OF MATERIALS (Description) d	% CORE RECOVERY e	BOX OR SAMPLE NO. f	RQD g	FRACTURES h	REMARKS (Drilling time, water loss, depth weathering, etc., if significant) i
1118	30		Andesite pyroclastic, less large clasts but still coarse grained.	100%	Run 7 Box 4 29.3 34.3	97%	5 0 0	Start 1020 Stop 1045
1116	32							
1114	34							
				100%	Run 8 Box 4 34.3 39.3	96%	5 5 11	Start 1050 Stop 1120
1112	36							
1110	38							
				98%	Run 9 Box 5 39.3 44.3	73%	0 0 25 55	Start 1125 Stop
1108	40							
1106	42							

DRILLING LOG

DIVISION: Seattle District

INSTALLATION: Howard Hanson Dam

SHEET 4 OF 8 SHEETS

1. PROJECT: Site Exploration
2. LOCATION (Coordinates or Station): Howard Hanson Dam
3. DRILLING AGENCY: Gregory Drilling
4. HOLE NO. (As shown on drawing title and file number): 04-DD-252
5. NAME OF DRILLER: Chris Gregory
6. DIRECTION OF HOLE: [X] VERTICAL [ ] INCLINED _____ DEG. FROM VERT.
7. THICKNESS OF OVERBURDEN: 0
8. DEPTH DRILLED INTO ROCK: 109.25
9. TOTAL DEPTH OF HOLE: 109.3
10. SIZE AND TYPE OF BIT: HQ-3
11. DATUM FOR ELEVATION SHOWN (TBM or MSL): MSL
12. MANUFACTURES'S DESIGNATION OF DRILL: CME 850
13. TOTAL NO. OF OVER-BURDEN SAMPLES TAKEN: DISTURBED: UNDISTURBED:
14. TOTAL NUMBER CORE BOXES: 11
15. ELEVATION GROUND WATER:
16. DATE HOLE: STARTED 15 July 04 COMPLETED 19 July 04
17. ELEVATION TOP OF HOLE: 1148.0
18. TOTAL CORE RECOVERY FOR BORING: 97 %
19. SIGNATURE OF INSPECTOR: Tom Danielson

ELEVATION a	DEPTH b	LEGEND c	CLASSIFICATION OF MATERIALS (Description) d	% CORE RECOV-ERY e	BOX OR SAMPLE NO. f	RQD g	FRAC-TURES h	REMARKS (Drilling time, water loss, depth weathering, etc., if significant) i
							5	
1104	44						0	
							0	
			Aphanitic Andesite to Pyroclastic transition.	100%	Run 10 Box 5 44.3 49.3	74%		Start 1210 Stop 1230
			Aphanitic/Porphyritic Andesite.				45	
1102	46		Strongly fractured or brecciated Andesite clasts in a pyroclastic/breccia matrix from 45-47.5'.					
							20	
							50	
1100	48						0	
			Rubble zone.				50	
							50	
			Aphanitic to porphyritic clasts in a gouge matrix, strong chlorite alteration in matrix.	100%	Run 11 Box 6 49.3 52.1	32%		Start 1235 Stop 1250
1098	50						70	
							25	
1096	52		Breccia/rubble.					
			Broken and healed gouge - plastic. Falls apart in core box.	100%	Run 12 Box 6 52.1 54.3	54%	55	Start 1255 Stop 1310
							30	
1094	54						10	
				100%	Run 13 Box 6 54.3 59.3	80%		Start 1320 Stop 1340
							35	
							30	
			Pyroclastic Andesite.					
1092	56							

DRILLING LOG

DIVISION: Seattle District

INSTALLATION: Howard Hanson Dam

SHEET 5 OF 8 SHEETS

1. PROJECT: Site Exploration
2. LOCATION (Coordinates or Station): Howard Hanson Dam
3. DRILLING AGENCY: Gregory Drilling
4. HOLE NO. (As shown on drawing title and file number): 04-DD-252
5. NAME OF DRILLER: Chris Gregory
6. DIRECTION OF HOLE: [X] VERTICAL [ ] INCLINED _____ DEG. FROM VERT.
7. THICKNESS OF OVERBURDEN: 0
8. DEPTH DRILLED INTO ROCK: 109.25
9. TOTAL DEPTH OF HOLE: 109.3
10. SIZE AND TYPE OF BIT: HQ-3
11. DATUM FOR ELEVATION SHOWN (TBM or MSL): MSL
12. MANUFACTURES'S DESIGNATION OF DRILL: CME 850
13. TOTAL NO. OF OVER-BURDEN SAMPLES TAKEN: DISTURBED: UNDISTURBED:
14. TOTAL NUMBER CORE BOXES: 11
15. ELEVATION GROUND WATER:
16. DATE HOLE: STARTED 15 July 04 COMPLETED 19 July 04
17. ELEVATION TOP OF HOLE: 1148.0
18. TOTAL CORE RECOVERY FOR BORING: 97 %
19. SIGNATURE OF INSPECTOR: Tom Danielson

ELEVATION a	DEPTH b	LEGEND c	CLASSIFICATION OF MATERIALS (Description) d	% CORE RECOV-ERY e	BOX OR SAMPLE NO. f	RQD g	FRAC-TURES h	REMARKS (Drilling time, water loss, depth weathering, etc., if significant) i
1090	58						35	
				100%	Run 14 Box 7 59.3 64.3	66%	70 5 35 30 60 20 60 25 30	Start 1345 Stop 1420
1088	60		Andesite.					
1086	62		<1mm basalt veinlet along fracture.					
1084	64		Basalt					
			Andesite, strongly altered (chlorite pervasive, calcite stringers up to 1.5cm).	92%	Run 15 Box 7 64.3 69.0	77%	35 50 50 70	19 July 04 Start 0715 Stop 0745
1082	66							
1080	68							
			Rubble/blocked off. Increasing purple hue.	100%	Run 16 Box 7 69.0 71.8	100%		Start 0755 Stop 0815
1078	70							

DRILLING LOG

DIVISION: Seattle District

INSTALLATION: Howard Hanson Dam

SHEET 6 OF 8 SHEETS

1. PROJECT: Site Exploration
2. LOCATION (Coordinates or Station): Howard Hanson Dam
3. DRILLING AGENCY: Gregory Drilling
4. HOLE NO. (As shown on drawing title and file number): 04-DD-252
5. NAME OF DRILLER: Chris Gregory
6. DIRECTION OF HOLE: [X] VERTICAL [ ] INCLINED _____ DEG. FROM VERT.
7. THICKNESS OF OVERBURDEN: 0
8. DEPTH DRILLED INTO ROCK: 109.25
9. TOTAL DEPTH OF HOLE: 109.3
10. SIZE AND TYPE OF BIT: HQ-3
11. DATUM FOR ELEVATION SHOWN (TBM or MSL): MSL
12. MANUFACTURES'S DESIGNATION OF DRILL: CME 850
13. TOTAL NO. OF OVER-BURDEN SAMPLES TAKEN: DISTURBED: ; UNDISTURBED:
14. TOTAL NUMBER CORE BOXES: 11
15. ELEVATION GROUND WATER:
16. DATE HOLE: STARTED 15 July 04; COMPLETED 19 July 04
17. ELEVATION TOP OF HOLE: 1148.0
18. TOTAL CORE RECOVERY FOR BORING: 97 %
19. SIGNATURE OF INSPECTOR: Tom Danielson

ELEVATION a	DEPTH b	LEGEND c	CLASSIFICATION OF MATERIALS (Description) d	% CORE RECOV-ERY e	BOX OR SAMPLE NO. f	RQD g	FRAC-TURES h	REMARKS (Drilling time, water loss, depth weathering, etc., if significant) i
							25	
							30	
							10	
1076	72			100%	Run 17 Box 8 71.8 74.3	100%		Start 0820 Stop 0835
			Calcite/chlorite stringers to 1cm.				10	
							15	
1074	74							
			Andesite to Basaltic Andesite, strongly altered with chlorite replacement.	100%	Run 18 Box 8 74.3 78.9	75%	35	Start 0840 Stop 0900
							30	
							35	
							45	
1072	76						70	
							55	
1070	78						15	
							0	
							30	
			79-81.5' Structure lost due to extract.	?%	Run 19 Box 9 78.9 83.3			Start 0905 Stop 0925 Run stuck in core barrel. Beaten out @ 1025.
1068	80							
							60	
1066	82						30	
			Strongly Altered Andesite.	100%	Run 20 Box 9 83.3	90%	15	Start 0940 Stop 0958
1064	84							

DRILLING LOG

DIVISION: Seattle District

INSTALLATION: Howard Hanson Dam

SHEET 7 OF 8 SHEETS

1. PROJECT: Site Exploration
2. LOCATION (Coordinates or Station): Howard Hanson Dam
3. DRILLING AGENCY: Gregory Drilling
4. HOLE NO. (As shown on drawing title and file number): 04-DD-252
5. NAME OF DRILLER: Chris Gregory
6. DIRECTION OF HOLE: [X] VERTICAL [ ] INCLINED _____ DEG. FROM VERT.
7. THICKNESS OF OVERBURDEN: 0
8. DEPTH DRILLED INTO ROCK: 109.25
9. TOTAL DEPTH OF HOLE: 109.3
10. SIZE AND TYPE OF BIT: HQ-3
11. DATUM FOR ELEVATION SHOWN (TBM or MSL): MSL
12. MANUFACTURES'S DESIGNATION OF DRILL: CME 850
13. TOTAL NO. OF OVER-BURDEN SAMPLES TAKEN: DISTURBED: UNDISTURBED:
14. TOTAL NUMBER CORE BOXES: 11
15. ELEVATION GROUND WATER:
16. DATE HOLE: STARTED 15 July 04 COMPLETED 19 July 04
17. ELEVATION TOP OF HOLE: 1148.0
18. TOTAL CORE RECOVERY FOR BORING: 97 %
19. SIGNATURE OF INSPECTOR: Tom Danielson

ELEVATION a	DEPTH b	LEGEND c	CLASSIFICATION OF MATERIALS (Description) d	% CORE RECOV-ERY e	BOX OR SAMPLE NO. f	RQD g	FRAC-TURES h	REMARKS (Drilling time, water loss, depth weathering, etc., if significant) i
					84.3			
				100%	Run 21 Box 9 84.3 89.3	72%	45 5 20 25	Start 1045 Stop 1100
1062	86							
			Rock is becoming denser.				15	
1060	88						15 0 15	
							15 25	
				96%	Run 22 Box 10 89.3 94.3	72%	5	Start 1105 Stop 1130
1058	90							
							0 0 30 0 10 0 25	
1056	92		Calcite stringers up to 4mm at 70 degrees.					
1054	94						10	
			Andesite with apparent xenoliths or breccia fragments (alteration?).	100%	Run 23 Box 10 94.3 99.3	100%		Start 1140 Stop 1200
1052	96							
			Small amount of rubble around fracture.				30	
1050	98							

DRILLING LOG

DIVISION: Seattle District

INSTALLATION: Howard Hanson Dam

SHEET 8 OF 8 SHEETS

1. PROJECT: Site Exploration
2. LOCATION (Coordinates or Station): Howard Hanson Dam
3. DRILLING AGENCY: Gregory Drilling
4. HOLE NO. (As shown on drawing title and file number): 04-DD-252
5. NAME OF DRILLER: Chris Gregory
6. DIRECTION OF HOLE: [X] VERTICAL [ ] INCLINED _____ DEG. FROM VERT.
7. THICKNESS OF OVERBURDEN: 0
8. DEPTH DRILLED INTO ROCK: 109.25
9. TOTAL DEPTH OF HOLE: 109.3
10. SIZE AND TYPE OF BIT: HQ-3
11. DATUM FOR ELEVATION SHOWN (TBM or MSL): MSL
12. MANUFACTURES'S DESIGNATION OF DRILL: CME 850
13. TOTAL NO. OF OVER-BURDEN SAMPLES TAKEN: DISTURBED: UNDISTURBED:
14. TOTAL NUMBER CORE BOXES: 11
15. ELEVATION GROUND WATER:
16. DATE HOLE: STARTED 15 July 04 COMPLETED 19 July 04
17. ELEVATION TOP OF HOLE: 1148.0
18. TOTAL CORE RECOVERY FOR BORING: 97 %
19. SIGNATURE OF INSPECTOR: Tom Danielson

ELEVATION a	DEPTH b	LEGEND c	CLASSIFICATION OF MATERIALS (Description) d	% CORE RECOV-ERY e	BOX OR SAMPLE NO. f	RQD g	FRAC-TURES h	REMARKS (Drilling time, water loss, depth weathering, etc., if significant) i
1048	100		Andesite with breccia/xenolith clasts.	96%	Run 24 Box 11 99.3 104.3	100%	30	Start 1210 Stop 1230
1046	102							
1044	104			100%	Run 25 Box 11 104.3 109.3	96%	35	Start 1240 Stop 1305
1042	106		Abundant calcite stringers (<=3mm).				20 35	
			Decreasing breccia fragments.					
1040	108						35 55 0	
			6mm calcite vein with wall rock fragments.					
			Bottom of Hole at 109.25' bgs.					

DRILLING LOG

DIVISION: Seattle District

INSTALLATION: Howard Hanson Dam

SHEET 1 OF 11 SHEETS

1. PROJECT: Site Exploration
2. LOCATION (Coordinates or Station): Howard Hanson Dam
3. DRILLING AGENCY: Gregory Drilling
4. HOLE NO. (As shown on drawing title and file number): 04-DD-253
5. NAME OF DRILLER: Chris Gregory
6. DIRECTION OF HOLE: [X] VERTICAL [ ] INCLINED _____ DEG. FROM VERT.
7. THICKNESS OF OVERBURDEN: 0
8. DEPTH DRILLED INTO ROCK: 153
9. TOTAL DEPTH OF HOLE: 153.0
10. SIZE AND TYPE OF BIT: HQ-3
11. DATUM FOR ELEVATION SHOWN (TBM or MSL): MSL
12. MANUFACTURES'S DESIGNATION OF DRILL: CME 850
13. TOTAL NO. OF OVER-BURDEN SAMPLES TAKEN: DISTURBED: ; UNDISTURBED:
14. TOTAL NUMBER CORE BOXES: 16
15. ELEVATION GROUND WATER:
16. DATE HOLE: STARTED 12 August 04; COMPLETED 17 August 04
17. ELEVATION TOP OF HOLE: 1150.0
18. TOTAL CORE RECOVERY FOR BORING: 99 %
19. SIGNATURE OF INSPECTOR: Tom Danielson

ELEVATION a	DEPTH b	LEGEND c	CLASSIFICATION OF MATERIALS (Description) d	% CORE RECOV-ERY e	BOX OR SAMPLE NO. f	RQD g	FRAC-TURES h	REMARKS (Drilling time, water loss, depth weathering, etc., if significant) i
1148	2		Andesite Porphyry Blast induced fracturing.	100%	Run 1 Box 1 1.0 3.3	0%		Start 12 August 2004 Start: Stop: 1440
1146	4		Core Loss Blast induced fracturing.	67%	Run 2 Box 1 3.3 5.4	0%		
1144	6			100%	Run 3 Box 1 5.4 10.4	82%	60 70 40 5	Start: 1500 Stop:
1142	8						50 60 60	
1140	10		Slightly Less competant (Pyroclastic?)				30	
1138	12		Intact Run	94%	Run 4 Box 2 10.4 15.4	100%		Start: 1530 Stop: 1555
1136	14							

DRILLING LOG

DIVISION: Seattle District

INSTALLATION: Howard Hanson Dam

SHEET 2 OF 11 SHEETS

1. PROJECT: Site Exploration
2. LOCATION (Coordinates or Station): Howard Hanson Dam
3. DRILLING AGENCY: Gregory Drilling
4. HOLE NO. (As shown on drawing title and file number): 04-DD-253
5. NAME OF DRILLER: Chris Gregory
6. DIRECTION OF HOLE: [X] VERTICAL [ ] INCLINED _____ DEG. FROM VERT.
7. THICKNESS OF OVERBURDEN: 0
8. DEPTH DRILLED INTO ROCK: 153
9. TOTAL DEPTH OF HOLE: 153.0
10. SIZE AND TYPE OF BIT: HQ-3
11. DATUM FOR ELEVATION SHOWN (TBM or MSL): MSL
12. MANUFACTURES'S DESIGNATION OF DRILL: CME 850
13. TOTAL NO. OF OVER-BURDEN SAMPLES TAKEN: DISTURBED / UNDISTURBED
14. TOTAL NUMBER CORE BOXES: 16
15. ELEVATION GROUND WATER:
16. DATE HOLE: STARTED 12 August 04 / COMPLETED 17 August 04
17. ELEVATION TOP OF HOLE: 1150.0
18. TOTAL CORE RECOVERY FOR BORING: 99 %
19. SIGNATURE OF INSPECTOR: Tom Danielson

ELEVATION a	DEPTH b	LEGEND c	CLASSIFICATION OF MATERIALS (Description) d	% CORE RECOV-ERY e	BOX OR SAMPLE NO. f	RQD g	FRAC-TURES h	REMARKS (Drilling time, water loss, depth weathering, etc., if significant) i
1134	16		Rubble (perhaps mechanical). Pyroclastic: Fine ash with rare lithic fragments to 0cm.	100%	Run 5 Box 2 15.4 20.4	96%		Start: 1612 Stop: 1643
1132	18							
1130	20							
1128	22			100%	Run 6 Box 3 20.4 25.4	100%	15 20	Start: 1650 Stop: 1730
1126	24							
1124	26		Andesite Porphyry	100%	Run 7 Box 3 25.4 30.4	98%		13 August 2005 Start: Stop: 0740
1122	28							

DRILLING LOG

DIVISION: Seattle District

INSTALLATION: Howard Hanson Dam

SHEET 3 OF 11 SHEETS

1. PROJECT: Site Exploration
2. LOCATION (Coordinates or Station): Howard Hanson Dam
3. DRILLING AGENCY: Gregory Drilling
4. HOLE NO. (As shown on drawing title and file number): 04-DD-253
5. NAME OF DRILLER: Chris Gregory
6. DIRECTION OF HOLE: [X] VERTICAL [ ] INCLINED _____ DEG. FROM VERT.
7. THICKNESS OF OVERBURDEN: 0
8. DEPTH DRILLED INTO ROCK: 153
9. TOTAL DEPTH OF HOLE: 153.0
10. SIZE AND TYPE OF BIT: HQ-3
11. DATUM FOR ELEVATION SHOWN (TBM or MSL): MSL
12. MANUFACTURES'S DESIGNATION OF DRILL: CME 850
13. TOTAL NO. OF OVER-BURDEN SAMPLES TAKEN: DISTURBED _____ UNDISTURBED _____
14. TOTAL NUMBER CORE BOXES: 16
15. ELEVATION GROUND WATER: _____
16. DATE HOLE: STARTED 12 August 04 COMPLETED 17 August 04
17. ELEVATION TOP OF HOLE: 1150.0
18. TOTAL CORE RECOVERY FOR BORING: 99 %
19. SIGNATURE OF INSPECTOR: Tom Danielson

ELEVATION a	DEPTH b	LEGEND c	CLASSIFICATION OF MATERIALS (Description) d	% CORE RECOV-ERY e	BOX OR SAMPLE NO. f	RQD g	FRAC-TURES h	REMARKS (Drilling time, water loss, depth weathering, etc., if significant) i
1120	30						35 30 25	Losing Circulation
				100%	Run 8 Box 4 30.4 35.4	92%	5 15 40 15	Start: 0810 Stop: 0840
1118	32		Andesite Porphyry with breccia fragments (and autoclastic texture).					
1116	34						20 25	
1114	36		Andesite autoclastic.	100%	Run 9 Box 4 35.4 40.4	66%	15 30 30 30 30	Start: 0845 Stop: 0912
1112	38						30 30 30 20	
1110	40						20 10	
			Autoclastic andesite, strongly altered (Ca, Ch, Py), Pyrite is disseminated with local blebs @ 41.7' and 42.9'.	100%	Run 10 Box 5 40.4 45.4	100%		Start: 1010 Stop: 1040
1108	42						15	

DRILLING LOG

DIVISION: Seattle District

INSTALLATION: Howard Hanson Dam

SHEET 4 OF 11 SHEETS

1. PROJECT: Site Exploration
2. LOCATION (Coordinates or Station): Howard Hanson Dam
3. DRILLING AGENCY: Gregory Drilling
4. HOLE NO. (As shown on drawing title and file number): 04-DD-253
5. NAME OF DRILLER: Chris Gregory
6. DIRECTION OF HOLE: [X] VERTICAL [ ] INCLINED _____ DEG. FROM VERT.
7. THICKNESS OF OVERBURDEN: 0
8. DEPTH DRILLED INTO ROCK: 153
9. TOTAL DEPTH OF HOLE: 153.0
10. SIZE AND TYPE OF BIT: HQ-3
11. DATUM FOR ELEVATION SHOWN (TBM or MSL): MSL
12. MANUFACTURES'S DESIGNATION OF DRILL: CME 850
13. TOTAL NO. OF OVER-BURDEN SAMPLES TAKEN: DISTURBED / UNDISTURBED
14. TOTAL NUMBER CORE BOXES: 16
15. ELEVATION GROUND WATER:
16. DATE HOLE: STARTED 12 August 04 / COMPLETED 17 August 04
17. ELEVATION TOP OF HOLE: 1150.0
18. TOTAL CORE RECOVERY FOR BORING: 99 %
19. SIGNATURE OF INSPECTOR: Tom Danielson

ELEVATION a	DEPTH b	LEGEND c	CLASSIFICATION OF MATERIALS (Description) d	% CORE RECOV-ERY e	BOX OR SAMPLE NO. f	RQD g	FRAC-TURES h	REMARKS (Drilling time, water loss, depth weathering, etc., if significant) i
			Calcite stringer to 13cm long by 1cm wide, Quartz crystals locally.`				20	
1106	44						25	
							40	
			Becoming less competant (pyroclastic).	100%	Run 11 Box 5 45.4 50.4	100%		Start: 1058 Stop: 1122
1104	46		Calcite stringer.					
1102	48						35	
1100	50			100%	Run 12 Box 6 50.4 55.4	60%	60	Start: 1150 Stop: 1214
1098	52						45	
			Andesite Porphyry.					
1096	54		Picks up purple hue.				75	
							30	Return turned reddish.
			Gritty material, doesn't appear to be drilling related (~1cm).	100%	Run 13 Box 6	79%	50 30 50	Start: Stop: 1255
1094	56							

DRILLING LOG

DIVISION: Seattle District

INSTALLATION: Howard Hanson Dam

SHEET 5 OF 11 SHEETS

1. PROJECT: Site Exploration
2. LOCATION (Coordinates or Station): Howard Hanson Dam
3. DRILLING AGENCY: Gregory Drilling
4. HOLE NO. (As shown on drawing title and file number): 04-DD-253
5. NAME OF DRILLER: Chris Gregory
6. DIRECTION OF HOLE: [X] VERTICAL [ ] INCLINED _____ DEG. FROM VERT.
7. THICKNESS OF OVERBURDEN: 0
8. DEPTH DRILLED INTO ROCK: 153
9. TOTAL DEPTH OF HOLE: 153.0
10. SIZE AND TYPE OF BIT: HQ-3
11. DATUM FOR ELEVATION SHOWN (TBM or MSL): MSL
12. MANUFACTURES'S DESIGNATION OF DRILL: CME 850
13. TOTAL NO. OF OVER-BURDEN SAMPLES TAKEN: DISTURBED / UNDISTURBED
14. TOTAL NUMBER CORE BOXES: 16
15. ELEVATION GROUND WATER:
16. DATE HOLE: STARTED 12 August 04 / COMPLETED 17 August 04
17. ELEVATION TOP OF HOLE: 1150.0
18. TOTAL CORE RECOVERY FOR BORING: 99 %
19. SIGNATURE OF INSPECTOR: Tom Danielson

ELEVATION a	DEPTH b	LEGEND c	CLASSIFICATION OF MATERIALS (Description) d	% CORE RECOV-ERY e	BOX OR SAMPLE NO. f	RQD g	FRAC-TURES h	REMARKS (Drilling time, water loss, depth weathering, etc., if significant) i
					55.4 60.4		45	
1092	58						45 45	
							60	
1090	60		Loses Red/Purple Tint.					
				96%	Run 14 Box 7 60.4 65.4		60 60	Start: 1300 Stop:
1088	62		Calcite vein to 2cm.					
			Andesite Porphyry transitioning to Pyroclastic.					
1086	64							
				100%	Run 15 Box 7 65.4 70.4			Start: Stop: 1408
1084	66		Andesite Porphyry.					
							20	
1082	68						80	
1080	70							

DRILLING LOG

DIVISION: Seattle District

INSTALLATION: Howard Hanson Dam

SHEET 6 OF 11 SHEETS

1. PROJECT: Site Exploration
2. LOCATION (Coordinates or Station): Howard Hanson Dam
3. DRILLING AGENCY: Gregory Drilling
4. HOLE NO. (As shown on drawing title and file number): 04-DD-253
5. NAME OF DRILLER: Chris Gregory
6. DIRECTION OF HOLE: [X] VERTICAL [ ] INCLINED _____ DEG. FROM VERT.
7. THICKNESS OF OVERBURDEN: 0
8. DEPTH DRILLED INTO ROCK: 153
9. TOTAL DEPTH OF HOLE: 153.0
10. SIZE AND TYPE OF BIT: HQ-3
11. DATUM FOR ELEVATION SHOWN (TBM or MSL): MSL
12. MANUFACTURES'S DESIGNATION OF DRILL: CME 850
13. TOTAL NO. OF OVER-BURDEN SAMPLES TAKEN: DISTURBED: ; UNDISTURBED:
14. TOTAL NUMBER CORE BOXES: 16
15. ELEVATION GROUND WATER:
16. DATE HOLE: STARTED 12 August 04; COMPLETED 17 August 04
17. ELEVATION TOP OF HOLE: 1150.0
18. TOTAL CORE RECOVERY FOR BORING: 99 %
19. SIGNATURE OF INSPECTOR: Tom Danielson

ELEVATION a	DEPTH b	LEGEND c	CLASSIFICATION OF MATERIALS (Description) d	% CORE RECOV-ERY e	BOX OR SAMPLE NO. f	RQD g	FRAC-TURES h	REMARKS (Drilling time, water loss, depth weathering, etc., if significant) i
							50	
			Andesite Porphyry with a purple hue.	100%	Run 16 Box 8 70.4 75.4	54%	40 40	Start: 1412 Stop: 1448
1078	72						30 35 45 50 70	
1076	74						65 40	
1074	76			100%	Run 17 Box 8 75.4 80.4	100%		Start: 1452 Stop: 1512
1072	78							
1070	80						30	
				94%	Run 18 Box 9 80.4 85.4	94%		16 August 2004 Start: 0840 Stop: 0910
1068	82						50	
1066	84		Core Loss and rubble 83.5-84.7'. Rubble includescalcite fragments to				60	

DRILLING LOG

DIVISION: Seattle District

INSTALLATION: Howard Hanson Dam

SHEET 7 OF 11 SHEETS

1. PROJECT: Site Exploration
2. LOCATION (Coordinates or Station): Howard Hanson Dam
3. DRILLING AGENCY: Gregory Drilling
4. HOLE NO. (As shown on drawing title and file number): 04-DD-253
5. NAME OF DRILLER: Chris Gregory
6. DIRECTION OF HOLE: [X] VERTICAL [ ] INCLINED _____ DEG. FROM VERT.
7. THICKNESS OF OVERBURDEN: 0
8. DEPTH DRILLED INTO ROCK: 153
9. TOTAL DEPTH OF HOLE: 153.0
10. SIZE AND TYPE OF BIT: HQ-3
11. DATUM FOR ELEVATION SHOWN (TBM or MSL): MSL
12. MANUFACTURES'S DESIGNATION OF DRILL: CME 850
13. TOTAL NO. OF OVER-BURDEN SAMPLES TAKEN: DISTURBED _____ UNDISTURBED _____
14. TOTAL NUMBER CORE BOXES: 16
15. ELEVATION GROUND WATER: _____
16. DATE HOLE: STARTED 12 August 04 COMPLETED 17 August 04
17. ELEVATION TOP OF HOLE: 1150.0
18. TOTAL CORE RECOVERY FOR BORING: 99 %
19. SIGNATURE OF INSPECTOR: Tom Danielson

ELEVATION a	DEPTH b	LEGEND c	CLASSIFICATION OF MATERIALS (Description) d	% CORE RECOV-ERY e	BOX OR SAMPLE NO. f	RQD g	FRAC-TURES h	REMARKS (Drilling time, water loss, depth weathering, etc., if significant) i
			1cm.				45	
1064	86		Autoclastic Andesite Porphyry.	100%	Run 19 Box 9 85.4 90.4	100%		Start: Stop: 0945 Complete run.
1062	88							
1060	90		Maintaining red/purple hue and simi-brecciated appearance.					
				100%	Run 20 Box 10 90.4 95.4	100%		Start: 0950 Stop: 1015 Complete run.
1058	92							
1056	94							
1054	96			100%	Run 21 Box 10 95.4 100.4	100%	30	Start: 1040 Stop: 1115
			Loses red/purple tint at 98'.					
1052	98							

DRILLING LOG

DIVISION: Seattle District

INSTALLATION: Howard Hanson Dam

SHEET 8 OF 11 SHEETS

1. PROJECT: Site Exploration
2. LOCATION (Coordinates or Station): Howard Hanson Dam
3. DRILLING AGENCY: Gregory Drilling
4. HOLE NO. (As shown on drawing title and file number): 04-DD-253
5. NAME OF DRILLER: Chris Gregory
6. DIRECTION OF HOLE: [X] VERTICAL [ ] INCLINED _____ DEG. FROM VERT.
7. THICKNESS OF OVERBURDEN: 0
8. DEPTH DRILLED INTO ROCK: 153
9. TOTAL DEPTH OF HOLE: 153.0
10. SIZE AND TYPE OF BIT: HQ-3
11. DATUM FOR ELEVATION SHOWN (TBM or MSL): MSL
12. MANUFACTURES'S DESIGNATION OF DRILL: CME 850
13. TOTAL NO. OF OVER-BURDEN SAMPLES TAKEN: DISTURBED / UNDISTURBED
14. TOTAL NUMBER CORE BOXES: 16
15. ELEVATION GROUND WATER
16. DATE HOLE: STARTED 12 August 04 / COMPLETED 17 August 04
17. ELEVATION TOP OF HOLE: 1150.0
18. TOTAL CORE RECOVERY FOR BORING: 99 %
19. SIGNATURE OF INSPECTOR: Tom Danielson

ELEVATION a	DEPTH b	LEGEND c	CLASSIFICATION OF MATERIALS (Description) d	% CORE RECOV-ERY e	BOX OR SAMPLE NO. f	RQD g	FRAC-TURES h	REMARKS (Drilling time, water loss, depth weathering, etc., if significant) i
1050	100		Appears less brecciated at 98.5', same competancy, fine-grained.					
			Green, autoclastic or brecciated Andesite.	100%	Run 22 Box 11 100.4 105.4	100%	5	Start: 1123 Stop: 1148
1048	102							
							45	
1046	104						20	
				100%	Run 23 Bpx 11 105.4 110.4	100%		Start: 1158 Stop: 1221 Complete run.
1044	106							
1042	108							
1040	110							
				100%	Run 24 Box 12 110.4 115.4	100%		Start: 1337 Stop 1401
1038	112							

DRILLING LOG

DIVISION: Seattle District

INSTALLATION: Howard Hanson Dam

SHEET 9 OF 11 SHEETS

1. PROJECT: Site Exploration
2. LOCATION (Coordinates or Station): Howard Hanson Dam
3. DRILLING AGENCY: Gregory Drilling
4. HOLE NO. (As shown on drawing title and file number): 04-DD-253
5. NAME OF DRILLER: Chris Gregory
6. DIRECTION OF HOLE: [X] VERTICAL [ ] INCLINED _____ DEG. FROM VERT.
7. THICKNESS OF OVERBURDEN: 0
8. DEPTH DRILLED INTO ROCK: 153
9. TOTAL DEPTH OF HOLE: 153.0
10. SIZE AND TYPE OF BIT: HQ-3
11. DATUM FOR ELEVATION SHOWN (TBM or MSL): MSL
12. MANUFACTURES'S DESIGNATION OF DRILL: CME 850
13. TOTAL NO. OF OVER-BURDEN SAMPLES TAKEN: DISTURBED: UNDISTURBED:
14. TOTAL NUMBER CORE BOXES: 16
15. ELEVATION GROUND WATER:
16. DATE HOLE: STARTED 12 August 04 COMPLETED 17 August 04
17. ELEVATION TOP OF HOLE: 1150.0
18. TOTAL CORE RECOVERY FOR BORING: 99 %
19. SIGNATURE OF INSPECTOR: Tom Danielson

ELEVATION a	DEPTH b	LEGEND c	CLASSIFICATION OF MATERIALS (Description) d	% CORE RECOV-ERY e	BOX OR SAMPLE NO. f	RQD g	FRAC-TURES h	REMARKS (Drilling time, water loss, depth weathering, etc., if significant) i
1036	114						20	
1034	116		Same material as previous but developing a hylioclastic texture; slightly harder.	100%	Run 25 Box 12 115.4 120.4	100%	0	Start: 1410 Stop: 1431
1032	118							
1030	120							
1028	122			100%	Run 26 Box 13 120.4 125.4	100%		Start: 1445 Stop: 1507 Complete run.
1026	124							
1024	126			100%	Run 27 Box 13	88%		Start: Stop: 1544

DRILLING LOG

DIVISION: Seattle District

INSTALLATION: Howard Hanson Dam

SHEET 10 OF 11 SHEETS

1. PROJECT: Site Exploration
2. LOCATION (Coordinates or Station): Howard Hanson Dam
3. DRILLING AGENCY: Gregory Drilling
4. HOLE NO. (As shown on drawing title and file number): 04-DD-253
5. NAME OF DRILLER: Chris Gregory
6. DIRECTION OF HOLE: [X] VERTICAL [ ] INCLINED _____ DEG. FROM VERT.
7. THICKNESS OF OVERBURDEN: 0
8. DEPTH DRILLED INTO ROCK: 153
9. TOTAL DEPTH OF HOLE: 153.0
10. SIZE AND TYPE OF BIT: HQ-3
11. DATUM FOR ELEVATION SHOWN (TBM or MSL): MSL
12. MANUFACTURES'S DESIGNATION OF DRILL: CME 850
13. TOTAL NO. OF OVER-BURDEN SAMPLES TAKEN: DISTURBED / UNDISTURBED
14. TOTAL NUMBER CORE BOXES: 16
15. ELEVATION GROUND WATER:
16. DATE HOLE: STARTED 12 August 04 / COMPLETED 17 August 04
17. ELEVATION TOP OF HOLE: 1150.0
18. TOTAL CORE RECOVERY FOR BORING: 99 %
19. SIGNATURE OF INSPECTOR: Tom Danielson

ELEVATION a	DEPTH b	LEGEND c	CLASSIFICATION OF MATERIALS (Description) d	% CORE RECOV-ERY e	BOX OR SAMPLE NO. f	RQD g	FRAC-TURES h	REMARKS (Drilling time, water loss, depth weathering, etc., if significant) i
					125.4 130.4		15	
							35	
							50	
1022	128		Iron discoloration to 5cm.				20	
			Extensive mechanical fracturing 129-130.4'.					
1020	130							
				100%	Run 28 Box 14 130.4 135.4	100%		Start: 1555 Stop:
1018	132							
							20	
1016	134							
			Andesite Flows, light green, moderately hard.	100%	Run 29 Box 14 135.4 140.4	92%		17 August 2004 Start: Stop 0705
1014	136							
							45	
1012	138						25	
							15	
1010	140							

DRILLING LOG

DIVISION: Seattle District

INSTALLATION: Howard Hanson Dam

SHEET 11 OF 11 SHEETS

1. PROJECT: Site Exploration
2. LOCATION (Coordinates or Station): Howard Hanson Dam
3. DRILLING AGENCY: Gregory Drilling
4. HOLE NO. (As shown on drawing title and file number): 04-DD-253
5. NAME OF DRILLER: Chris Gregory
6. DIRECTION OF HOLE: [X] VERTICAL [ ] INCLINED _____ DEG. FROM VERT.
7. THICKNESS OF OVERBURDEN: 0
8. DEPTH DRILLED INTO ROCK: 153
9. TOTAL DEPTH OF HOLE: 153.0
10. SIZE AND TYPE OF BIT: HQ-3
11. DATUM FOR ELEVATION SHOWN (TBM or MSL): MSL
12. MANUFACTURES'S DESIGNATION OF DRILL: CME 850
13. TOTAL NO. OF OVER-BURDEN SAMPLES TAKEN: DISTURBED / UNDISTURBED
14. TOTAL NUMBER CORE BOXES: 16
15. ELEVATION GROUND WATER
16. DATE HOLE: STARTED 12 August 04 / COMPLETED 17 August 04
17. ELEVATION TOP OF HOLE: 1150.0
18. TOTAL CORE RECOVERY FOR BORING: 99 %
19. SIGNATURE OF INSPECTOR: Tom Danielson

ELEVATION a	DEPTH b	LEGEND c	CLASSIFICATION OF MATERIALS (Description) d	% CORE RECOV-ERY e	BOX OR SAMPLE NO. f	RQD g	FRAC-TURES h	REMARKS (Drilling time, water loss, depth weathering, etc., if significant) i
				98%	Run 30 Box 15 140.4 145.4	68%	30 30 45 50 5 60 5	Start: 0712 Stop 0740
1008	142							
1006	144		Gray Andesite flows/porphyrys.					
				100%	Run 31 Box 15 145.4 150.4	53%	5 5 40 45 10 15 30 70 35 15	Start: 0750 Stop: 0815
1004	146							
1002	148							
1000	150							
				100%	Run 32 Box 16 150.4 153.0	88%	15 60 20	Start: Stop 0840
998	152							
			Bottom of Hole at 153' bgs.					

DRILLING LOG

DIVISION: Seattle District

INSTALLATION: Howard Hanson Dam

SHEET 1 OF 11 SHEETS

1. PROJECT: Site Exploration
2. LOCATION (Coordinates or Station): Howard Hanson Dam
3. DRILLING AGENCY: Gregory Drilling
4. HOLE NO. (As shown on drawing title and file number): 04-DD-254
5. NAME OF DRILLER: Chris Gregory
6. DIRECTION OF HOLE: [X] VERTICAL [ ] INCLINED _____ DEG. FROM VERT.
7. THICKNESS OF OVERBURDEN: 0
8. DEPTH DRILLED INTO ROCK: 153
9. TOTAL DEPTH OF HOLE: 153.0
10. SIZE AND TYPE OF BIT: HQ-3
11. DATUM FOR ELEVATION SHOWN (TBM or MSL): MSL
12. MANUFACTURES'S DESIGNATION OF DRILL: CME 850
13. TOTAL NO. OF OVER-BURDEN SAMPLES TAKEN: DISTURBED _____ UNDISTURBED _____
14. TOTAL NUMBER CORE BOXES: 16
15. ELEVATION GROUND WATER: _____
16. DATE HOLE: STARTED 27 July 04 COMPLETED 28 July 04
17. ELEVATION TOP OF HOLE: 1149.0
18. TOTAL CORE RECOVERY FOR BORING: 98 %
19. SIGNATURE OF INSPECTOR: Tom Danielson

ELEVATION a	DEPTH b	LEGEND c	CLASSIFICATION OF MATERIALS (Description) d	% CORE RECOV-ERY e	BOX OR SAMPLE NO. f	RQD g	FRAC-TURES h	REMARKS (Drilling time, water loss, depth weathering, etc., if significant) i
			Core Loss.	92%	Run 1 Box 1 0.0 5.0	40%		Start 0830 Stop 0855
1148			Pyroclastic. Rubble and fractures are primarily blast induced.				70	
	2						0	
							5	
1146							0	
							0	
							0	
	4						35	
							15	
1144								
			Pyroclastic; strongly altered: Ch, Ca; disseminated.	96%	Run 2 Box 1 5.0 10.0	90%		Start 0905 Stop 0930
	6						5	
			Core loss or void at 6'.				20	
			Pyroclastic as above.					
1142								
	8							
1140							0	
							0	
	10							
			Andesite pyroclastic, becomes denser and stronger down section, also picks up much larger fragments (to 10cm).	100%	Run 3 Box 2 10.0 15.0	96%		Start 0940 Stop 0957
1138								
	12						25	
1136								
	14							

DRILLING LOG

DIVISION: Seattle District

INSTALLATION: Howard Hanson Dam

SHEET 2 OF 11 SHEETS

1. PROJECT: Site Exploration
2. LOCATION (Coordinates or Station): Howard Hanson Dam
3. DRILLING AGENCY: Gregory Drilling
4. HOLE NO. (As shown on drawing title and file number): 04-DD-254
5. NAME OF DRILLER: Chris Gregory
6. DIRECTION OF HOLE: [X] VERTICAL [ ] INCLINED _____ DEG. FROM VERT.
7. THICKNESS OF OVERBURDEN: 0
8. DEPTH DRILLED INTO ROCK: 153
9. TOTAL DEPTH OF HOLE: 153.0
10. SIZE AND TYPE OF BIT: HQ-3
11. DATUM FOR ELEVATION SHOWN (TBM or MSL): MSL
12. MANUFACTURES'S DESIGNATION OF DRILL: CME 850
13. TOTAL NO. OF OVER-BURDEN SAMPLES TAKEN: DISTURBED _____ UNDISTURBED _____
14. TOTAL NUMBER CORE BOXES: 16
15. ELEVATION GROUND WATER: _____
16. DATE HOLE: STARTED 27 July 04 COMPLETED 28 July 04
17. ELEVATION TOP OF HOLE: 1149.0
18. TOTAL CORE RECOVERY FOR BORING: 98 %
19. SIGNATURE OF INSPECTOR: Tom Danielson

ELEVATION a	DEPTH b	LEGEND c	CLASSIFICATION OF MATERIALS (Description) d	% CORE RECOV-ERY e	BOX OR SAMPLE NO. f	RQD g	FRAC-TURES h	REMARKS (Drilling time, water loss, depth weathering, etc., if significant) i
1134							60	
							55	
				100%	Run 4 Box 2 15.0 20.0	92%	70	Start 1015 Stop 1030
							45	
	16							
							35	
1132								
	18						35	
1130							55	
	20			100%	Run 5 Box 3 20.0 25.0	100%		Start 1035 Stop 1055
1128							60	
			Andesite breccia.					
	22							
			Andesite.					
1126								
	24							
1124								
			Porphyritic Andesite, purple hue.	100%	Run 6 Box 3 25.0 30.0	100%	30	Start 1100 Stop 1120
	26						75	
1122							30	
	28						20	

DRILLING LOG

DIVISION: Seattle District

INSTALLATION: Howard Hanson Dam

SHEET 3 OF 11 SHEETS

1. PROJECT: Site Exploration
2. LOCATION (Coordinates or Station): Howard Hanson Dam
3. DRILLING AGENCY: Gregory Drilling
4. HOLE NO. (As shown on drawing title and file number): 04-DD-254
5. NAME OF DRILLER: Chris Gregory
6. DIRECTION OF HOLE: [X] VERTICAL [ ] INCLINED _____ DEG. FROM VERT.
7. THICKNESS OF OVERBURDEN: 0
8. DEPTH DRILLED INTO ROCK: 153
9. TOTAL DEPTH OF HOLE: 153.0
10. SIZE AND TYPE OF BIT: HQ-3
11. DATUM FOR ELEVATION SHOWN (TBM or MSL): MSL
12. MANUFACTURES'S DESIGNATION OF DRILL: CME 850
13. TOTAL NO. OF OVER-BURDEN SAMPLES TAKEN: DISTURBED: _____ UNDISTURBED: _____
14. TOTAL NUMBER CORE BOXES: 16
15. ELEVATION GROUND WATER: _____
16. DATE HOLE: STARTED 27 July 04 COMPLETED 28 July 04
17. ELEVATION TOP OF HOLE: 1149.0
18. TOTAL CORE RECOVERY FOR BORING: 98 %
19. SIGNATURE OF INSPECTOR: Tom Danielson

ELEVATION a	DEPTH b	LEGEND c	CLASSIFICATION OF MATERIALS (Description) d	% CORE RECOV-ERY e	BOX OR SAMPLE NO. f	RQD g	FRAC-TURES h	REMARKS (Drilling time, water loss, depth weathering, etc., if significant) i
1120							45	
	30						55	
				100%	Run 7 Box 4 30.0 35.0	64%	15	Start 1125 Stop 1145
1118			Purple Porphyriric Andesite.				45	
							55	
	32						60	
							15	
1116							10	
							30	
	34						5	
							75	
1114			Mechanically broken up. Rubble.				10	
				100%	Run 8 Box 4 35.0 40.0	86%	30	Start 1250 Stop 1255
	36						65	
1112								
	38							
							10	
1110			Picking up breccia clasts/xenoliths.					
	40							
				100%	Run 9 Box 5 40.0 45.0	85%		Start 1305 Stop 1320
1108							25	
							10	
	42						5	

DRILLING LOG

DIVISION: Seattle District

INSTALLATION: Howard Hanson Dam

SHEET 4 OF 11 SHEETS

1. PROJECT: Site Exploration
2. LOCATION (Coordinates or Station): Howard Hanson Dam
3. DRILLING AGENCY: Gregory Drilling
4. HOLE NO. (As shown on drawing title and file number): 04-DD-254
5. NAME OF DRILLER: Chris Gregory
6. DIRECTION OF HOLE: [X] VERTICAL [ ] INCLINED _____ DEG. FROM VERT.
7. THICKNESS OF OVERBURDEN: 0
8. DEPTH DRILLED INTO ROCK: 153
9. TOTAL DEPTH OF HOLE: 153.0
10. SIZE AND TYPE OF BIT: HQ-3
11. DATUM FOR ELEVATION SHOWN (TBM or MSL): MSL
12. MANUFACTURES'S DESIGNATION OF DRILL: CME 850
13. TOTAL NO. OF OVER-BURDEN SAMPLES TAKEN: DISTURBED / UNDISTURBED
14. TOTAL NUMBER CORE BOXES: 16
15. ELEVATION GROUND WATER:
16. DATE HOLE: STARTED 27 July 04 / COMPLETED 28 July 04
17. ELEVATION TOP OF HOLE: 1149.0
18. TOTAL CORE RECOVERY FOR BORING: 98 %
19. SIGNATURE OF INSPECTOR: Tom Danielson

ELEVATION a	DEPTH b	LEGEND c	CLASSIFICATION OF MATERIALS (Description) d	% CORE RECOV-ERY e	BOX OR SAMPLE NO. f	RQD g	FRAC-TURES h	REMARKS (Drilling time, water loss, depth weathering, etc., if significant) i
1106							30	
							50	
	44						50	
							35	
1104					Run 10 B0x 5 45.0 50.0			Start Stop 1345
	46							
1102								
	48							
1100			Calcite stringers/blebs.					
	50			100%	Run 11 Box 6 50.0 55.0	95%	0	Start 1350 Stop 1407
1098							80	
	52						0	
1096								
	54						30	
							5	
1094							25	
	56		Rubble.	100%	Run 12 Box 6 55.0 59.8	53%	25 5 15	Start 1415 Stop 1437

DRILLING LOG

DIVISION: Seattle District

INSTALLATION: Howard Hanson Dam

SHEET 5 OF 11 SHEETS

1. PROJECT: Site Exploration
2. LOCATION (Coordinates or Station): Howard Hanson Dam
3. DRILLING AGENCY: Gregory Drilling
4. HOLE NO. (As shown on drawing title and file number): 04-DD-254
5. NAME OF DRILLER: Chris Gregory
6. DIRECTION OF HOLE: [X] VERTICAL [ ] INCLINED _____ DEG. FROM VERT.
7. THICKNESS OF OVERBURDEN: 0
8. DEPTH DRILLED INTO ROCK: 153
9. TOTAL DEPTH OF HOLE: 153.0
10. SIZE AND TYPE OF BIT: HQ-3
11. DATUM FOR ELEVATION SHOWN (TBM or MSL): MSL
12. MANUFACTURES'S DESIGNATION OF DRILL: CME 850
13. TOTAL NO. OF OVER-BURDEN SAMPLES TAKEN: DISTURBED _____ UNDISTURBED _____
14. TOTAL NUMBER CORE BOXES: 16
15. ELEVATION GROUND WATER: _____
16. DATE HOLE: STARTED 27 July 04 COMPLETED 28 July 04
17. ELEVATION TOP OF HOLE: 1149.0
18. TOTAL CORE RECOVERY FOR BORING: 98 %
19. SIGNATURE OF INSPECTOR: Tom Danielson

ELEVATION a	DEPTH b	LEGEND c	CLASSIFICATION OF MATERIALS (Description) d	% CORE RECOV-ERY e	BOX OR SAMPLE NO. f	RQD g	FRAC-TURES h	REMARKS (Drilling time, water loss, depth weathering, etc., if significant) i
1092							30	
							50	
							30	
	58						30	
							45	
							60	
							30	
1090							30	
			Extensively fractured from 58.8-59.7'.				65	
	60		Same hard, brittle, purplish Andesite.	100%	Run 13 Box 7 59.8 65.0	59%	30	Start Stop 1510
							45	
1088							60	
							5	
	62						60	
							10	
			Highly fractured.				15	
1086							45	
	64							
			Very highly gractured from 64-65'; evidence of high angle fractures with <1mm Ch/Py.				45	
1084				100%	Run 14 Box 7 65.0 70.0	66%	70	Start 1545 Stop 1600
							45	
	66							
1082							70	
	68							
							60	
1080								
							55	
	70						5	

DRILLING LOG

DIVISION: Seattle District

INSTALLATION: Howard Hanson Dam

SHEET 6 OF 11 SHEETS

1. PROJECT: Site Exploration
2. LOCATION (Coordinates or Station): Howard Hanson Dam
3. DRILLING AGENCY: Gregory Drilling
4. HOLE NO. (As shown on drawing title and file number): 04-DD-254
5. NAME OF DRILLER: Chris Gregory
6. DIRECTION OF HOLE: [X] VERTICAL [ ] INCLINED _____ DEG. FROM VERT.
7. THICKNESS OF OVERBURDEN: 0
8. DEPTH DRILLED INTO ROCK: 153
9. TOTAL DEPTH OF HOLE: 153.0
10. SIZE AND TYPE OF BIT: HQ-3
11. DATUM FOR ELEVATION SHOWN (TBM or MSL): MSL
12. MANUFACTURES'S DESIGNATION OF DRILL: CME 850
13. TOTAL NO. OF OVER-BURDEN SAMPLES TAKEN: DISTURBED _____ UNDISTURBED _____
14. TOTAL NUMBER CORE BOXES: 16
15. ELEVATION GROUND WATER: _____
16. DATE HOLE: STARTED 27 July 04 COMPLETED 28 July 04
17. ELEVATION TOP OF HOLE: 1149.0
18. TOTAL CORE RECOVERY FOR BORING: 98 %
19. SIGNATURE OF INSPECTOR: Tom Danielson

ELEVATION a	DEPTH b	LEGEND c	CLASSIFICATION OF MATERIALS (Description) d	% CORE RECOV-ERY e	BOX OR SAMPLE NO. f	RQD g	FRAC-TURES h	REMARKS (Drilling time, water loss, depth weathering, etc., if significant) i
1078				100%	Run 15 Box 8 70.0 75.0	88%	70 60	Start 1615 Stop 1635
	72							
1076							25 45 20 5	
	74							
1074							55	
	76			100%	Run 16 Box 8 75.0 80.0	70%	60	28 July 05 Start 0645 Stop 0705
1072							45 60 60 5	
	78		Basalt/Basaltic Andesite; hard, dense, dark rock; alteration concentrated in fractures.				60 75	
1070							25	
	80						70	
1068				100%	Run 17 Box 9 80.0 85.0		15 80	Start 0710 Stop 0735
	82							
1066							15	
	84						40	

DRILLING LOG

DIVISION: Seattle District

INSTALLATION: Howard Hanson Dam

SHEET 7 OF 11 SHEETS

1. PROJECT: Site Exploration
2. LOCATION (Coordinates or Station): Howard Hanson Dam
3. DRILLING AGENCY: Gregory Drilling
4. HOLE NO. (As shown on drawing title and file number): 04-DD-254
5. NAME OF DRILLER: Chris Gregory
6. DIRECTION OF HOLE: [X] VERTICAL [ ] INCLINED _____ DEG. FROM VERT.
7. THICKNESS OF OVERBURDEN: 0
8. DEPTH DRILLED INTO ROCK: 153
9. TOTAL DEPTH OF HOLE: 153.0
10. SIZE AND TYPE OF BIT: HQ-3
11. DATUM FOR ELEVATION SHOWN (TBM or MSL): MSL
12. MANUFACTURES'S DESIGNATION OF DRILL: CME 850
13. TOTAL NO. OF OVER-BURDEN SAMPLES TAKEN: DISTURBED: UNDISTURBED:
14. TOTAL NUMBER CORE BOXES: 16
15. ELEVATION GROUND WATER:
16. DATE HOLE: STARTED 27 July 04 COMPLETED 28 July 04
17. ELEVATION TOP OF HOLE: 1149.0
18. TOTAL CORE RECOVERY FOR BORING: 98 %
19. SIGNATURE OF INSPECTOR: Tom Danielson

ELEVATION a	DEPTH b	LEGEND c	CLASSIFICATION OF MATERIALS (Description) d	% CORE RECOV-ERY e	BOX OR SAMPLE NO. f	RQD g	FRAC-TURES h	REMARKS (Drilling time, water loss, depth weathering, etc., if significant) i
							15	
1064								
			Pyroclastics (?); relatively soft, granular, disseminated alteration.	100%	Run 18 Box 9 85.0 90.0	96%	15	Start 0740 Stop 0800
	86						5	
							30	
							20	
1062								
							40	
	88							
1060			More competant.				25	
							30	
	90							
				100%	Run 19 Box 10 90.0 95.0	100%		Start 0810 Stop 0830
1058								
	92							
			Contact between hard, purple Andesite and softer, olive green pyroclastics.					
1056								
	94							
1054								
			Andesite.	100%	Run 20 Box 10 95.0 100.0	96%		Start 0835 Stop 0852
	96						30	
1052							40	
							15	
	98						30	

DRILLING LOG

DIVISION: Seattle District

INSTALLATION: Howard Hanson Dam

SHEET 8 OF 11 SHEETS

1. PROJECT: Site Exploration
2. LOCATION (Coordinates or Station): Howard Hanson Dam
3. DRILLING AGENCY: Gregory Drilling
4. HOLE NO. (As shown on drawing title and file number): 04-DD-254
5. NAME OF DRILLER: Chris Gregory
6. DIRECTION OF HOLE: [X] VERTICAL [ ] INCLINED _____ DEG. FROM VERT.
7. THICKNESS OF OVERBURDEN: 0
8. DEPTH DRILLED INTO ROCK: 153
9. TOTAL DEPTH OF HOLE: 153.0
10. SIZE AND TYPE OF BIT: HQ-3
11. DATUM FOR ELEVATION SHOWN (TBM or MSL): MSL
12. MANUFACTURES'S DESIGNATION OF DRILL: CME 850
13. TOTAL NO. OF OVER-BURDEN SAMPLES TAKEN: DISTURBED: ; UNDISTURBED:
14. TOTAL NUMBER CORE BOXES: 16
15. ELEVATION GROUND WATER:
16. DATE HOLE: STARTED 27 July 04; COMPLETED 28 July 04
17. ELEVATION TOP OF HOLE: 1149.0
18. TOTAL CORE RECOVERY FOR BORING: 98 %
19. SIGNATURE OF INSPECTOR: Tom Danielson

ELEVATION a	DEPTH b	LEGEND c	CLASSIFICATION OF MATERIALS (Description) d	% CORE RECOV-ERY e	BOX OR SAMPLE NO. f	RQD g	FRAC-TURES h	REMARKS (Drilling time, water loss, depth weathering, etc., if significant) i
1050							30	
	100			100%	Run 21 Box 11 100.0 105.0	100%		Start 0905 Stop 0922
1048								
	102		Brecciated appearance; clasts to 8cm.				35	
1046								
	104							
1044			Andesite Breccia.	100%	Run 22 Box 11 105.0 110.0	100%	60	Start 0930 Stop 0945
	106							
1042								
	108							
1040			Andesite Porphyry.				30	
	110			60%	Run 23 Box 12 110.0 115.0	42%		Start Stop 1020
1038			Calcite stringers/blebs.				0	
			Rubble.				70	
	112						35	

DRILLING LOG

DIVISION: Seattle District

INSTALLATION: Howard Hanson Dam

SHEET 9 OF 11 SHEETS

1. PROJECT: Site Exploration
2. LOCATION (Coordinates or Station): Howard Hanson Dam
3. DRILLING AGENCY: Gregory Drilling
4. HOLE NO. (As shown on drawing title and file number): 04-DD-254
5. NAME OF DRILLER: Chris Gregory
6. DIRECTION OF HOLE: [X] VERTICAL [ ] INCLINED _____ DEG. FROM VERT.
7. THICKNESS OF OVERBURDEN: 0
8. DEPTH DRILLED INTO ROCK: 153
9. TOTAL DEPTH OF HOLE: 153.0
10. SIZE AND TYPE OF BIT: HQ-3
11. DATUM FOR ELEVATION SHOWN (TBM or MSL): MSL
12. MANUFACTURES'S DESIGNATION OF DRILL: CME 850
13. TOTAL NO. OF OVER-BURDEN SAMPLES TAKEN: DISTURBED _____ UNDISTURBED _____
14. TOTAL NUMBER CORE BOXES: 16
15. ELEVATION GROUND WATER: _____
16. DATE HOLE: STARTED 27 July 04 COMPLETED 28 July 04
17. ELEVATION TOP OF HOLE: 1149.0
18. TOTAL CORE RECOVERY FOR BORING: 98 %
19. SIGNATURE OF INSPECTOR: Tom Danielson

ELEVATION a	DEPTH b	LEGEND c	CLASSIFICATION OF MATERIALS (Description) d	% CORE RECOV-ERY e	BOX OR SAMPLE NO. f	RQD g	FRAC-TURES h	REMARKS (Drilling time, water loss, depth weathering, etc., if significant) i
			Very highly fractured. Andesite Breccia with weaker matrix (R2).				30	
1036								
			Core Loss.					
	114							
1034								
			Andesite Breccia as above.	100%	Run 24 Box 12 115.0 120.0	98%	30	Start 1140 Stop
	116							
1032								
	118							
1030								
			Andesite Porphyry.				35	
	120			100%	Run 25 Box 13 120.0 125.0	100%	20	Start 1255 Stop 1315
1028								
	122							
			Picks up zenoliths/breccia fragments.					
1026								
	124						40	
1024								
				100%	Run 26 Box 13 125.0 130.0	96%	30	Start 1320 Stop 1340
	126							

DRILLING LOG

DIVISION: Seattle District

INSTALLATION: Howard Hanson Dam

SHEET 10 OF 11 SHEETS

1. PROJECT: Site Exploration
2. LOCATION (Coordinates or Station): Howard Hanson Dam
3. DRILLING AGENCY: Gregory Drilling
4. HOLE NO. (As shown on drawing title and file number): 04-DD-254
5. NAME OF DRILLER: Chris Gregory
6. DIRECTION OF HOLE: [X] VERTICAL [ ] INCLINED _____ DEG. FROM VERT.
7. THICKNESS OF OVERBURDEN: 0
8. DEPTH DRILLED INTO ROCK: 153
9. TOTAL DEPTH OF HOLE: 153.0
10. SIZE AND TYPE OF BIT: HQ-3
11. DATUM FOR ELEVATION SHOWN (TBM or MSL): MSL
12. MANUFACTURES'S DESIGNATION OF DRILL: CME 850
13. TOTAL NO. OF OVER-BURDEN SAMPLES TAKEN: DISTURBED / UNDISTURBED
14. TOTAL NUMBER CORE BOXES: 16
15. ELEVATION GROUND WATER:
16. DATE HOLE: STARTED 27 July 04 / COMPLETED 28 July 04
17. ELEVATION TOP OF HOLE: 1149.0
18. TOTAL CORE RECOVERY FOR BORING: 98 %
19. SIGNATURE OF INSPECTOR: Tom Danielson

ELEVATION a	DEPTH b	LEGEND c	CLASSIFICATION OF MATERIALS (Description) d	% CORE RECOV-ERY e	BOX OR SAMPLE NO. f	RQD g	FRAC-TURES h	REMARKS (Drilling time, water loss, depth weathering, etc., if significant) i
1022							25	
	128							
1020							50	
	130		Andesite Breccia.	100%	Run 27 Box 14 130.0 135.0	66%		Start Stop 1400
1018							10	
							0	
	132						0	
1016							10	
							10	
	134							
							10	
1014							35	
				100%	Run 28 Box 14 135.0 140.0	74%	45	Start 1410 Stop 1435
							0	
	136						30	
							5	
1012							10	
	138						20	
							30	
							35	
1010							30	
							30	
	140						15	

DRILLING LOG

DIVISION: Seattle District

INSTALLATION: Howard Hanson Dam

SHEET 11 OF 11 SHEETS

1. PROJECT: Site Exploration
2. LOCATION (Coordinates or Station): Howard Hanson Dam
3. DRILLING AGENCY: Gregory Drilling
4. HOLE NO. (As shown on drawing title and file number): 04-DD-254
5. NAME OF DRILLER: Chris Gregory
6. DIRECTION OF HOLE: [X] VERTICAL [ ] INCLINED _____ DEG. FROM VERT.
7. THICKNESS OF OVERBURDEN: 0
8. DEPTH DRILLED INTO ROCK: 153
9. TOTAL DEPTH OF HOLE: 153.0
10. SIZE AND TYPE OF BIT: HQ-3
11. DATUM FOR ELEVATION SHOWN (TBM or MSL): MSL
12. MANUFACTURES'S DESIGNATION OF DRILL: CME 850
13. TOTAL NO. OF OVER-BURDEN SAMPLES TAKEN: DISTURBED: ; UNDISTURBED:
14. TOTAL NUMBER CORE BOXES: 16
15. ELEVATION GROUND WATER:
16. DATE HOLE: STARTED 27 July 04; COMPLETED 28 July 04
17. ELEVATION TOP OF HOLE: 1149.0
18. TOTAL CORE RECOVERY FOR BORING: 98 %
19. SIGNATURE OF INSPECTOR: Tom Danielson

ELEVATION a	DEPTH b	LEGEND c	CLASSIFICATION OF MATERIALS (Description) d	% CORE RECOV-ERY e	BOX OR SAMPLE NO. f	RQD g	FRAC-TURES h	REMARKS (Drilling time, water loss, depth weathering, etc., if significant) i
1008				100%	Run 29 Box 15 140.0 141.6	100%		Start 1443 Stop 1455
	142		Silty residue - core loss, highly fractured.	94%	Run 30 Box 15 141.6 145.0	88%		Start 1510 Stop 1525
1006								
	144							
1004				100%	Run 31 Box 15 145.0 150.0			Start 1535 Stop 1550
	146		Andesite Porphyry, darker green to black; abundant thin calcium and iron oxide stringers.					
1002								
	148							
1000								
	150				Run 32 Box 16 150.0 153.0			Start 1610 Stop 1620
998								
	152							
996								
			Bottom of Hole at 153' bgs.					

DRILLING LOG

DIVISION: Seattle District

INSTALLATION: Howard Hanson Dam

SHEET 1 OF 9 SHEETS

1. PROJECT: Site Exploration
2. LOCATION (Coordinates or Station): Howard Hanson Dam
3. DRILLING AGENCY: Gregory Drilling
4. HOLE NO. (As shown on drawing title and file number): 04-DD-255
5. NAME OF DRILLER: Chris Gregory
6. DIRECTION OF HOLE: [X] VERTICAL [ ] INCLINED _____ DEG. FROM VERT.
7. THICKNESS OF OVERBURDEN: 0
8. DEPTH DRILLED INTO ROCK: 115.75
9. TOTAL DEPTH OF HOLE: 115.8
10. SIZE AND TYPE OF BIT: HQ-3
11. DATUM FOR ELEVATION SHOWN (TBM or MSL): MSL
12. MANUFACTURES'S DESIGNATION OF DRILL: CME 850
13. TOTAL NO. OF OVER-BURDEN SAMPLES TAKEN: DISTURBED _____ UNDISTURBED _____
14. TOTAL NUMBER CORE BOXES: 12
15. ELEVATION GROUND WATER: _____
16. DATE HOLE: STARTED 13 July 04 COMPLETED 15 July 04
17. ELEVATION TOP OF HOLE: 1148.0
18. TOTAL CORE RECOVERY FOR BORING: 98 %
19. SIGNATURE OF INSPECTOR: Tom Danielson

ELEVATION a	DEPTH b	LEGEND c	CLASSIFICATION OF MATERIALS (Description) d	% CORE RECOV-ERY e	BOX OR SAMPLE NO. f	RQD g	FRAC-TURES h	REMARKS (Drilling time, water loss, depth weathering, etc., if significant) i
			Pyroclastic; strongly altered, unweathered.	94%	Run 1 Box 1 0.0 4.3	92%	0 30	Start 1030 Stop 1125
1146	2						0	
1144	4							
			Pyroclastic; altered.	94%	Run 2 Box 1 4.3 9.3	90%	55 30	Start 1135 Stop 1210
1142	6							
							40	
1140	8						10	
			Pyroclastic, Altered.	99%	Run 3 Box 2 9.3 14.3	100%		Start 1215 Stop 1240
1138	10						60	
1136	12						35	
			Some psuedo breccia clasts.					
1134	14							

DRILLING LOG

DIVISION: Seattle District

INSTALLATION: Howard Hanson Dam

SHEET 2 OF 9 SHEETS

1. PROJECT: Site Exploration
2. LOCATION (Coordinates or Station): Howard Hanson Dam
3. DRILLING AGENCY: Gregory Drilling
4. HOLE NO. (As shown on drawing title and file number): 04-DD-255
5. NAME OF DRILLER: Chris Gregory
6. DIRECTION OF HOLE: [X] VERTICAL [ ] INCLINED _____ DEG. FROM VERT.
7. THICKNESS OF OVERBURDEN: 0
8. DEPTH DRILLED INTO ROCK: 115.75
9. TOTAL DEPTH OF HOLE: 115.8
10. SIZE AND TYPE OF BIT: HQ-3
11. DATUM FOR ELEVATION SHOWN (TBM or MSL): MSL
12. MANUFACTURES'S DESIGNATION OF DRILL: CME 850
13. TOTAL NO. OF OVER-BURDEN SAMPLES TAKEN: DISTURBED: UNDISTURBED:
14. TOTAL NUMBER CORE BOXES: 12
15. ELEVATION GROUND WATER:
16. DATE HOLE: STARTED 13 July 04 COMPLETED 15 July 04
17. ELEVATION TOP OF HOLE: 1148.0
18. TOTAL CORE RECOVERY FOR BORING: 98 %
19. SIGNATURE OF INSPECTOR: Tom Danielson

ELEVATION a	DEPTH b	LEGEND c	CLASSIFICATION OF MATERIALS (Description) d	% CORE RECOV-ERY e	BOX OR SAMPLE NO. f	RQD g	FRAC-TURES h	REMARKS (Drilling time, water loss, depth weathering, etc., if significant) i
			Pyroclastic, moderately altered.	100%	Run 4 Box 2 14.3 19.3	95%	25	Start 1245 Stop 1310
1132	16		Increasing breccia fragments to 4.0 Fragments up to 6cm.				0	
1130	18		Last 4" didn't fit in box - saved in bag.				15	
				100%	Run 5 Box 3 19.3 24.3	68%	0	Start 1315 Stop 1345
1128	20		Rubble zone.				0	
1126	22						20	
1124	24						30	
			Pyroclastic with breccia fragments.	96%	Run 6 Box 3 24.3 29.3	96%	45	Start 1420 Stop 1445
1122	26							
1120	28							

DRILLING LOG

DIVISION: Seattle District

INSTALLATION: Howard Hanson Dam

SHEET 3 OF 9 SHEETS

1. PROJECT: Site Exploration
2. LOCATION (Coordinates or Station): Howard Hanson Dam
3. DRILLING AGENCY: Gregory Drilling
4. HOLE NO. (As shown on drawing title and file number): 04-DD-255
5. NAME OF DRILLER: Chris Gregory
6. DIRECTION OF HOLE: [X] VERTICAL [ ] INCLINED _____ DEG. FROM VERT.
7. THICKNESS OF OVERBURDEN: 0
8. DEPTH DRILLED INTO ROCK: 115.75
9. TOTAL DEPTH OF HOLE: 115.8
10. SIZE AND TYPE OF BIT: HQ-3
11. DATUM FOR ELEVATION SHOWN (TBM or MSL): MSL
12. MANUFACTURES'S DESIGNATION OF DRILL: CME 850
13. TOTAL NO. OF OVER-BURDEN SAMPLES TAKEN: DISTURBED: UNDISTURBED:
14. TOTAL NUMBER CORE BOXES: 12
15. ELEVATION GROUND WATER:
16. DATE HOLE: STARTED 13 July 04 COMPLETED 15 July 04
17. ELEVATION TOP OF HOLE: 1148.0
18. TOTAL CORE RECOVERY FOR BORING: 98 %
19. SIGNATURE OF INSPECTOR: Tom Danielson

ELEVATION a	DEPTH b	LEGEND c	CLASSIFICATION OF MATERIALS (Description) d	% CORE RECOV-ERY e	BOX OR SAMPLE NO. f	RQD g	FRAC-TURES h	REMARKS (Drilling time, water loss, depth weathering, etc., if significant) i
1118	30		Pyroclastic breccia with clasts decreasing down section, becomes more porous down section/coarser matrix.	100%	Run 7 Box 4 29.3 34.3	97%	0 0	Start 1455 Stop 1515
1116	32							
1114	34							
			Pyroclastic	100%	Run 8 Box 4 34.3 39.3	100%		Start 1525 Stop 1550
1112	36							
1110	38							
			Pyroclastic with minimal breccia fragments.	100%	Run 9 Box 5 39.3 44.3	96%	0 0	14 July 04 Start 0635 Stop 0725
1108	40							
1106	42							

DRILLING LOG

DIVISION: Seattle District

INSTALLATION: Howard Hanson Dam

SHEET 4 OF 9 SHEETS

1. PROJECT: Site Exploration
2. LOCATION (Coordinates or Station): Howard Hanson Dam
3. DRILLING AGENCY: Gregory Drilling
4. HOLE NO. (As shown on drawing title and file number): 04-DD-255
5. NAME OF DRILLER: Chris Gregory
6. DIRECTION OF HOLE: [X] VERTICAL [ ] INCLINED _____ DEG. FROM VERT.
7. THICKNESS OF OVERBURDEN: 0
8. DEPTH DRILLED INTO ROCK: 115.75
9. TOTAL DEPTH OF HOLE: 115.8
10. SIZE AND TYPE OF BIT: HQ-3
11. DATUM FOR ELEVATION SHOWN (TBM or MSL): MSL
12. MANUFACTURES'S DESIGNATION OF DRILL: CME 850
13. TOTAL NO. OF OVER-BURDEN SAMPLES TAKEN: DISTURBED / UNDISTURBED
14. TOTAL NUMBER CORE BOXES: 12
15. ELEVATION GROUND WATER:
16. DATE HOLE: STARTED 13 July 04 / COMPLETED 15 July 04
17. ELEVATION TOP OF HOLE: 1148.0
18. TOTAL CORE RECOVERY FOR BORING: 98 %
19. SIGNATURE OF INSPECTOR: Tom Danielson

ELEVATION a	DEPTH b	LEGEND c	CLASSIFICATION OF MATERIALS (Description) d	% CORE RECOV-ERY e	BOX OR SAMPLE NO. f	RQD g	FRAC-TURES h	REMARKS (Drilling time, water loss, depth weathering, etc., if significant) i
			Annealed fracture.				0	
1104	44						30	
			Transition to harder Andesite; much more brittle.	100%	Run 10 Box 5 44.3 49.3	50%		Start 0735 Stop 0800
1102	46		Fracture pair is at ~70 degrees from eachother.				45 55	
			Brecciated zone; andesite fragments in a clayey matrix, clast supported.				55	
1100	48						20 0 30	
			Aphanitic Andesite.	93%	Run 11 Box 6 49.3 52.6	54%	20 25	Start 0815 Stop 0900
1098	50		Rubble zone.					
1096	52						15	
			Aphanitic Andesite Altered.	85%	Run 12 Box 6 52.6 54.3	0%	15 5 50	Start 0945 Stop 1005 Block off at 52.6'.
			Rubble zone.				40	
1094	54							
			Darker Andesite, mafic phenocrysts replaced.	92%	Run 13 Box 6 54.3 57.9	58%	5 20	Start 1015 Idle 1045-1105 Stop 1145
1092	56							

DRILLING LOG

DIVISION: Seattle District

INSTALLATION: Howard Hanson Dam

SHEET 5 OF 9 SHEETS

1. PROJECT: Site Exploration
2. LOCATION (Coordinates or Station): Howard Hanson Dam
3. DRILLING AGENCY: Gregory Drilling
4. HOLE NO. (As shown on drawing title and file number): 04-DD-255
5. NAME OF DRILLER: Chris Gregory
6. DIRECTION OF HOLE: [X] VERTICAL [ ] INCLINED _____ DEG. FROM VERT.
7. THICKNESS OF OVERBURDEN: 0
8. DEPTH DRILLED INTO ROCK: 115.75
9. TOTAL DEPTH OF HOLE: 115.8
10. SIZE AND TYPE OF BIT: HQ-3
11. DATUM FOR ELEVATION SHOWN (TBM or MSL): MSL
12. MANUFACTURES'S DESIGNATION OF DRILL: CME 850
13. TOTAL NO. OF OVER-BURDEN SAMPLES TAKEN: DISTURBED: UNDISTURBED:
14. TOTAL NUMBER CORE BOXES: 12
15. ELEVATION GROUND WATER:
16. DATE HOLE: STARTED 13 July 04 COMPLETED 15 July 04
17. ELEVATION TOP OF HOLE: 1148.0
18. TOTAL CORE RECOVERY FOR BORING: 98 %
19. SIGNATURE OF INSPECTOR: Tom Danielson

ELEVATION a	DEPTH b	LEGEND c	CLASSIFICATION OF MATERIALS (Description) d	% CORE RECOV-ERY e	BOX OR SAMPLE NO. f	RQD g	FRAC-TURES h	REMARKS (Drilling time, water loss, depth weathering, etc., if significant) i
							5 20 60	
1090	58		Andesite with calcite stringers, stringers dip ~40-50 degrees.	93%	Run 14 Box 6 57.9 59.3	93%	30 30	Start 1200 Stop 1215
1088	60		Andesite with fragments, strongly altered, calcite stringers/replacement.	100%	Run 15 Box 7 59.3 64.3	100%		Start 1220 Stop 1250
1086	62						40	
1084	64						30	
1082	66		Andesite, strongly altered (mafic minerals to ch, calcite/chlorite stringers, pyrite).	100%	Run 16 Box 7 64.3 69.3	94%	20	Start 1255 Stop 1315
1080	68						20 35 0	
1078	70		Andesite, strongly chloritized.	100%	Run 17 Box 8 69.3	68%		Start 1335 Stop 1350

DRILLING LOG

DIVISION: Seattle District

INSTALLATION: Howard Hanson Dam

SHEET 6 OF 9 SHEETS

1. PROJECT: Site Exploration
2. LOCATION (Coordinates or Station): Howard Hanson Dam
3. DRILLING AGENCY: Gregory Drilling
4. HOLE NO. (As shown on drawing title and file number): 04-DD-255
5. NAME OF DRILLER: Chris Gregory
6. DIRECTION OF HOLE: [X] VERTICAL [ ] INCLINED _____ DEG. FROM VERT.
7. THICKNESS OF OVERBURDEN: 0
8. DEPTH DRILLED INTO ROCK: 115.75
9. TOTAL DEPTH OF HOLE: 115.8
10. SIZE AND TYPE OF BIT: HQ-3
11. DATUM FOR ELEVATION SHOWN (TBM or MSL): MSL
12. MANUFACTURES'S DESIGNATION OF DRILL: CME 850
13. TOTAL NO. OF OVER-BURDEN SAMPLES TAKEN: DISTURBED _____ UNDISTURBED _____
14. TOTAL NUMBER CORE BOXES: 12
15. ELEVATION GROUND WATER: _____
16. DATE HOLE: STARTED 13 July 04 COMPLETED 15 July 04
17. ELEVATION TOP OF HOLE: 1148.0
18. TOTAL CORE RECOVERY FOR BORING: 98 %
19. SIGNATURE OF INSPECTOR: Tom Danielson

ELEVATION a	DEPTH b	LEGEND c	CLASSIFICATION OF MATERIALS (Description) d	% CORE RECOV-ERY e	BOX OR SAMPLE NO. f	RQD g	FRAC-TURES h	REMARKS (Drilling time, water loss, depth weathering, etc., if significant) i
					74.3			
1076	72						40 35 70 50 60 55 55 65	
1074	74		Andesite with strong alteration; Ch, Fe, Ca.	100%	Run 18 Box 8 74.3 79.3	53%	70 65 20 70 70	Start 1400 Stop
1072	76							
1070	78						50 0 0 30	
1068	80		Andesite, strong alteration, purple and green, calcite stringers.	94%	Run 20 Box 9 79.3 84.3	60%	25 10 25 25 25 25	15 July 04 Start 0610 Stop 0640
1066	82						20	
1064	84		Incipient fractures which came apart with transfer to core box.					

DRILLING LOG

DIVISION: Seattle District

INSTALLATION: Howard Hanson Dam

SHEET 7 OF 9 SHEETS

1. PROJECT: Site Exploration
2. LOCATION (Coordinates or Station): Howard Hanson Dam
3. DRILLING AGENCY: Gregory Drilling
4. HOLE NO. (As shown on drawing title and file number): 04-DD-255
5. NAME OF DRILLER: Chris Gregory
6. DIRECTION OF HOLE: [X] VERTICAL [ ] INCLINED _____ DEG. FROM VERT.
7. THICKNESS OF OVERBURDEN: 0
8. DEPTH DRILLED INTO ROCK: 115.75
9. TOTAL DEPTH OF HOLE: 115.8
10. SIZE AND TYPE OF BIT: HQ-3
11. DATUM FOR ELEVATION SHOWN (TBM or MSL): MSL
12. MANUFACTURES'S DESIGNATION OF DRILL: CME 850
13. TOTAL NO. OF OVER-BURDEN SAMPLES TAKEN: DISTURBED: _____ UNDISTURBED: _____
14. TOTAL NUMBER CORE BOXES: 12
15. ELEVATION GROUND WATER: _____
16. DATE HOLE: STARTED 13 July 04 COMPLETED 15 July 04
17. ELEVATION TOP OF HOLE: 1148.0
18. TOTAL CORE RECOVERY FOR BORING: 98 %
19. SIGNATURE OF INSPECTOR: Tom Danielson

ELEVATION a	DEPTH b	LEGEND c	CLASSIFICATION OF MATERIALS (Description) d	% CORE RECOV-ERY e	BOX OR SAMPLE NO. f	RQD g	FRAC-TURES h	REMARKS (Drilling time, water loss, depth weathering, etc., if significant) i
			Andesite becomes finer, loses purple hue in the finer material.	100%	Run 21 Box 9 84.3 89.3	80%	25 30	Start 0945 Stop 0710
1062	86						25	
1060	88						25 25 25 55	
1058	90		Back into coarser Andesite with fragments.	100%	Run 22 Box 10 89.3 94.3	94%	35 35 0	Start 0715 Stop 0740
1056	92						25	
1054	94						35 25	
			Andesite, finer grained.	100%	Run 23 Box 10 94.3 99.3	54%	30 40	Start 0745 Stop 0815
1052	96						30 65 60	
1050	98						65 40 70	

DRILLING LOG

DIVISION: Seattle District

INSTALLATION: Howard Hanson Dam

SHEET 8 OF 9 SHEETS

1. PROJECT: Site Exploration
2. LOCATION (Coordinates or Station): Howard Hanson Dam
3. DRILLING AGENCY: Gregory Drilling
4. HOLE NO. (As shown on drawing title and file number): 04-DD-255
5. NAME OF DRILLER: Chris Gregory
6. DIRECTION OF HOLE: [X] VERTICAL [ ] INCLINED _____ DEG. FROM VERT.
7. THICKNESS OF OVERBURDEN: 0
8. DEPTH DRILLED INTO ROCK: 115.75
9. TOTAL DEPTH OF HOLE: 115.8
10. SIZE AND TYPE OF BIT: HQ-3
11. DATUM FOR ELEVATION SHOWN (TBM or MSL): MSL
12. MANUFACTURES'S DESIGNATION OF DRILL: CME 850
13. TOTAL NO. OF OVER-BURDEN SAMPLES TAKEN: DISTURBED _____ UNDISTURBED _____
14. TOTAL NUMBER CORE BOXES: 12
15. ELEVATION GROUND WATER: _____
16. DATE HOLE: STARTED 13 July 04 COMPLETED 15 July 04
17. ELEVATION TOP OF HOLE: 1148.0
18. TOTAL CORE RECOVERY FOR BORING: 98 %
19. SIGNATURE OF INSPECTOR: Tom Danielson

ELEVATION a	DEPTH b	LEGEND c	CLASSIFICATION OF MATERIALS (Description) d	% CORE RECOV-ERY e	BOX OR SAMPLE NO. f	RQD g	FRAC-TURES h	REMARKS (Drilling time, water loss, depth weathering, etc., if significant) i
							55 30 30	
1048	100		Dark green andesite, extensive chlorite replacement; extensive calcite/ chlorite annealed fractures with iron staining.	100%	Run 24 Box 11 99.3 104.3	94%	15	Start 0820 Stop 0840
1046	102		(A number of fractures developed while placing core in box.)				50 20 45	
1044	104						20	
			Andesite, finer grained, same multiple annealed fractures as run #24.	100%	Run 25 Box 11 104.3 109.3	100%		Start 0850 Stop 0915
1042	106							
			Intact run - extensive breaks while fitting to box.					
1040	108							
			Andesite, fine grained, moderate to high alteration.	100%	Run 26 Box 12 109.3 114.3	76%	45 15 5 30	Start 0920 Stop 0945
1038	110							
1036	112							

DRILLING LOG

DIVISION: Seattle District

INSTALLATION: Howard Hanson Dam

SHEET 9 OF 9 SHEETS

1. PROJECT: Site Exploration
2. LOCATION (Coordinates or Station): Howard Hanson Dam
3. DRILLING AGENCY: Gregory Drilling
4. HOLE NO. (As shown on drawing title and file number): 04-DD-255
5. NAME OF DRILLER: Chris Gregory
6. DIRECTION OF HOLE: [X] VERTICAL [ ] INCLINED _____ DEG. FROM VERT.
7. THICKNESS OF OVERBURDEN: 0
8. DEPTH DRILLED INTO ROCK: 115.75
9. TOTAL DEPTH OF HOLE: 115.8
10. SIZE AND TYPE OF BIT: HQ-3
11. DATUM FOR ELEVATION SHOWN (TBM or MSL): MSL
12. MANUFACTURES'S DESIGNATION OF DRILL: CME 850
13. TOTAL NO. OF OVER-BURDEN SAMPLES TAKEN: DISTURBED: UNDISTURBED:
14. TOTAL NUMBER CORE BOXES: 12
15. ELEVATION GROUND WATER:
16. DATE HOLE: STARTED 13 July 04 COMPLETED 15 July 04
17. ELEVATION TOP OF HOLE: 1148.0
18. TOTAL CORE RECOVERY FOR BORING: 98 %
19. SIGNATURE OF INSPECTOR: Tom Danielson

ELEVATION a	DEPTH b	LEGEND c	CLASSIFICATION OF MATERIALS (Description) d	% CORE RECOV-ERY e	BOX OR SAMPLE NO. f	RQD g	FRAC-TURES h	REMARKS (Drilling time, water loss, depth weathering, etc., if significant) i
							25	
							30	
1034	114						30	
			Andesite, altered.	100%	Run 27 Box 12 114.3 115.8	67%	70	Start 1015 Stop 1035
			Calcite filled vein preventing fracture, up to 1cm.				30	
			Bottom of Hole at 115.75' bgs.					